Appendix C

Mechanical Equipment Vendor Data

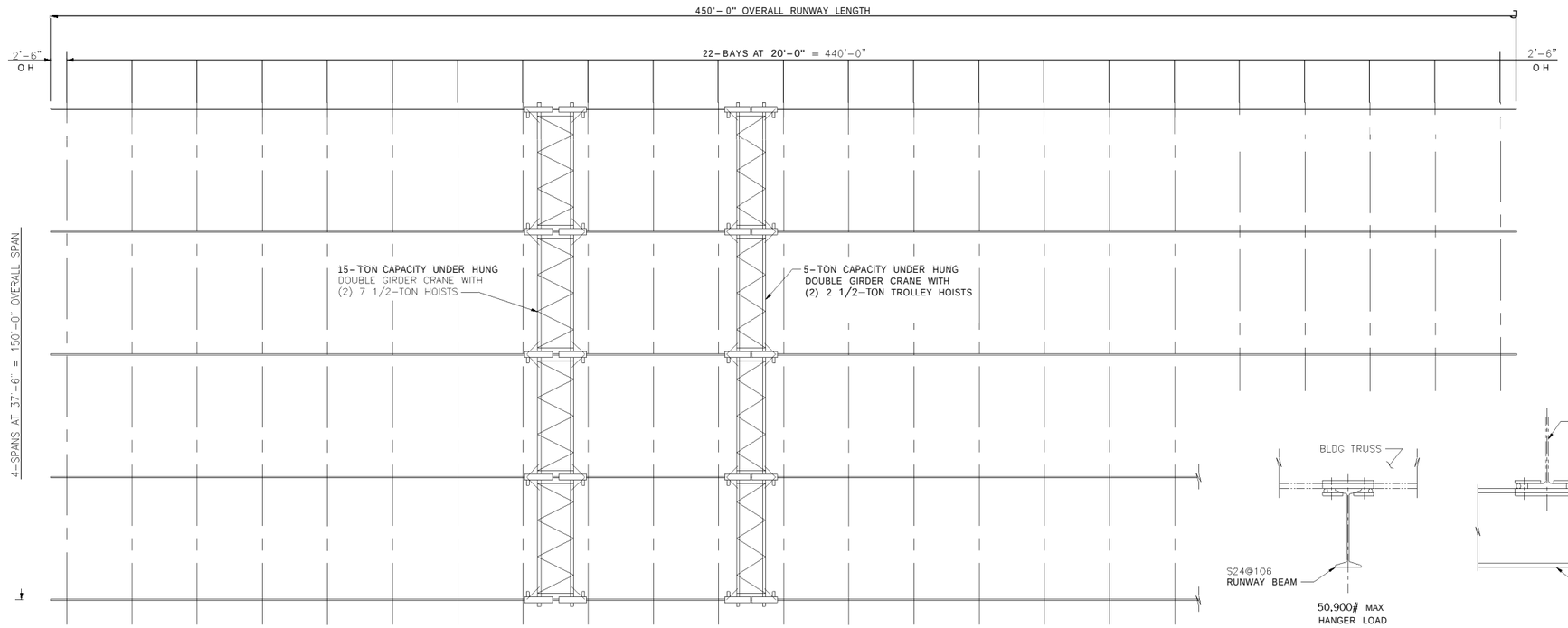

PLAN VIEW

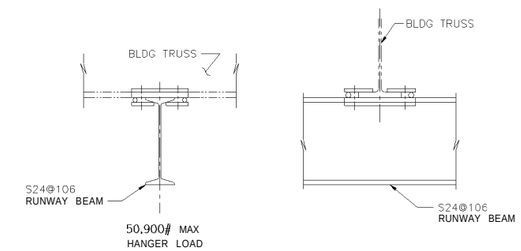

RUNWAY FLUSH CLAMP DETAIL

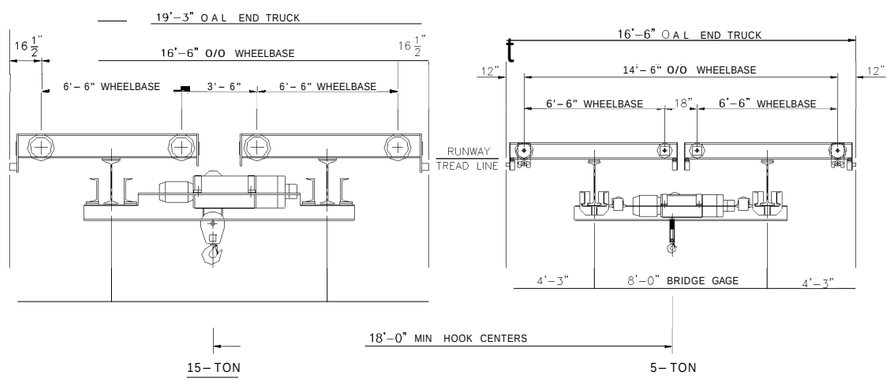

FND VIFW OF CRANFS

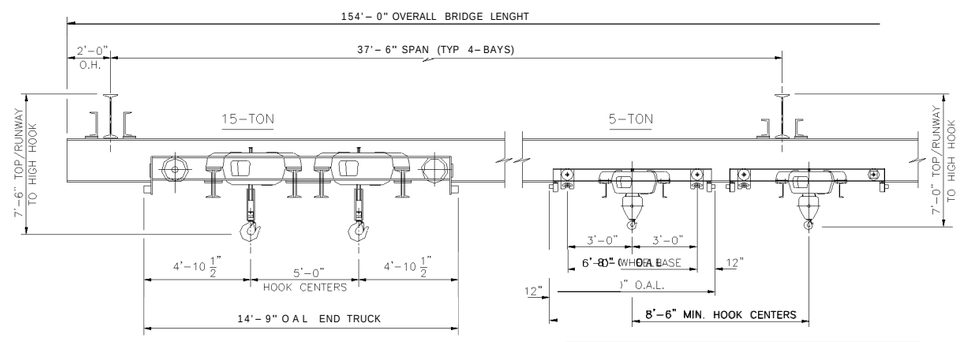

ELEVATION VIEW OF CRANES

REV NO	REVISION DESCRIPTION	REVISED BY	DATE

THIS DRAWING CONTAINS CONFIDENTIAL INFORMATION AND IS THE PROPERTY OF PROGRESSIVE CRANE INC. AND IS NOT TO BE USED IN ANY MANNER DETRIMENTAL TO THE INTERESTS OF PROGRESSIVE CRANE INCORPORATED

	NAME	DATE	SCALE
DRAWN	RA LOWE	05/02/03	1/16"=1'-0"
CHECKED			

PROGRESSIVE CRANE, INC.
13721 BENNINGTON AVENUE
CLEVELAND, OHIO 44135
(216) 251-6126

DERIVED FROM:

TITLE: 15-TON & 5-TON UHDG CRANES RUNWAY LAYOUT & ELEVATIONS RUST ENGINEERING

DWG. NO. P-042803

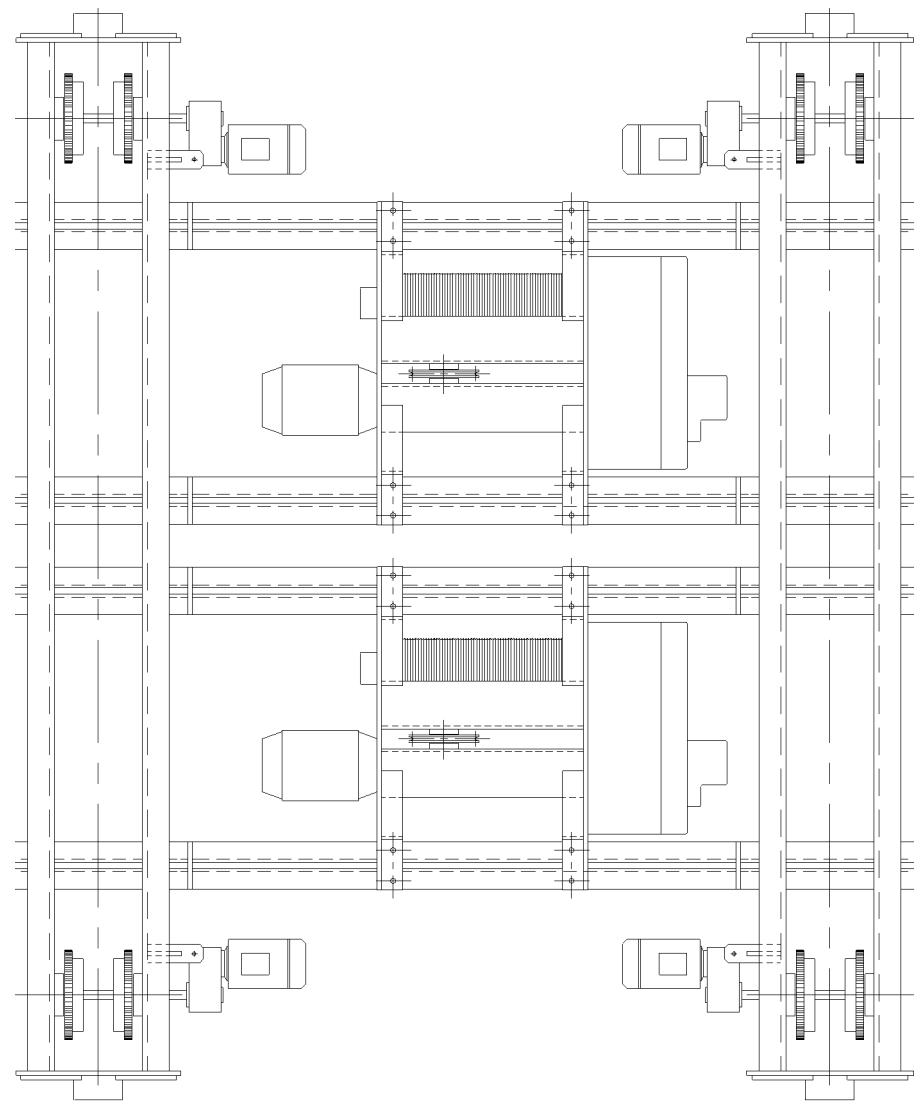

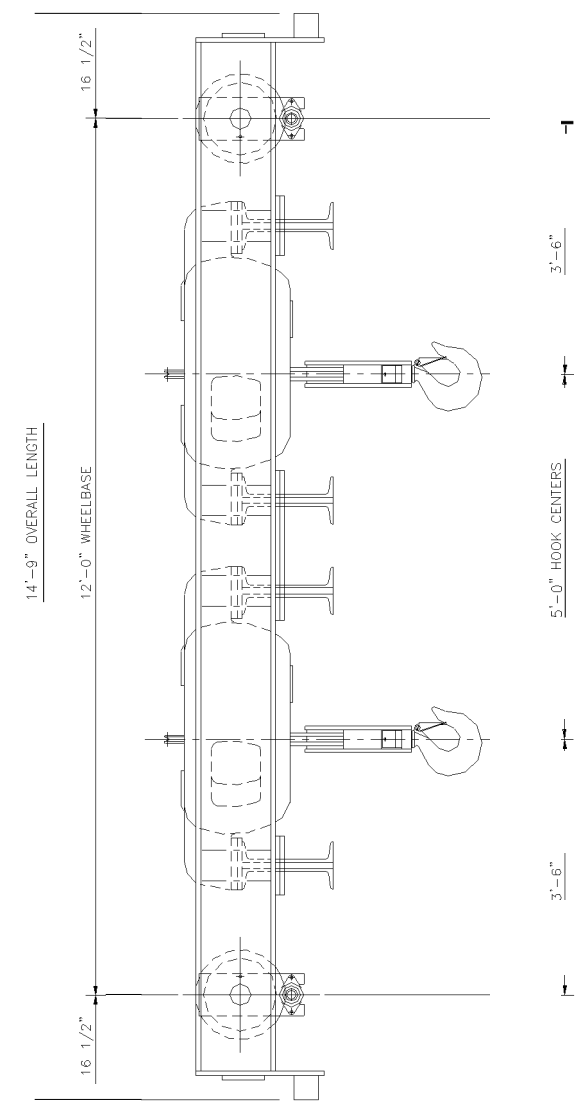

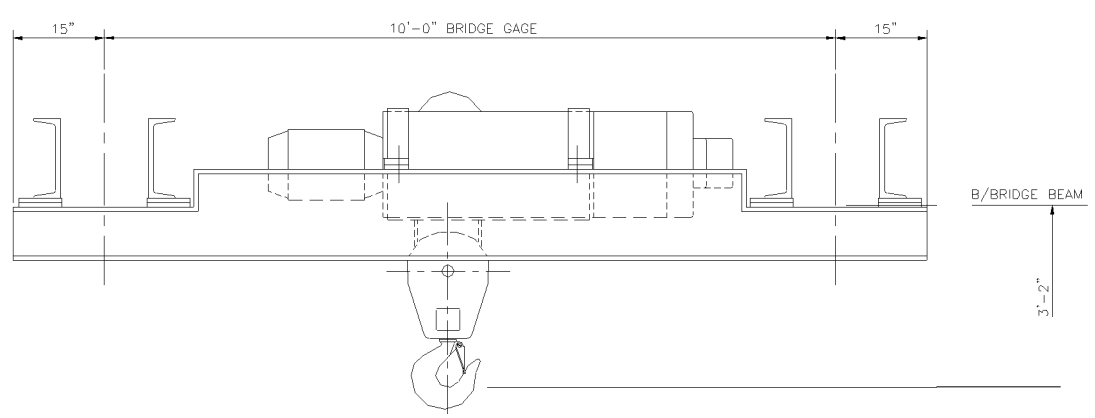

THIS DRAWING CONTAINS CONFIDENTIAL INFORMATION AND IS THE PROPERTY OF PROGRESSIVE CRANE INC. ND IS NOT TO BE USED IN A MANNER DETRIMENTAL TO THE INTERESTS OF PROGRESSIVE CRANE INCORPORATED

REV NO.	REVISION DESCRIPTION	REVISED BY	DATE
2			
1			

	NAME	DATE	SCALE
DRAWN	RA LOWE	05/02/03	1"= 1'-0"
CHECKED			

PROGRESSIVE CRANE, INC.
13721 BENNINGTON AVENUE
CLEVELAND, OHIO 44135
(216) 251-6126

DERIVED FROM:

TITLE: 15-TON CAPACITY TROLLEY W/(2) 7 1/2-TON HOISTS RUST ENGINEERING

DWG. NO. P-042903-B

GRADALL

XL 5200

HYDRAULIC EXCAVATOR

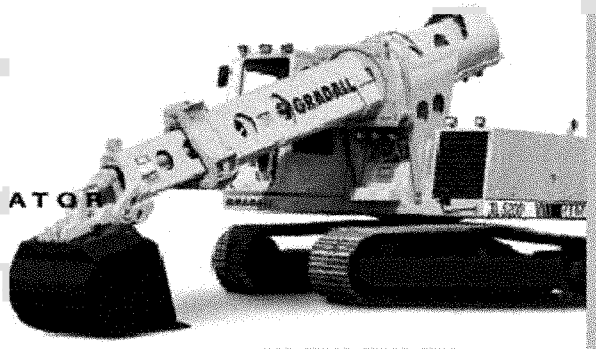

XL 5200

SPECIFICATIONS

Upperstructure Engine

Cummins 6BTA5.9 diesel, turbocharged and aftercooled, liquid cooled, 4 cycle, 6 cylinder, 359 cid (5.9L), 4.02" bore x 4.72" stroke (102mm x 120mm), 17.4:1 compression ratio.

174 hp (131kW) max. gross at 2100 rpm, 165 hp (123kW) gross at engine gov. speed of 2200 rpm, 163 hp (122kW) net at 2100 rpm, 512 ft.-lb. (694Nm) gross torque at 1500 rpm.

Altitude capability 10,000' (3050m). Derate 4% per 1000' (305m) above 10,000' (3050m).

Maximum slope: 45°

12 volt starter, 105 amp alternator, two SAE #C31-S 810 CCA batteries, two-stage dry type air cleaner with centrifugal precleaner, ejector valve and service indicator, spin-on oil filter, spin-on fuel filter/water separator.

Fuel tank capacity: 86 gallons (326L)

Hydraulic System

PUMPS

Main Two load-sensing axial piston pumps; 0-60 GPM (0-227 L/min) each

Swing Axial piston pump; 0-16 GPM (0-61 L/min).

Auxiliary Tandem gear pump for pilot control and cooling circuits; 20.6 GPM (78 L/min).

SYSTEM MONITOR

Electronic monitor in cab indicates low hydraulic fluid level, high hydraulic fluid temperature, and condition of return and suction filters.

SYSTEM SPECIFICATIONS

Four double acting cylinders

- 2 boom hoist: 4.75" ID, 3.25" rod (121mm x 83mm), 36.25" (921 mm) stroke.
- 1 tool: 5" ID, 3.25" rod (127mm x 83mm), 25.3" (643mm) stroke.
- 1 telescope: 4" ID, 2.75" rod (102mm x 70mm), 14' (4.27m) stroke.

Four hydraulic motors
Swing, 54 hp (40kW); tilt, 28 hp (21kW); two crawler drives, 97 hp (72kW) each.

Operating pressures

Hoist	4300 psi (29,627kPa)
Tilt	3000 psi (20,670kPa)
Swing	5800 psi (39,962kPa)
Tool	4300 psi (29,627kPa)
Telescope	3500 psi (24,115kPa)
Crawler	4200 psi (28,965kPa)
Pilot system	480 psi (3,307kPa)

Rated bucket breakout force:
21,900 lbs. (97.5kN)

Rated boom force:
23,340 lbs. (103.9 kN)

Oil capacity
Reservoir 75 gallons (284L), system 100 gallons (379L). Pressurized reservoir with visual oil level gauges.

Filtration system
Combination of 8 micron and 10 micron in-line suction and return filters, plus 10 micron return filter, magnet and 100 mesh strainer in reservoir.

Fin and tube-type oil cooler, with thermal by-pass and relief valves.

Pressure compensated load-sensing valves with circuit relefs in all valves.

Upperstructure Cab

All-weather cab with tinted safety glass windows, skylight, acoustical lining, four-way adjustable operator's seat, filtered fresh air heater and defroster. Front window slides to overhead storage. Mirrors located on both sides of machine.

CONTROLS
Two hydraulic joysticks (hoist & bucket, telescope & swing), one rocker switch (tilt) control uppersructure. Hydraulic joysticks mounted on arm rests, independently adjustable for individual operator comfort and convenience.

Two foot pedals/handles control crawler steering, travel and brakes; toggle switch for selection of crawler speed range.

Joysticks and pedals are self-centering; when controls are released, power for movement disengages and swing and crawler brakes set automatically.

Engine controls
Key operated ignition/starter switch, throttle, hour meter and air cleaner condition indicator. Electronic monitor indicates fuel level, low battery charge, coolant level and lube oil pressure, high coolant temperature, and engine rpm.

Swing

Independent closed loop swing circuit with axial piston pump and motor. Planetary transmission.

Swing speed: 6.1 rpm.

Swing brake
Automatic swing parking brake, spring-set hydraulic release. Dynamic braking provided by hydraulic system.

Undercarriage

Tractor type crawler with triple grouser heavy-duty pads. Sealed track links, lubricated and sealed idlers and rollers, hydraulic track tension adjustment, bolt on track guides, motor and hose guards, front and rear tow eyes.

Track length: 13.3' (4m)
Track pads: 23.6" (600mm) or 31.5" (800mm)
Overall width: 9'6" (2.9m) with 23.6" (600mm) pads. 10.2' (3.1m) with 31.5" (800mm) pads.
Ground clearance: 19" (483mm)

Crawler Drive

Dual range high torque piston motor, 97 hp (72kW), powers each track. Three stage planetary drive with integral speed limiting valve and automatic spring-set hydraulic release wet disc parking brake.

Travel speed on flat, level surface–mph (km/hr).

Speed Selector	
High	0-2.2 (0-3.5)
Low	0-1.4 (0-2.2)

Travel speed range can be shifted while moving.

Gradeability: 100%, limited by engine lubrication requirements.

Drawbar pull: 39,900 lbs. (178kN)

Individual track control. Tracks counter-rotate to pivot machine around on centerline.

Electronically operated travel alarm mounted in counterweight area signals crawler movement in either direction.

Weight

Approximate working weight with 48" (1.22m) bucket, fuel tank half full:

	23.6" Pads (600mm)	31.5" Pads (800mm)
Weight	52,760 lb. (23,930 kg)	53,860 lb. (24,440 kg)
Bearing Pressure	8.1 psi (.57 kg/cm²)	6.2 psi (.43 kg/cm²)

GRADALL XL 5200 CRAWLER RATED LIFT CAPACITY OVER SIDE OR END-LB. (KG)

LOAD POINT HEIGHT		LOAD RADIUS						
		Minimum Radius	10' (3.0m)	15' (4.6m)	20' (6.1m)	25' (7.6m)	30' (9.1m)	Maximum Radius
Above Ground Level	20' (6.1m)	6570 @ 21'2" (2980 @ 6.5m)				5205 (2361)		4610 @ 27'0" (2091 @ 8.2m)
	15' (4.6 m)	13715 @ 13'9" (6221 @ 4.2m)		12165 (5519)	8495 (3853)	6055 (2751)		4630 @ 29'3" (2100 @ 8.9m)
	10' (3.0)	13235 @ 16'3" (6003 @ 5.0m)			9685 (4393)	6755 (3064)	4850 (2200)	4735 @ 30'4" (2148 @ 9.2m)
	Boom Level 8'6" (2.6m)	13235 @ 16'7" (6003 @ 5.1m)			9935 (4507)	6900 (3130)	4945 (2243)	4775 @ 30'7" (2166 @ 9.3m)
	5' (1.5m)	13385 @ 16'8" (6071 @ 5.1m)			10205 (4629)	7095 (3218)	5090 (2309)	4890 @ 30'7" (2218 @ 9.3m)
At Ground Level		13620 @ 15'6" (6178 @ 4.7m)			9795 (4443)	6995 (3173)	5085 (2307)	5085 @ 30'0" (2307 @ 9.1m)
Below Ground Level	5' (1.5m)	12820 @ 11'10" (5190 @ 3.6m)		11370 (5157)	8575 (3935)	6490 (2944)		5310 @ 28'5" (2409 @ 8.7m)
	10' (3m)	5135 @ 7'2" (2329 @ 2.2m)	8425 (3822)	8710 (3951)	7275 (3300)	5735 (2601)		5525 @ 25'9" (2506 @ 7.8m)
	15' (4.6m)	3840 @ 8'1" (1742 @ 2.5m)	5520 (2504)	6540 (2967)	5895 (2674)			5615 @ 21'5" (2547 @ 6.5m)
	20' (6.1m)	2820 @ 8'11" (1279 @ 2.7m)	3565 (1618)					4770 @ 14'1" (2164 @ 4.3m)

CAUTION: All rated loads are based on the machine being stationary and level on a firm supporting surface. For safe working loads, the user is expected to make due allowance for his particular job conditions, such as soft or uneven ground, out of level conditions, side loads, hazardous conditions, experience of personnel, etc. The operator and other personnel should fully acquaint themselves with the Operator's Manual furnished by the manufacturer before operating this machine, and rules for safe operation of equipment should be adhered to at all times.

All loads shown are limited by hydraulic lift capacity rather than stability.

Loads are in compliance with SAE Standard J-1097 NOV 88. They do not exceed 87% of hydraulic lifting capacity or 75% of tipping capacity.

The rated lift capacity is based on the machine being equipped with 7000 lb. (3175kg) counterweight, standard 23.6" (600mm) or 31.5" (800mm) pads, and 8095-6001 48" (122cm) excavating bucket weighing 1290 lbs. (585kg). For other buckets adjust the listed capacities as follows:

8095-6002 72" (1.83m) ditching – subtract 90 lbs (41kg)
8095-6006 72" (1.83m) ditching – add 5 lbs (2kg)
8095-6003 48" (1.22m) pavement removal – subtract 170 lbs (77kg)
8095-6005 36" (910mm) excavating – add 250 lbs (113kg)
8095-6004 28" (710mm) excavating – add 410 lbs (186kg)

The load point is located on the bucket pivot point, including loads listed for maximum radius.

Do not attempt to lift or hold any load greater than these rated values at specified load radii and heights. The weight of slings and any auxiliary lifting devices must be deducted from the rated load to determine the net load that may be lifted.

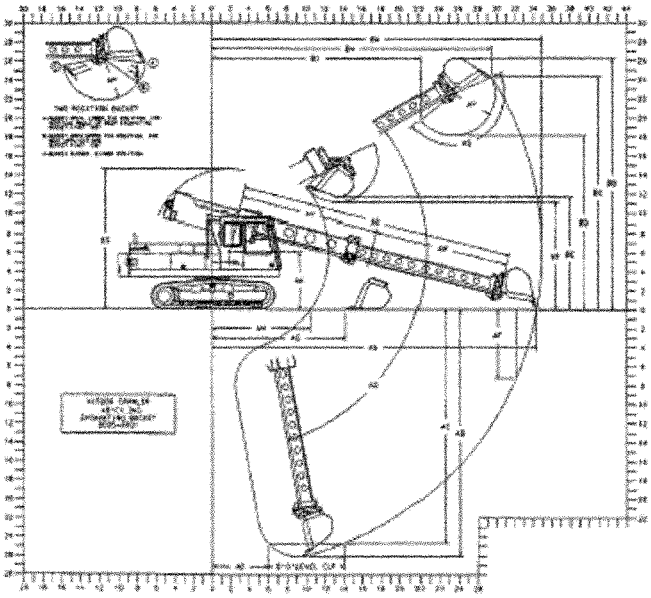

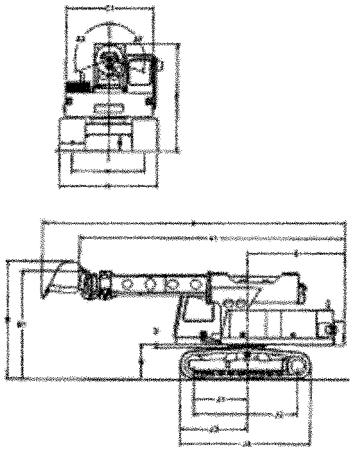

Shown with 8095-6001 48" (1.22m) excavating bucket
Metric units m unless otherwise noted.

A Overall length with bucket: 30'10" (9.4)
A1 Overall length without bucket: 27'1" (8.2)
B Overall height with bucket: 11'10" (3.6)
B1 Overall height without bucket: 10'10" (3.3)
C1 Width of upperstructure: 9'0" (2.7)
D Minimum clearance, upperstructure to undercarriage: 4" (102mm)
E Swing clearance, rear of upperstructure: 10'0" (3.0)
F Top of cradle to groundline: 10'10" (3.3)
G Clearance, upperstructure to groundline: 42" (1.1)
J1 Axis of rotation to centerline of drive sprockets: 5'3" (1.6)
J2 Nominal distance between centerlines of drive sprockets and idlers: 10'5" (3.2)
J3 Axis of rotation to end of track assembly: 6'8" (2.0)
J4 Nominal overall length of track assembly: 13'3" (4.0)
K Width of crawler with 23.6" (600mm) pads: 9'6" (2.9)
Width of crawler with 31.5" (800mm) pads: 10'2" (3.1)
N Ground clearance (per SAE J1234): 19" (483mm)
V Track gage, roller centerline to roller centerline: 7'6" (2.3)
Y Width of crawler track assembly: 31.5" (800mm)
AA Maximum radius at groundline (165° pivot): 34'4" (10.5)
AB Maximum digging depth (165° pivot) – end: 26'1" (79)
AC Maximum depth for 8' level cut – end: 24'8" (7.5)
AD Minimum radius of 8' level cut at depth "AC" – end: 6'0" (1.8)
AF Maximum depth of vertical wall which can be excavated: 7'3" (2.2)
AG Minimum level cut radius with bucket flat on groundline: 14'2" (4.3)
AH Minimum radius at groundline: 10'5" (3.2)
AK Boom pivot to groundline: 6'1" (1.8)
AL Boom pivot to axis of rotation: 22.5" (571mm)
AP Bucket tooth radius: 52" (1.3)
AQ Boom pivot angle: 30° Up & 80° Down
AS Bucket pivot angle: 135° & 165°
AU Maximum telescoping boom length (boom pivot to bucket pivot): 28'8" (8.7)
AV Minimum telescoping boom length (boom pivot to bucket pivot): 14'8" (4.5)
AW Telescoping boom travel: 14'0" (4.3)
AX Boom tilt angle (both sides of center): 110°
BA Maximum radius of working equipment (165° pivot): 34'11" (10.6)
BB Maximum height of working equipment: 26'4" (8.0)
BC Maximum bucket tooth height: 24'4" (7.4)
BD Minimum clearance of bucket teeth with bucket pivot at maximum height: 18'2" (5.5)
BE Minimum clearance of fully curled bucket at maximum boom height (165° pivot): 11'9" (3.6)
BF Minimum clearance of bucket teeth at maximum boom height: 11'2" (3.4)
BG Maximum height of working equipment with bucket below groundline: 14'8" (4.5)
BH Radius of bucket teeth at maximum height (165° pivot): 29'5" (9.0)
BJ Minimum radius of bucket teeth at maximum bucket pivot height (165° pivot): 22'1" (6.7)

Transport dimensions without attachment
Length: 27'1" (8.2)
Height: 10'10" (3.3)
Width: on 23.6" (600mm) pads - 9'6" (2.9)
on 31.5" (800mm) pads - 10'2" (3.1)

Units shown may have optional equipment

Optional Equipment

Work lights: 2 floodlights on boom cradle, 4 floodlights on uppestructure cab, 2 floodlights on left front uppestructure shrouding.

Windshield washer and wiper.

Vandalism protection kit: Lexan cab windows, locking reservoir cap and sight gauge cover.

Spark arrestor.

Revolving beacon.

Cold start package for engine: includes ether start kit and additional battery.

Air conditioning.

Inside hose trough with additional hosing and piping for pneumatic or hydraulic powered attachments.

360° continuous boom tilt.

Telestick attachment.

Blank attachment adaptor.

It is Gradall Policy to continually improve its products. Therefore designs, materials and specifications are subject to change without notice and without incurring any liability on units already sold. Units shown may have optional equipment.

GRADALL
A JLG COMPANY
406 Mill Ave. SW, New Philadelphia, Ohio 44663
Phone (330) 339-2211 FAX (330) 339-8468
http://www.gradall.com

Certified ISO 9001

Form No. 19823 6/99
Replaces Form No. 19707

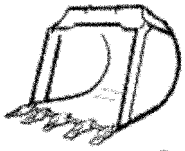

	Cu yd.	m3
8095-6024 15" (381mm) Excavating bucket	¼	.19
8095-6004 28" (710mm) Excavating bucket	5/8	.47
8095-6005 36" (914mm) Excavating bucket	7/8	.66
8095-6001 48" (1.22m) Excavating bucket	1-1/4	.96

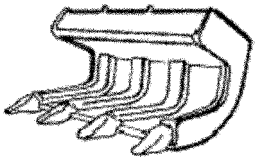

8095-6003 48" (1.22m) Pavement removal bucket

8095-6017 60" (1.52m) Rock bucket	1⅜	1.04

	Cu yd.	m3
8095-6025 24" (610mm) Ditching bucket	½	.38
8095-6036 66" (1.68m) Ditching bucket	1-½	1.14
8095-6002 72" (1.83m) Ditching bucket	1-3/4	1.34
8095-6006 72" (1.83m) Ditching bucket with continuous radius	1-7/16	1.09

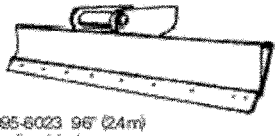

8095-6023 96" (2.4m) Grading blade

8095-6009 Single-tooth ripper

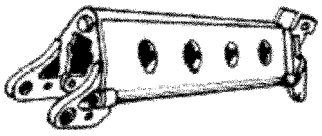

8095-5012 6' (1.8m) Boom extension
8095-5013 8' (2.4m) Boom extension
8065-5014 12' (3.7m) Boom extension

Telestick package provides 50'4" (15.3m) surface reach – contact factory for details.

ATTACHMENTS
Buckets fabricated of steel plate, with high strength, low alloy cutting edges and wear strips. Standard attachments available for wide range of applications. Capacities shown are SAE heaped. All digging attachments are reversible.

TWO POSITION BUCKET

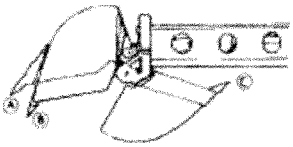

A - Bucket open, lower pin position, for vertical walls or deep excavating. Bucket pivot 165°.

B - Bucket open, upper pin position, for most applications. Bucket pivot 135°.

C - Bucket closed, either pin position.

Printed in USA

DCL International Inc.
P.O. Box 90,
Concord, ON, Canada
L4K 1B2

Phone: +1-905-660-6450
toll-free: 1-800-872-1968
Fax: +1-905-660-6435
web-site: www.dcl-inc.com

DCL International Inc.

Product Information: DCL Active Diesel Particulate Filter Systems

Product Information for

DCL Active Diesel Particulate Filter Systems:

DCL BlueSky™ Sootfilter System

&

DCL Titan™ Sootfilter System

DCL BlueSky™ Sootfilter System

Description:

Passive Sootfilter System with active support for heavy-duty vehicles. This system combines both the convenience of a catalyzed sootfilter for passive regeneration during high exhaust temperature periods with the safety back up of active regeneration capability for duty cycles that don't allow for passive regeneration. Hence, the performance of this diesel particulate sootfilter system becomes independent of the vehicle's duty cycle. Furthermore, sulfur level of fuel and lube oil are not decisive for proper performance. The system is also available as purely passive system with the option to retrofit the active support, if needed. Here, as with any purely passive system, sulfur levels are influencing application feasibility. Additionally, the system is available as purely active system with a sootfilter that is not catalyzed.

During the duty cycle periods that don't allow for or don't support enough passive regeneration, the sootfilter collects the soot and eventually reaches a filling level, hence exhaust backpressure level, at which it has to be regenerated. An exhaust backpressure monitor that is mounted to the vehicle dashboard indicates the need for active regeneration to the operator. The active system is based upon supplying electrically generated heat and compressed air for soot combustion. The regeneration takes place during vehicle standstill. The supplied regeneration control system has to be connected to the particulate sootfilter assembly that remains on the vehicle and to power and air outlet on costumer's site.

Features:

The system comprises of three parts:

1. Sootfilter assembly
   a. Catalyzed or un-catalyzed silicon carbide sootfilter substrate
   b. Heater spiral insert; heater spiral is exchangeable
   c. Interface to regeneration control system connection
2. Regeneration control system
   a. Regeneration process control
   b. Interface to heater insert connection
   c. Interface to mains power and air supply
3. Engine exhaust backpressure monitor

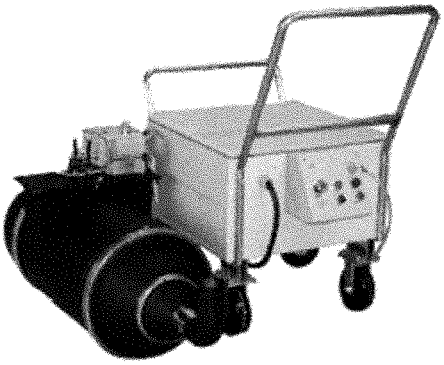

Sootfilter Assembly and Regeneration Control Cart

Benefits:

- Performs with ANY fuel and lube oil sulphur level.
- Performs with new and old engines.
- Performs independent of exhaust temperatures and vehicle duty cycle.
- Reduces diesel emissions (carbonaceous and soluble fraction):
  - particulate number more than 99% (PZAG) and mass 87% (PMAG) [As per VERT certification testing B078.]
    - If sootfilter is catalyzed:
      - carbon monoxide up to 95%
      - hydrocarbons up to 80%
- Replaces muffler and catalyst, adding soot filtration benefits.
- Monitors engine backpressure and indicates backpressure limit, hence protects engine against excessive backpressure built-up during operation. This also prevents the filter from being overloaded with soot and consequently reduces chances of uncontrolled run-away passive regeneration.
- Promotes safe and controlled soot regeneration through exhaust backpressure monitoring and active regeneration under controlled conditions.
- Allows for regular and thorough on-board cleaning of the sootfilter via active regeneration during regular vehicle maintenance shutdowns, consequently reduces sootfilter removals for cleaning.
- Promotes sootfilter longevity even under unfavourable operation conditions for utilizing a silicon carbide substrate with high mechanical strength and high thermal durability.

Specifications:

Required on Customer's Site:

Power Supply:	480 VAC – 4 pole; 2 phase, ground, earth
Protection:	30 A
Heater Wattage:	Max 8 kW (depending on system size)
Air Supply:	Compressed air 70 to 90PSI

System inherent:

Ground Fault Indication:	0-1 sec; 30- 300mA adjustable
Air Supply Connection:	¼" hose barb
Limiting Backpressure:	40" H2O (or as per customer request)
Vehicle Operation Time:	10 h (varies depending on vehicle duty cycle, backpressure limit and occurrence of passive regenerations)
Regeneration Time	2 h, to take place after each shift 3 h "maintenance" cycles (for additional cleaning)
Backpressure Indicator	12 or 24 VDC (as per customers request)

Product Information: DCL Active Diesel Particulate Filter Systems

Sizes Available:

Max. Engine Power Hp	A Overall Length Inch [mm]	B Overall Dia Inch [mm]	C Inlet / Outlet Pipe Dia Inch [mm]	D Height Heater Access Lid Inch [mm]	E Overall Height Inch [mm]	Weight Lb [kg]
220 - 350	40.3 1024]	17.7 [450]	As per application requirement	18.8 [448]	25.5 [648]	125 [57]
140 - 220	35.3 [897]	14.7 [373]		15.8 [401]	22.6 [574]	59 [27]
100 - 140	33.3 [846]	13.2 [335]		14.3 [363]	21.1 [536]	35 [16]

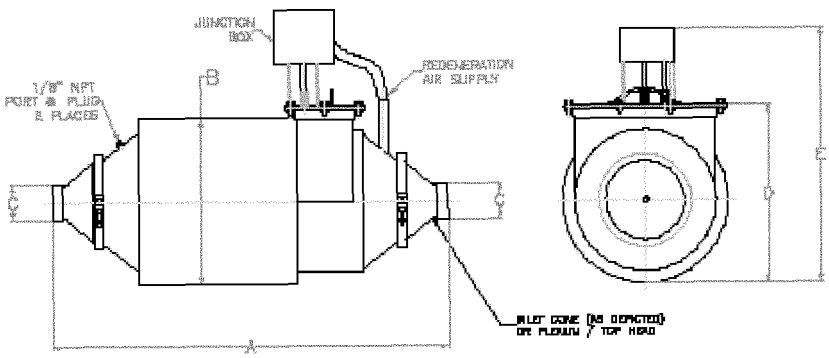

Operation:

Operation is very straightforward: The backpressure indicator indicates that the exhaust backpressure limit is reached and active regeneration is required. Or regeneration may be planned ahead per adequate schedule, e.g. after each shift. For regeneration of the sootfilter the vehicle may be driven to a dedicated area and the engine must be shut off. After the control system is connected to the vehicle and to mains supply, the regeneration system is ready to be started. Automatic controls and protections ensure that the process takes place without the need of being overseen.

Operation duration between active regenerations depends on e.g.:

- Exhaust temperature; the more passive regenerations take place the longer the interval.
- Engine soot production; the "dirtier" the engine, the shorter the interval.
- Backpressure indicator setting; the higher the backpressure limit is set to, the longer the interval. (There is some flexibility because this system is more tolerant to varying soot loads than passive systems.)

Maintenance:

The sootfilter requires regular maintenance, whereas the timing depends on engine maintenance. For a very badly maintained or worn out engine the sootfilter will have to be cleaned more often than recommended in the manual. Greatly reduced intervals between active sootfilter regeneration under the same vehicle duty conditions indicate that sootfilter maintenance cleaning is required. Cleaning may take place with the sootfilter on the vehicle, if the design allows for it. If not the sootfilter has to be taken off. In any case, the accumulated ashes that are plugging the sootfilter channels should be removed with compressed air blown into the sootfilter channels from the outlet face. (For details see manual).

Application:

The DCL BlueSky system has been designed for heavy-duty mining equipment. Hence, the system is very fit for any (rugged) off-road and on-road application that doesn't experience the exhaust temperatures required for purely passive sootfilter systems and has a duty routine that allows the vehicle to return to a specific location to perform active regeneration. There are no duty cycle, exhaust temperature or diesel fuel sulfur content restrictions.

The system has been evaluated during the DEEP program (Diesel emission evaluation program; stakeholders are CANMET, NIOSH, Canadian health org., mining companies, after treatment manufacturers e.g.) and was emission tested by NIOSH on a mine application in Nevada.

The system has been used e.g. on equipment such as LHDs with DDEC S 60 engines, and Supply Haulers with Cat 3306DITA and Deutz BF6M1013CP engines.

DCL Titan™ Sootsootfilter System

Description:

Active Sootfilter System for light and medium duty vehicles. The system's soot removal performance is independent of vehicle duty cycle, namely exhaust temperature, and fuel and lube oil sulfur levels. The sootfilter acts as soot collector eventually reaching a filling level, backpressure level respectively, at which it has to be actively regenerated. An exhaust backpressure monitor that is mounted to the vehicle dashboard indicates the need for active regeneration to the operator.

The active system is based on supplying electrically generated heat and compressed air for soot combustion. For regeneration the full sootfilter is taken off the vehicle and can be exchanged for a fresh (empty) sootfilter, if continuous vehicle operation is required. The full sootfilter is placed on a regeneration base that incorporates a control system. This control system has to be connected to power and air outlet on costumer's site.

Features:

The system comprises of three parts:

1. Sootfilter assembly
   a. Silicon carbide substrate, uncatalyzed (catalyzed upon request)
2. Regeneration control unit
   a. Regeneration process control
   b. Regeneration base including heat spiral
   c. Interface for connection to mains power and air supply.
3. Exhaust backpressure monitor

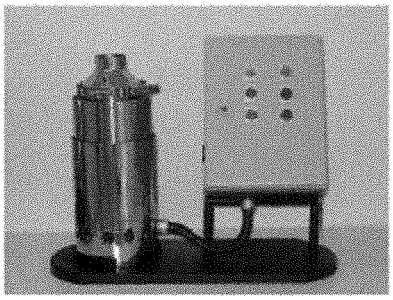

Titan Regeneration Control Unit with Sootfilter

Benefits:

- Performs with ANY fuel and lube oil sulphur level.
- Performs with new and old engines.
- Performs independent of exhaust temperatures and vehicle duty cycle.
- Reduces diesel emissions (carbonaceous and soluble fraction):
  - particulate number more than 99% (PZAG) and mass 87% (PMAG) [As per VERT certification testing B078].
- Replaces the muffler, adding soot filtration benefits.
- Allows for continuous vehicle operation through easy to exchange sootfilters.
- Monitors engine backpressure and indicates backpressure limit, hence protects engine against excessive backpressure built-up during operation.

- Promotes safe and controlled soot regeneration with active regeneration under controlled conditions.
- Promotes sootfilter longevity even under unfavourable operation conditions for utilizing a silicon carbide substrate with high mechanical strength and high thermal durability.

Specifications:

Required on Customer's Site:

Power supply:	120/240 VAC – 4 pole; 2 phase, neutral, ground
Protection:	20 A
Compressed air supply:	70 to 90PSI

System inherent:

Power Supply Cable Plug:	20 A; 4 Pole
Heater Wattage:	3.3 kW
Air Supply Connection:	¼" hose barb
Limiting backpressure:	50" H2O (adjustable to customer request)
Vehicle Operation Time:	Max. 8 h per sootfilter (varies depending on vehicle duty cycle)
Regeneration Time:	Between 1 and 4 hours, depending on filter size.
Backpressure Indicator:	12 or 24 VDC (as per customers request)

Sizes Available:

Max.* Engine Power kW	A Overall Dia Inch [mm]	B Overall Length Inch [mm]	D** Inlet Dia Inch [mm]	E Outlet Dia Inch [mm]	Weight Lb [kg]
Up to 35	8.1 [206]	13.7 [348]	2.0 [51] 3.0 [76]	4.0 [101]	16 [7]
35 - 60		17.7 [450]	4.0 [101]		22 [10]
60 - 80	13.0 [330]	23.0 [584]	5.0 [127]	6.0 [152]	25 [11]
80 - 100		27.0 [686]	6.0 [152]		28 [13]

* Sootfilters can be mounted in a twin configuration, thus doubling indicated engine power range. For example two 60kW sootfilters would cover a 120kW application.
**Alternatively to an inlet cone, a plenum is available.

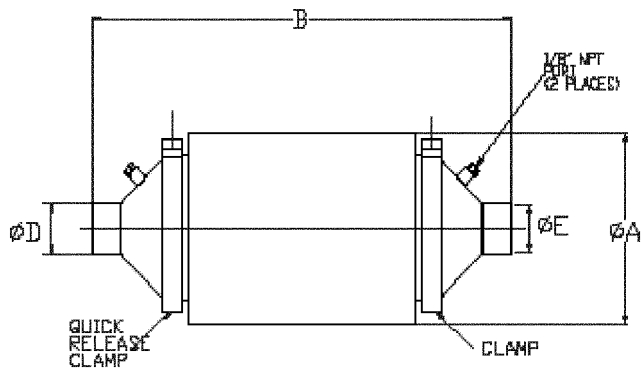

Operation:

Operation is very straightforward: The backpressure indicator indicates that active regeneration is required; or regeneration after each shift. The vehicle may be brought to the regeneration station where the full sootfilter will be exchanged or the sootfilter exchange may happen wherever convenient. The full sootfilter is put on the regeneration base and the control unit connected to mains supply. Then the regeneration system is ready to be started. Automatic controls and protections ensure that the process takes place without the need of being overseen.

Operation duration between active regenerations depends on e.g.:

- Engine soot production; the "dirtier" the engine, the shorter the interval.
- Backpressure indicator setting; the higher the backpressure limit is set to, the longer the interval.

Maintenance:

The sootfilter requires regular maintenance, whereas the timing depends on engine maintenance. For a very badly maintained or worn out engine the sootfilter will have to be cleaned more often than recommended in the manual. Greatly reduced intervals between active sootfilter regeneration under the same vehicle duty conditions indicate that sootfilter maintenance cleaning is required. The sootfilter has to be taken off for cleaning. The accumulated ashes that are plugging the sootfilter channels should be removed with compressed air blown into the sootfilter channels from the outlet face. (For details see manual).

Application:

The DCL Titan system has been designed for light to medium duty (below or at 100kW) construction or material handling equipment and small mining equipment. The system is very fit for any off-road and on-road application that doesn't experience the exhaust temperatures required for passive sootfilter systems. There are no duty cycle or exhaust temperature restrictions, neither limitations to fuel sulfur levels.

This system is being used in North America and Europe on e.g. forklifts, skid steers, mining equipment.

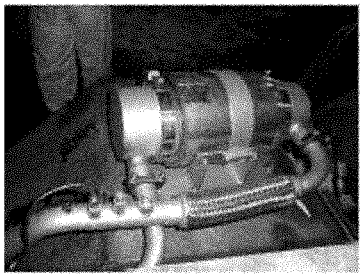

Kubota Tractor – Mining Equipment

JCB Skid Steer - Material Handling

Hyster Forklift-Material Handling

Further information on our products:

For further information, please contact us at:
www.dcl-inc.com
toll-free: 1-800-872-1968 or (905)-660-6450

or for technical advise:
Karen Schirmer; ph. (905)-660-6451 x 304; kschirmer@dcl-inc.com
Joe Alexio; ph. (905)-660-6450 x 227; jalexio@dcl-inc.com