RADCON TECHNICAL BASIS
TECHNICAL BASELINE (TBL)

TBL No.: TBL-194 TBL Rev. No.: 0 Project No.: NA

1. Title: EBR-II Pre-Demolition Source Term

2. Site Wide Application ☐ Facility/Project/Area ☒

3. (a) Affects Safety Basis: ☐ Yes ☒ No (b) Affects SNF/NNPP/HLW: ☐ Yes ☒ No

4. Summary:

The purpose of this TBL is to estimate the pre-demolition radionuclide source term associated with MFC-767, the EBR-II reactor building.

Based on the analysis documented in the TBL, the total source term associated with EBR-II (MFC-767) is 1.50E04 Ci. The predominate radionuclides contributing to this activity are mainly contained within the activated metal forming the reactor and include Ni-63 (~45%), Co-60 (~43%), and Fe-55 (~11%). Of this total source term, only 3.99E-03 Ci exists in the above grade regions of the facility.

5. Review (R) and Approval (A) and Acceptance (Ac) Signatures: (See instructions for definitions of terms and significance of signatures.)

	R/A	Typed/Printed Name/Organization	Signature	Date
Preparer		Craig A. Nesshoefer/ D&D Radiological Engineering		5/21/09
Peer Reviewer	R	Charles Mills/VCO Radiological Engineering		5/27/09
Peer Reviewer (if applicable)	R	NA		
Reviewer		Bruce Culp/Regulatory Compliance		8/17/09
Nuclear Safety (only if 3(a) is Yes)	Ac	Bryan Breffle/ Nuclear Safety	Per Telecon	6/4/09
Project RCM	A	W. R. Spruill/ Radiological Controls		8/17/09
RE Manager ☐ N/A (if not req'd)	A	M. K. Branter/Radiological Engineering Manager	Per E-mail	6/25/09

6. Distribution: (Name and Mail Stop)

7. Does document contain sensitive unclassified information? ☐ Yes ☒ No
If Yes, what category:

8. Will document be externally distributed? ☐ Yes ☒ No

9. NRC related? ☐ Yes ☒ No

EBR-II PRE-DEMOLITION SOURCE TERM

1.0 PURPOSE

The purpose of this TBL is to document the radiological source terms associated with the Experimental Breeder Reactor-II (EBR-II) facility, MFC-767, prior to commencement of D&D activities

2.0 BACKGROUND

Figure 1. EBR-II

EBR-II was built in the late 1950's and achieved initial "dry" (i.e., without sodium) criticality on September 30, 1961, and "wet" criticality (i.e., with the core submerged in liquid sodium coolant) on November 11, 1963. EBR-II went to power (12 MW_e) on August 13, 1964. The EBR-II was designed to demonstrate the feasibility of operating a sodium-cooled fast breeder reactor plant with onsite reprocessing of metallic fuel; demonstrations were successfully carried out from 1964 to 1969.

From 1969, the emphasis at EBR-II shifted to a fast-neutron irradiation facility that tested fuels and materials in support of the Liquid-Metal Fast Breeder Reactor (LMFBR) Program. The EBR-II facility also provided electrical power for ANL-W and INL sites. EBR-II was officially shut down on September 30, 1994. Since then, EBR-II has been prepared for D&D. During its lifetime (August 1, 1964 until September 30, 1994), EBR-II generated 366,780 MWD (megawatt days) of thermal energy.

3.0 DESCRIPTION

The EBR-II reactor is an unmoderated, heterogeneous, sodium cooled, fast breeder reactor with a designed capability of 62.6 MW of heat output. It is completely submerged in a large pot filled with sodium which served as a heat transfer medium to remove thermal energy from the reactor. Figure 2 presents a cross section of the EBR-II reactor showing the major components. Detailed descriptions of the EBR-II components and systems are provided in *EBR-II System Design Descriptions* (Reference 1), *Experimental Breeder Reactor – II, An Integrated Experimental Fast Reactor Nuclear Power Station,* (Reference 2), and *Extending the Operating Lifetime of EBR-II to 30 Years and Beyond,* (Reference 3). Brief descriptions of some of the systems/components pertinent to the radiological characterization, taken from these documents, are presented below.

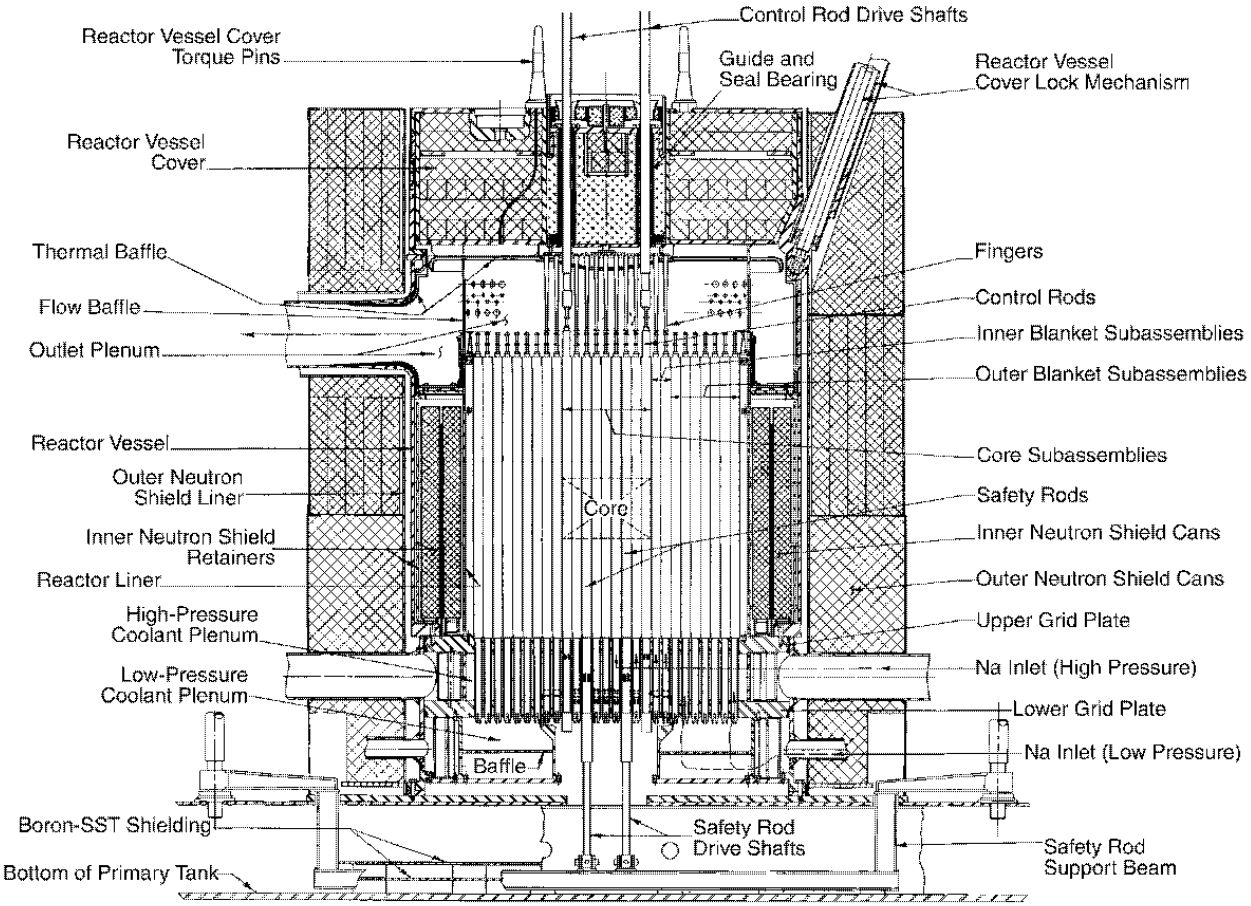

Figure 2. EBR-II Reactor

3.1 REACTOR CORE AND BLANKET

During operation, the EBR-II reactor contained a hexagonal central core containing enriched uranium which was completely surrounded by a radial and an axial blanket. The blankets originally contained depleted uranium and were intended to function both as a neutron reflector and as fertile material for the breeding of plutonium. Later, the depleted uranium in the axial blanket was replaced with stainless steel to decrease the cost of the subassemblies. Early in EBR-II operation an attempt was made to replace a portion of the radial depleted uranium with stainless steel, also for economic reasons. This substitution caused undesirable changes in some aspects of the physics of the reactor. As a result, the stainless steel was removed. Later (~1972), the stainless steel reflector pieces were redesigned and reinserted in rows 6 through 10. In 1994 when the reactor was shut down the radial blanket regions contained stainless steel reflector pieces, depleted uranium, or stainless steel and nickel blanket pieces. The core and blanket region materials were contained in 637 free-standing subassemblies which were contained in and supported by the reactor vessel. Figure 3 presents a photograph of the core/blanket area of EBR-II, Figure 4 is a cross section of the EBR-II reactor, and the grid location designations are presented in Figure 5.

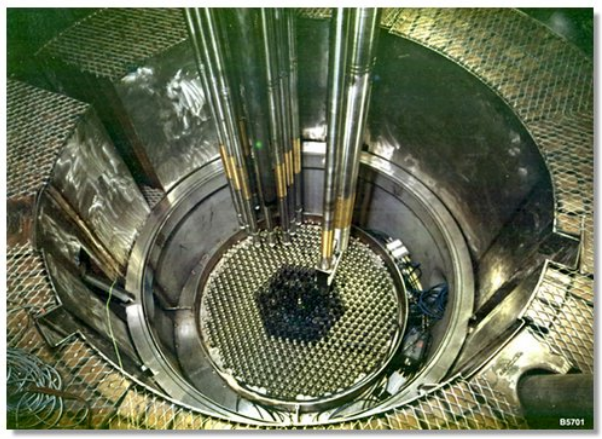

Figure 3. Photograph of EBR-II Core/Blanket Area

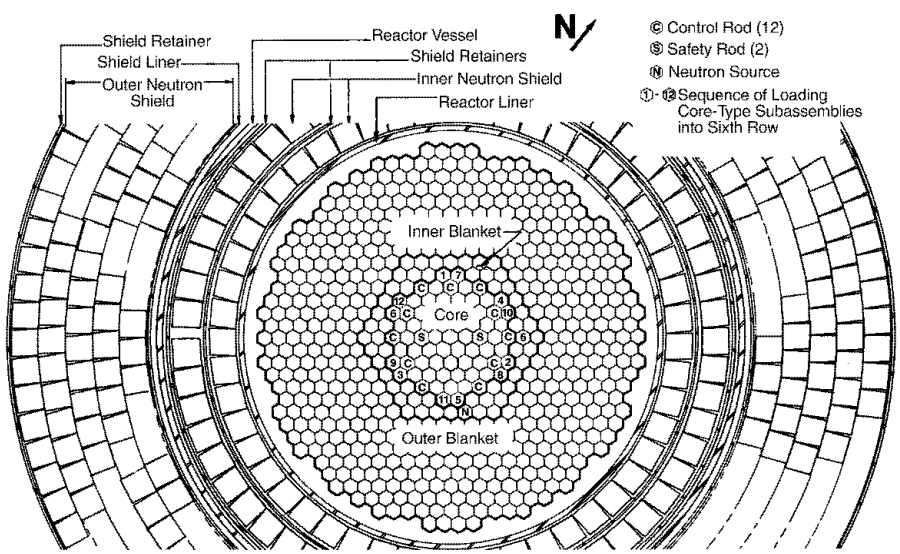

Figure 4. EBR-II Reactor Cross-Section

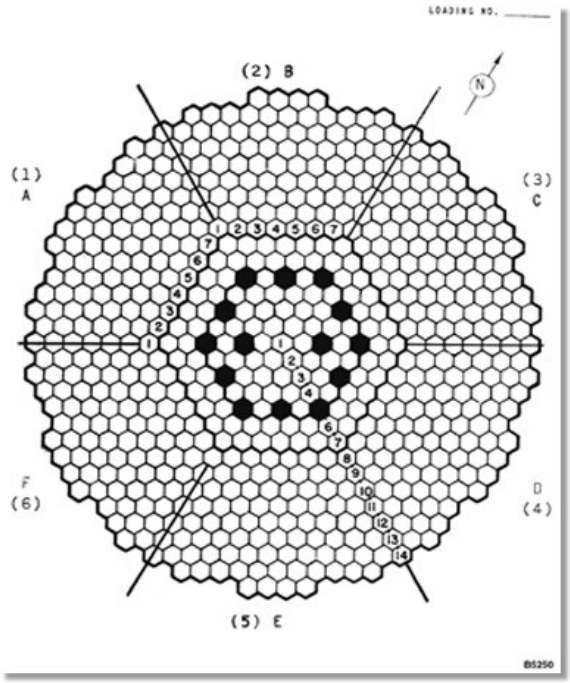

Figure 5. Grid Location Identification

Of the 637 subassemblies, 47 to 59 were core (fuel) subassemblies, 2 were safety rods, 12 were control rods (this number was reduced to 8 during EBR-II operating lifetime with the remaining 4 locations being used as irradiation facilities), 54 to 66 were Inner Blanket subassemblies or Inner Blanket stainless steel reflector pieces, and 510 were Outer Blanket subassemblies or stainless steel reflector pieces. The subassemblies/reflector pieces were all outwardly identical: each had an upper adapter to allow removal by the same handling device; each had a hexagonal support body that contained fuel, blanket material, or reflector material, and each had a lower adapter. The lower adapters had different configurations to prevent positioning in the wrong region and different cooling orifices to ensure the appropriate amount of sodium flow. The subassemblies designed for rows 1 – 5 had a “core” lower adapters, those for rows 6 and 7 had inner blanket (or inner blanket reflector) adapters, those in rows 8 – 16 had outer blanket adapters.

Since the subassemblies in the core and blanket regions were free standing (no upper grid to support the upper ends of the subassemblies) a method was required to support the subassemblies during initial loading and during final unloading. Prior to initial loading, the reactor was loaded with 637 non-nuclear, stainless steel dummy subassemblies. One of these dummy subassemblies (in grid position row 14, section E, position 10, or 14E10) was permanently welded in place in the reactor to establish and maintain the correct orientation of all the subassemblies, Initial reactor loading was accomplished by removing one dummy subassembly and replacing it with the appropriate subassembly. This one for one replacement was continued until all subassemblies were installed. Following final reactor shutdown in 1994, the reactor was defueled on this same one for one replacement basis.

The active core area, including fuel, safety rods, and control rods, had an equivalent radius of 9.92 in. and a height of 14.22 in. This core volume could be increased (and frequently was over the operating lifetime of the plant) with the addition of special fuel subassemblies in the inner blanket (the addition of 6 of these special subassemblies was considered the nominal reactor fuel loading).

Neutron absorbers (poisons) were not used in the control or safety rods of EBR-II during the initial phase of operation of the reactor because of nuclear performance uncertainties and also because of the desire to demonstrate high neutron efficiency (maximizing the breeding ratio was an objective of EBR-II). The movement of fuel was used for reactor control in EBR-II. The control rods and safety rods consisted of modified movable fuel subassemblies. When the EBR-II was converted to an irradiation facility, the control rod design was changed to an absorber follower control rod. While this type of control rod still contained fuel, the upper part of the rod (the section of the rod that is in the reactor core area when the rods are lowered) contained a boron carbide poison. This redesign allowed for reactor control using only eight control rods.

It was recognized during the design phase of EBR-II that a guide would be required for any movable component in the core/blanket regions. Thimbles, placed in the core area, were used to guide the fueled control rods throughout their 14 in. travel. These hexagonal tube thimbles (with similar external cross sectional dimensions as other subassemblies) were located by and supported in the same manner as other subassemblies. The control rods within the thimbles were positioned vertically in the core by control rod drive shafts which were driven by independently controlled electromechanical drives mounted outside of the primary tank. The safety rods, also within thimbles, were positioned in the core by the safety rod drive beam located below the reactor (see Figures 2).

In addition to outer blanket and reflector subassemblies in the outer blanket region, a neutron source subassembly was placed here in grid position row 8, section E, position 5 (8E5). The neutron source was used to initiate neutron production during the start-up phase of the reactor and to provide a reliable neutron flux level for comparison as operation was initiated. The neutron source subassembly consisted of a neutron source thimble (bottom section) containing a beryllium annulus, and a source rod (top portion) containing an antimony cylinder. This neutron source produced neutrons by means of the (γn) reaction in beryllium. In this reaction, the pre-irradiated antimony gave off gamma rays and the surrounding beryllium atoms absorbed this gamma energy then emitted fast neutrons.

3.2 TEST FACILITIES

As stated previously, initial operation of the EBR-II reactor was performed using twelve control rods. When the mission of the facility changed to an irradiation facility, the control rods were redesigned to allow operation with eight and the remaining four control rod locations were converted to test irradiation facilities. The designation, control rod position, and grid position of these facilities were as follows:

Test Facility Identification	Control Rod Position	Grid Position
INSAT 2	2	5D3
INCOT 6	6	5F3
INCOT 8	8	5A3
INSAT 11	11	5C1

These facilities provided a means of continuously monitoring pertinent parameters of experimental fuels and related materials during irradiation in the core and permitted the insertion and monitoring of instrument sensors in the core.

The Fuel-Performance Test Facility (FPTF) was installed in the INCOT 6 facility in the mid 1980's. The FPTF was used to control the flow, and consequently the temperature, of sodium through an experimental irradiation subassembly. This capability provided the means to cycle the temperature, simulating power transients in the experiment, without disturbing flow through other subassemblies.

Included in the FPTF were sensors used to detect effluent sodium flow, effluent sodium temperature, delayed neutrons in the sodium, and sodium boiling.

Each test facility consisted of a "permanent" portion and a "replaceable" portion. The "permanent" portion of the test facility was the drive system and was mounted on the small rotating plug, outside of the primary tank (see section 3.8). The drive system positioned the experiment in the core and raised the experiment out of the reactor (by as much as 8 ft) as needed to permit plug rotation during fuel handling activities.

The "replaceable" potion of the facility extends mostly below the rotating plug and into the primary tank and the reactor core. The "replaceable" portion consisted of the experiment (which may have included an instrumented subassembly or a thimble with various instruments) and an extension tube that attached the experiment to the drive system. An instrumented subassembly was outwardly identical to the standard control rod that it replaced. A typical test facility is shown in figure 6.

Following irradiation of the experiment, the experiment subassembly was disconnected from the extension tube and transferred out of the primary tank using the normal fuel-handling procedures and equipment. The extension tube was removed from the primary tank and stored in a shielded facility that extended from the main floor level to the basement.

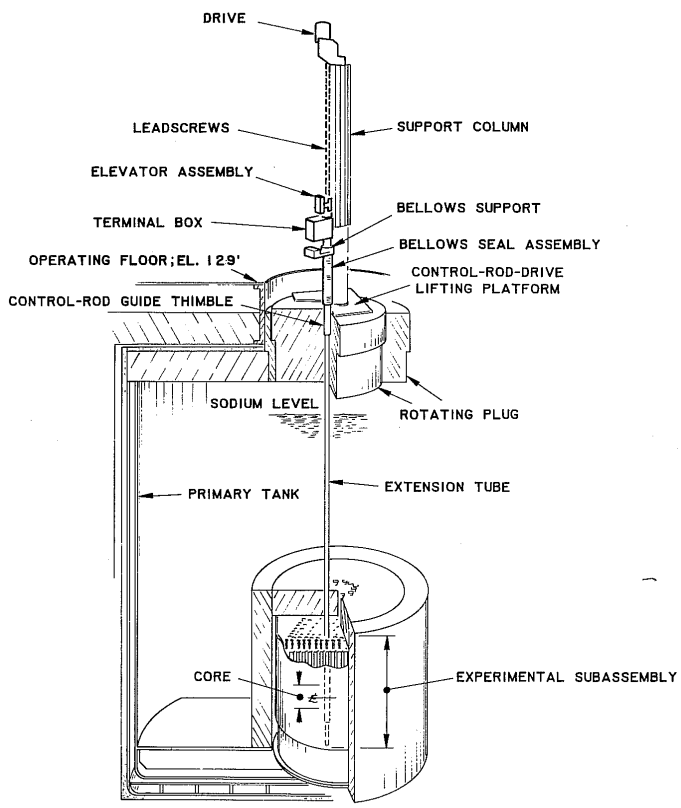

Figure 6. EBR-II Test Facility

3.3 REACTOR VESSEL & RADIAL NEUTRON SHIELD

The reactor vessel was constructed of an outer shell, an inner shell, and thermal baffles, all of 304 SS and extended from the grid plenum assembly on the bottom to the reactor vessel cover on the top (see figures 2 & 6). Radial dimensions of these components are shown in Figure 7.

The radial neutron shield reduced neutron leakage from the reactor to minimize the activation of the secondary sodium and components exterior to the reactor. It also served as a neutron reflector conserving a relatively small number of neutrons that would have otherwise leaked from the reactor. The entire radial shield consists of an inner shield, located between the inner and outer shells of the reactor vessel, and an outer shield located outside of the vessel.

The inner shield has two layers, or rows, that go around the vessel circumference and extended upward from the grid plenum assembly to just below the reactor outlet. These layers are formed mostly from plain graphite contained within 0.109 in. thick 304 stainless steel cans. Cans in the vicinity of nuclear instrumentation were filled with static sodium to reduce moderation and loss of neutrons between the reactor and the instrument. Cans are 4.34 in. square, most are 52.5 in. long, and there are a total of 108 cans forming the inner shield. The cans were positioned vertically with the cans in one row overlapping those in the other row to minimize neutron streaming. Spacer bars were installed between the inner shell and first shielding row, between the inner and outer shielding rows, between the outer shield row and thermal baffle, and between the thermal baffle and outer shell to allow sufficient sodium coolant flow to cool these components. Figure 8 presents the orientation of the inner neutron shield.

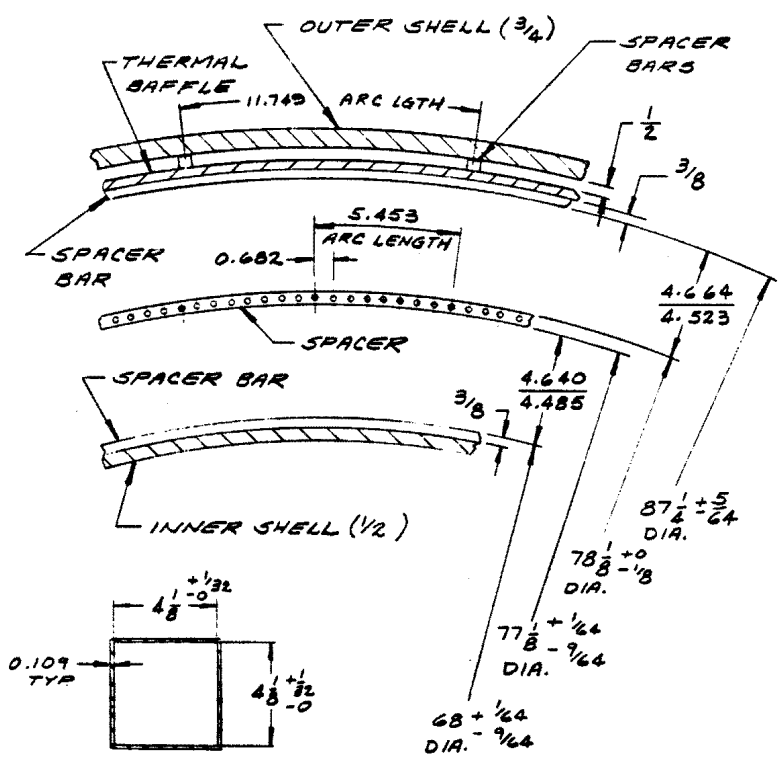

Figure 7. Radial Dimensions of the Reactor Vessel and Inner Neutron Shield

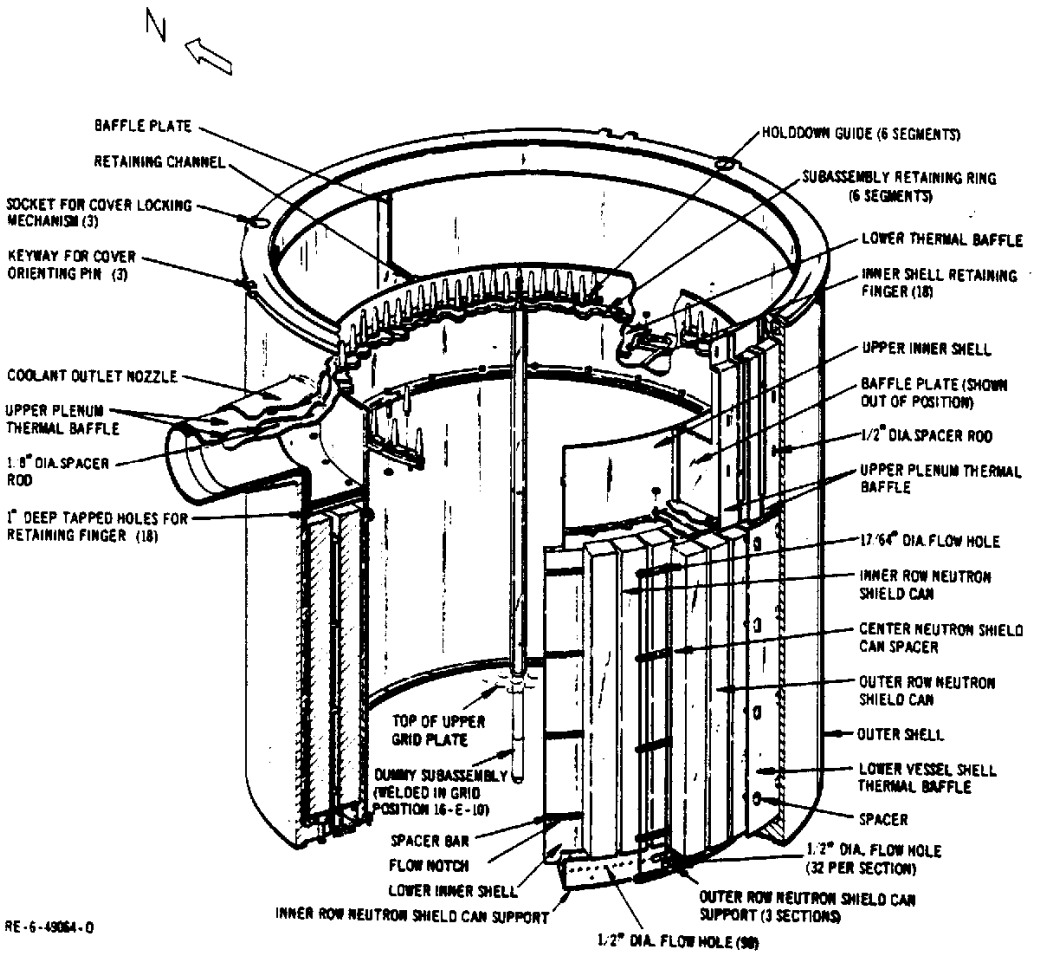

Figure 8. EBR-II Vessel and Inner Neutron Shield

The outer radial shield consists of five layers which form an annular assembly 13.167 ft high, 1.95 ft thick, and with an OD of 11.8 ft. The outer shield is divided into three vertical tiers, each ~53 in. high. The cans in each tier are held in place by a cage-like stainless steel wire mesh. The inner row of the outer shield is separated from the reactor vessel by a stainless steel plate called the neutron shield liner. The graphite filled cans forming the outer shield are similar to those in the inner shield with the following exceptions:

- The graphite in rows 2 and 4 of the outer shield (rows 4 and 6 of the neutron shield) contain 3% by weight boron carbide (Reference 3);
- In addition to containing 948 full cans (4.34 in. square cross section), the outer shield contains 49 half cans (2.28 in x 4.34 in. cross section) and 12 special cans (cans of differing shapes designed to provide clearance for other installed components).

Figure 9 presents a layout of the outer radial neutron shield.

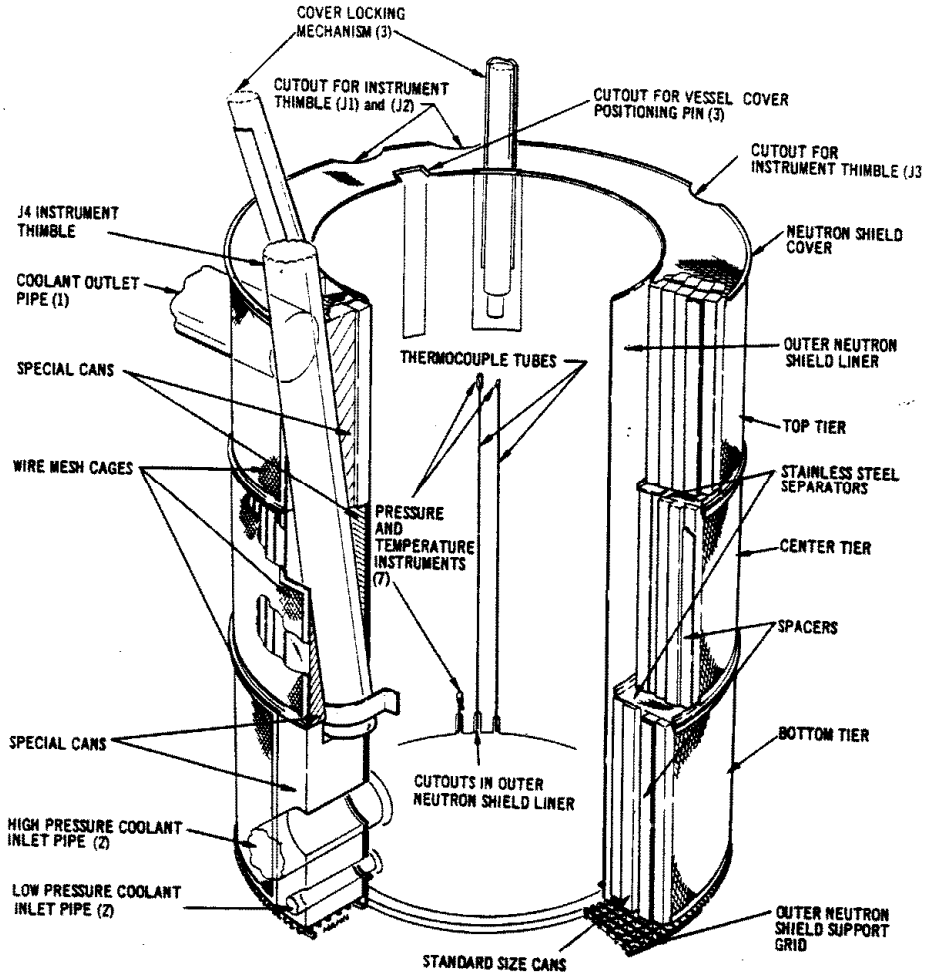

Figure 9. EBR-II Outer Neutron Shield

3.4 GRID PLENUM ASSEMBLY

The grid plenum assembly forms the lower section of the EBR-II reactor (see Figure 2) and is a welded Type 304 stainless steel assembly that supports and positions the core, blanket, and control subassemblies, carries much of the weight of the rest of the reactor, and forms the inlet plenums for the high pressure and low pressure coolant. Both plenums incorporate baffle plates, used to promote uniform flow distribution, and impact baffles, used to deflect the incoming flow in a circumferential direction. An outer shell connects and supports the grid plates and associated loads and contains the coolant inlet nozzles. Figure 10 shows the components forming the grid plenum assembly.

As shown in Figure 10, a pair of grid plates forms the upper and lower boundaries of the high pressure plenum. High pressure coolant entered this plenum, flowed through holes in the sides of the lower adapters of core and inner blanket subassemblies then up through these components to cool them.

The lower grid plate and bottom cover plate form the top and bottom of the low pressure plenum. Low pressure coolant entered this plenum, flowed through the interconnecting tubes between the upper and lower grid plates and then into the outer blanket subassemblies to cool these components.

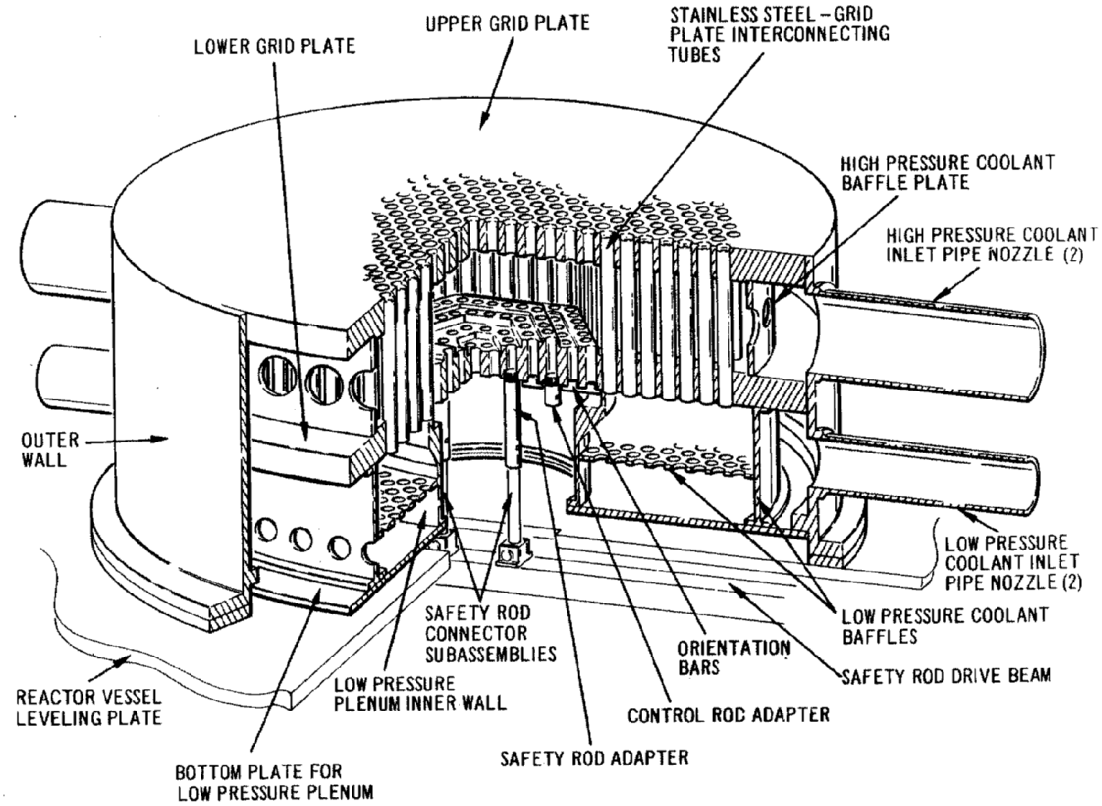

Figure 10. EBR-II Grid Plenum Assembly

3.5 REACTOR VESSEL COVER

The reactor vessel cover is located on the top of the EBR-II reactor (see Figure 2). The cover consists of an inner and outer section. The outer section is a semi-hollow, doughnut-shaped 304 stainless steel structure 34.5 in. high and 92.5 in. in diameter. The inner section is 26 in. in diameter and is connected to the outer section by a stainless steel bellows at the bottom and is welded at the top. The inner section contains 12 Stellite-6 guide tubes that accommodated the 12 control rod drive shafts and steel ball shielding materials. The outer section contains 3 Stellite-6 guide tubes that accommodated equipment associated with fuel handling and canned borated graphite similar to that used in rows 2 and 4 of the outer radial neutron shield. These axial neutron shield cans are stacked in six layers and each layer is positioned at a right angle to the layer below in a polygon array and are staggered to minimize neutron streaming. Figure 12 presents the orientation of the neutron shield cans within the vessel cover.

Attached to the bottom of the reactor vessel cover are a thermal shield (a stainless steel plate), a radial flow baffle and core/inner blanket subassembly holddown fingers. Figure 11 shows the various components forming the vessel cover.

During reactor operation, the cover was locked in place by the cover locking mechanisms (see Figure 2) to form the top of the coolant outlet plenum. During refueling activities, the cover could be raised 106.5 in. to clear the length of the subassemblies.

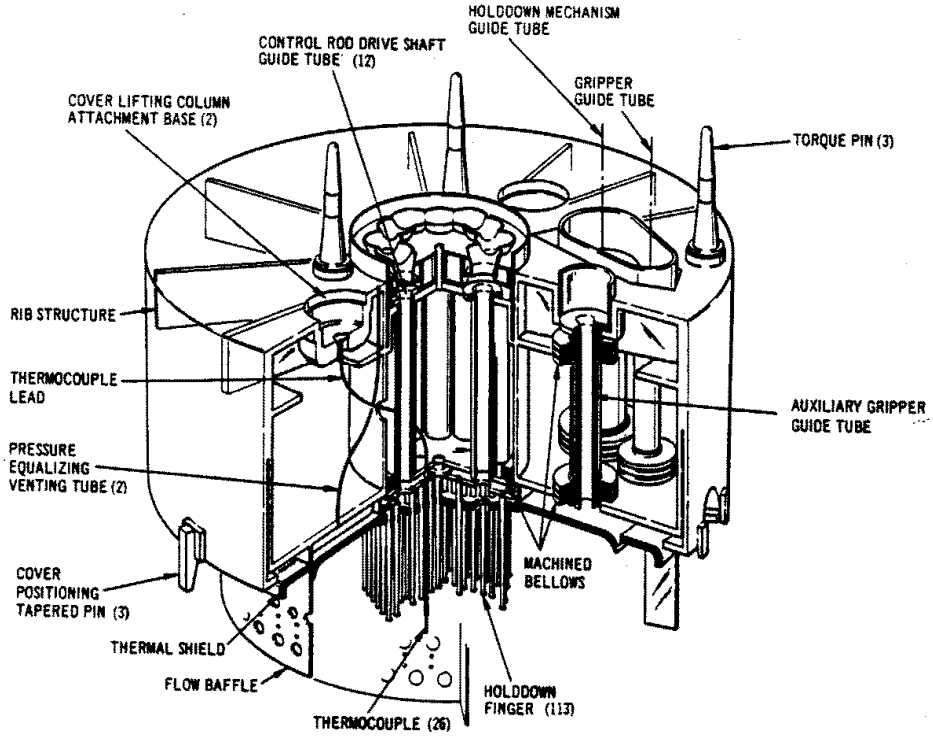

Figure 11. EBR-II Vessel Cover

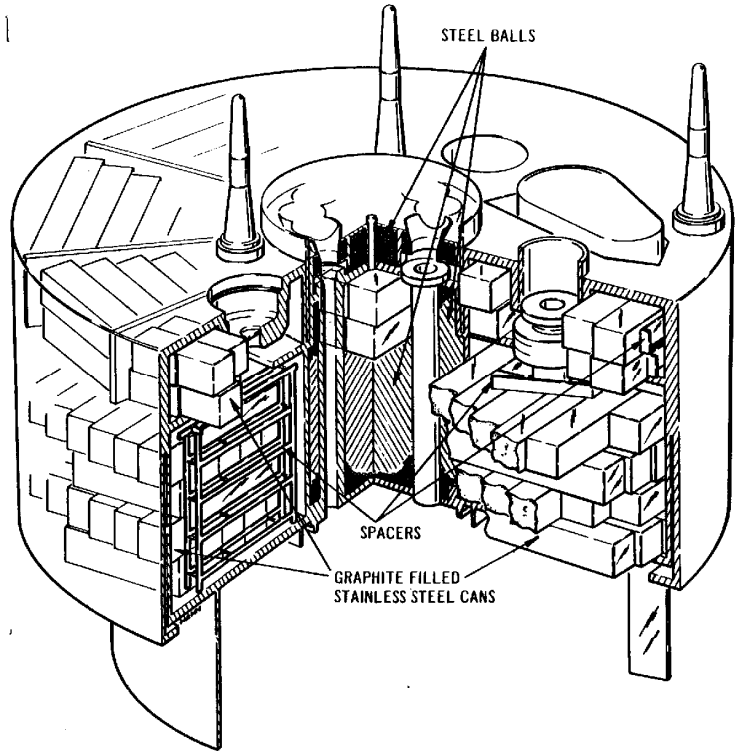

Figure 12. EBR-II Vessel Cover Neutron Shield

3.6 REACTOR NUCLEAR INSTRUMENTATION

The nuclear instrumentation systems monitor the reactor power by measuring the intensity of the neutron flux during all modes of reactor operation including shutdown maintenance, fuel handling, reactor startup, approach to power and full power operation. The nuclear instrumentation system includes a wide-range system consisting of three identical, redundant, and independent channels each of which covers the 10 decades of neutron flux range of EBR-II. The detectors for these three wide range systems are guarded fission chambers containing uranium and are positioned in the J-1, J-3, and J-4 thimbles (see Figure 9) at the approximate midplane of the reactor core.

3.7 PRIMARY COOLANT SYSTEM

The main function of the primary coolant system was to remove the heat produced in the reactor core and transport it to the intermediate heat exchanger (IHX) where this thermal energy was transferred to the secondary coolant system. To perform this function, liquid sodium was pumped from the primary tank by two centrifugal pumps, through the high pressure and low pressure (throttled) piping to the reactor, and then to the shell side of the shell-and-tube IHX. The entire primary coolant system, and the reactor itself, were contained within the primary tank were completely submerged in the liquid sodium primary coolant. Major primary system components and the primary coolant flow paths are shown in Figure 13. A brief description of these major primary system components is provided below.

Primary Pumps

The EBR-II primary coolant pumps are a matched pair of vertically mounted centrifugal pumps. Pump motors are mounted on a penetration nozzle in the primary tank cover, and the pump structures are inside the primary tank. These pumps took their suction directly from the bulk sodium in the primary tank and discharged to a 12 in. pipe nozzle that was integral with the pump assembly.

Primary Auxiliary Pump

The purpose of the primary auxiliary pump was to maintain required coolant flow to remove decay heat from the reactor core following a reactor scram from high power and the simultaneous failure of both the primary pumps. The primary auxiliary pump was a conduction-type DC electromagnetic unit (no moving parts) that operated continuously during reactor operation. When the two primary pumps were operating, the auxiliary pump had no appreciable effect on the primary coolant flow because the auxiliary pump head was only ~0.5% of the main pump head.

Intermediate Heat Exchanger

Heat from the radioactive primary sodium was transferred to the nonradioactive secondary system by the IHX. The IHX is a shell and tube, counter-flow unit which operated completely submerged in the reactor sodium coolant. The IHX is ~5 ft diameter, 24 ft long and has a total heat transfer surface area of ~4800 sq ft. The IHX was suspended from above by a shield plug and was positioned within a 6 ft diameter x 18.5 ft long well casing which was an integral extension of its primary tank nozzle. Activation of secondary sodium coolant was minimized by the installation of neutron shielding materials. This neutron shielding consisted of a 1 in. thick

layer of 1.5 wt % boron stainless steel that covered the lower 48 in. of the well casing and a ¼ in. thick layer of boral (boron/aluminum alloy) contained within the lower head of the IHX.

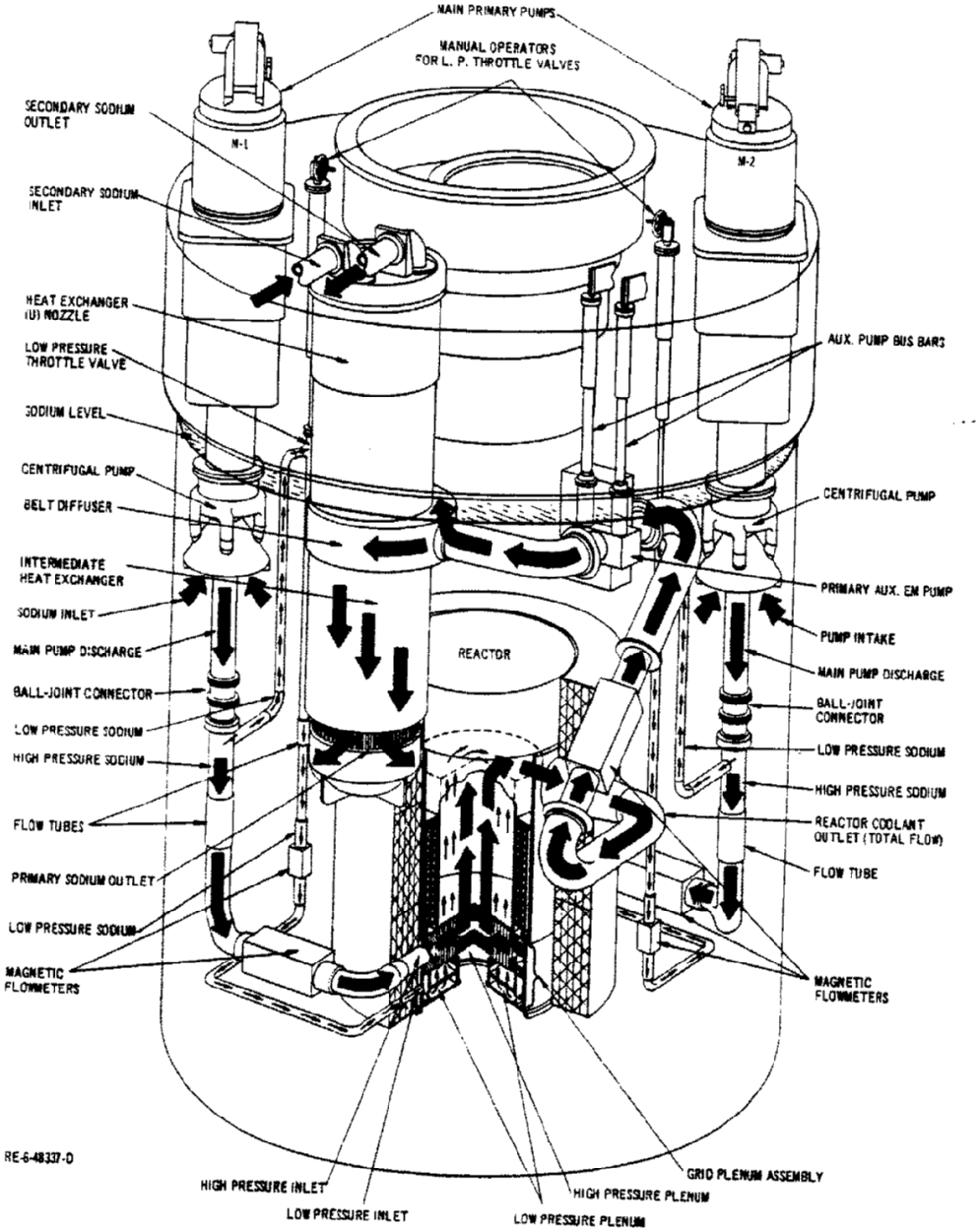

Figure 13. EBR-II Primary System Components and Coolant Flow path

Primary Sodium Piping

The primary sodium system piping can be divided into three major sections: 1) the high pressure supply to the reactor, 2) the low pressure supply to the reactor outer blanket, and 3) the reactor outlet piping. Since this piping had to operate completely submerged in 700˚ F sodium, all material in the piping system is 304 stainless steel.

The high pressure supply piping, which supplied sodium coolant to the reactor core and inner blanket regions, connected the discharge from each of the two primary pumps to the high pressure

inlet nozzles of the grid plenum assembly. This high pressure piping was constructed of 12 in. Schedule 40 pipe, except for ~2.5 ft of 10 in. Schedule 40 pipe which connected to the plenum inlet nozzle.

The low pressure supply piping provided lower pressure sodium coolant for cooling subassemblies in the outer blanket region. The low pressure coolant piping diverted coolant from the discharge of the main coolant pumps and directed this coolant flow to a throttle valve which was positioned to provide both the appropriate pressure drop and the necessary flow to the outer blanket. Piping for this system was a combination of 6 in. and 4 in. Schedule 40 pipe.

The reactor outlet piping directed the high temperature sodium from the reactor outlet to the IHX. The reactor outlet piping was formed of 14 in. Schedule 20 pipe and was contained within a sleeve constructed of 18 in. Schedule 10 pipe. The two pipes were held concentric by spring-loaded spacers placed at the most probable stress points. Since the coolant temperature at the reactor outlet was ~883 ˚F and the bulk coolant in the primary tank was ~700 ˚F, the outer pipe sleeve provided a thermal barrier to minimize both heat loss and stress in the outlet piping. The void between the inner and outer piping was filled with static sodium. The "Z" shape of the outlet piping (see Figure 13) was used because it required a minimum amount of space and had sufficient flexibility to relieve thermal stresses in the pipes.

Primary Tank Assembly

The primary tank is a double-walled, 304 stainless steel, cylindrical tank about 27 ft in diameter by 27 ft high containing the nuclear reactor, the entire primary cooling system, and portions of the fuel handling system. All penetrations into the tank were through the primary tank cover, above the bulk sodium level. The primary tank and the support structure are presented in Figure 14.

The primary tank and support structure are completely independent of each other except at the top. The primary tank is supported by six hangers which are welded to each of the radial beams in the tank cover and bear on six high-strength steel rollers supported by the top support structure. This method of suspending the primary tank allows the tank to expand downward and the tank cover to expand radially as temperatures increase.

A temperature difference of ~600 ˚F existed across the top structure of the primary tank system during reactor operation. To maintain accurate positioning of equipment penetrations into the primary tank, the upper structure was divided into two sections. The lower section of the structure, the primary tank cover, was maintained at a high temperature and provided support and alignment for components, such as the IHX, primary pumps, and instrument thimbles, which projected into the primary tank. For shielding, the primary tank cover was filled to a depth of ~26 in. with 3/8 in. diameter carbon steel balls The upper section, the top support structure, was maintained at a low temperature and provided support for the primary tank, biological shield, and both rotating plugs (plugs that could rotate, one within the other with offset centers of rotation, as necessary to insure the correct alignment between the fuel handling equipment and the different subassemblies).

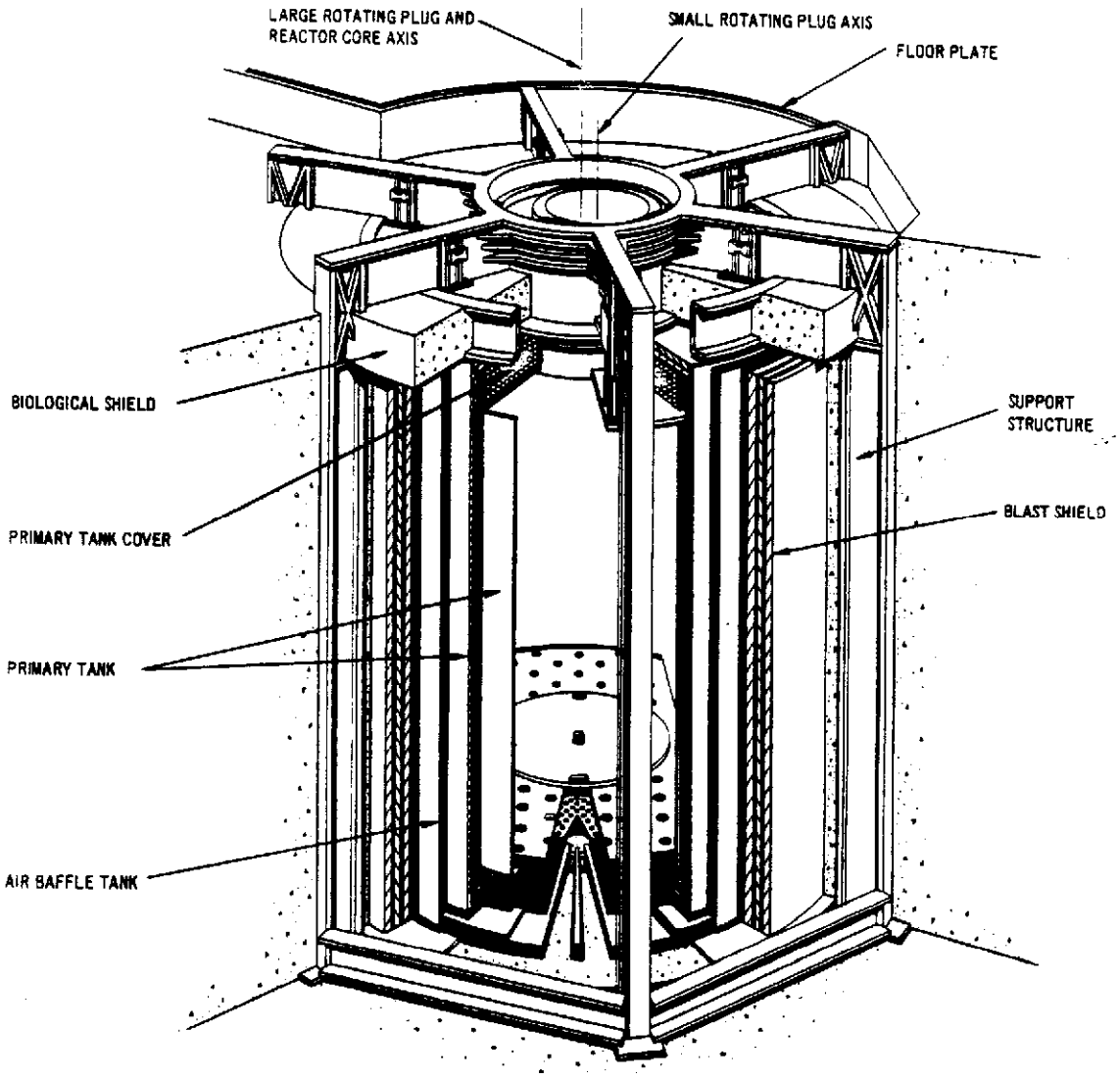

Figure 14. EBR-II Primary Tank and Support Structure

3.8 SHUTDOWN COOLING SYSTEM

Decay heat generated in the reactor during shutdown was normally removed from the primary system by the secondary sodium system in the IHX. However if the secondary system was not operational or if the reactor cover was raised (during refueling for example) decay heat was transferred to the bulk sodium in the primary tank. An undesirable temperature rise could occur if this decay heat was transferred the bulk sodium over an extended period of time. The shutdown cooling system prevented this undesirable temperature rise by transferring the excess heat to the air outside the reactor building.

Two identical cooling loops comprised the shutdown cooling system and each loop consisted of a shutdown cooler plug (a heat exchanger plug located in the primary tank), a shutdown cooler box assembly (an assembly located on the outside of the reactor building which contained the

sodium to air heat exchanger), and associated piping and equipment. This system is shown in Figure 14. The system provided heat transfer through natural convection (flow was independent of any power source) of the sodium-potassium (NaK) eutectic alloy. In each closed loop, flow occurred between the heat exchanger plug in the primary tank to the heat exchanger core in the box assembly.

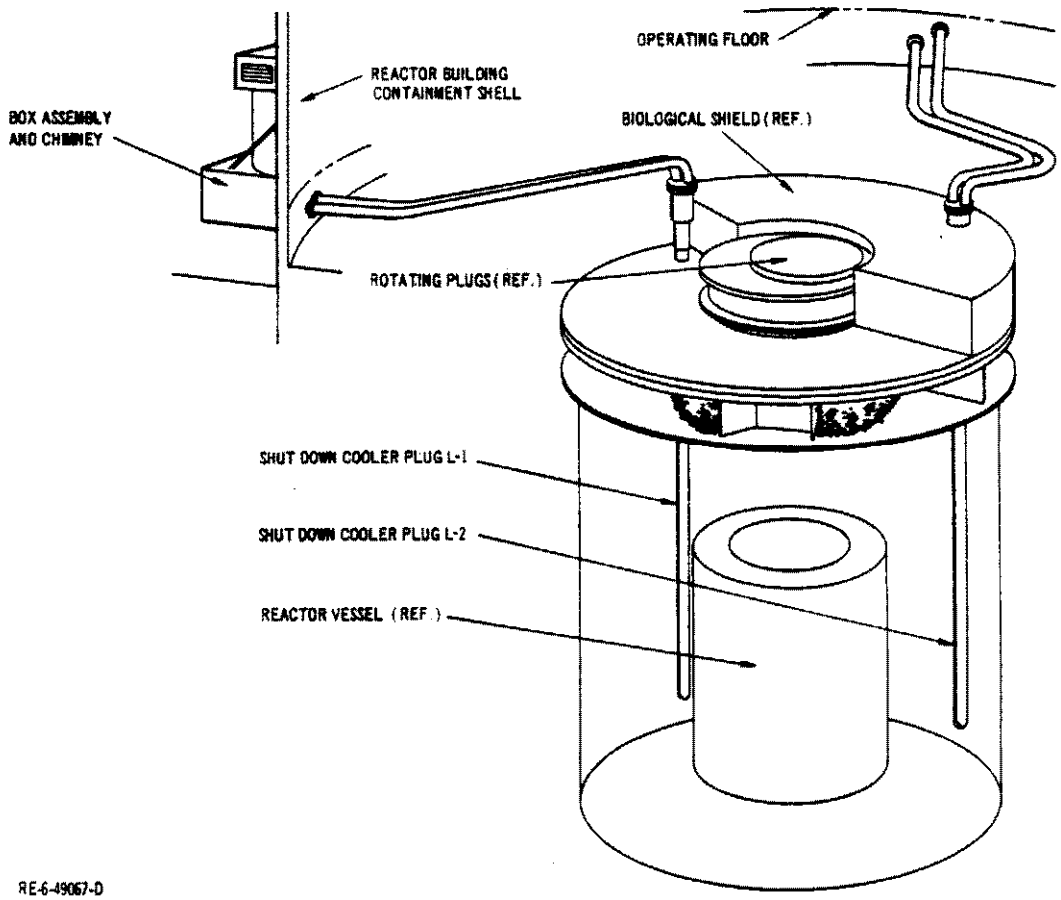

Figure 14. EBR-II Shutdown Cooling System

3.9 PRIMARY SODIUM PURIFICATION SYSTEM

The primary sodium purification system continuously purified the primary sodium and consisted of a sodium surge tank (used for filling the system for start up, provided a place for accumulating entrained gases, and, since most purification system components were position in the facility below the bulk sodium level of the primary tank, provided a siphon break to prevent the draining of primary sodium in the event of a break in the purification system), a DC-EM pump (circulated the sodium through the system), an economizer (conserved heat that would have been otherwise lost in the process of cooling the sodium to near cold trapping temperature), a cesium trap (removed Cs-137 from the primary sodium), and a cold trap (a crystallizer tank that removed oxides and hydrides of sodium and other impurities by precipitation).

3.10 PRIMARY INERT GAS SYSTEM & CGCS

The primary inert gas system maintained a continuous argon gas blanket on all sodium surfaces within the primary tank (i.e. the void between the bulk sodium level and the primary tank cover). This inert gas, or cover gas, protects the sodium from reaction with air (and its included moisture).

Related to the primary inert gas system is the cover gas cleanup system (CGCS). The CGCS removed radioactive fission gas from the primary inert gas system by a cryogenic distillation process. Cover gas (containing greater than 1000 ppm sodium) entering this system was first heated in a pre-heater to over 900 ˚F to insure that all sodium was vaporized. The gas was then cooled to about 350 ˚F while passing through the controlled temperature profile (CTP) condenser (an annular tank filled with Rashig rings). The sodium vapor diffused to, and condensed on, the sodium-wetted surfaces of the Rashig rings. The condensed sodium was then drained back to the primary tank. The non-condensed aerosol and gas mixture, now containing less than 1 ppm sodium, then passed through sintered-metal aerosol filters where final aerosol removal occurred. The gas then flowed through piping outside of MFC-767 to the remainder of the CGCS system.

The major component of the CGCS system, not located in MFC-767, responsible for removal of the fission gas was the cryogenic distillation column. In the cryogenic distillation column, the now relatively sodium-free cover gas was first bubbled through liquid argon where some of the radioisotopes were removed, then the gas was passed through a packed bed where counter-flowing liquid argon stripped the remainder of the fission gases from the cover gas.

Following fission gas removal, the cover gas was returned to MCF-767 where it passed through a re-heater prior to being return to the primary tank.

The CGCS components located in MFC-767 including the pre-heater, CTP condenser, re-heater, valves, and instrumentation are surrounded by a shielded enclosure on the main floor level.

3.11 PRIMARY TANK HEATING SYSTEM

The primary tank heating system was used to heat the primary sodium to maintain a minimum temperature of 250 ˚F when the reactor was not operating at a sufficient power level to make up the total heat losses of the primary system. The heating system consisted of six identical in-tank heaters. Each heater assembly contained four removable cartridge-type heating elements encapsulated in a sodium-filled cylinder isolated from the primary tank.

3.12 REACTOR BUILDING SHELL

The reactor building shell is a steel enclosure that completely envelopes the reactor building volume. It is cylindrical and has a hemispherical top closure and a semi-ellipsoidal bottom closure. The shell ID is 80 ft and the total height is about 146 ft (of which ~48 ft is below grade). Figure 15 presents the shell and the EBR-II areas contained within.

The building shell material is 1 in. thick ASTM 201, grade B, carbon steel. A reinforced concrete missile shield, 12 in. thick lines the inside of the building shell between the operating floor and the building crane. Above this elevation, the shell and its hemispherical top are lined with a 6 in. reinforced concrete layer.

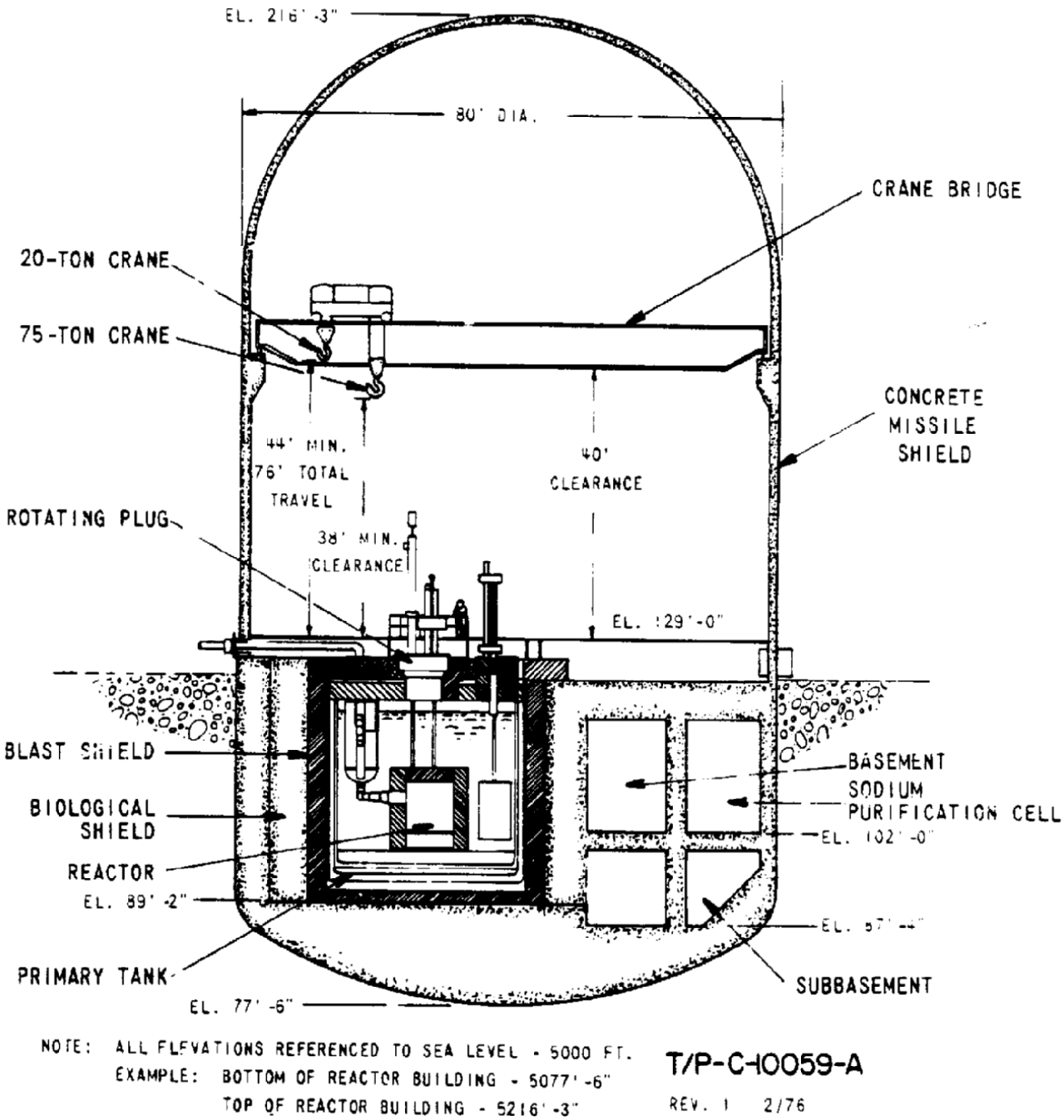

Figure 15. EBR-II Reactor Building Shell

4.0 EBR-II PLANT CLOSURE

(From Reference 4)

In 1994 the U.S. Congress ordered the shutdown of EBR-II amid concerns about plutonium production. In that year, Argonne National Laboratory established the EBR-II Plant Closure Project with the following goals:

- De-fuel the reactor;
- Remove and treat the bulk sodium coolant
- Place EBR-II into a dormant radiologically and industrially safe condition;
- Remove/alter reactor systems to prevent reactor restart.

The project was divided into three phases. Phase I involved the defueling of the reactor and was performed from October 1994 to December 1996. During the defueling, all core, neutron source, inner blanket, reflector, outer blanket, control and experiment subassemblies were removed and were replaced with un-irradiated stainless steel dummy assemblies (Reference 5). The only irradiated components remaining in the core/blanket regions following this activity were 12 control rod thimbles, 8 control rod drive rods, and the welded in stainless steel dummy subassembly located in grid position 14E10 (Reference 5).

Phase II involved the removal of the bulk sodium from the primary and secondary systems and was completed in March 2001. The primary tank was not originally designed to be drained thus a draining system was designed using a annular induction pump to pump the sodium from the tank. As part for the primary draining process ~284 gallons of NaK from the emergency shutdown coolers and ~120 gallons of NaK from the primary purification system were drained into the primary tank to be removed with the primary sodium (Reference 6). The estimated quantities of residual sodium remaining in MFC-767 are presented in Table 1 (from Reference 6).

Table 1. MFC-767 Residual Sodium

System	Estimated Quantity Of Sodium/NaK* (gal)
Primary Tank	<300
Primary Tank Ancillary Equipment	<100
IHX	<40
Pressure Transmitters	<0.3*
Shutdown Cooler Plugs	<50*

Phase III involved the treatment of the primary and secondary residual sodium volumes with CO_2 and water vapor in a process called carbonation. The carbonation was stopped in March of 2002 then restarted from May 2004 through December 2005. Carbonation treatment was terminated in December 2005 due to diminishing reaction rates.

Additional work activities performed by the EBR-II Plant Closure Project which reduced the pre-demolition source term of the facility include the removal of the primary cold traps (Reference 7) and the removal of the cesium trap (Reference 8).

5.0 SOURCE METHODOLOGY & ASSUMPTIONS

Items making a significant contribution to the MFC-767 facility radiological source term include the following systems/components:

- Activated items remaining in the core/blanket region of the reactor including the control rod thimbles (12), the welded-in 14E10 dummy assembly, and the remaining control rod drive rods (8);
- The activated components within the primary tank but outside of the core/blanket;
- The activation activity associated with the test facility extension tubes stored within the pentagon area;
- The detectors of the wide range nuclear instruments and the delayed neutron detectors associated with the Fuel-Performance Test Facility;
- Residual primary sodium within the primary tank;
- Residual primary sodium within the primary ancillary systems;
- Secondary sodium remaining in the IHX;
- Residual surface contamination on components with the primary tank;
- Surface contamination in the shielded pentagon area.

While areas containing surface contamination are posted throughout the facility, the level of contamination and the actual contaminated area are both very small (Reference 9) and thus do not significantly contribute to the facility source term.

5.1 CORE/BLANKET ACTIVATION SOURCE TERM

Throughout the life of EBR-II, control rod drive shafts, control rod thimbles, and stainless steel reflector pieces were periodically replaced and the removed component disposed of at the Subsurface Disposal Area (SDA) at the Radiological Waste Management Complex (RWMC). INEEL/EXT-02-01385 (Reference 10), *Estimated Radiological Inventory Sent from Argonne National Laboratory-West to the Subsurface Disposal Area from 1952 through 1993*, was written to estimate the source term associated with this and other waste (mainly stainless steel subassembly hardware activated in EBR-II). Appendix C of INEEL/EXT-02-01385 includes an activation analysis of long lived radionuclides in control rod drive shafts, control rod thimbles, reflector pieces, and other activated stainless steel items removed from EBR-II based on neutron flux data and ORIGEN modeling of the materials. The results of these calculations for an outer blanket stainless steel piece, a control rod thimble and a control rod drive shaft are presented in Table 2. Also presented in Table 2 is the activity of these items decayed from 1993 to 2009 (16 years).

Table 2. EBR-II Core Component Activity

Description =	Outer Blanket Steel		Control Rod Thimble		Control Rod Drive	
Serial No. =	U-9810		CRTH-60		XC-1A	
Mass (g) =	3.34E+04		6.40E+03		1.89E+04	
Radionuclide	Initial Activity (Ci)	Decayed Activity (Ci)	Initial Activity (Ci)	Decayed Activity (Ci)	Initial Activity (Ci)	Decayed Activity (Ci)
C-14	5.19E-02	5.18E-02	5.02E-03	5.01E-03	9.45E-03	9.43E-03
Cl-36	5.46E-06	5.46E-06	3.58E-06	3.58E-06	4.85E-06	4.85E-06
Co-60	2.60E+03	3.17E+02	2.18E+02	2.66E+01	6.13E+02	7.47E+01
Ni-59	2.73E-01	2.73E-01	2.03E-02	2.03E-02	4.75E-02	4.75E-02
Ni-63	2.01E+01	1.80E+01	1.46E+00	1.31E+00	3.52E+00	3.15E+00
Nb-94	9.14E-03	9.14E-03	5.96E-04	5.96E-04	1.53E-03	1.53E-03
Tc-99	2.22E-02	2.22E-02	1.52E-03	1.52E-03	3.96E-03	3.96E-03

The activity values of the remaining core/blanket area components were determined as follows:

- The source term associated with the 14E10 dummy piece was assumed to be the same as that shown in Table 2 for the decayed activity of the outer blanket steel. This is a reasonable/conservative assumption since this dummy piece was located in an outside row of the outer blanket and the Table 2 activity values were computed using a 90% maximum flux value.
- The source term associated with each remaining thimble was assumed to be the same as the decayed thimble activity presented in Table 2. The Table 2 values were multiplied by 12 to account for the activity in each of the 12 remaining thimbles.
- The source term associated with each remaining control rod drive shaft was assumed to be the same as the decayed activity of the control rod drive presented in Table 2. The Table 2 values were multiplied by 8 to account for the activity in each of the remaining 8 drive shafts.

Table 3 presents the activation activity associated with the components remaining in the core/blanket regions of the EBR-II reactor.

Table 3. EBR-II Core/Blanket Area Activity

Radionuclide	14E10 Dummy Activity (Ci)	Control Rod Thimbles (12) Activity (Ci)	Control Rod Drive Shafts (8) Activity (Ci)	Total (Ci)
C-14	5.18E-02	6.01E-02	7.55E-02	1.87E-01
Cl-36	5.46E-06	4.30E-05	3.88E-05	8.72E-05
Co-60	3.17E+02	3.19E+02	5.98E+02	1.23E+03
Ni-59	2.73E-01	2.44E-01	3.80E-01	8.96E-01
Ni-63	1.80E+01	1.57E+01	2.52E+01	5.89E+01
Nb-94	9.14E-03	7.15E-03	1.22E-02	2.85E-02
Tc-99	2.22E-02	1.82E-02	3.17E-02	7.21E-02
Total	3.35E+02	3.35E+02	6.24E+02	1.29E+03

5.2 REACTOR ACTIVATION SOURCE TERM OUTSIDE CORE/BLANKET

As discussed previously, the EBR-II was designed to demonstrate the feasibility of operating a sodium-cooled fast breeder reactor. The fission cross section of fuel material in a fast neutron environment is small (1 to 2 barns) compared to the cross section for thermal neutrons (600 to 800 barns). This results in a larger mass of fissionable material being required, compared to a thermal reactor, and, to reduce the leakage of neutrons from the core, this larger mass was arranged in the most compact geometry possible. Sodium was selected as the coolant because, in addition to its excellent thermal properties, sodium has a smaller neutron absorption and moderating effect than water and permits a greater breeding ratio and better neutron economy. Due to the smaller moderating effect, the fast neutron spectrum resulting from the use of sodium coolant results in a greater breeding potential and results in less parasitic neutron absorption by structural materials since the cross section of most materials decrease with increasing neutron energy.

In general, for the purpose of the reactor source term following shut down, the most important type of activation reaction is thermal neutron capture in which an isotope of mass A captures a neutron to produce a product of mass A+1. Capture rates are normally maximum in the thermal region, which, at room temperature is 0.025 eV. Neutron capture cross sections are defined for a thermal region of 0 to 0.5 eV. In the epithermal (intermediate) region between 1 KeV and a few KeV, especially for elements with intermediate and high mass numbers, there are often particular energies for which the rate of the absorption of neutrons is also high.

At the center of the EBR-II core, the peak neutron flux was 3.55E+15 n/cm^2-sec with a median neutron energy of 450 KeV. The neutron flux from the core center into the outer blanket is presented in Figure 16. The neutron energies in Figure 16 are divided into two groups; high energy, those which are above 1.35 MeV (the U-238 fission threshold) and low energy, those that are below this value. As shown in Figure 16, the materials forming the inner and outer blanket regions soften the neutron spectrum (decrease the number of high energy neutrons). The median neutron energy at the outer edge of the outer blanket is 150 KeV (Reference 1).

While a portion of the neutrons generated from fission in the core escaped the core and blanket regions and were available for interactions with neutron shield and vessel structural materials, nearly all, by at least and order of magnitude, neutrons escaping the core/blanket regions were generated in the outer 20 cm of the outer blanket (Reference 11).

Figure 16 EBR-II Neutron Flux in Core and Blanket regions

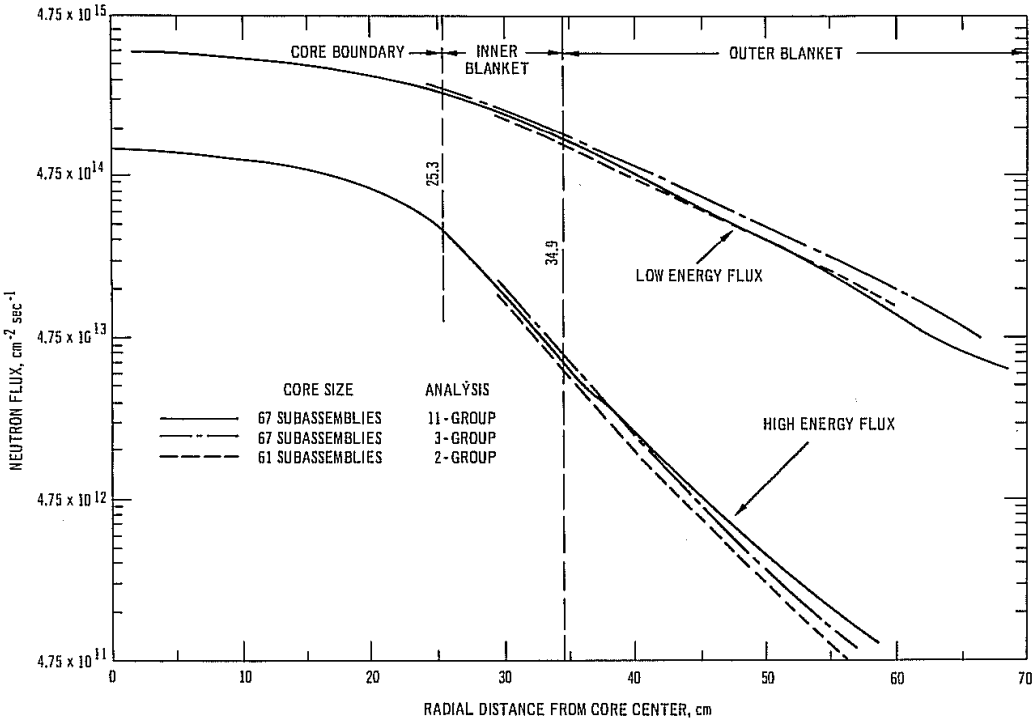

The radial neutron flux thru the reactor neutron shields and vessel structural components taken from ANL-6614 (Reference 11), *Experimental Breeder Reactor-II (EBR-II) Shield Design,* is presented in Figure 17. Figures 18 and 19 show the axial neutron flux above (Figure 18) and below (Figure 19) the core area. For reference, the neutron flux for a typical pressurized water reactor (PWR) taken from NUREG/CR-3474 (Reference 12), *Long-Lived Activation Products in Reactor Materials,* is presented in Figure 20. In figures 17 – 19 the neutron energies are divided into three groups: fast flux (greater than 24.5 KeV), intermediate flux (0.27 eV to 24.5 KeV), and slow flux (less than 0.27 eV).

Figure 17. EBR-II Radial Neutron Flux

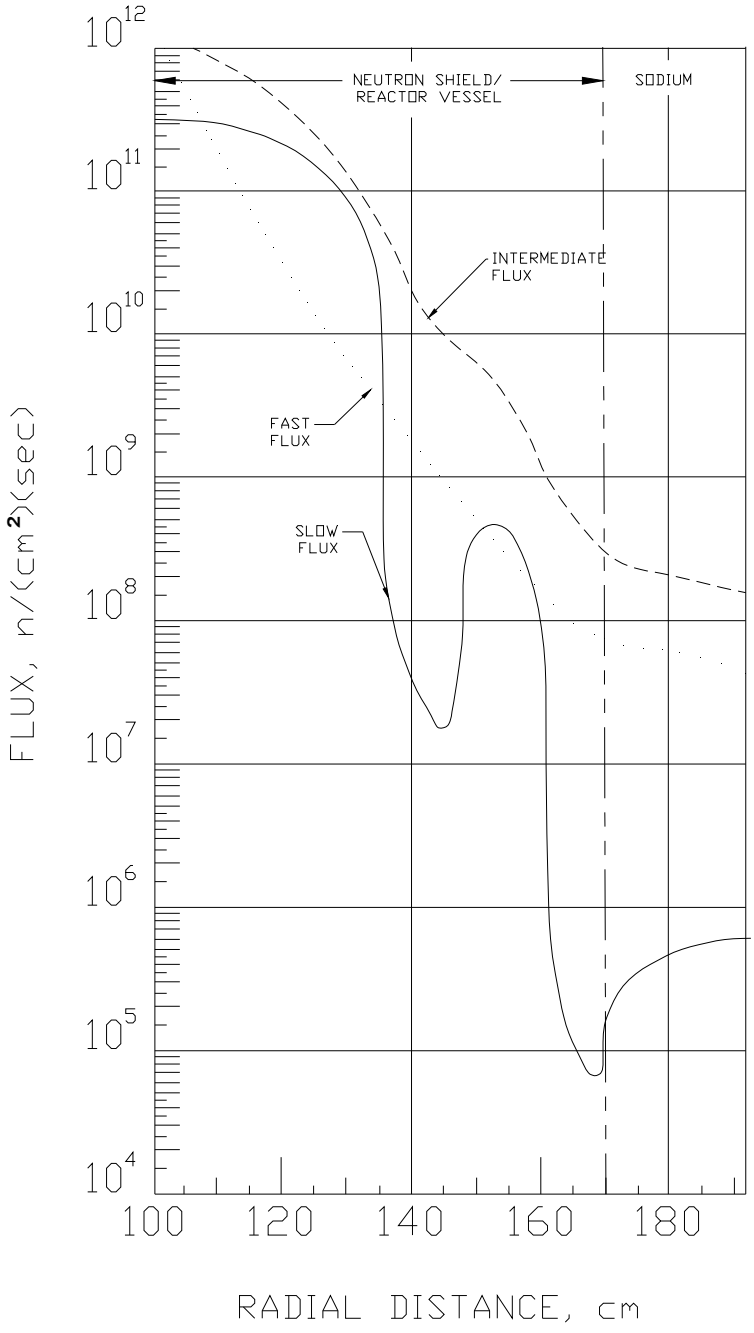

Figure 18. EBR-II Axial Neutron Flux, Above Core

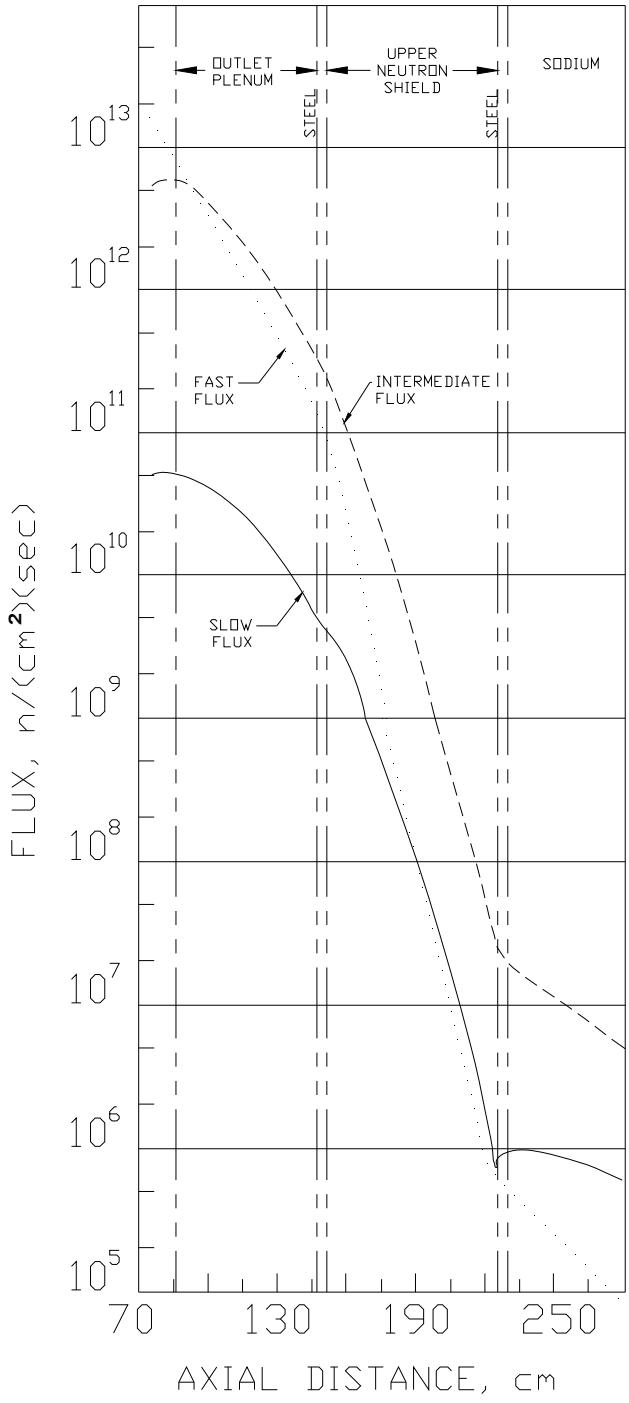

Figure 19. EBR-II Axial Neutron Flux, Below Core

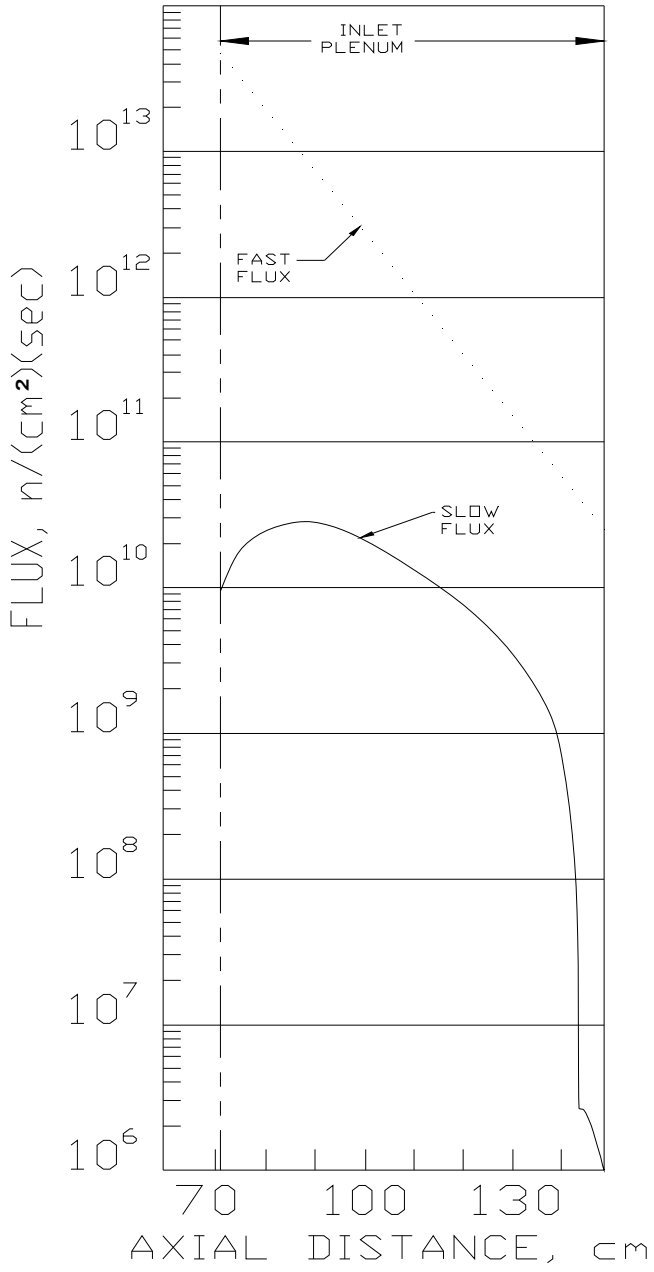

Figure 20. PWR Radial Neutron Flux

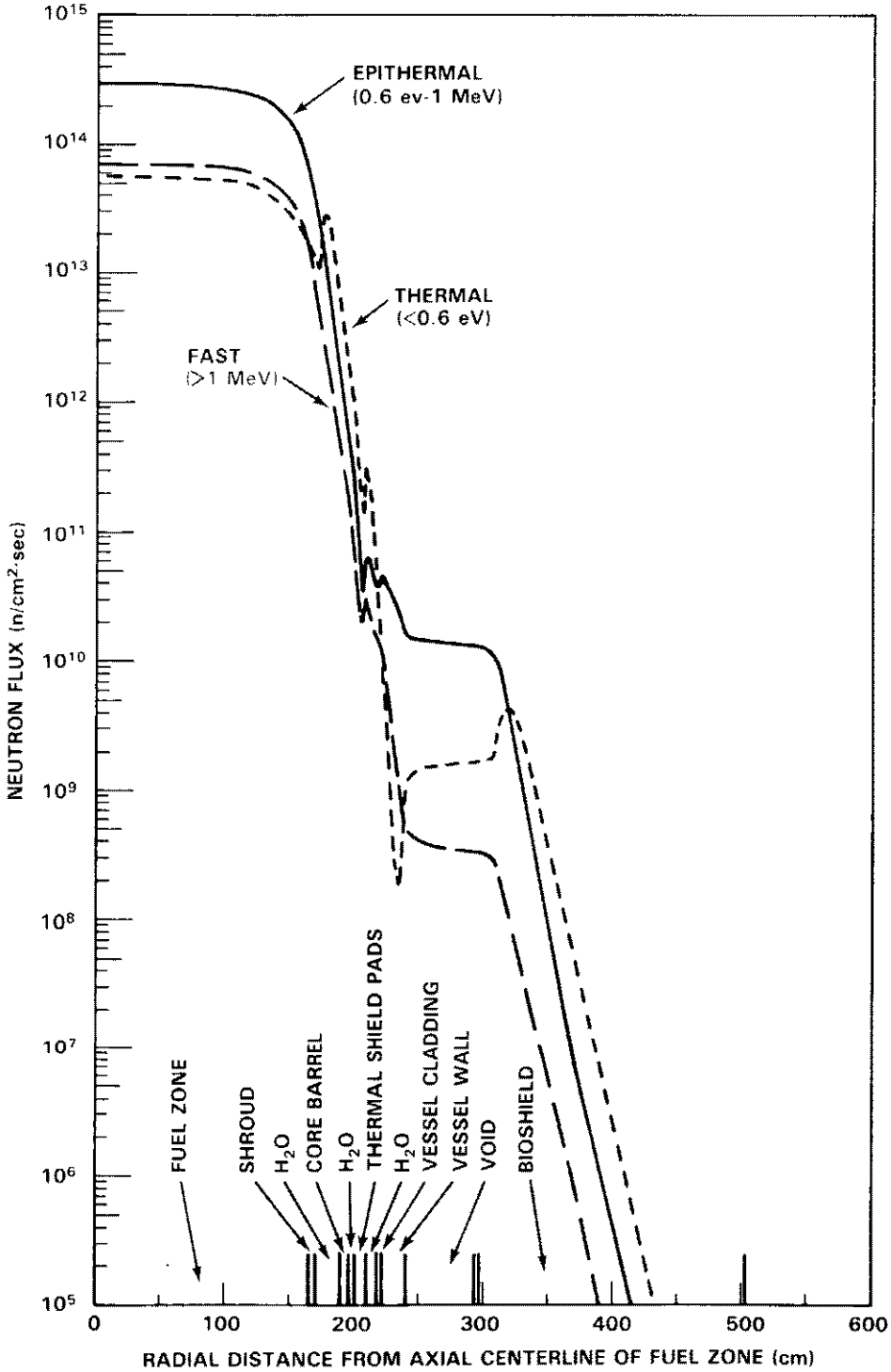
EPITHERMAL
(0.6 ev-1 MeV)
THERMAL
(<0.6 eV)
FAST
(>1 MeV)
NEUTRON FLUX (n/cm²·sec)
RADIAL DISTANCE FROM AXIAL CENTERLINE OF FUEL ZONE (cm)
FUEL ZONE
SHROUD
H₂O
CORE BARREL
H₂O
THERMAL SHIELD PADS
H₂O
VESSEL CLADDING
VESSEL WALL
VOID
BIOSHIELD

Structural components forming the EBR-II reactor were made from Type 304 stainless steel (304 SS), the guide tubes in the vessel cover were Stellite-6, and the neutron shields were formed from, primarily, graphite. 304 SS is a common metal in commercial reactors, including those documented in NUREG/CR-3474, and the test reactors at the INL including the Engineering Test Reactor (ETR), the Material Test Reactor (MTR) and the Power Burst Facility (PBF) reactor. The plain graphite used in the EBR-II neutron shield was selected, on the basis of similarity in chemistry and low boron content, from the graphite salvaged from the dismantled Chicago Pile reactor, CP-2 (Reference 1). The same grade of graphite (AGOT) manufactured by the same manufacturer (National Carbon Co.) was used in graphite blocks surrounding the MTR (Reference 13). The borated graphite was also manufactured by the National Carbon Co. to Argonne National Laboratory specifications. These specifications required that the basic coke flour used should conform with the vendor's standards for their AGSR-grade graphite (ash content – 0.30%). In addition, the finished product was to contain a minimum of 2.9 weight percent B_4C powder.

Stainless Steel Component Activity

The results of a post reactor shut down source term determination for the components forming a typical PWR that had operated for 30 effective full power years are documented in NUREG/CR-3474. The vessel cladding (formed from 304 SS) of this PWR was exposed to a neutron flux that was similar (in terms of the relationship between thermal and epithermal (0.5 eV to 1 MeV) neutron flux, with the epithermal flux over a magnitude greater than the thermal flux, to the neutron flux that the stainless steel items of the EBR-II reactor structure were exposed. The magnitude of the neutron flux through the components and the power history of EBR-II was different than the PWR mentioned above. Additionally the source term for the PWR was determined immediately following shut down while the EBR-II reactor has been shut down for 15 years. If, however, the activity of one radionuclide in the activated stainless steel components of EBR-II could be determined then the activity of this radionuclide could be scaled to the decayed PWR radionuclide activity values and a source term of the EBR-II components determined.

Ni-63 is an abundant radionuclide present in activated 304 SS and is by far the most abundant activation product in this material >30 years following reactor shutdown. Ni-63 is formed by the direct thermal neutron capture of nickel (Ni-62). The reasons that Ni-63 contributes such a large percentage of the decayed source term of this activated material are: 1) the half life of Ni-63 is relatively long at 100 years, 2) the relatively large amounts of nickel in 304 SS, and 3) the relatively high Ni-62 thermal cross section of 14.5 barns.

The following methodology and assumptions were used to calculate the Ni-63 activity in the components forming the EBR-II reactor:

- The number of Ni-63 atoms produced per gram of 304 SS in each component during each year of reactor operation was determined using the following equation:

$$N_2 = \frac{\phi N_1 \sigma_{a1}}{\lambda_{2T}}\left(1 - e^{-\lambda_{2T} t}\right) \qquad \text{Equation 1}$$

Where:

N_2 = Number of Ni-63 atoms produced;
φ = Thermal neutron flux, neutrons per cm^2 per second;
N_1 = Number of target Ni-62 atoms;
σ_{a1} = Activation cross section (barns, 1 barn = 1E-24 cm^2/atom);

λ_{2T} = Effective removal cross section;
t = time.

- N1 - The quantity of Ni-62 in 304 SS is 3.50E-03 grams of Ni-62 per gram 304 SS or 3.40E+19 atoms of Ni-62 per gram of 304 SS. This concentration value was obtained in EDF-6133 (Reference 14) which documents the source term for the ETR reactor and is based on the 304 SS used in the construction of the ATR reactor. Both the EBR-II and ATR reactors were built in the early 60's.
- φ - The thermal neutron flux thru each component forming the EBR-II reactor was taken from Figures 17 – 19 based on the distance of the component from the centerline of the reactor core.
- σ_{a1} – The thermal activation cross section for Ni-62 is 14.5 barns (Reference 15)
- λ_{2T} - The radioactive nuclei, once formed, are removed in a reactor by two processes: 1) Capture – the radioactive atom itself absorbs another neutron (for example Ni-63 absorbs a neutron and becomes Ni-64, which is a stable isotope), and 2) radioactive decay. The effective removal cross section is the sum of the probability of the removal of the activated radionuclide by capture and decay as shown in the following equation:

$$\lambda_{2T} = \lambda_2 + \phi\sigma_{a2} \qquad \text{Equation 2}$$

Where:

λ_2 = decay constant = LN(2)/half life (s^{-1})
φ = Thermal neutron flux, neutrons per cm^2 per second;
σ_{a2} = Activation cross section of the radioactive atom which, for Ni-63, is 24.4 barns (Reference 15);

- t – The irradiation time during each year of operation. The irradiation time for each year was determined from the EBR-II power history presented in Table 4. The time was calculated by dividing the power produced, in MW_tD, by the rated power of the reactor (62.5 MW_t) and converting the results to seconds. The rated power is used in this calculation since the neutron flux data presented in Figures 17 – 19 are based on full power operation. While this method of modeling the power history maximizes the neutron flux with the use of rated power, it underestimates the decay time that occurred during the year of operation (since the reactor did operate off and on throughout the year). Due to the long half life of Ni-63, this underestimation of decay time is negligible. An example of the irradiation time calculation for operation in the year 1966 is presented below:

$$t = \frac{7200 MW_t D}{62.5 MW_t} * \frac{86400 s}{D} = 9.95 * 10^6 s$$

Table 4. EBR-II Power History

Year(s)	History
1957	Construction of EBR-II started.
1961	EBR-II achieves criticality without sodium.
1963	EBR-II achieves "wet" criticality with sodium.
1964	First power supplied to NRTS Power grid. EBR-II power is raised to 37.5 MW (thermal) and produces 700 MW_tD.
1965	First irradiation experiments installed in core. EBR-II power is raised to 45 MW (thermal) and produces 4,340 MW_tD.
1966	EBR-II produces 7,200 MW_tD.
1967	EBR-II produces 3,300 MW_tD.
1968	EBR-II produces 7,000 MW_tD.
1969	EBR-II produces 7,900 MW_tD.
1970	EBR-II reconfigured to be test irradiation facility. Regular power operation at 62.5 MW (thermal). EBR-II produces 11,400 MW_tD.
1971	EBR-II produces 8,700 MW_tD.
1972	Operation with new radial stainless steel reflector started. EBR-II produces 10,700 MW_tD.
1973	EBR-II produces 11,600 MW_tD.
1974	EBR-II produces 13,300 MW_tD.
1975	EBR-II produces 14,760 MW_tD.
1976	EBR-II produces 18,100 MW_tD.
1977	EBR-II produces 16,400 MW_tD.
1978	EBR-II produces 16,500 MW_tD.
1979	EBR-II produces 16,000 MW_tD.
1980	EBR-II produces 16,300 MW_tD
1981	EBR-II produces 13,700 MW_tD.
1982	EBR-II produces 12,100 MW_tD.
1983	EBR-II produces 12,600 MW_tD.
1984	EBR-II produces 13,600 MW_tD.
1985	EBR-II produces 15,200 MW_tD.
1986	EBR-II produces 14,600 MW_tD.
1987	EBR-II produces 16,700 MW_tD.
1988	EBR-II produces 17,900 MW_tD.
1989	EBR-II produces 8,200 MW_tD.
1990	EBR-II produces 23,400 MW_tD.
1991	EBR-II produces 5,500 MW_tD.
1992	EBR-II produces 12,300 MW_tD.
1993	EBR-II produces 8,900 MW_tD.
1994	EBR-II produces 7,600 MW_tD. EBR-II is officially shut down on September 30, 1994.

- As shown in Figure 17, the neutron flux entering the inner neutron shielding is over 6 orders of magnitude greater than the neutron flux escaping through the outer neutron shield. The neutron flux continues to decrease as the flux passes through the bulk sodium. This limits the components that require an activation activity determination to only those components that form the reactor (the activation source term associated with other primary system components is negligible).
- Once the number of Ni-63 atoms produced per gram 304 SS for each component in each year of operation was determined, this number of atoms was "decayed" from the year they were produced to reactor shut down in 1994. This "decay" was calculated using the following equation that accounted for both radioactive decay and neutron capture:

$$N_{1994} = N_2 e^{(\lambda_2 t_d + \phi \sigma_{a2} t_i)} \qquad \text{Equation 3}$$

Where:

N_{1994} = Number of Ni-63 atoms remaining in 1994
t_d = Decay time, ~time (in seconds) from the end of the irradiation year to 1994.
t_i = Irradiation time – determined from the power history for the remaining years of operation.

All other terms as defined previously.

- Once the number of atoms of Ni-63 produced in each year of operation and "decayed" to 1994 was determined, the number of atoms were summed to give the total Ni-63 atoms per gram of 304 SS in 1994.
- The activity of Ni-63 per gram of 304 SS was then determined with the following equation:

$$A_{1994} = \lambda_2 N_{1994} \qquad \text{Equation 4}$$

Where:

A_{1994} = The activity of Ni-63 per gram of 304 SS

And all other terms were as defined previously.

- The 1994 Ni-63 activity per gram of 304 SS was then decayed to 2009. Since the reactor was now shut down and neutron capture was no longer occurring, the equation used to perform this calculation was as follows:

$$A_{2009} = A_{1994} e^{\lambda_2 t_d} \qquad \text{Equation 5}$$

- The results of these calculations are presented in Attachment A.
- The specific activity (in Ci/g 304 SS) data for the PWR vessel cladding documented in NUREG/CR-3474 were decayed 15 years to match the shut down time of EBR-II. These decayed results were then normalized to the specific activity of Ni-63. The results of these calculations are presented in Table 5.

Table 5. 304 SS Ni-63 Normalized Values

Radionuclide	$T_{1/2}$ (years)	PWR Cladding. Specific Activity (Ci/g)	PWR Cladding Decayed Specific Activity (Ci/g)	Ni-63 Normalized Values
H-3	1.23E+01	3.30E-07	1.42E-07	2.92E-03
C-14	5.72E+03	6.60E-08	6.59E-08	1.35E-03
Cl-36	3.01E+05	1.40E-09	1.40E-09	2.88E-05
Ca-41	1.02E+05	1.20E-11	1.20E-11	2.47E-07
Mn-53	3.74E+06	6.90E-12	6.90E-12	1.42E-07
Mn-54	8.55E-01	1.20E-05	6.24E-11	1.28E-06
Fe-55	2.73E+00	5.40E-04	1.20E-05	2.46E-01
Ni-59	7.60E+04	4.30E-07	4.30E-07	8.83E-03
Co-60	5.27E+00	3.30E-04	4.59E-05	9.43E-01
Ni-63	1.00E+02	5.40E-05	4.87E-05	1.00E+00
Zn-65	6.68E-01	9.90E-07	1.72E-13	3.54E-09
Se-79	6.50E+04	1.20E-12	1.20E-12	2.47E-08
Sr-90	2.91E+01	3.60E-10	2.52E-10	5.17E-06
Nb-92m	3.47E+07	2.00E-15	2.00E-15	4.11E-11
Zr-93	1.53E+06	8.60E-14	8.60E-14	1.77E-09
Mo-93	3.50E+03	1.10E-09	1.10E-09	2.25E-05
Nb-94	2.03E+04	7.50E-10	7.50E-10	1.54E-05
Tc-99	2.13E+05	2.40E-10	2.40E-10	4.93E-06
Ag-108m	4.18E+02	2.20E-10	2.15E-10	4.41E-06
Sn-121m	4.39E+01	1.10E-11	8.68E-12	1.78E-07
I-129	1.70E+07	1.10E-16	1.10E-16	2.26E-12
Ba-133	1.05E+01	7.10E-09	2.65E-09	5.44E-05
Cs-134	2.07E+00	2.30E-08	1.50E-10	3.07E-06
Cs-135	2.30E+06	7.80E-15	7.80E-15	1.60E-10
Cs-137	3.02E+01	4.20E-10	2.98E-10	6.12E-06
Pm-145	1.77E+01	3.10E-12	1.72E-12	3.54E-08
Sm-146	1.03E+08	4.30E-19	4.30E-19	8.84E-15
Sm-151	9.00E+01	5.90E-10	5.26E-10	1.08E-05
Eu-152	1.35E+01	7.60E-08	3.52E-08	7.23E-04
Eu-154	8.59E+00	1.20E-08	3.58E-09	7.35E-05
Eu-155	4.76E+00	5.20E-10	5.85E-11	1.20E-06
Tb-158	1.80E+02	5.60E-12	5.29E-12	1.09E-07
Ho-166m	1.20E+03	3.00E-10	2.97E-10	6.11E-06
Hf-178m	3.10E+01	1.20E-09	8.58E-10	1.76E-05
Pb-205	1.73E+07	3.40E-15	3.40E-15	6.99E-11
U-233	1.59E+05	3.40E-12	3.40E-12	6.99E-08
Pu-239	2.41E+04	9.60E-11	9.60E-11	1.97E-06

- The source term for the EBR-II vessel components was then calculated by multiplying the components Ni-63 specific activity by the Ni-63 normalized values presented in Table 5 and by the components mass. The mass values were calculated from the data provided in Reference 1 and the engineering drawings of the components.
- The results of these calculations are presented in Table 6.

Table 6. EBR-II Stainless Steel Component Activation Activity

Component	Inner Shield Wall	Inner Shield 1st Row Cans	Inner Shield 2nd Row Cans	Thermal Baffle	Vessel Wall
Volume (cm^3)	1.23E+05	8.91E+04	1.03E+05	1.22E+05	3.19E+05
Mass (g)	9.68E+05	7.04E+05	8.16E+05	9.62E+05	2.52E+06
Ni-63 Specific Activity (Ci/g)	3.88E-04	3.88E-04	3.88E-04	3.64E-04	3.04E-04
Radionuclide	Activity (Ci)	Activity (Ci)	Activity (Ci)	Activity (Ci)	Activity (Ci)
H-3	1.10E+00	7.98E-01	9.25E-01	1.02E+00	2.23E+00
C-14	5.09E-01	3.70E-01	4.29E-01	4.74E-01	1.03E+00
Cl-36	1.08E-02	7.86E-03	9.12E-03	1.01E-02	2.20E-02
Ca-41	9.27E-05	6.74E-05	7.82E-05	8.63E-05	1.88E-04
Mn-53	5.33E-05	3.88E-05	4.50E-05	4.96E-05	1.08E-04
Mn-54	4.82E-04	3.50E-04	4.06E-04	4.49E-04	9.80E-04
Fe-55	9.26E+01	6.73E+01	7.80E+01	8.62E+01	1.88E+02
Ni-59	3.32E+00	2.41E+00	2.80E+00	3.09E+00	6.75E+00
Co-60	3.55E+02	2.58E+02	2.99E+02	3.30E+02	7.21E+02
Ni-63	3.76E+02	2.73E+02	3.17E+02	3.50E+02	7.65E+02
Zn-65	1.33E-06	9.67E-07	1.12E-06	1.24E-06	2.70E-06
Se-79	9.27E-06	6.74E-06	7.82E-06	8.63E-06	1.88E-05
Sr-90	1.95E-03	1.41E-03	1.64E-03	1.81E-03	3.96E-03
Nb-92m	1.55E-08	1.12E-08	1.30E-08	1.44E-08	3.14E-08
Zr-93	6.65E-07	4.83E-07	5.60E-07	6.19E-07	1.35E-06
Mo-93	8.47E-03	6.16E-03	7.15E-03	7.89E-03	1.72E-02
Nb-94	5.79E-03	4.21E-03	4.88E-03	5.39E-03	1.18E-02
Tc-99	1.85E-03	1.35E-03	1.56E-03	1.73E-03	3.77E-03
Ag-108m	1.66E-03	1.21E-03	1.40E-03	1.54E-03	3.37E-03
Sn-121m	6.71E-05	4.88E-05	5.66E-05	6.24E-05	1.36E-04
I-129	8.50E-10	6.18E-10	7.17E-10	7.91E-10	1.73E-09
Ba-133	2.04E-02	1.49E-02	1.72E-02	1.90E-02	4.16E-02
Cs-134	1.16E-03	8.41E-04	9.75E-04	1.08E-03	2.35E-03
Cs-135	6.03E-08	4.38E-08	5.08E-08	5.61E-08	1.23E-07
Cs-137	2.30E-03	1.67E-03	1.94E-03	2.14E-03	4.68E-03
Pm-145	1.33E-05	9.68E-06	1.12E-05	1.24E-05	2.71E-05
Sm-146	3.32E-12	2.42E-12	2.80E-12	3.09E-12	6.76E-12
Sm-151	4.06E-03	2.95E-03	3.42E-03	3.78E-03	8.26E-03
Eu-152	2.72E-01	1.98E-01	2.29E-01	2.53E-01	5.53E-01
Eu-154	2.76E-02	2.01E-02	2.33E-02	2.57E-02	5.62E-02
Eu-155	4.52E-04	3.29E-04	3.81E-04	4.21E-04	9.19E-04
Tb-158	4.08E-05	2.97E-05	3.44E-05	3.80E-05	8.30E-05
Ho-166m	2.30E-03	1.67E-03	1.94E-03	2.14E-03	4.67E-03
Hf-178m	6.63E-03	4.82E-03	5.59E-03	6.17E-03	1.35E-02
Pb-205	2.63E-08	1.91E-08	2.22E-08	2.45E-08	5.34E-08
U-233	2.63E-05	1.91E-05	2.22E-05	2.45E-05	5.34E-05
Pu-239	7.42E-04	5.39E-04	6.25E-04	6.90E-04	1.51E-03
Total	8.29E+02	6.02E+02	6.99E+02	7.71E+02	1.68E+03

Table 6. EBR-II Stainless Steel Component Activation Activity (Continued)

Component	Shield Liner	Outer Shield 1st Row Cans	Outer Shield 2nd Row Cans	Outer Shield 3rd Row Cans	Outer Shield 4th Row Cans
Volume (cm^3)	1.91E+05	2.28E+06	2.47E+06	2.86E+06	2.87E+06
Mass (g)	1.51E+06	1.80E+07	1.95E+07	2.26E+07	2.27E+07
Ni-63 Specific Activity (Ci/g)	2.79E-04	1.70E-04	6.69E-08	4.26E-07	4.01E-09
Radionuclide	Activity (Ci)	Activity (Ci)	Activity (Ci)	Activity (Ci)	Activity (Ci)
H-3	1.23E+00	8.93E+00	3.81E-03	2.81E-02	2.65E-04
C-14	5.69E-01	4.14E+00	1.77E-03	1.30E-02	1.23E-04
Cl-36	1.21E-02	8.80E-02	3.75E-05	2.77E-04	2.62E-06
Ca-41	1.04E-04	7.54E-04	3.22E-07	2.37E-06	2.24E-08
Mn-53	5.96E-05	4.34E-04	1.85E-07	1.36E-06	1.29E-08
Mn-54	5.39E-04	3.92E-03	1.67E-06	1.23E-05	1.17E-07
Fe-55	1.04E+02	7.53E+02	3.21E-01	2.37E+00	2.24E-02
Ni-59	3.72E+00	2.70E+01	1.15E-02	8.49E-02	8.03E-04
Co-60	3.97E+02	2.88E+03	1.23E+00	9.07E+00	8.57E-02
Ni-63	4.21E+02	3.06E+03	1.30E+00	9.61E+00	9.09E-02
Zn-65	1.49E-06	1.08E-05	4.61E-09	3.40E-08	3.22E-10
Se-79	1.04E-05	7.54E-05	3.22E-08	2.37E-07	2.24E-09
Sr-90	2.18E-03	1.58E-02	6.75E-06	4.98E-05	4.71E-07
Nb-92m	1.73E-08	1.26E-07	5.36E-11	3.95E-10	3.74E-12
Zr-93	7.43E-07	5.41E-06	2.30E-09	1.70E-08	1.61E-10
Mo-93	9.48E-03	6.89E-02	2.94E-05	2.17E-04	2.05E-06
Nb-94	6.48E-03	4.71E-02	2.01E-05	1.48E-04	1.40E-06
Tc-99	2.07E-03	1.51E-02	6.43E-06	4.74E-05	4.48E-07
Ag-108m	1.85E-03	1.35E-02	5.75E-06	4.24E-05	4.01E-07
Sn-121m	7.50E-05	5.46E-04	2.33E-07	1.71E-06	1.62E-08
I-129	9.51E-10	6.91E-09	2.95E-12	2.17E-11	2.06E-13
Ba-133	2.29E-02	1.66E-01	7.09E-05	5.23E-04	4.94E-06
Cs-134	1.29E-03	9.41E-03	4.01E-06	2.96E-05	2.80E-07
Cs-135	6.74E-08	4.90E-07	2.09E-10	1.54E-09	1.46E-11
Cs-137	2.57E-03	1.87E-02	7.98E-06	5.88E-05	5.56E-07
Pm-145	1.49E-05	1.08E-04	4.62E-08	3.40E-07	3.22E-09
Sm-146	3.72E-12	2.70E-11	1.15E-14	8.50E-14	8.03E-16
Sm-151	4.54E-03	3.30E-02	1.41E-05	1.04E-04	9.82E-07
Eu-152	3.04E-01	2.21E+00	9.43E-04	6.95E-03	6.57E-05
Eu-154	3.09E-02	2.25E-01	9.58E-05	7.07E-04	6.68E-06
Eu-155	5.06E-04	3.68E-03	1.57E-06	1.16E-05	1.09E-07
Tb-158	4.57E-05	3.32E-04	1.42E-07	1.04E-06	9.88E-09
Ho-166m	2.57E-03	1.87E-02	7.97E-06	5.88E-05	5.56E-07
Hf-178m	7.42E-03	5.39E-02	2.30E-05	1.70E-04	1.60E-06
Pb-205	2.94E-08	2.14E-07	9.11E-11	6.72E-10	6.35E-12
U-233	2.94E-05	2.14E-04	9.11E-08	6.72E-07	6.35E-09
Pu-239	8.29E-04	6.03E-03	2.57E-06	1.90E-05	1.79E-07
Total	9.27E+02	6.74E+03	2.87E+00	2.12E+01	2.00E-01

Table 6. EBR-II Stainless Steel Component Activation Activity (Continued)

Component	Outer Shield 5th Row Cans	Upper Flow Baffle/Hold-down Fingers	Thermal Shield	Closure Head Lower Surface	Upper Neutron Shield 1st Row Can
Volume (cm^3)	3.22E+06	5.35E+05	1.07E+05	1.07E+05	4.89E+04
Mass (g)	2.54E+07	4.23E+06	8.42E+05	8.42E+05	3.86E+05
Ni-63 Specific Activity (Ci/g)	4.26E-09	4.26E-05	4.86E-06	3.65E-06	3.04E-06
Radionuclide	Activity (Ci)	Activity (Ci)	Activity (Ci)	Activity (Ci)	Activity (Ci)
H-3	3.16E-04	5.25E-01	1.19E-02	8.96E-03	3.42E-03
C-14	1.46E-04	2.43E-01	5.54E-03	4.16E-03	1.59E-03
Cl-36	3.11E-06	5.17E-03	1.18E-04	8.84E-05	3.38E-05
Ca-41	2.67E-08	4.43E-05	1.01E-06	7.57E-07	2.89E-07
Mn-53	1.53E-08	2.55E-05	5.81E-07	4.35E-07	1.66E-07
Mn-54	1.39E-07	2.30E-04	5.25E-06	3.94E-06	1.50E-06
Fe-55	2.66E-02	4.43E+01	1.01E+00	7.56E-01	2.89E-01
Ni-59	9.56E-04	1.59E+00	3.62E-02	2.71E-02	1.04E-02
Co-60	1.02E-01	1.70E+02	3.86E+00	2.90E+00	1.11E+00
Ni-63	1.08E-01	1.80E+02	4.10E+00	3.07E+00	1.17E+00
Zn-65	3.83E-10	6.36E-07	1.45E-08	1.09E-08	4.15E-09
Se-79	2.67E-09	4.43E-06	1.01E-07	7.57E-08	2.89E-08
Sr-90	5.60E-07	9.31E-04	2.12E-05	1.59E-05	6.07E-06
Nb-92m	4.45E-12	7.39E-09	1.68E-10	1.26E-10	4.82E-11
Zr-93	1.91E-10	3.18E-07	7.24E-09	5.43E-09	2.07E-09
Mo-93	2.44E-06	4.05E-03	9.23E-05	6.92E-05	2.64E-05
Nb-94	1.67E-06	2.77E-03	6.31E-05	4.73E-05	1.81E-05
Tc-99	5.33E-07	8.87E-04	2.02E-05	1.51E-05	5.79E-06
Ag-108m	4.77E-07	7.93E-04	1.81E-05	1.35E-05	5.17E-06
Sn-121m	1.93E-08	3.21E-05	7.30E-07	5.48E-07	2.09E-07
I-129	2.45E-13	4.06E-10	9.26E-12	6.94E-12	2.65E-12
Ba-133	5.88E-06	9.77E-03	2.23E-04	1.67E-04	6.38E-05
Cs-134	3.33E-07	5.53E-04	1.26E-05	9.44E-06	3.61E-06
Cs-135	1.73E-11	2.88E-08	6.56E-10	4.92E-10	1.88E-10
Cs-137	6.62E-07	1.10E-03	2.50E-05	1.88E-05	7.18E-06
Pm-145	3.83E-09	6.37E-06	1.45E-07	1.09E-07	4.15E-08
Sm-146	9.56E-16	1.59E-12	3.62E-14	2.71E-14	1.04E-14
Sm-151	1.17E-06	1.94E-03	4.42E-05	3.32E-05	1.27E-05
Eu-152	7.82E-05	1.30E-01	2.96E-03	2.22E-03	8.48E-04
Eu-154	7.95E-06	1.32E-02	3.01E-04	2.26E-04	8.63E-05
Eu-155	1.30E-07	2.16E-04	4.93E-06	3.69E-06	1.41E-06
Tb-158	1.17E-08	1.95E-05	4.45E-07	3.34E-07	1.27E-07
Ho-166m	6.61E-07	1.10E-03	2.50E-05	1.88E-05	7.17E-06
Hf-178m	1.91E-06	3.17E-03	7.22E-05	5.42E-05	2.07E-05
Pb-205	7.56E-12	1.26E-08	2.86E-10	2.15E-10	8.20E-11
U-233	7.56E-09	1.26E-05	2.86E-07	2.15E-07	8.20E-08
Pu-239	2.13E-07	3.55E-04	8.07E-06	6.06E-06	2.31E-06
Total	2.38E-01	3.96E+02	9.02E+00	6.77E+00	2.59E+00

Table 6. EBR-II Stainless Steel Component Activation Activity (Continued)

Component	Upper Neutron Shield 2nd Row Can	Upper Neutron Shield 3rd Row Can	Upper Neutron Shield 4th Row Can	Upper Neutron Shield 5th Row Can	Upper Neutron Shield 6th Row Can
Volume (cm^3)	4.89E+04	4.89E+04	4.89E+04	4.89E+04	4.89E+04
Mass (g)	3.86E+05	3.86E+05	3.86E+05	3.86E+05	3.86E+05
Ni-63 Specific Activity (Ci/g)	1.22E-06	3.04E-07	9.73E-08	1.82E-08	4.86E-09
Radionuclide	Activity (Ci)	Activity (Ci)	Activity (Ci)	Activity (Ci)	Activity (Ci)
H-3	1.37E-03	3.42E-04	1.10E-04	2.05E-05	5.48E-06
C-14	6.35E-04	1.59E-04	5.08E-05	9.53E-06	2.54E-06
Cl-36	1.35E-05	3.38E-06	1.08E-06	2.03E-07	5.40E-08
Ca-41	1.16E-07	2.89E-08	9.26E-09	1.74E-09	4.63E-10
Mn-53	6.66E-08	1.66E-08	5.32E-09	9.98E-10	2.66E-10
Mn-54	6.01E-07	1.50E-07	4.81E-08	9.02E-09	2.41E-09
Fe-55	1.16E-01	2.89E-02	9.24E-03	1.73E-03	4.62E-04
Ni-59	4.15E-03	1.04E-03	3.32E-04	6.22E-05	1.66E-05
Co-60	4.43E-01	1.11E-01	3.54E-02	6.64E-03	1.77E-03
Ni-63	4.69E-01	1.17E-01	3.76E-02	7.04E-03	1.88E-03
Zn-65	1.66E-09	4.15E-10	1.33E-10	2.49E-11	6.64E-12
Se-79	1.16E-08	2.89E-09	9.26E-10	1.74E-10	4.63E-11
Sr-90	2.43E-06	6.07E-07	1.94E-07	3.64E-08	9.72E-09
Nb-92m	1.93E-11	4.82E-12	1.54E-12	2.89E-13	7.72E-14
Zr-93	8.29E-10	2.07E-10	6.64E-11	1.24E-11	3.32E-12
Mo-93	1.06E-05	2.64E-06	8.46E-07	1.59E-07	4.23E-08
Nb-94	7.23E-06	1.81E-06	5.78E-07	1.08E-07	2.89E-08
Tc-99	2.31E-06	5.79E-07	1.85E-07	3.47E-08	9.26E-09
Ag-108m	2.07E-06	5.17E-07	1.66E-07	3.10E-08	8.28E-09
Sn-121m	8.37E-08	2.09E-08	6.70E-09	1.26E-09	3.35E-10
I-129	1.06E-12	2.65E-13	8.49E-14	1.59E-14	4.24E-15
Ba-133	2.55E-05	6.38E-06	2.04E-06	3.83E-07	1.02E-07
Cs-134	1.44E-06	3.61E-07	1.15E-07	2.17E-08	5.77E-09
Cs-135	7.52E-11	1.88E-11	6.02E-12	1.13E-12	3.01E-13
Cs-137	2.87E-06	7.18E-07	2.30E-07	4.31E-08	1.15E-08
Pm-145	1.66E-08	4.15E-09	1.33E-09	2.49E-10	6.65E-11
Sm-146	4.15E-15	1.04E-15	3.32E-16	6.22E-17	1.66E-17
Sm-151	5.07E-06	1.27E-06	4.06E-07	7.60E-08	2.03E-08
Eu-152	3.39E-04	8.48E-05	2.71E-05	5.09E-06	1.36E-06
Eu-154	3.45E-05	8.63E-06	2.76E-06	5.18E-07	1.38E-07
Eu-155	5.65E-07	1.41E-07	4.52E-08	8.47E-09	2.26E-09
Tb-158	5.10E-08	1.27E-08	4.08E-09	7.65E-10	2.04E-10
Ho-166m	2.87E-06	7.17E-07	2.29E-07	4.30E-08	1.15E-08
Hf-178m	8.28E-06	2.07E-06	6.62E-07	1.24E-07	3.31E-08
Pb-205	3.28E-11	8.20E-12	2.62E-12	4.92E-13	1.31E-13
U-233	3.28E-08	8.20E-09	2.62E-09	4.92E-10	1.31E-10
Pu-239	9.26E-07	2.31E-07	7.40E-08	1.39E-08	3.70E-09
Total	1.03E+00	2.59E-01	8.27E-02	1.55E-02	4.14E-03

Table 6. EBR-II Stainless Steel Component Activation Activity (Continued)

Component	Closure Head Body Cylindrical Surface	Closure Head Top	Upper Grid Plate	Interconnecting Tubes	High Pressure Coolant Baffle
Volume (cm^3)	2.24E+05	1.43E+05	3.34E+05	1.93E+05	2.30E+04
Mass (g)	1.77E+06	1.13E+06	5.34E+05	1.52E+06	1.81E+05
Ni-63 Specific Activity (Ci/g)	1.22E-07	1.09E-09	2.43E-05	3.53E-05	3.53E-05
Radionuclide	Activity (Ci)	Activity (Ci)	Activity (Ci)	Activity (Ci)	Activity (Ci)
H-3	6.29E-04	3.61E-06	3.79E-02	1.57E-01	1.87E-02
C-14	2.92E-04	1.68E-06	1.76E-02	7.27E-02	8.66E-03
Cl-36	6.20E-06	3.56E-08	3.74E-04	1.54E-03	1.84E-04
Ca-41	5.32E-08	3.05E-10	3.20E-06	1.32E-05	1.58E-06
Mn-53	3.06E-08	1.75E-10	1.84E-06	7.61E-06	9.07E-07
Mn-54	2.76E-07	1.59E-09	1.66E-05	6.88E-05	8.20E-06
Fe-55	5.31E-02	3.05E-04	3.20E+00	1.32E+01	1.57E+00
Ni-59	1.90E-03	1.09E-05	1.15E-01	4.74E-01	5.65E-02
Co-60	2.03E-01	1.17E-03	1.22E+01	5.06E+01	6.03E+00
Ni-63	2.16E-01	1.24E-03	1.30E+01	5.37E+01	6.40E+00
Zn-65	7.63E-10	4.38E-12	4.60E-08	1.90E-07	2.26E-08
Se-79	5.32E-09	3.05E-11	3.20E-07	1.32E-06	1.58E-07
Sr-90	1.12E-06	6.40E-09	6.72E-05	2.78E-04	3.31E-05
Nb-92m	8.86E-12	5.09E-14	5.34E-10	2.21E-09	2.63E-10
Zr-93	3.81E-10	2.19E-12	2.30E-08	9.48E-08	1.13E-08
Mo-93	4.86E-06	2.79E-08	2.93E-04	1.21E-03	1.44E-04
Nb-94	3.32E-06	1.91E-08	2.00E-04	8.27E-04	9.85E-05
Tc-99	1.06E-06	6.10E-09	6.41E-05	2.65E-04	3.15E-05
Ag-108m	9.51E-07	5.46E-09	5.73E-05	2.37E-04	2.82E-05
Sn-121m	3.85E-08	2.21E-10	2.32E-06	9.57E-06	1.14E-06
I-129	4.87E-13	2.80E-15	2.94E-11	1.21E-10	1.45E-11
Ba-133	1.17E-05	6.73E-08	7.06E-04	2.92E-03	3.48E-04
Cs-134	6.63E-07	3.81E-09	3.99E-05	1.65E-04	1.97E-05
Cs-135	3.46E-11	1.98E-13	2.08E-09	8.60E-09	1.03E-09
Cs-137	1.32E-06	7.57E-09	7.95E-05	3.28E-04	3.91E-05
Pm-145	7.63E-09	4.38E-11	4.60E-07	1.90E-06	2.26E-07
Sm-146	1.90E-15	1.09E-17	1.15E-13	4.74E-13	5.65E-14
Sm-151	2.33E-06	1.34E-08	1.40E-04	5.80E-04	6.91E-05
Eu-152	1.56E-04	8.95E-07	9.39E-03	3.88E-02	4.62E-03
Eu-154	1.58E-05	9.10E-08	9.55E-04	3.94E-03	4.70E-04
Eu-155	2.59E-07	1.49E-09	1.56E-05	6.45E-05	7.69E-06
Tb-158	2.34E-08	1.34E-10	1.41E-06	5.83E-06	6.95E-07
Ho-166m	1.32E-06	7.56E-09	7.94E-05	3.28E-04	3.91E-05
Hf-178m	3.80E-06	2.18E-08	2.29E-04	9.46E-04	1.13E-04
Pb-205	1.51E-11	8.65E-14	9.08E-10	3.75E-09	4.47E-10
U-233	1.51E-08	8.65E-11	9.07E-07	3.75E-06	4.47E-07
Pu-239	4.25E-07	2.44E-09	2.56E-05	1.06E-04	1.26E-05
Total	4.75E-01	2.73E-03	2.86E+01	1.18E+02	1.41E+01

Table 6. EBR-II Stainless Steel Component Activation Activity (Continued)

Component	Safety Rod Adapters	Lower Grid Plate/Plenum Wall	Low Pressure Baffle/Plenum Inner Wall	Low Pressure Plenum Bottom Plate	Vessel Leveling Plate
Volume (cm^3)	1.38E+03	4.76E+05	7.42E+04	8.63E+04	1.73E+05
Mass (g)	1.09E+04	3.76E+06	5.86E+05	6.82E+05	1.36E+06
Ni-63 Specific Activity (Ci/g)	3.53E-05	2.55E-05	6.69E-06	3.65E-08	3.65E-09
Radionuclide	Activity (Ci)	Activity (Ci)	Activity (Ci)	Activity (Ci)	Activity (Ci)
H-3	1.12E-03	2.80E-01	1.14E-02	7.25E-05	1.45E-05
C-14	5.22E-04	1.30E-01	5.30E-03	3.37E-05	6.73E-06
Cl-36	1.11E-05	2.76E-03	1.13E-04	7.15E-07	1.43E-07
Ca-41	9.50E-08	2.37E-05	9.66E-07	6.13E-09	1.23E-09
Mn-53	5.47E-08	1.36E-05	5.56E-07	3.52E-09	7.05E-10
Mn-54	4.94E-07	1.23E-04	5.02E-06	3.19E-08	6.37E-09
Fe-55	9.49E-02	2.36E+01	9.64E-01	6.12E-03	1.22E-03
Ni-59	3.41E-03	8.48E-01	3.46E-02	2.20E-04	4.39E-05
Co-60	3.63E-01	9.05E+01	3.69E+00	2.34E-02	4.69E-03
Ni-63	3.85E-01	9.60E+01	3.92E+00	2.49E-02	4.97E-03
Zn-65	1.36E-09	3.39E-07	1.39E-08	8.80E-11	1.76E-11
Se-79	9.50E-09	2.37E-06	9.66E-08	6.13E-10	1.23E-10
Sr-90	1.99E-06	4.97E-04	2.03E-05	1.29E-07	2.57E-08
Nb-92m	1.58E-11	3.94E-09	1.61E-10	1.02E-12	2.04E-13
Zr-93	6.81E-10	1.70E-07	6.92E-09	4.39E-11	8.79E-12
Mo-93	8.69E-06	2.16E-03	8.83E-05	5.60E-07	1.12E-07
Nb-94	5.94E-06	1.48E-03	6.04E-05	3.83E-07	7.66E-08
Tc-99	1.90E-06	4.73E-04	1.93E-05	1.23E-07	2.45E-08
Ag-108m	1.70E-06	4.23E-04	1.73E-05	1.10E-07	2.19E-08
Sn-121m	6.88E-08	1.71E-05	6.99E-07	4.43E-09	8.87E-10
I-129	8.71E-13	2.17E-10	8.86E-12	5.62E-14	1.12E-14
Ba-133	2.10E-05	5.22E-03	2.13E-04	1.35E-06	2.70E-07
Cs-134	1.19E-06	2.95E-04	1.20E-05	7.64E-08	1.53E-08
Cs-135	6.18E-11	1.54E-08	6.28E-10	3.98E-12	7.97E-13
Cs-137	2.36E-06	5.87E-04	2.40E-05	1.52E-07	3.04E-08
Pm-145	1.36E-08	3.40E-06	1.39E-07	8.80E-10	1.76E-10
Sm-146	3.41E-15	8.48E-13	3.46E-14	2.20E-16	4.39E-17
Sm-151	4.16E-06	1.04E-03	4.23E-05	2.69E-07	5.37E-08
Eu-152	2.79E-04	6.94E-02	2.83E-03	1.80E-05	3.59E-06
Eu-154	2.83E-05	7.05E-03	2.88E-04	1.83E-06	3.65E-07
Eu-155	4.64E-07	1.15E-04	4.71E-06	2.99E-08	5.98E-09
Tb-158	4.19E-08	1.04E-05	4.26E-07	2.70E-09	5.40E-10
Ho-166m	2.36E-06	5.86E-04	2.39E-05	1.52E-07	3.04E-08
Hf-178m	6.80E-06	1.69E-03	6.91E-05	4.38E-07	8.77E-08
Pb-205	2.69E-11	6.70E-09	2.74E-10	1.74E-12	3.47E-13
U-233	2.69E-08	6.70E-06	2.74E-07	1.74E-09	3.47E-10
Pu-239	7.60E-07	1.89E-04	7.73E-06	4.90E-08	9.80E-09
Total	8.49E-01	2.11E+02	8.63E+00	5.48E-02	1.10E-02

Graphite Activity

The methodology used to calculate the source term associated with the graphite in the radial and axial neutron shields was similar to that used for the activated 304 SS components with the following exceptions:

- It was assumed that the composition of the EBR-II graphite is identical to the graphite used in the MTR reflector. This is a reasonable assumption since both were manufactured by the same company with the same specifications for allowable ash content.
- The quantity of Ni-62 in MTR graphite is 2.80E-08 grams of Ni-62 per gram of graphite (EDF-6381 Table A-5) or 2.72E+14 atoms of Ni-62 per gram of graphite.
- The results of the Ni-63 calculations for each layer of the radial and axial neutron shields are presented in Attachment B
- The activity data for the MTR graphite presented in EDF-6381 was determined based on a reactor shutdown time of 35 years (1970 to 2005). The specific activity values calculated from the EDF-6381 data were reverse decayed 20 years and then normalized to Ni-63. The results of these calculations are presented in Table 7.
- The source term for the various layers of the EBR-II neutron shield was then calculated by multiplying the layer's Ni-63 specific activity by the Ni-63 normalized values presented in Table 7 and by the graphite mass in the layer. The mass values were calculated from the data provided in Reference 1 and the engineering drawings of the shields.
- The results of these calculations are presented in Table 8.

Table 7. Graphite Ni-63 Normalized Values

Radionuclide	$T_{1/2}$ (years)	MTR Graphite Specific Activity (Ci/g)	MTR Graphite Reverse Decayed Specific Activity (Ci/g)	Ni-63 Graphite Normalized Values
H-3	1.23E+01	2.99E-10	9.21E-10	5.74E-02
Be-10	1.52E+06	5.85E-10	5.85E-10	3.65E-02
C-14	5.72E+03	1.08E-07	1.09E-07	6.77E+00
Cl-36	3.01E+05	1.05E-09	1.05E-09	6.57E-02
Mn-54	8.55E-01	1.11E-20	1.23E-13	7.70E-06
Ni-59	7.60E+04	1.31E-10	1.31E-10	8.17E-03
Co-60	5.27E+00	6.10E-08	8.46E-07	5.28E+01
Ni-63	1.00E+02	1.40E-08	1.60E-08	1.00E+00
Zn-65	6.68E-01	9.59E-24	9.88E-15	6.16E-07
Sr-90	2.91E+01	3.54E-09	5.70E-09	3.56E-01
Nb-94	2.03E+04	6.10E-10	6.10E-10	3.80E-02
Tc-99	2.13E+05	4.22E-13	4.22E-13	2.63E-05
Ru-106	1.01E+00	1.20E-18	1.12E-12	7.00E-05
Ag-108m	4.18E+02	7.76E-09	8.02E-09	5.00E-01
Ag-110m	6.84E-01	1.23E-22	7.83E-14	4.88E-06
Sb-125	2.77E+00	3.15E-12	4.70E-10	2.93E-02
I-129	1.70E+07	7.85E-15	7.85E-15	4.90E-07
Cs-134	2.07E+00	6.24E-11	5.14E-08	3.20E+00
Cs-137	3.02E+01	7.64E-09	1.21E-08	7.54E-01
Ce-144	7.79E-01	1.03E-21	5.49E-14	3.42E-06
Eu-152	1.35E+01	3.29E-08	9.18E-08	5.72E+00
Eu-154	8.59E+00	5.40E-08	2.71E-07	1.69E+01
Pb-210	2.23E+01	6.89E-19	1.29E-18	8.01E-11
Ra-226	1.60E+03	1.75E-18	1.76E-18	1.10E-10
Ac-227	2.16E+01	1.59E-14	3.01E-14	1.88E-06
Th-228	1.91E+00	8.32E-13	1.17E-09	7.32E-02
Th-229	7.34E+03	2.28E-14	2.28E-14	1.42E-06
Th-230	7.70E+04	1.45E-16	1.45E-16	9.06E-09
Pa-231	3.28E+04	2.12E-14	2.12E-14	1.32E-06
Th-232	1.41E+10	5.40E-15	5.40E-15	3.37E-07
U-232	7.20E+01	8.04E-13	9.75E-13	6.08E-05
U-233	1.59E+05	5.48E-12	5.48E-12	3.42E-04
U-234	2.45E+05	2.75E-13	2.75E-13	1.72E-05
U-235	7.04E+08	5.02E-15	5.02E-15	3.13E-07
U-236	2.34E+06	1.71E-14	1.71E-14	1.07E-06
Np-237	2.14E+06	1.80E-14	1.80E-14	1.13E-06
U-238	4.47E+09	1.79E-13	1.79E-13	1.11E-05
Pu-238	8.77E+01	1.45E-10	1.70E-10	1.06E-02
Pu-239	2.41E+04	6.16E-10	6.17E-10	3.85E-02
Pu-240	6.56E+03	3.43E-10	3.44E-10	2.14E-02
Pu-241	1.43E+01	7.08E-09	1.87E-08	1.16E+00
Pu-242	3.76E+05	1.54E-13	1.54E-13	9.59E-06
Pu-244	8.26E+07	5.11E-22	5.11E-22	3.19E-14
Am-241	4.33E+02	1.28E-09	1.32E-09	8.26E-02
Am-243	7.37E+03	2.23E-13	2.24E-13	1.39E-05
Cm-243	2.91E+01	1.91E-13	3.07E-13	1.92E-05
Cm-244	1.81E+01	1.71E-12	3.68E-12	2.29E-04
Cm-245	8.48E+03	1.29E-16	1.29E-16	8.07E-09
Cm-246	4.76E+03	9.13E-18	9.15E-18	5.71E-10
Cm-247	1.56E+07	4.99E-24	4.99E-24	3.11E-16
Cm-248	3.48E+05	2.50E-24	2.50E-24	1.56E-16

Table 8. EBR-II Graphite Component Activation Activity

Component	Inner Shield 1st Row Graphite	Inner Shield 2nd Row Graphite	Outer Shield 1st Row Graphite	Outer Shield 2nd Row Graphite	Outer Shield 3rd Row Graphite
Volume (cm^3)	7.11E+05	8.25E+05	2.36E+06	2.53E+06	2.98E+06
Mass (g)	1.14E+06	1.32E+06	3.77E+06	4.04E+06	4.76E+06
Ni-63 Specific Activity(Ci/g)	3.11E-09	3.11E-09	1.36E-09	5.36E-13	3.41E-12
Radionuclide	Activity (Ci)	Activity (Ci)	Activity (Ci)	Activity (Ci)	Activity (Ci)
H-3	2.03E-04	2.36E-04	2.95E-04	1.24E-07	9.32E-07
Be-10	1.29E-04	1.50E-04	1.87E-04	7.89E-08	5.92E-07
C-14	2.39E-02	2.78E-02	3.47E-02	1.46E-05	1.10E-04
Cl-36	2.33E-04	2.70E-04	3.37E-04	1.42E-07	1.07E-06
Mn-54	2.72E-08	3.16E-08	3.95E-08	1.67E-11	1.25E-10
Ni-59	2.89E-05	3.35E-05	4.20E-05	1.77E-08	1.33E-07
Co-60	1.87E-01	2.17E-01	2.71E-01	1.14E-04	8.56E-04
Ni-63	3.54E-03	4.10E-03	5.13E-03	2.16E-06	1.62E-05
Zn-65	2.18E-09	2.53E-09	3.16E-09	1.33E-12	9.99E-12
Sr-90	1.26E-03	1.46E-03	1.83E-03	7.70E-07	5.77E-06
Nb-94	1.35E-04	1.56E-04	1.95E-04	8.23E-08	6.17E-07
Tc-99	9.30E-08	1.08E-07	1.35E-07	5.69E-11	4.27E-10
Ru-106	2.48E-07	2.87E-07	3.59E-07	1.51E-10	1.14E-09
Ag-108m	1.77E-03	2.05E-03	2.57E-03	1.08E-06	8.11E-06
Ag-110m	1.73E-08	2.00E-08	2.51E-08	1.06E-11	7.92E-11
Sb-125	1.04E-04	1.20E-04	1.50E-04	6.34E-08	4.76E-07
I-129	1.73E-09	2.01E-09	2.51E-09	1.06E-12	7.94E-12
Cs-134	1.13E-02	1.31E-02	1.64E-02	6.93E-06	5.20E-05
Cs-137	2.67E-03	3.09E-03	3.87E-03	1.63E-06	1.22E-05
Ce-144	1.21E-08	1.41E-08	1.76E-08	7.41E-12	5.55E-11
Eu-152	2.02E-02	2.35E-02	2.94E-02	1.24E-05	9.28E-05
Eu-154	5.99E-02	6.95E-02	8.69E-02	3.66E-05	2.75E-04
Pb-210	2.84E-13	3.29E-13	4.11E-13	1.73E-16	1.30E-15
Ra-226	3.89E-13	4.51E-13	5.64E-13	2.38E-16	1.78E-15
Ac-227	6.65E-09	7.71E-09	9.65E-09	4.07E-12	3.05E-11
Th-228	2.59E-04	3.00E-04	3.76E-04	1.58E-07	1.19E-06
Th-229	5.04E-09	5.84E-09	7.31E-09	3.08E-12	2.31E-11
Th-230	3.21E-11	3.72E-11	4.65E-11	1.96E-14	1.47E-13
Pa-231	4.67E-09	5.42E-09	6.78E-09	2.86E-12	2.14E-11
Th-232	1.19E-09	1.38E-09	1.73E-09	7.29E-13	5.47E-12
U-232	2.15E-07	2.50E-07	3.12E-07	1.32E-10	9.86E-10
U-233	1.21E-06	1.40E-06	1.75E-06	7.39E-10	5.54E-09
U-234	6.08E-08	7.05E-08	8.82E-08	3.72E-11	2.79E-10
U-235	1.11E-09	1.29E-09	1.61E-09	6.78E-13	5.08E-12
U-236	3.77E-09	4.37E-09	5.47E-09	2.31E-12	1.73E-11
Np-237	3.98E-09	4.62E-09	5.78E-09	2.43E-12	1.83E-11
U-238	3.94E-08	4.57E-08	5.71E-08	2.41E-11	1.81E-10
Pu-238	3.75E-05	4.36E-05	5.45E-05	2.30E-08	1.72E-07
Pu-239	1.36E-04	1.58E-04	1.97E-04	8.32E-08	6.24E-07
Pu-240	7.58E-05	8.79E-05	1.10E-04	4.64E-08	3.48E-07
Pu-241	4.12E-03	4.78E-03	5.98E-03	2.52E-06	1.89E-05
Pu-242	3.39E-08	3.94E-08	4.92E-08	2.08E-11	1.56E-10
Pu-244	1.13E-16	1.31E-16	1.64E-16	6.89E-20	5.17E-19
Am-241	2.92E-04	3.39E-04	4.24E-04	1.79E-07	1.34E-06
Am-243	4.93E-08	5.72E-08	7.16E-08	3.02E-11	2.26E-10
Cm-243	6.78E-08	7.87E-08	9.84E-08	4.15E-11	3.11E-10
Cm-244	8.11E-07	9.41E-07	1.18E-06	4.96E-10	3.72E-09
Cm-245	2.85E-11	3.31E-11	4.14E-11	1.75E-14	1.31E-13
Cm-246	2.02E-12	2.34E-12	2.93E-12	1.23E-15	9.26E-15
Cm-247	1.10E-18	1.28E-18	1.60E-18	6.73E-22	5.04E-21
Cm-248	5.51E-19	6.39E-19	8.00E-19	3.37E-22	2.53E-21
Total	3.17E-01	3.68E-01	4.60E-01	1.94E-04	1.45E-03

Table 8. EBR-II Graphite Component Activation Activity (Continued)

Component	Outer Shield 4th Row Graphite	Outer Shield 5th Row Graphite	Upper Neutron Shield 1st Row Graphite	Upper Neutron Shield 2nd Row Graphite	Upper Neutron Shield 3rd Row Graphite
Volume (cm^3)	2.96E+06	3.30E+06	4.58E+04	4.58E+04	4.58E+04
Mass (g)	4.74E+06	5.28E+06	7.33E+04	7.33E+04	7.33E+04
Ni-63 Specific Activity (Ci/g)	3.21E-14	3.41E-14	2.43E-11	9.74E-12	2.43E-12
Radionuclide	Activity (Ci)	Activity (Ci)	Activity (Ci)	Activity (Ci)	Activity (Ci)
H-3	8.74E-09	1.03E-08	1.02E-07	4.10E-08	1.02E-08
Be-10	5.55E-09	6.57E-09	6.51E-08	2.60E-08	6.51E-09
C-14	1.03E-06	1.22E-06	1.21E-05	4.83E-06	1.21E-06
Cl-36	1.00E-08	1.18E-08	1.17E-07	4.69E-08	1.17E-08
Mn-54	1.17E-12	1.39E-12	1.37E-11	5.49E-12	1.37E-12
Ni-59	1.24E-09	1.47E-09	1.46E-08	5.83E-09	1.46E-09
Co-60	8.03E-06	9.50E-06	9.42E-05	3.77E-05	9.42E-06
Ni-63	1.52E-07	1.80E-07	1.78E-06	7.14E-07	1.78E-07
Zn-65	9.38E-14	1.11E-13	1.10E-12	4.40E-13	1.10E-13
Sr-90	5.41E-08	6.40E-08	6.35E-07	2.54E-07	6.35E-08
Nb-94	5.79E-09	6.85E-09	6.79E-08	2.72E-08	6.79E-09
Tc-99	4.00E-12	4.73E-12	4.69E-11	1.88E-11	4.69E-12
Ru-106	1.07E-11	1.26E-11	1.25E-10	5.00E-11	1.25E-11
Ag-108m	7.61E-08	9.00E-08	8.92E-07	3.57E-07	8.92E-08
Ag-110m	7.43E-13	8.78E-13	8.71E-12	3.48E-12	8.71E-13
Sb-125	4.46E-09	5.28E-09	5.23E-08	2.09E-08	5.23E-09
I-129	7.45E-14	8.81E-14	8.74E-13	3.50E-13	8.74E-14
Cs-134	4.87E-07	5.77E-07	5.72E-06	2.29E-06	5.72E-07
Cs-137	1.15E-07	1.36E-07	1.34E-06	5.38E-07	1.34E-07
Ce-144	5.21E-13	6.16E-13	6.11E-12	2.44E-12	6.11E-13
Eu-152	8.71E-07	1.03E-06	1.02E-05	4.08E-06	1.02E-06
Eu-154	2.58E-06	3.05E-06	3.02E-05	1.21E-05	3.02E-06
Pb-210	1.22E-17	1.44E-17	1.43E-16	5.72E-17	1.43E-17
Ra-226	1.67E-17	1.98E-17	1.96E-16	7.84E-17	1.96E-17
Ac-227	2.86E-13	3.38E-13	3.35E-12	1.34E-12	3.35E-13
Th-228	1.11E-08	1.32E-08	1.31E-07	5.22E-08	1.31E-08
Th-229	2.17E-13	2.56E-13	2.54E-12	1.02E-12	2.54E-13
Th-230	1.38E-15	1.63E-15	1.62E-14	6.47E-15	1.62E-15
Pa-231	2.01E-13	2.38E-13	2.36E-12	9.43E-13	2.36E-13
Th-232	5.13E-14	6.06E-14	6.01E-13	2.41E-13	6.01E-14
U-232	9.25E-12	1.09E-11	1.09E-10	4.34E-11	1.09E-11
U-233	5.20E-11	6.15E-11	6.10E-10	2.44E-10	6.10E-11
U-234	2.61E-12	3.09E-12	3.06E-11	1.23E-11	3.06E-12
U-235	4.77E-14	5.64E-14	5.59E-13	2.24E-13	5.59E-14
U-236	1.62E-13	1.92E-13	1.90E-12	7.61E-13	1.90E-13
Np-237	1.71E-13	2.03E-13	2.01E-12	8.03E-13	2.01E-13
U-238	1.69E-12	2.00E-12	1.99E-11	7.95E-12	1.99E-12
Pu-238	1.61E-09	1.91E-09	1.89E-08	7.57E-09	1.89E-09
Pu-239	5.85E-09	6.92E-09	6.86E-08	2.74E-08	6.86E-09
Pu-240	3.26E-09	3.86E-09	3.82E-08	1.53E-08	3.82E-09
Pu-241	1.77E-07	2.10E-07	2.08E-06	8.31E-07	2.08E-07
Pu-242	1.46E-12	1.73E-12	1.71E-11	6.85E-12	1.71E-12
Pu-244	4.85E-21	5.73E-21	5.68E-20	2.27E-20	5.69E-21
Am-241	1.26E-08	1.49E-08	1.47E-07	5.89E-08	1.47E-08
Am-243	2.12E-12	2.51E-12	2.49E-11	9.95E-12	2.49E-12
Cm-243	2.92E-12	3.45E-12	3.42E-11	1.37E-11	3.42E-12
Cm-244	3.49E-11	4.13E-11	4.09E-10	1.64E-10	4.09E-11
Cm-245	1.23E-15	1.45E-15	1.44E-14	5.76E-15	1.44E-15
Cm-246	8.69E-17	1.03E-16	1.02E-15	4.07E-16	1.02E-16
Cm-247	4.73E-23	5.60E-23	5.55E-22	2.22E-22	5.55E-23
Cm-248	2.37E-23	2.80E-23	2.78E-22	1.11E-22	2.78E-23
Total	1.36E-05	1.61E-05	1.60E-04	6.40E-05	1.60E-05

Table 8. EBR-II Graphite Component Activation Activity (Continued)

Component	Upper Neutron Shield 4th Row Graphite	Upper Neutron Shield 5th Row Graphite	Upper Neutron Shield 6th Row Graphite
Volume (cm^3)	4.58E+04	4.58E+04	4.58E+04
Mass (g)	7.33E+04	7.33E+04	7.33E+04
Ni-63 Specific Activity (Ci/g)	7.79E-13	1.46E-13	3.89E-14
Radionuclide	Activity (Ci)	Activity (Ci)	Activity (Ci)
H-3	3.28E-09	6.15E-10	1.64E-10
Be-10	2.08E-09	3.91E-10	1.04E-10
C-14	3.86E-07	7.25E-08	1.93E-08
Cl-36	3.75E-09	7.04E-10	1.88E-10
Mn-54	4.40E-13	8.24E-14	2.20E-14
Ni-59	4.67E-10	8.75E-11	2.33E-11
Co-60	3.01E-06	5.65E-07	1.51E-07
Ni-63	5.71E-08	1.07E-08	2.85E-09
Zn-65	3.52E-14	6.60E-15	1.76E-15
Sr-90	2.03E-08	3.81E-09	1.02E-09
Nb-94	2.17E-09	4.07E-10	1.09E-10
Tc-99	1.50E-12	2.82E-13	7.51E-14
Ru-106	4.00E-12	7.50E-13	2.00E-13
Ag-108m	2.86E-08	5.35E-09	1.43E-09
Ag-110m	2.79E-13	5.23E-14	1.39E-14
Sb-125	1.67E-09	3.14E-10	8.37E-11
I-129	2.80E-14	5.24E-15	1.40E-15
Cs-134	1.83E-07	3.43E-08	9.14E-09
Cs-137	4.30E-08	8.07E-09	2.15E-09
Ce-144	1.96E-13	3.67E-14	9.78E-15
Eu-152	3.27E-07	6.13E-08	1.63E-08
Eu-154	9.66E-07	1.81E-07	4.83E-08
Pb-210	4.58E-18	8.58E-19	2.29E-19
Ra-226	6.28E-18	1.18E-18	3.14E-19
Ac-227	1.07E-13	2.01E-14	5.36E-15
Th-228	4.18E-09	7.84E-10	2.09E-10
Th-229	8.13E-14	1.52E-14	4.07E-15
Th-230	5.17E-16	9.70E-17	2.59E-17
Pa-231	7.54E-14	1.41E-14	3.77E-15
Th-232	1.92E-14	3.61E-15	9.62E-16
U-232	3.47E-12	6.51E-13	1.74E-13
U-233	1.95E-11	3.66E-12	9.76E-13
U-234	9.81E-13	1.84E-13	4.90E-14
U-235	1.79E-14	3.35E-15	8.94E-16
U-236	6.09E-14	1.14E-14	3.04E-15
Np-237	6.42E-14	1.20E-14	3.21E-15
U-238	6.36E-13	1.19E-13	3.18E-14
Pu-238	6.06E-10	1.14E-10	3.03E-11
Pu-239	2.20E-09	4.12E-10	1.10E-10
Pu-240	1.22E-09	2.29E-10	6.12E-11
Pu-241	6.65E-08	1.25E-08	3.33E-09
Pu-242	5.48E-13	1.03E-13	2.74E-14
Pu-244	1.82E-21	3.41E-22	9.10E-23
Am-241	4.71E-09	8.84E-10	2.36E-10
Am-243	7.96E-13	1.49E-13	3.98E-14
Cm-243	1.09E-12	2.05E-13	5.47E-14
Cm-244	1.31E-11	2.45E-12	6.55E-13
Cm-245	4.61E-16	8.64E-17	2.30E-17
Cm-246	3.26E-17	6.11E-18	1.63E-18
Cm-247	1.78E-23	3.33E-24	8.88E-25
Cm-248	8.89E-24	1.67E-24	4.45E-25
Total	5.12E-06	9.60E-07	2.56E-07

Stellite Activity

The reactor vessel cover contains 12 Stellite-6 guide tubes that accommodated the 12 control rod drive shafts. Stellite 6 is a cobalt-based alloy chosen for its high abrasion, corrosion, and elevated temperature wear resistance.

While cobalt accounts for only ~0.17 % wt of the 304 SS alloy, as shown in Table 6, Co-60 accounts for ~43% of the decayed source term for the reactor stainless steel components. In Stellite-6, cobalt accounts for 59% of the alloy weight (Reference 16). Other materials forming the alloy are similar to those used in 304 SS including the following: carbon (1.2% wt), chromium (30% wt), iron (1% wt), nickel (1% wt), silicon (1.2% wt), tungsten (5% wt) and other elements (1.5% wt).

Since cobalt accounts for such a large percentage of the decayed source term in 304 SS and because there such a large percentage of cobalt in Stellite-6, Co-60, in addition to Ni-63, are the only radionuclides of significance in the Satellite-6 component source term. The methodology used to calculate the source term associated with the Stellite components was similar to that used for the activated 304 SS components with the following exceptions:

- The quantity of Ni-62 per gram of Stellite is 3.79E-04 g/g, calculated using the 1% wt nickel in Stellite and 3.79% Ni-62 in nickel, or 3.68E+18 atoms of Ni-62 per gram of Stellite.
- The results of the Ni-63 calculations for the satellite components are presented in Attachment C. The decayed Ni-63 specific activity in Stellite is 1.32E-08 Ci/g.
- Once the Ni-63 specific activity was determined, the Co-60 specific activity was calculated by multiplying the Ni-63 specific activity by the Co-60 normalized to Ni-63 value from Table 5 (0.943) and by the ratio of the initial concentration of Co-59 in Stellite and in 304 SS (0.59/.0017 = 347).
- The decayed Co-60 specific activity in Stellite is then 4.31E-06 Ci/g
- The source term for the Stellite components was then calculated by multiplying the Ni-63 and Co-60 specific activity values presented above by the components mass. The mass values were calculated from the data provided in Reference 1 and the engineering drawings of the tubes.
- The results of these calculations are presented in Table 9.

Table 9. EBR-II Stellite Component Activation Activity

Component	Stellite Guide Tubes
Volume (cm3)	1.72E+04
Mass (g)	1.45E+05
Ni-63 Specific Activity (Ci/g)	1.32E-08
Radionuclide	Activity (Ci)
Co-60	6.26E-01
Ni-63	1.91E-03
Total	6.28E-01

5.3 TEST FACILITY EXTENSION TUBES ACTIVATION SOURCE TERM

The following methodology was used to calculate the source term values associated with the test facility extension tubes stored within the pentagon area of MFC-767:

- The actual irradiation history of these tubes is unknown. Each of these tubes was used for one experiment then cut from the experiment and stored in the shielded pentagon area. The dose rate associated with these tubes is also unknown. The irradiated ends of these tubes are currently located in an area where surveys are not possible.
- Based on the use of these tubes, it is conservatively assumed that the activation activity associated with these tubes is the same as the control rod drive rod presented in Table 2.
- Since there are 8 of these tubes, the Table 2 values were multiplied by 8.
- The source term results associated with these tubes is presented in Table 10.

Table 10. Test Facility Extension Tube Source Term

Radionuclide	Test Facility Extension Tube (8) Activity (Ci)
C-14	7.55E-02
Cl-36	3.88E-05
Co-60	5.98E+02
Ni-59	3.80E-01
Ni-63	2.52E+01
Nb-94	1.22E-02
Tc-99	3.17E-02
Total	6.24E+02

5.4 WIDE RANGE & DELAYED NEUTRON DETECTOR SOURCE TERM

The source term associated with the wide range and delayed neutron detectors was determined in preparation to down grade the facility from a reactor facility to a less than HAZCAT-III facility. The facility source term associated with this down grade is presented in F0000-0170-AK (Reference 8), *Reclassify EBR-II reactor from a Category 1 Nuclear Facility to a Non-Nuclear(radiological) Low Hazard Facility.* Included in this document was an Intra-Laboratory Memo from E. Hylsky to F. L. DiLorenzo dated February 24, 1997 that states there was a total of 13.71 grams (2.96E-05 Ci) of U-235 associated with the remaining wide range and delayed neutron detectors.

5.4 PRIMARY SODIUM ACTIVITY

From Table 1, there is an estimated ~300 gal. of primary sodium remaining in the primary tank and ~100 gal. in primary ancillary equipment (sodium purification system piping, sample system piping, cover gas cleanup system, etc). INL/EXT-08-14173 (Reference 17), *EBR-II Primary Tank Wash-Water Alternatives Evaluation,* present the results of a primary sodium sample that was performed in 1994. This sample was analyzed for 25 different radionuclides that were expected to be present in sodium coolant. The results of this sample and the results decayed from 1994 to 2009 are presented in Table 11.

Table 11. Primary Sodium Radionuclides

Radionuclide	1994 Activity (Ci/g)	$T_{1/2}$ (years)	2009 Activity (Ci/g)
Ag-110m	3.55E-15	0.684	8.89E-22
Cs-134	2.65E-11	2.062	1.71E-13
Cs-137	1.71E-08	30.17	1.21E-08
H-3	1.10E-07	12.28	4.72E-08
Mn-54	8.28E-15	0.856	4.40E-20
Na-22	2.82E-09	2.602	5.19E-11
Po-210	2.35E-21	0.379	-
Pu-239	3.15E-13	24131	3.15E-13
Sb-125	2.66E-10	2.77	6.23E-12
Sn-113	2.17E-20	0.315	-
Sr-89	2.10E-39	0.138	-
Sr-90	9.42E-11	28.6	6.55E-11

The source term associated with the residual sodium in the primary tank was determined by multiplying the residual sodium volume shown in Table 1 (300 gal.) by the density of sodium (0.927 g/cm^3) and then multiplying this result by the decayed values presented in Table 11. The results of these calculations are presented in Table 12.

The same methodology was used for the sodium remaining in the primary ancillary equipment with the result of the calculations also shown in Table 12.

Table 12. Primary Sodium Activity

Radionuclide	Primary Tank Sodium Activity (Ci)	Ancillary Equipment Sodium Activity (Ci)
Ag-110m	9.35E-16	3.12E-16
Cs-134	1.80E-07	6.01E-08
Cs-137	1.28E-02	4.25E-03
H-3	4.97E-02	1.66E-02
Mn-54	4.63E-14	1.54E-14
Na-22	5.46E-05	1.82E-05
Pu-239	3.31E-07	1.10E-07
Sb-125	6.56E-06	2.19E-06
Sr-90	6.89E-05	2.30E-05

5.4 NaK ACTIVITY

From Table 1, there is an estimated ~50 gal. of NaK remaining in the shutdown cooler plugs and ~0.3 gal. of NaK remaining in pressure transmitters. These NaK containing systems were not sampled so the following methodology was used to estimate the associated source terms:

- Since the NaK was separated from the primary sodium, the NaK would not be contaminated with the activated impurities in the bulk sodium (Ag-110m, Po-210, and Sb-125), with the radionuclides associated with fission except H-3 (Cs-134, Cs-137, and Sr-90), with the radionuclides associated with activation of corrosion products (Mn-54) nor with the radionuclides associated with fuel (Pu-239).
- It was thus assumed that the radionuclides contaminating the NaK are Na-22 and H-3.
- It was assumed that the specific activity of these two remaining radionuclides is the same in the NaK as the primary sodium.
- The source term associated with the residual NaK was determined by multiplying the residual NaK volume shown in Table 1 (50.3 gal.) by the density of NaK (0.87 g/cm^3) and then multiplying this result by the decayed H-3 and Na-22 values presented in Table 11. The results of these calculations are presented in Table 13.

Table 13. NaK Activity

Radionuclide	NaK Activity (Ci)
H-3	7.81E-03
Na-22	8.59E-06

5.5 IHX (SECONDARY) ACTIVITY

The ternary fission product H-3 readily diffuses through fuel cladding (and other system boundaries) where most of it was collected in the purification system cold traps. H-3 was present in all systems from the primary system to the condenser of the steam plant (Reference 18). During plant operation, the activity of the tritium in the secondary system was ~1/10 of that in the primary (Reference 8). The secondary sodium system was operated at a higher pressure than the primary sodium passing thru the IHX, any leakage would be from the secondary to the primary. In determining the source term associated with the secondary sodium, it is assumed that H-3 is the only radionuclide making a significant contribution to the IHX sodium activity. The H-3 activity in the secondary sodium in the IHX was determined by multiplying the sodium volume presented in Table 1 (40 gal) by the density of sodium then multiplying this result by 1/10 the delayed H-3 value shown in Table 11. The results of this calculation are presented in Table 14.

Table 14. IHX Secondary Sodium Activity

Radionuclide	IHX Sodium Activity (Ci)
H-3	6.14E-04

5.6 PRIMARY SYSTEM SURFACE CONTAMINATION ACTIVITY

Following the carbonation process of primary system residual sodium in 2005, the primary system was, and still is, maintained under a blanket of dry carbon dioxide. Surfaces inside of the primary tank are currently inaccessible for survey. Very few of the components forming the primary system that were exposed to primary sodium have been removed for maintenance and surveyed for surface contamination. However, over the operating history of EBR-II, both primary pumps have been removed from the primary tank, cleaned, surveyed, rebuilt, and returned to service. The following information concerning dose rates and radionuclide data associated with this pump maintenance was obtained from CONF-860311-1 (Reference 18), *The Impact of Radionuclides on Maintenance of Experimental Breeder Reactor II*:

- Pump No. 1 was rebuilt in 1971 and showed a peak gamma dose rate of 150 mR/hr at ~ 1 ft with no unusual beta activity.
- Pump No. 2 was rebuilt in 1982 and showed a peak gamma dose rate of 500 mR/hr and a combined beta/gamma dose rate of 10 R/hr at ~ 1 ft.
- The predominate radionuclide contributing to the pump No. 2 gamma surface dose rate was Mn-54. The radioactivity due to other gamma emitting radionuclides (primarily Cr-51, Co-58, Co-60 and Ta-182) though sometimes detectable, was of little consequence compared to that from Mn-54. While the activity of Mn-54 in the bulk primary sodium is relatively low, manganese apparently had a very low but finite solubility in sodium. It transported throughout the primary system and deposited on piping and component surfaces.
- The predominate radionuclide contributing to the pump No. 2 beta surface dose rate was Sr-90. Nearly all of the run-beyond-cladding-breach experiments were conducted after 1975 (after pump No. 1 was rebuilt) and these experiments contributed to the high Sr-90 activity on pump No. 2. The solubility of strontium in sodium is very low and strontium is not expected to transport readily from breached

fuel. The precursors of Sr-90 in the fission product decay chain are Rb-90, Kr-90, and Br-90 all with short half lives and all are readily transported by sodium. It was thus theorized that these soluble fission products were transported from the exposed fuel to the bulk sodium, then decayed to Sr-90 which deposited on component surfaces.

The elevated dose rates on pump No. 2 were at the center (low pressure area) of the pump impeller and the dose rates on other pump components were significantly lower (Reference 9). Sr-90 was also found to collect on surfaces that were at a lower temperature than the bulk sodium (Reference 9).

Lacking any other survey data, the source term associated with primary system surface contamination was determined using the following methodology and assumptions:

- Based on the discussion above, Sr-90 and Mn-54 are the only radionuclides assumed to make a significant contribution to the primary surface contamination source term.
- The surfaces that were at a significantly lower pressure or temperature than the bulk sodium are the centers of the No. 1 and No. 2 primary pump impellers, the heat transfer surface area of the IHX, and the heat transfer surface area of the shut down cooler plugs. These are the only surfaces that are assumed to contain contamination at high enough levels to make a significant contribution to the surface source term.
- The diameter of discharge line from the primary pumps is 12 in. therefore the assumed contaminated surface area of the center of each pump impeller is assumed to be equivalent to a 6 in diameter disk or 182.4 cm^2.
- The heat transfer surface area of the IHX is 4800 sq. ft (4.46E06 cm^2) and the heat transfer surface area of each shutdown cooler plug is 2.16E04 cm^2.
- The gamma surface activity level (Ci/cm^2) of Mn-54 was determined using MicroShield (Reference 19) with the following input data:
    - The impeller contaminated surface area was modeled as a disk of 6 in. diameter.
    - The dose rate on the pump No. 1 impeller was 150 mR/hr in 1971. Assuming that the pump No. 2 impeller had a similar dose rate in 1971, then the dose rate due to the continued deposition of Mn-54 increased ~ 31.8 mR/hr/year to give the 500 mR/hr dose rate in 1982. Assuming this rate of dose rate increase continued until reactor shutdown in 1994, the impeller dose rate in 1994 was 882 mR/hr. This is the dose rate used in the MicroShield model.
    - The MicroShield output is presented in Attachment D
- In 1971 the beta dose rate on pump No. 1 was negligible. In 1975 run-beyond-cladding-breach experiments were started and the beta dose rates increased to ~10 Rad/hr over the next seven years. This gives an average increase of 1.43 Rad/hr/year. Assuming this rate of dose rate increase continued until reactor shutdown in 1994, the impeller beta dose rate in 1994 was ~27 Rad/hr.
- The beta surface activity levels (Ci/cm^2) of Sr-90 and of its short lived, secular equilibrium daughter, Y-90, where determined using the following equation from Reference 20:

$$D_b(mR/hr) = 1.3\times10^3 \times C_a \times \overline{E} \times e^{-\mu_{\beta,a}d} \times e^{-\mu_{\beta,t}\times 0.007} \times \mu_{\beta,t}$$ Equation 6

Where:

C_a = Surface activity level (uCi/cm^2). Since Sr-90 decays 100% of the time to Y-90 and since these radionuclides are in secular equilibrium, the C_a values for Sr-90 and Y-90 are equal

$\overline{E}$ = Average beta energy (MeV)

d = "Distance"(g/cm^2) determined by multiplying the perpendicular distance above surface to the detector by the density of air (1.2929E-03 g/cm^3)

$\mu_{\beta,a}$ = Beta-ray absorption coefficient for air

$\mu_{\beta,t}$ = Beta-ray absorption coefficient for tissue which is equivalent to that of the beta window on the survey instrument

The beta-ray absorption coefficients for air and tissue are determined using the following equations:

$$\mu_{\beta,a}(air) = 16(E_m - 0.036)^{-1.4}(cm^2/g)$$ Equation 7

And

$$\mu_{\beta,a}(tissue) = 18.6(E_m - 0.036)^{-1.37}(cm^2/g)$$ Equation 8

Where:

E_m = Maximum beta energy

By trial and error, the contamination levels were adjusted until a 27 R/hr dose rate was obtained. The results of the calculations and input values used are presented in Table 15.

Table 15. Beta Surface Activity Levels in 1994

Radionuclide	C_a uCi/cm^2	E_m (MeV)	$\overline{E}$ (MeV)	$u_{\beta,t}$	$u_{\beta,a}$	β Dose Rate (mrad/hr)
Sr-90	3.56E+00	0.546	0.1958	4.68E+01	4.11E+01	6.21E+03
Y-90	3.56E+00	2.2839	0.9348	6.13E+00	5.15E+00	2.08E+04
					Total =	2.70E+04

- Once the surface activity levels for Mn-54 and Sr-90 were determined for 1994, they were decayed to 2009.
- The surface contamination source term for each component was then calculated by multiplying the decayed surface activity level by the contaminated surface area. The results of these calculations are presented in Table 16.

Table 16. Primary System Surface Contamination Source Term

Radionuclide	1994 Surface Activity (Ci/cm^2)	2009 Surface Activity (Ci/g)	Pump Impeller Activity (Ci)	IHX Activity (Ci)	Shutdown Cooler Plug Activity (Ci)	Total (Ci)
Mn-54	6.77E-04	3.59E-09	1.31E-06	1.60E-02	1.56E-04	1.62E-02
Sr-90	3.56E-06	2.47E-06	9.02E-04	1.10E+01	1.07E-01	1.11E+01

5.7 PENTEGON AREA SURFACE CONTAMINATION ACTIVITY

Loose contamination levels inside of the pentagon area are low, <1000 dpm/100 cm^2 βγ and <20 dpm/100 cm^2 α (Reference 21). Fixed contamination in this area results in an average general area dose rate of 2.8 mrem/hr. Using this dose rate data, the source term associated with this fixed contamination was determined using the following methodology:

- Since the elevated dose rates were associated with the floor of the pentagon area, the floor was modeled in MicroShield as a 6 ft by 6 ft flat surface.
- Since the pentagon area was used for cutting activated 304 SS components, the same radionuclides in the same relative concentrations (Ni-63 scaling factors) for 304 SS are assumed to exist in the fixed contamination.
- The activity levels were adjusted, while maintaining the same relative concentrations, until a 2.8 mrem/hr general area (30 cm) dose rate was obtained. The model output is the source term for the surface contamination.
- The source term for the pentagon area is presented in Table 17 and the MicroShield model is presented in Attachment E.

Table 17. Pentagon Area Source Term

Radionuclide	304 SS Ni-63 Normalized Values (Ci/Ci Ni-63)	Pentagon Area Floor Source Term (Ci)
H-3	2.92E-03	2.84E-06
C-14	1.35E-03	1.31E-06
Cl-36	2.88E-05	2.80E-08
Ca-41	2.47E-07	2.40E-10
Mn-53	1.42E-07	1.38E-10
Mn-54	1.28E-06	1.25E-09
Fe-55	2.46E-01	2.39E-04
Ni-59	8.83E-03	8.59E-06
Co-60	9.43E-01	9.18E-04
Ni-63	1.00E+00	9.73E-04
Zn-65	3.54E-09	3.44E-12
Se-79	2.47E-08	2.40E-11
Sr-90	5.17E-06	5.03E-09
Nb-92m	4.11E-11	4.00E-14
Zr-93	1.77E-09	1.72E-12
Mo-93	2.25E-05	2.19E-08
Nb-94	1.54E-05	1.50E-08
Tc-99	4.93E-06	4.80E-09
Ag-108m	4.41E-06	4.29E-09
I-129	2.26E-12	2.20E-15
Ba-133	5.44E-05	5.29E-08
Cs-134	3.07E-06	2.99E-09
Cs-135	1.60E-10	1.56E-13
Cs-137	6.12E-06	5.95E-09
Pm-145	3.54E-08	3.44E-11
Sm-151	1.08E-05	1.05E-08
Eu-152	7.23E-04	7.04E-07
Eu-154	7.35E-05	7.15E-08
Eu-155	1.20E-06	1.17E-09
Ho-166m	6.11E-06	5.95E-09
Pb-205	6.99E-11	6.80E-14
U-233	6.99E-08	6.80E-11
Pu-239	1.97E-06	1.92E-09
	Total =	2.14E-03

6.0 EBR-II (MFC-767) TOTAL SOURCE TERM

Table 18. EBR-II (MFC-767) Facility Source Term

Radionuclide	Core/Blanket Activated Metal Source Term (Ci)	Reactor Vessel Activated metal Source Term (Ci)	Test Facility Extension Tube Activated Metal Source Term (Ci)	Neutron Detector Source Term (Ci)	Primary Sodium Source Term (Ci)	NaK Source Term (Ci)	IHX Secondary Sodium Activity (Ci)	Primary Surface Contamination Activity (Ci)	Pentagon Area Surface Contamination Activity (Ci)	Total (Ci)
H-3		1.73E+01			6.62E-02	7.81E-03	6.14E-04		2.84E-06	1.74E+01
Be-10		4.67E-04								4.67E-04
C-14	1.87E-01	8.12E+00	7.55E-02						1.31E-06	8.38E+00
Na-22					7.28E-05	8.59E-06				8.14E-05
Cl-36	8.72E-05	1.72E-01	3.88E-05						2.80E-08	1.72E-01
Ca-41		1.46E-03							2.40E-10	1.46E-03
Mn-53		8.41E-04							1.38E-10	8.41E-04
Mn-54		7.60E-03			6.17E-14			1.62E-02	1.25E-09	2.38E-02
Fe-55		1.46E+03							2.39E-04	1.46E+03
Ni-59	8.96E-01	5.24E+01	3.80E-01						8.59E-06	5.37E+01
Co-60	1.23E+03	5.60E+03	5.98E+02						9.18E-04	7.43E+03
Ni-63	5.89E+01	5.93E+03	2.52E+01						9.73E-04	6.02E+03
Zn-65		2.10E-05							3.44E-12	2.10E-05
Se-79		1.46E-04							2.40E-11	1.46E-04
Sr-90		3.53E-02			9.19E-05			1.11E+01	5.03E-09	1.12E+01
Nb-92m		2.44E-07							4.00E-14	2.44E-07
Zr-93		1.05E-05							1.72E-12	1.05E-05
Mo-93		1.34E-01							2.19E-08	1.34E-01
Nb-94	2.85E-02	9.19E-02	1.22E-02						1.50E-08	1.33E-01
Tc-99	7.21E-02	2.93E-02	3.17E-02						4.80E-09	1.33E-01
Ru-106		8.96E-07								8.96E-07
Ag-108m		3.26E-02							4.29E-09	3.26E-02
Ag-110m		6.25E-08			1.25E-15					6.25E-08
Sn-121m		1.06E-03								1.06E-03
Sb-125		3.75E-04			8.75E-06					3.84E-04
I-129		1.97E-08							2.20E-15	1.97E-08
Ba-133		3.23E-01							5.29E-08	3.23E-01
Cs-134		5.92E-02			2.40E-07				2.99E-09	5.92E-02
Cs-135		9.51E-07							1.56E-13	9.51E-07
Cs-137		4.59E-02			1.70E-02				5.95E-09	6.29E-02
Ce-144		4.38E-08								4.38E-08
Pm-145		2.10E-04							3.44E-11	2.10E-04
Sm-146		5.24E-11								5.24E-11
Sm-151		6.41E-02							1.05E-08	6.41E-02
Eu-152		4.36E+00							7.04E-07	4.36E+00
Eu-154		6.53E-01							7.15E-08	6.53E-01
Eu-155		7.14E-03							1.17E-09	7.14E-03
Tb-158		6.45E-04								6.45E-04

Radionuclide	Core/Blanket Activated Metal Source Term (Ci)	Reactor Vessel Activated metal Source Term (Ci)	Test Facility Extension Tube Activated Metal Source Term (Ci)	Neutron Detector Source Term (Ci)	Primary Sodium Source Term (Ci)	NaK Source Term (Ci)	IHX Secondary Sodium Activity (Ci)	Primary Surface Contamination Activity (Ci)	Pentagon Area Surface Contamination Activity (Ci)	Total (Ci)
Ho-166m		3.63E-02							5.95E-09	3.63E-02
Hf-178m		1.05E-01								1.05E-01
Pb-205		4.15E-07							6.80E-14	4.15E-07
Pb-210		1.03E-12			4.02E-27					1.03E-12
Ra-226		1.41E-12								1.41E-12
Ac-227		2.40E-08								2.40E-08
Th-228		9.37E-04								9.37E-04
Th-229		1.82E-08								1.82E-08
Th-230		1.16E-10								1.16E-10
Pa-231		1.69E-08								1.69E-08
Th-232		4.31E-09								4.31E-09
U-232		7.78E-07								7.78E-07
U-233		4.19E-04							6.80E-11	4.19E-04
U-234		2.20E-07								2.20E-07
U-235		4.01E-09		2.96E-05						2.96E-05
U-236		1.36E-08								1.36E-08
Np-237		1.44E-08								1.44E-08
U-238		1.42E-07								1.42E-07
Pu-238		1.36E-04								1.36E-04
Pu-239		1.22E-02			4.42E-07				1.92E-09	1.22E-02
Pu-240		2.74E-04								2.74E-04
Pu-241		1.49E-02								1.49E-02
Pu-242		1.23E-07								1.23E-07
Pu-244		4.08E-16								4.08E-16
Am-241		1.06E-03								1.06E-03
Am-243		1.78E-07								1.78E-07
Cm-243		2.45E-07								2.45E-07
Cm-244		2.93E-06								2.93E-06
Cm-245		1.03E-10								1.03E-10
Cm-246		7.30E-12								7.30E-12
Cm-247		3.98E-18								3.98E-18
Cm-248		1.99E-18								1.99E-18
Total	1.29E+03	1.31E+04	6.24E+02	2.96E-05	8.34E-02	7.82E-03	6.14E-04	1.12E+01	2.14E-03	1.50E+04

7.0 EBR-II (MFC-767) SOURCE TERM VS. GRADE LEVEL

To support the risk assessment of the facility, source terms were determined for the following locations:

- Above grade level
- Below grade level
- Grade to 10 ft below grade level

The locations of the facility areas relative to grade are shown in Figure 21.

Figure 21. EBR-II Facility vs. Grade

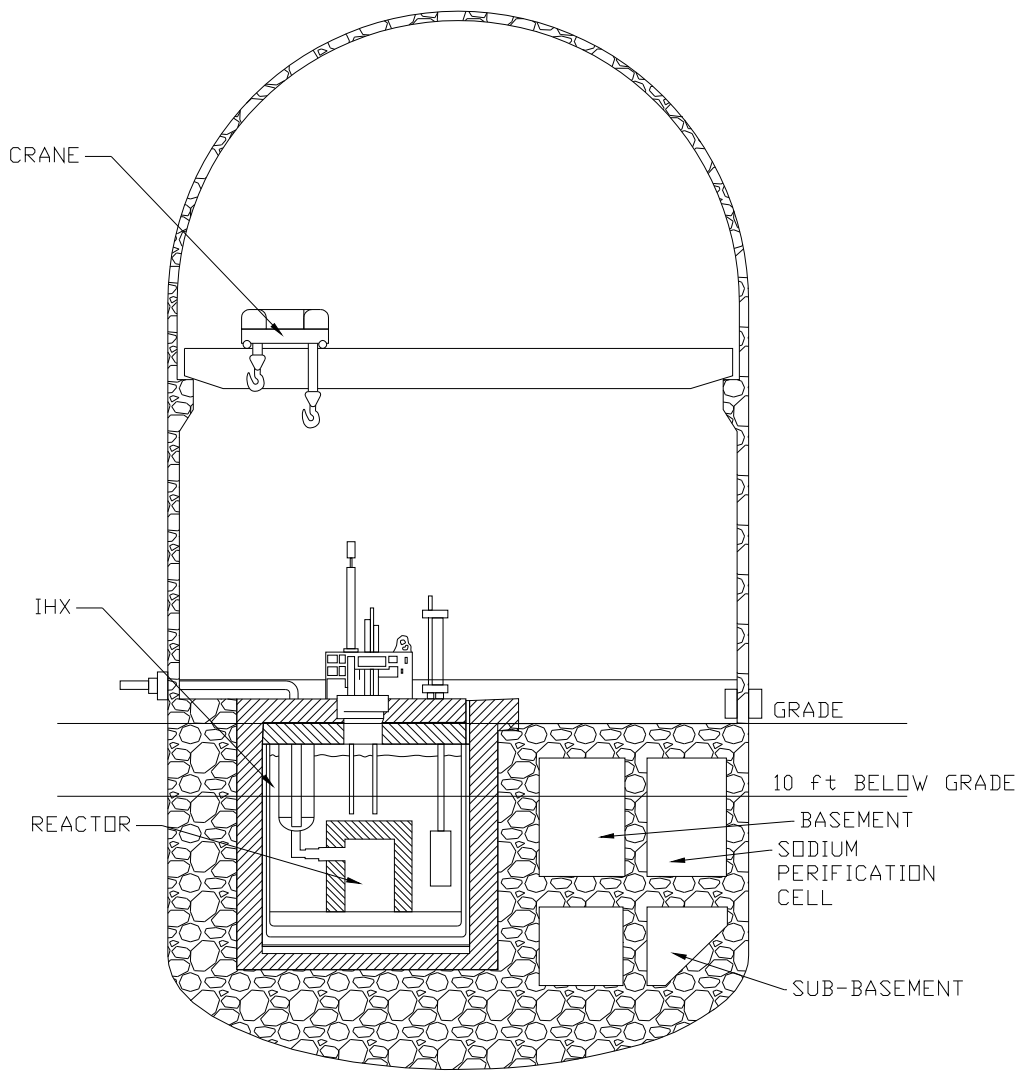

7.1 ABOVE GRADE SOURCE TERM

The only two significant contributors to the above grade source term of the facility are the CTP condenser in the CGCS and the pentagon surfaces. The source term associated with the CTP condenser is due to its residual primary sodium and the source term for this component is included in the values shown in Table 12 (Ancillary Equipment sodium). Per INL/EXT-06-01189 (Reference 22), *Technical Information on the Carbonation of the EBR-II Reactor,* based on the hydrogen production and moister content of the exhausted carbonation gas, there is approximately 31 kg of primary sodium remaining in the condenser. The source term of this sodium is determined by multiplying this mass by the specific activity values from Table 11. The source term for the pentagon area is presented in Table 18 and the total above grade source term is presented in Table 19.

7.2 BELOW GRADE SOURCE TERM

The below grade source term was determined by subtracting the above grade source term from the total facility source term. The results of this calculation are presented in Table 20.

7.3 0 ft to 10 ft BELOW GRADE SOURCE TERM

Sources of activity contributing to the source term in the region from grade level to 10 ft below grade include the following:

- ~ ½ the contaminated surface area of the IHX
- The two primary pump impellers
- ~1/4 the contaminated surface area of the shutdown cooler plugs
- Condensed sodium vapor on the primary tank cover. Since the amount of this condensed vapor was never quantified, it is assumed to be 1% of the total residual primary sodium.
- The majority of the sodium purification and sampling systems are positioned at a depth greater than 10 ft below grade. Small diameter lines lead to these systems to and from the primary tank. It is assumed that 1% of the activity associated with the ancillary equipment sodium is contained within these lines in the 0 to 10 ft below grade region.
- ~1/4 of the contaminated NaK remaining in the shutdown cooler plugs

The resulting source term in the 0 to 10 ft below grade region is presented in Table 20.

Table 20 EBR-II Facility Source Term vs Grade

Radionuclide	Total Facility Source Term (Ci)	Above Grade Source Term (Ci)	Below Grade Source Term (Ci)	0 to 10 ft Below Grade Source Term (Ci)
H-3	1.74E+01	1.47E-03	1.74E+01	2.62E-03
Be-10	4.67E-04		4.67E-04	
C-14	8.38E+00	1.31E-06	8.38E+00	
Na-22	8.14E-05	1.61E-06	7.98E-05	2.88E-06
Cl-36	1.72E-01	2.80E-08	1.72E-01	
Ca-41	1.46E-03	2.40E-10	1.46E-03	
Mn-53	8.41E-04	1.38E-10	8.41E-04	
Mn-54	2.38E-02	1.25E-09	2.38E-02	8.05E-03
Fe-55	1.46E+03	2.39E-04	1.46E+03	
Ni-59	5.37E+01	8.59E-06	5.37E+01	
Co-60	7.43E+03	9.18E-04	7.43E+03	
Ni-63	6.02E+03	9.73E-04	6.02E+03	
Zn-65	2.10E-05	3.44E-12	2.10E-05	
Se-79	1.46E-04	2.40E-11	1.46E-04	
Sr-90	1.12E+01	2.04E-06	1.12E+01	5.54E+00
Nb-92m	2.44E-07	4.00E-14	2.44E-07	
Zr-93	1.05E-05	1.72E-12	1.05E-05	
Mo-93	1.34E-01	2.19E-08	1.34E-01	
Nb-94	1.33E-01	1.50E-08	1.33E-01	
Tc-99	1.33E-01	4.80E-09	1.33E-01	
Ru-106	8.96E-07		8.96E-07	
Ag-108m	3.26E-02	4.29E-09	3.26E-02	
Ag-110m	6.25E-08	2.75E-17	6.25E-08	1.25E-17
Sn-121m	1.06E-03		1.06E-03	
Sb-125	3.84E-04	1.93E-07	3.84E-04	8.75E-08
I-129	1.97E-08	2.20E-15	1.97E-08	
Ba-133	3.23E-01	5.29E-08	3.23E-01	
Cs-134	5.92E-02	8.29E-09	5.92E-02	2.40E-09
Cs-135	9.51E-07	1.56E-13	9.51E-07	
Cs-137	6.29E-02	3.76E-04	6.26E-02	1.70E-04
Ce-144	4.38E-08		4.38E-08	
Pm-145	2.10E-04	3.44E-11	2.10E-04	
Sm-146	5.24E-11		5.24E-11	
Sm-151	6.41E-02	1.05E-08	6.41E-02	
Eu-152	4.36E+00	7.04E-07	4.36E+00	
Eu-154	6.53E-01	7.15E-08	6.53E-01	
Eu-155	7.14E-03	1.17E-09	7.14E-03	
Tb-158	6.45E-04		6.45E-04	
Ho-166m	3.63E-02	5.95E-09	3.63E-02	
Hf-178m	1.05E-01		1.05E-01	
Pb-205	4.15E-07	6.80E-14	4.15E-07	
Pb-210	1.03E-12		1.03E-12	
Ra-226	1.41E-12		1.41E-12	
Ac-227	2.40E-08		2.40E-08	

Radionuclide	Total Facility Source Term (Ci)	Above Grade Source Term (Ci)	Below Grade Source Term (Ci)	0 to 10 ft Below Grade Source Term (Ci)
Th-228	9.37E-04		9.37E-04	
Th-229	1.82E-08		1.82E-08	
Th-230	1.16E-10		1.16E-10	
Pa-231	1.69E-08		1.69E-08	
Th-232	4.31E-09		4.31E-09	
U-232	7.78E-07		7.78E-07	
U-233	4.19E-04	6.80E-11	4.19E-04	
U-234	2.20E-07		2.20E-07	
U-235	2.96E-05		2.96E-05	
U-236	1.36E-08		1.36E-08	
Np-237	1.44E-08		1.44E-08	
U-238	1.42E-07		1.42E-07	
Pu-238	1.36E-04		1.36E-04	
Pu-239	1.22E-02	1.17E-08	1.22E-02	4.42E-09
Pu-240	2.74E-04		2.74E-04	
Pu-241	1.49E-02		1.49E-02	
Pu-242	1.23E-07		1.23E-07	
Pu-244	4.08E-16		4.08E-16	
Am-241	1.06E-03		1.06E-03	
Am-243	1.78E-07		1.78E-07	
Cm-243	2.45E-07		2.45E-07	
Cm-244	2.93E-06		2.93E-06	
Cm-245	1.03E-10		1.03E-10	
Cm-246	7.30E-12		7.30E-12	
Cm-247	3.98E-18		3.98E-18	
Cm-248	1.99E-18		1.99E-18	
Total	1.50E+04	3.99E-03	1.50E+04	5.55E+00

8.0 CONCLUSION

Based on the analysis documented in the TBL, the total source term associated with EBR-II (MFC-767) is 1.50E04 Ci. The predominate radionuclides contributing to this activity are mainly contained within the activated metal forming the reactor and include Ni-63 (~45%), Co-60 (~43%), and Fe-55 (~11%). Of this total source term, only 3.99E-03 Ci exists in the above grade regions of the facility.

9.0 REFERENCES

1. "*EBR-II System Design Description",* Volume II – Primary Systems, Chapter 2 – Reactor, Rev. 13, February 15, 1985, Argonne National Laboratory.
2. Leonard J. Koch, *Experimental Breeder Reactor-II (EBR-II) An Integrated Experimental Fast Reactor Nuclear Power Station*.
3. ANL/EBR-127, 1985, "*Extending the Operating Lifetime of EBR-II to 30 Years and Beyond,"* Rev 0, Argonne National Laboratory, February 1985.
4. INL/MIS-06-11931, 2006, "*EBR-II: History and Status,"* Rev. 0, November 2006.
5. C. A. Nesshoefer, personal conversation with D. Pfannestiel (BEA), J. A. Michelbacher (BEA) and P. Hanslee (BEA), May 12, 2009.
6. W0001-1021-ES-02, 2006, "*INL HWMA/RCRA Permit Attachment Part B, MFC, EBR-II Complex,"* October 2006.
7. INL/MIS-06-11930, 2006, "*EBR-II Cold Traps,"* Rev. 0, November 2006
8. F0000-0170-AK-00, 1998, "*Reclassify EBR-II Reactor From A Category 1 Nuclear Facility To A Non-Nuclear (Radiological) Low Hazard Facility,"* Rev. 0, March 11, 1998.
9. C. A. Nesshoefer, personal conversation with L. L. Burke May 6, 2009
10. INEEL/EXT-02-01385, 2005, "*Estimated radiological Inventory Sent from Argonne National Laboratory-West to the Subsurface Disposal Area from 1952 through 1993,"* Rev. 1, November 2005.
11. ANL-6614, 1962, "*Experimental Breeder Reactor-II (EBR-II) Shield Design,"* Rev. 0, September 1962.
12. NUREG/CR-3474, "*Long-Lived Activation Products in Reactor Materials,"* U. S. Nuclear Regulatory Commission.
13. EDF-6381, 2007, "*Materials Test Reactor (MTR) Complex Activity vs. Depth,"* Rev. 1, June 20, 2007.
14. EDF-6133, 2006, "*Engineering Test Reactor (ETR) Vessel Source Term and External Dose Rates,"* Rev. 2, September 12, 2006.
15. B. Shleien, L. A. Slaback, Jr. & B. K. Birky, *Handbook of Health Physics and Radiological Health,* Baltimore: Lippincott Williams & Wilkins, 1998.
16. www.matweb.com for Delco Stellite Stoody 6 Cobalt-Base Cast Alloy
17. INL/EXT-08-14173, 2008, *EBR-II Primary Tank Wash-Water Alternatives Evaluation,"* Rev. 0, May 2008.

18. W. H. Olson, "The Impact of Radionuclides on Maintenance of Experimental Breeder Reactor II, *American Nuclear Society Topical meeting on Nuclear Plant Maintenance, Salt Lake City, Utah, March 23, 1986,"* CONF-860311—1.

19. MicroShield version 7.02, Grove Software, Inc.

20. Herman Cember, *Introduction to Health Physics 3rd Ed.,* New York, McGraw-Hill, 1983.

21. MFC RadCon Survey No. M-20081014-9 Dated October 13, 2008.

22. INL/EXT-06-01189, 2006, "*Technical Information on the Carbonation of the EBR-II Reactor,"* Rev. 0, March 2006

10.0 ATTACHMENTS

A. Ni-63 Activity per Gram 304 SS Calculations for EBR-II Components

B. Ni-63 Activity per Gram Graphite Calculations for EBR-II Neutron Shields

C. Ni-63 Activity per Gram Stellite Calculations for EBR-II Components

D. MicroShield Model of Primary Pump Impeller

E. MicroShield Model of Pentagon Area Floor

ATTACHMENT A

Ni-63 Activity per Gram of 304 SS For EBR-II Reactor Components

Inner Shield Wall	
~Thermal Flux @62.5 MW_{th} (n/cm^2-s)	3.20E+11
λ_{2T} Ni-63 (s^{-1})	2.27E-10

Year	1964	1965	1966	1967	1968	1969	1970	1971	1972	1973	1974	1975
$MW_{th}Hr$	16800	104160	172800	79200	168000	189600	273600	208800	256800	278400	319200	354240
Modeled Irradiation Time (s)	9.68E+05	6.00E+06	9.95E+06	4.56E+06	9.68E+06	1.09E+07	1.58E+07	1.20E+07	1.48E+07	1.60E+07	1.84E+07	2.04E+07
~Decay time (s)	9.47E+08	9.15E+08	8.84E+08	8.52E+08	8.20E+08	7.89E+08	7.57E+08	7.26E+08	6.94E+08	6.63E+08	6.31E+08	6.00E+08
# Ni-63 atoms/g 304 SS (atoms) at year end	1.53E+14	9.46E+14	1.57E+15	7.19E+14	1.53E+15	1.72E+15	2.48E+15	1.89E+15	2.33E+15	2.53E+15	2.89E+15	3.21E+15
# Ni-63 atoms/g 304 SS (atoms), due to this year irradiation, in 1994	1.24E+14	7.71E+14	1.29E+15	5.94E+14	1.27E+15	1.44E+15	2.09E+15	1.61E+15	1.99E+15	2.18E+15	2.51E+15	2.81E+15

Year	1976	1977	1978	1979	1980	1981	1982	1983	1984	1985	1986	1987
$MW_{th}Hr$	434400	393600	396000	384000	391200	328800	290400	302400	326400	364800	350400	400800
Modeled Irradiation Time (s)	2.50E+07	2.27E+07	2.28E+07	2.21E+07	2.25E+07	1.89E+07	1.67E+07	1.74E+07	1.88E+07	2.10E+07	2.02E+07	2.31E+07
~Decay time (s)	5.68E+08	5.36E+08	5.05E+08	4.73E+08	4.42E+08	4.10E+08	3.79E+08	3.47E+08	3.16E+08	2.84E+08	2.52E+08	2.21E+08
# Ni-63 atoms/g 304 SS (atoms) at year end	3.94E+15	3.57E+15	3.59E+15	3.48E+15	3.55E+15	2.98E+15	2.63E+15	2.74E+15	2.96E+15	3.31E+15	3.18E+15	3.63E+15
# Ni-63 atoms/g 304 SS (atoms), due to this year irradiation, in 1994	3.47E+15	3.16E+15	3.21E+15	3.13E+15	3.21E+15	2.72E+15	2.42E+15	2.54E+15	2.76E+15	3.10E+15	3.00E+15	3.46E+15

Year	1988	1989	1990	1991	1992	1993	1994
$MW_{th}Hr$	429600	196800	561600	132000	295200	213600	182400
Modeled Irradiation Time (s)	2.47E+07	1.13E+07	3.23E+07	7.60E+06	1.70E+07	1.23E+07	1.05E+07
~Decay time (s)	1.89E+08	1.58E+08	1.26E+08	9.47E+07	6.31E+07	3.16E+07	0.00E+00
# Ni-63 atoms/g 304 SS (atoms) at year end	3.89E+15	1.79E+15	5.08E+15	1.20E+15	2.68E+15	1.94E+15	1.66E+15
# Ni-63 atoms/g 304 SS (atoms), due to this year irradiation, in 1994	3.73E+15	1.72E+15	4.94E+15	1.17E+15	2.64E+15	1.92E+15	1.66E+15

Total Ni-63 atoms @ End of irradiation (atoms)	7.27E+16
1994 Ni-63 Specific Activity (Ci/g 304 SS)	4.31E-04
2009 Ni-63 Specific Activity (Ci/g 304 SS)	3.88E-04

Inner Shield, Inner Cans	
~Thermal Flux @62.5 MW_{th} (n/cm^2-s)	3.20E+11
λ_{2T} Ni-63 (s^{-1})	2.27E-10

Year	1964	1965	1966	1967	1968	1969	1970	1971	1972	1973	1974	1975
$MW_{th}Hr$	16800	104160	172800	79200	168000	189600	273600	208800	256800	278400	319200	354240
Modeled Irradiation Time (s)	9.68E+05	6.00E+06	9.95E+06	4.56E+06	9.68E+06	1.09E+07	1.58E+07	1.20E+07	1.48E+07	1.60E+07	1.84E+07	2.04E+07
~Decay time (s)	9.47E+08	9.15E+08	8.84E+08	8.52E+08	8.20E+08	7.89E+08	7.57E+08	7.26E+08	6.94E+08	6.63E+08	6.31E+08	6.00E+08
# Ni-63 atoms/g 304 SS (atoms) at year end	1.53E+14	9.46E+14	1.57E+15	7.19E+14	1.53E+15	1.72E+15	2.48E+15	1.89E+15	2.33E+15	2.53E+15	2.89E+15	3.21E+15
# Ni-63 atoms/g 304 SS (atoms), due to this year irradiation, in 1994	1.24E+14	7.71E+14	1.29E+15	5.94E+14	1.27E+15	1.44E+15	2.09E+15	1.61E+15	1.99E+15	2.18E+15	2.51E+15	2.81E+15

Year	1976	1977	1978	1979	1980	1981	1982	1983	1984	1985	1986	1987
$MW_{th}Hr$	434400	393600	396000	384000	391200	328800	290400	302400	326400	364800	350400	400800
Modeled Irradiation Time (s)	2.50E+07	2.27E+07	2.28E+07	2.21E+07	2.25E+07	1.89E+07	1.67E+07	1.74E+07	1.88E+07	2.10E+07	2.02E+07	2.31E+07
~Decay time (s)	5.68E+08	5.36E+08	5.05E+08	4.73E+08	4.42E+08	4.10E+08	3.79E+08	3.47E+08	3.16E+08	2.84E+08	2.52E+08	2.21E+08
# Ni-63 atoms/g 304 SS (atoms) at year end	3.94E+15	3.57E+15	3.59E+15	3.48E+15	3.55E+15	2.98E+15	2.63E+15	2.74E+15	2.96E+15	3.31E+15	3.18E+15	3.63E+15
# Ni-63 atoms/g 304 SS (atoms), due to this year irradiation, in 1994	3.47E+15	3.16E+15	3.21E+15	3.13E+15	3.21E+15	2.72E+15	2.42E+15	2.54E+15	2.76E+15	3.10E+15	3.00E+15	3.46E+15

Year	1988	1989	1990	1991	1992	1993	1994
$MW_{th}Hr$	429600	196800	561600	132000	295200	213600	182400
Modeled Irradiation Time (s)	2.47E+07	1.13E+07	3.23E+07	7.60E+06	1.70E+07	1.23E+07	1.05E+07
~Decay time (s)	1.89E+08	1.58E+08	1.26E+08	9.47E+07	6.31E+07	3.16E+07	0.00E+00
# Ni-63 atoms/g 304 SS (atoms) at year end	3.89E+15	1.79E+15	5.08E+15	1.20E+15	2.68E+15	1.94E+15	1.66E+15
# Ni-63 atoms/g 304 SS (atoms), due to this year irradiation, in 1994	3.73E+15	1.72E+15	4.94E+15	1.17E+15	2.64E+15	1.92E+15	1.66E+15

Total Ni-63 atoms @ End of irradiation (atoms)	7.27E+16
1994 Ni-63 Specific Activity (Ci/g 304 SS)	4.31E-04
2009 Ni-63 Specific Activity (Ci/g 304 SS)	3.88E-04

Inner Shield, Outer Cans	
~φ (n/cm^2-s)	3.20E+11
λ_{2T} (s^{-1})	2.27E-10

Year	1964	1965	1966	1967	1968	1969	1970	1971	1972	1973	1974	1975
$MW_{th}Hr$	16800	104160	172800	79200	168000	189600	273600	208800	256800	278400	319200	354240
Modeled Irradiation Time (s)	9.68E+05	6.00E+06	9.95E+06	4.56E+06	9.68E+06	1.09E+07	1.58E+07	1.20E+07	1.48E+07	1.60E+07	1.84E+07	2.04E+07
~Decay time (s)	9.47E+08	9.15E+08	8.84E+08	8.52E+08	8.20E+08	7.89E+08	7.57E+08	7.26E+08	6.94E+08	6.63E+08	6.31E+08	6.00E+08
# Ni-63 atoms/g 304 SS (atoms) at year end	1.53E+14	9.46E+14	1.57E+15	7.19E+14	1.53E+15	1.72E+15	2.48E+15	1.89E+15	2.33E+15	2.53E+15	2.89E+15	3.21E+15
# Ni-63 atoms/g 304 SS (atoms), due to this year irradiation, in 1994	1.24E+14	7.71E+14	1.29E+15	5.94E+14	1.27E+15	1.44E+15	2.09E+15	1.61E+15	1.99E+15	2.18E+15	2.51E+15	2.81E+15

Year	1976	1977	1978	1979	1980	1981	1982	1983	1984	1985	1986	1987
$MW_{th}Hr$	434400	393600	396000	384000	391200	328800	290400	302400	326400	364800	350400	400800
Modeled Irradiation Time (s)	2.50E+07	2.27E+07	2.28E+07	2.21E+07	2.25E+07	1.89E+07	1.67E+07	1.74E+07	1.88E+07	2.10E+07	2.02E+07	2.31E+07
~Decay time (s)	5.68E+08	5.36E+08	5.05E+08	4.73E+08	4.42E+08	4.10E+08	3.79E+08	3.47E+08	3.16E+08	2.84E+08	2.52E+08	2.21E+08
# Ni-63 atoms/g 304 SS (atoms) at year end	3.94E+15	3.57E+15	3.59E+15	3.48E+15	3.55E+15	2.98E+15	2.63E+15	2.74E+15	2.96E+15	3.31E+15	3.18E+15	3.63E+15
# Ni-63 atoms/g 304 SS (atoms), due to this year irradiation, in 1994	3.47E+15	3.16E+15	3.21E+15	3.13E+15	3.21E+15	2.72E+15	2.42E+15	2.54E+15	2.76E+15	3.10E+15	3.00E+15	3.46E+15

Year	1988	1989	1990	1991	1992	1993	1994
$MW_{th}Hr$	429600	196800	561600	132000	295200	213600	182400
Modeled Irradiation Time (s)	2.47E+07	1.13E+07	3.23E+07	7.60E+06	1.70E+07	1.23E+07	1.05E+07
~Decay time (s)	1.89E+08	1.58E+08	1.26E+08	9.47E+07	6.31E+07	3.16E+07	0.00E+00
# Ni-63 atoms/g 304 SS (atoms) at year end	3.89E+15	1.79E+15	5.08E+15	1.20E+15	2.68E+15	1.94E+15	1.66E+15
# Ni-63 atoms/g 304 SS (atoms), due to this year irradiation, in 1994	3.73E+15	1.72E+15	4.94E+15	1.17E+15	2.64E+15	1.92E+15	1.66E+15

Total Ni-63 atoms @ End of irradiation (atoms)	7.27E+16
1994 Ni-63 Specific Activity (Ci/g 304 SS)	4.31E-04
2009 Ni-63 Specific Activity (Ci/g 304 SS)	3.88E-04

Thermal Baffle	
~φ (n/cm^2-s)	3.00E+11
λ_{2T} (s^{-1})	2.27E-10

Year	1964	1965	1966	1967	1968	1969	1970	1971	1972	1973	1974	1975
$MW_{th}Hr$	16800	104160	172800	79200	168000	189600	273600	208800	256800	278400	319200	354240
Modeled Irradiation Time (s)	9.68E+05	6.00E+06	9.95E+06	4.56E+06	9.68E+06	1.09E+07	1.58E+07	1.20E+07	1.48E+07	1.60E+07	1.84E+07	2.04E+07
~Decay time (s)	9.47E+08	9.15E+08	8.84E+08	8.52E+08	8.20E+08	7.89E+08	7.57E+08	7.26E+08	6.94E+08	6.63E+08	6.31E+08	6.00E+08
# Ni-63 atoms/g 304 SS (atoms) at year end	1.43E+14	8.87E+14	1.47E+15	6.74E+14	1.43E+15	1.61E+15	2.33E+15	1.78E+15	2.18E+15	2.37E+15	2.71E+15	3.01E+15
# Ni-63 atoms/g 304 SS (atoms), due to this year irradiation, in 1994	1.16E+14	7.23E+14	1.21E+15	5.57E+14	1.19E+15	1.35E+15	1.96E+15	1.51E+15	1.87E+15	2.04E+15	2.36E+15	2.63E+15

Year	1976	1977	1978	1979	1980	1981	1982	1983	1984	1985	1986	1987
$MW_{th}Hr$	434400	393600	396000	384000	391200	328800	290400	302400	326400	364800	350400	400800
Modeled Irradiation Time (s)	2.50E+07	2.27E+07	2.28E+07	2.21E+07	2.25E+07	1.89E+07	1.67E+07	1.74E+07	1.88E+07	2.10E+07	2.02E+07	2.31E+07
~Decay time (s)	5.68E+08	5.36E+08	5.05E+08	4.73E+08	4.42E+08	4.10E+08	3.79E+08	3.47E+08	3.16E+08	2.84E+08	2.52E+08	2.21E+08
# Ni-63 atoms/g 304 SS (atoms) at year end	3.69E+15	3.34E+15	3.37E+15	3.26E+15	3.32E+15	2.80E+15	2.47E+15	2.57E+15	2.77E+15	3.10E+15	2.98E+15	3.41E+15
# Ni-63 atoms/g 304 SS (atoms), due to this year irradiation, in 1994	3.25E+15	2.97E+15	3.01E+15	2.94E+15	3.01E+15	2.55E+15	2.27E+15	2.38E+15	2.59E+15	2.91E+15	2.82E+15	3.24E+15

Year	1988	1989	1990	1991	1992	1993	1994
$MW_{th}Hr$	429600	196800	561600	132000	295200	213600	182400
Modeled Irradiation Time (s)	2.47E+07	1.13E+07	3.23E+07	7.60E+06	1.70E+07	1.23E+07	1.05E+07
~Decay time (s)	1.89E+08	1.58E+08	1.26E+08	9.47E+07	6.31E+07	3.16E+07	0.00E+00
# Ni-63 atoms/g 304 SS (atoms) at year end	3.65E+15	1.67E+15	4.77E+15	1.12E+15	2.51E+15	1.82E+15	1.55E+15
# Ni-63 atoms/g 304 SS (atoms), due to this year irradiation, in 1994	3.50E+15	1.62E+15	4.64E+15	1.10E+15	2.48E+15	1.80E+15	1.55E+15

Total Ni-63 atoms @ End of irradiation (atoms)	6.81E+16
1994 Ni-63 Specific Activity (Ci/g 304 SS)	4.04E-04
2009 Ni-63 Specific Activity (Ci/g 304 SS)	3.64E-04

Vessel Wall	
~φ (n/cm^2-s)	2.50E+11
λ_{2T} (s^{-1})	2.26E-10

Year	1964	1965	1966	1967	1968	1969	1970	1971	1972	1973	1974	1975
$MW_{th}Hr$	16800	104160	172800	79200	168000	189600	273600	208800	256800	278400	319200	354240
Modeled Irradiation Time (s)	9.68E+05	6.00E+06	9.95E+06	4.56E+06	9.68E+06	1.09E+07	1.58E+07	1.20E+07	1.48E+07	1.60E+07	1.84E+07	2.04E+07
~Decay time (s)	9.47E+08	9.15E+08	8.84E+08	8.52E+08	8.20E+08	7.89E+08	7.57E+08	7.26E+08	6.94E+08	6.63E+08	6.31E+08	6.00E+08
# Ni-63 atoms/g 304 SS (atoms) at year end	1.19E+14	7.39E+14	1.23E+15	5.62E+14	1.19E+15	1.34E+15	1.94E+15	1.48E+15	1.82E+15	1.97E+15	2.26E+15	2.51E+15
# Ni-63 atoms/g 304 SS (atoms), due to this year irradiation, in 1994	9.66E+13	6.03E+14	1.01E+15	4.65E+14	9.92E+14	1.13E+15	1.64E+15	1.26E+15	1.56E+15	1.70E+15	1.96E+15	2.19E+15

Year	1976	1977	1978	1979	1980	1981	1982	1983	1984	1985	1986	1987
$MW_{th}Hr$	434400	393600	396000	384000	391200	328800	290400	302400	326400	364800	350400	400800
Modeled Irradiation Time (s)	2.50E+07	2.27E+07	2.28E+07	2.21E+07	2.25E+07	1.89E+07	1.67E+07	1.74E+07	1.88E+07	2.10E+07	2.02E+07	2.31E+07
~Decay time (s)	5.68E+08	5.36E+08	5.05E+08	4.73E+08	4.42E+08	4.10E+08	3.79E+08	3.47E+08	3.16E+08	2.84E+08	2.52E+08	2.21E+08
# Ni-63 atoms/g 304 SS (atoms) at year end	3.08E+15	2.79E+15	2.80E+15	2.72E+15	2.77E+15	2.33E+15	2.06E+15	2.14E+15	2.31E+15	2.58E+15	2.48E+15	2.84E+15
# Ni-63 atoms/g 304 SS (atoms), due to this year irradiation, in 1994	2.71E+15	2.47E+15	2.51E+15	2.45E+15	2.51E+15	2.13E+15	1.89E+15	1.98E+15	2.16E+15	2.43E+15	2.35E+15	2.70E+15

Year	1988	1989	1990	1991	1992	1993	1994
$MW_{th}Hr$	429600	196800	561600	132000	295200	213600	182400
Modeled Irradiation Time (s)	2.47E+07	1.13E+07	3.23E+07	7.60E+06	1.70E+07	1.23E+07	1.05E+07
~Decay time (s)	1.89E+08	1.58E+08	1.26E+08	9.47E+07	6.31E+07	3.16E+07	0.00E+00
# Ni-63 atoms/g 304 SS (atoms) at year end	3.04E+15	1.40E+15	3.97E+15	9.36E+14	2.09E+15	1.51E+15	1.29E+15
# Ni-63 atoms/g 304 SS (atoms), due to this year irradiation, in 1994	2.92E+15	1.35E+15	3.86E+15	9.17E+14	2.06E+15	1.50E+15	1.29E+15

Total Ni-63 atoms @ End of irradiation (atoms)	5.68E+16
1994 Ni-63 Specific Activity (Ci/g 304 SS)	3.37E-04
2009 Ni-63 Specific Activity (Ci/g 304 SS)	3.04E-04

Shield Liner	
~φ (n/cm^2-s)	2.30E+11
λ_{2T} (s^{-1})	2.25E-10

Year	1964	1965	1966	1967	1968	1969	1970	1971	1972	1973	1974	1975
$MW_{th}Hr$	16800	104160	172800	79200	168000	189600	273600	208800	256800	278400	319200	354240
Modeled Irradiation Time (s)	9.68E+05	6.00E+06	9.95E+06	4.56E+06	9.68E+06	1.09E+07	1.58E+07	1.20E+07	1.48E+07	1.60E+07	1.84E+07	2.04E+07
~Decay time (s)	9.47E+08	9.15E+08	8.84E+08	8.52E+08	8.20E+08	7.89E+08	7.57E+08	7.26E+08	6.94E+08	6.63E+08	6.31E+08	6.00E+08
# Ni-63 atoms/g 304 SS (atoms) at year end	1.10E+14	6.80E+14	1.13E+15	5.17E+14	1.10E+15	1.24E+15	1.78E+15	1.36E+15	1.67E+15	1.82E+15	2.08E+15	2.31E+15
# Ni-63 atoms/g 304 SS (atoms), due to this year irradiation, in 1994	8.89E+13	5.55E+14	9.26E+14	4.28E+14	9.13E+14	1.04E+15	1.51E+15	1.16E+15	1.43E+15	1.57E+15	1.81E+15	2.02E+15

Year	1976	1977	1978	1979	1980	1981	1982	1983	1984	1985	1986	1987
$MW_{th}Hr$	434400	393600	396000	384000	391200	328800	290400	302400	326400	364800	350400	400800
Modeled Irradiation Time (s)	2.50E+07	2.27E+07	2.28E+07	2.21E+07	2.25E+07	1.89E+07	1.67E+07	1.74E+07	1.88E+07	2.10E+07	2.02E+07	2.31E+07
~Decay time (s)	5.68E+08	5.36E+08	5.05E+08	4.73E+08	4.42E+08	4.10E+08	3.79E+08	3.47E+08	3.16E+08	2.84E+08	2.52E+08	2.21E+08
# Ni-63 atoms/g 304 SS (atoms) at year end	2.83E+15	2.56E+15	2.58E+15	2.50E+15	2.55E+15	2.14E+15	1.89E+15	1.97E+15	2.13E+15	2.38E+15	2.28E+15	2.61E+15
# Ni-63 atoms/g 304 SS (atoms), due to this year irradiation, in 1994	2.49E+15	2.28E+15	2.31E+15	2.25E+15	2.31E+15	1.96E+15	1.74E+15	1.82E+15	1.98E+15	2.23E+15	2.16E+15	2.49E+15

Year	1988	1989	1990	1991	1992	1993	1994
$MW_{th}Hr$	429600	196800	561600	132000	295200	213600	182400
Modeled Irradiation Time (s)	2.47E+07	1.13E+07	3.23E+07	7.60E+06	1.70E+07	1.23E+07	1.05E+07
~Decay time (s)	1.89E+08	1.58E+08	1.26E+08	9.47E+07	6.31E+07	3.16E+07	0.00E+00
# Ni-63 atoms/g 304 SS (atoms) at year end	2.80E+15	1.28E+15	3.65E+15	8.61E+14	1.92E+15	1.39E+15	1.19E+15
# Ni-63 atoms/g 304 SS (atoms), due to this year irradiation, in 1994	2.68E+15	1.24E+15	3.55E+15	8.44E+14	1.90E+15	1.38E+15	1.19E+15

Total Ni-63 atoms @ End of irradiation (atoms)	5.22E+16
1994 Ni-63 Specific Activity (Ci/g 304 SS)	3.10E-04
2009 Ni-63 Specific Activity (Ci/g 304 SS)	2.79E-04

Outer Shield 1st Row Cans	
~φ (n/cm^2-s)	1.40E+11
λ_{2T} (s^{-1})	2.23E-10

Year	1964	1965	1966	1967	1968	1969	1970	1971	1972	1973	1974	1975
$MW_{th}Hr$	16800	104160	172800	79200	168000	189600	273600	208800	256800	278400	319200	354240
Modeled Irradiation Time (s)	9.68E+05	6.00E+06	9.95E+06	4.56E+06	9.68E+06	1.09E+07	1.58E+07	1.20E+07	1.48E+07	1.60E+07	1.84E+07	2.04E+07
~Decay time (s)	9.47E+08	9.15E+08	8.84E+08	8.52E+08	8.20E+08	7.89E+08	7.57E+08	7.26E+08	6.94E+08	6.63E+08	6.31E+08	6.00E+08
# Ni-63 atoms/g 304 SS (atoms) at year end	6.68E+13	4.14E+14	6.86E+14	3.15E+14	6.67E+14	7.53E+14	1.09E+15	8.29E+14	1.02E+15	1.10E+15	1.27E+15	1.41E+15
# Ni-63 atoms/g 304 SS (atoms), due to this year irradiation, in 1994	5.42E+13	3.38E+14	5.64E+14	2.61E+14	5.56E+14	6.32E+14	9.18E+14	7.06E+14	8.74E+14	9.54E+14	1.10E+15	1.23E+15

Year	1976	1977	1978	1979	1980	1981	1982	1983	1984	1985	1986	1987
$MW_{th}Hr$	434400	393600	396000	384000	391200	328800	290400	302400	326400	364800	350400	400800
Modeled Irradiation Time (s)	2.50E+07	2.27E+07	2.28E+07	2.21E+07	2.25E+07	1.89E+07	1.67E+07	1.74E+07	1.88E+07	2.10E+07	2.02E+07	2.31E+07
~Decay time (s)	5.68E+08	5.36E+08	5.05E+08	4.73E+08	4.42E+08	4.10E+08	3.79E+08	3.47E+08	3.16E+08	2.84E+08	2.52E+08	2.21E+08
# Ni-63 atoms/g 304 SS (atoms) at year end	1.72E+15	1.56E+15	1.57E+15	1.52E+15	1.55E+15	1.30E+15	1.15E+15	1.20E+15	1.29E+15	1.45E+15	1.39E+15	1.59E+15
# Ni-63 atoms/g 304 SS (atoms), due to this year irradiation, in 1994	1.52E+15	1.39E+15	1.40E+15	1.37E+15	1.41E+15	1.19E+15	1.06E+15	1.11E+15	1.21E+15	1.36E+15	1.31E+15	1.51E+15

Year	1988	1989	1990	1991	1992	1993	1994
$MW_{th}Hr$	429600	196800	561600	132000	295200	213600	182400
Modeled Irradiation Time (s)	2.47E+07	1.13E+07	3.23E+07	7.60E+06	1.70E+07	1.23E+07	1.05E+07
~Decay time (s)	1.89E+08	1.58E+08	1.26E+08	9.47E+07	6.31E+07	3.16E+07	0.00E+00
# Ni-63 atoms/g 304 SS (atoms) at year end	1.70E+15	7.81E+14	2.22E+15	5.24E+14	1.17E+15	8.48E+14	7.24E+14
# Ni-63 atoms/g 304 SS (atoms), due to this year irradiation, in 1994	1.63E+15	7.55E+14	2.16E+15	5.14E+14	1.16E+15	8.42E+14	7.24E+14

Total Ni-63 atoms @ End of irradiation (atoms)	3.18E+16
1994 Ni-63 Specific Activity (Ci/g 304 SS)	1.89E-04
2009 Ni-63 Specific Activity (Ci/g 304 SS)	1.70E-04

Outer Shield 2nd Row Can	
~φ (n/cm^2-s)	5.50E+07
λ_{2T} (s^{-1})	2.19E-10

Year	1964	1965	1966	1967	1968	1969	1970	1971	1972	1973	1974	1975
$MW_{th}Hr$	16800	104160	172800	79200	168000	189600	273600	208800	256800	278400	319200	354240
Modeled Irradiation Time (s)	9.68E+05	6.00E+06	9.95E+06	4.56E+06	9.68E+06	1.09E+07	1.58E+07	1.20E+07	1.48E+07	1.60E+07	1.84E+07	2.04E+07
~Decay time (s)	9.47E+08	9.15E+08	8.84E+08	8.52E+08	8.20E+08	7.89E+08	7.57E+08	7.26E+08	6.94E+08	6.63E+08	6.31E+08	6.00E+08
# Ni-63 atoms/g 304 SS (atoms) at year end	2.62E+10	1.63E+11	2.70E+11	1.24E+11	2.62E+11	2.96E+11	4.27E+11	3.26E+11	4.00E+11	4.34E+11	4.98E+11	5.52E+11
# Ni-63 atoms/g 304 SS (atoms), due to this year irradiation, in 1994	2.13E+10	1.33E+11	2.22E+11	1.03E+11	2.19E+11	2.49E+11	3.61E+11	2.78E+11	3.44E+11	3.75E+11	4.33E+11	4.84E+11

Year	1976	1977	1978	1979	1980	1981	1982	1983	1984	1985	1986	1987
$MW_{th}Hr$	434400	393600	396000	384000	391200	328800	290400	302400	326400	364800	350400	400800
Modeled Irradiation Time (s)	2.50E+07	2.27E+07	2.28E+07	2.21E+07	2.25E+07	1.89E+07	1.67E+07	1.74E+07	1.88E+07	2.10E+07	2.02E+07	2.31E+07
~Decay time (s)	5.68E+08	5.36E+08	5.05E+08	4.73E+08	4.42E+08	4.10E+08	3.79E+08	3.47E+08	3.16E+08	2.84E+08	2.52E+08	2.21E+08
# Ni-63 atoms/g 304 SS (atoms) at year end	6.77E+11	6.13E+11	6.17E+11	5.98E+11	6.10E+11	5.12E+11	4.53E+11	4.71E+11	5.09E+11	5.68E+11	5.46E+11	6.24E+11
# Ni-63 atoms/g 304 SS (atoms), due to this year irradiation, in 1994	5.97E+11	5.45E+11	5.52E+11	5.39E+11	5.53E+11	4.68E+11	4.17E+11	4.37E+11	4.75E+11	5.34E+11	5.17E+11	5.95E+11

Year	1988	1989	1990	1991	1992	1993	1994
$MW_{th}Hr$	429600	196800	561600	132000	295200	213600	182400
Modeled Irradiation Time (s)	2.47E+07	1.13E+07	3.23E+07	7.60E+06	1.70E+07	1.23E+07	1.05E+07
~Decay time (s)	1.89E+08	1.58E+08	1.26E+08	9.47E+07	6.31E+07	3.16E+07	0.00E+00
# Ni-63 atoms/g 304 SS (atoms) at year end	6.69E+11	3.07E+11	8.74E+11	2.06E+11	4.60E+11	3.33E+11	2.85E+11
# Ni-63 atoms/g 304 SS (atoms), due to this year irradiation, in 1994	6.41E+11	2.97E+11	8.50E+11	2.02E+11	4.54E+11	3.31E+11	2.85E+11

Total Ni-63 atoms @ End of irradiation (atoms)	1.25E+13
1994 Ni-63 Specific Activity (Ci/g 304 SS)	7.42E-08
2009 Ni-63 Specific Activity (Ci/g 304 SS)	6.69E-08

Outer Shield 3rd Row Cans	
~φ (n/cm^2-s)	3.50E+08
λ_{2T} (s^{-1})	2.19E-10

Year	1964	1965	1966	1967	1968	1969	1970	1971	1972	1973	1974	1975
$MW_{th}Hr$	16800	104160	172800	79200	168000	189600	273600	208800	256800	278400	319200	354240
Modeled Irradiation Time (s)	9.68E+05	6.00E+06	9.95E+06	4.56E+06	9.68E+06	1.09E+07	1.58E+07	1.20E+07	1.48E+07	1.60E+07	1.84E+07	2.04E+07
~Decay time (s)	9.47E+08	9.15E+08	8.84E+08	8.52E+08	8.20E+08	7.89E+08	7.57E+08	7.26E+08	6.94E+08	6.63E+08	6.31E+08	6.00E+08
# Ni-63 atoms/g 304 SS (atoms) at year end	1.67E+11	1.03E+12	1.72E+12	7.87E+11	1.67E+12	1.88E+12	2.71E+12	2.07E+12	2.55E+12	2.76E+12	3.17E+12	3.51E+12
# Ni-63 atoms/g 304 SS (atoms), due to this year irradiation, in 1994	1.36E+11	8.46E+11	1.41E+12	6.53E+11	1.39E+12	1.58E+12	2.30E+12	1.77E+12	2.19E+12	2.39E+12	2.76E+12	3.08E+12

Year	1976	1977	1978	1979	1980	1981	1982	1983	1984	1985	1986	1987
$MW_{th}Hr$	434400	393600	396000	384000	391200	328800	290400	302400	326400	364800	350400	400800
Modeled Irradiation Time (s)	2.50E+07	2.27E+07	2.28E+07	2.21E+07	2.25E+07	1.89E+07	1.67E+07	1.74E+07	1.88E+07	2.10E+07	2.02E+07	2.31E+07
~Decay time (s)	5.68E+08	5.36E+08	5.05E+08	4.73E+08	4.42E+08	4.10E+08	3.79E+08	3.47E+08	3.16E+08	2.84E+08	2.52E+08	2.21E+08
# Ni-63 atoms/g 304 SS (atoms) at year end	4.31E+12	3.90E+12	3.93E+12	3.81E+12	3.88E+12	3.26E+12	2.88E+12	3.00E+12	3.24E+12	3.62E+12	3.48E+12	3.97E+12
# Ni-63 atoms/g 304 SS (atoms), due to this year irradiation, in 1994	3.80E+12	3.47E+12	3.51E+12	3.43E+12	3.52E+12	2.98E+12	2.65E+12	2.78E+12	3.02E+12	3.40E+12	3.29E+12	3.79E+12

Year	1988	1989	1990	1991	1992	1993	1994
$MW_{th}Hr$	429600	196800	561600	132000	295200	213600	182400
Modeled Irradiation Time (s)	2.47E+07	1.13E+07	3.23E+07	7.60E+06	1.70E+07	1.23E+07	1.05E+07
~Decay time (s)	1.89E+08	1.58E+08	1.26E+08	9.47E+07	6.31E+07	3.16E+07	0.00E+00
# Ni-63 atoms/g 304 SS (atoms) at year end	4.26E+12	1.95E+12	5.56E+12	1.31E+12	2.93E+12	2.12E+12	1.81E+12
# Ni-63 atoms/g 304 SS (atoms), due to this year irradiation, in 1994	4.08E+12	1.89E+12	5.41E+12	1.28E+12	2.89E+12	2.11E+12	1.81E+12

Total Ni-63 atoms @ End of irradiation (atoms)	7.96E+13
1994 Ni-63 Specific Activity (Ci/g 304 SS)	4.72E-07
2009 Ni-63 Specific Activity (Ci/g 304 SS)	4.26E-07

Outer Shield 4th Row Cans	
~φ (n/cm^2-s)	3.30E+06
λ_{2T} (s^{-1})	2.19E-10

Year	1964	1965	1966	1967	1968	1969	1970	1971	1972	1973	1974	1975
$MW_{th}Hr$	16800	104160	172800	79200	168000	189600	273600	208800	256800	278400	319200	354240
Modeled Irradiation Time (s)	9.68E+05	6.00E+06	9.95E+06	4.56E+06	9.68E+06	1.09E+07	1.58E+07	1.20E+07	1.48E+07	1.60E+07	1.84E+07	2.04E+07
~Decay time (s)	9.47E+08	9.15E+08	8.84E+08	8.52E+08	8.20E+08	7.89E+08	7.57E+08	7.26E+08	6.94E+08	6.63E+08	6.31E+08	6.00E+08
# Ni-63 atoms/g 304 SS (atoms) at year end	1.57E+09	9.76E+09	1.62E+10	7.42E+09	1.57E+10	1.77E+10	2.56E+10	1.95E+10	2.40E+10	2.60E+10	2.99E+10	3.31E+10
# Ni-63 atoms/g 304 SS (atoms), due to this year irradiation, in 1994	1.28E+09	7.98E+09	1.33E+10	6.15E+09	1.31E+10	1.49E+10	2.17E+10	1.67E+10	2.06E+10	2.25E+10	2.60E+10	2.90E+10

Year	1976	1977	1978	1979	1980	1981	1982	1983	1984	1985	1986	1987
$MW_{th}Hr$	434400	393600	396000	384000	391200	328800	290400	302400	326400	364800	350400	400800
Modeled Irradiation Time (s)	2.50E+07	2.27E+07	2.28E+07	2.21E+07	2.25E+07	1.89E+07	1.67E+07	1.74E+07	1.88E+07	2.10E+07	2.02E+07	2.31E+07
~Decay time (s)	5.68E+08	5.36E+08	5.05E+08	4.73E+08	4.42E+08	4.10E+08	3.79E+08	3.47E+08	3.16E+08	2.84E+08	2.52E+08	2.21E+08
# Ni-63 atoms/g 304 SS (atoms) at year end	4.06E+10	3.68E+10	3.70E+10	3.59E+10	3.66E+10	3.07E+10	2.72E+10	2.83E+10	3.05E+10	3.41E+10	3.28E+10	3.75E+10
# Ni-63 atoms/g 304 SS (atoms), due to this year irradiation, in 1994	3.58E+10	3.27E+10	3.31E+10	3.24E+10	3.32E+10	2.81E+10	2.50E+10	2.62E+10	2.85E+10	3.20E+10	3.10E+10	3.57E+10

Year	1988	1989	1990	1991	1992	1993	1994
$MW_{th}Hr$	429600	196800	561600	132000	295200	213600	182400
Modeled Irradiation Time (s)	2.47E+07	1.13E+07	3.23E+07	7.60E+06	1.70E+07	1.23E+07	1.05E+07
~Decay time (s)	1.89E+08	1.58E+08	1.26E+08	9.47E+07	6.31E+07	3.16E+07	0.00E+00
# Ni-63 atoms/g 304 SS (atoms) at year end	4.02E+10	1.84E+10	5.24E+10	1.24E+10	2.76E+10	2.00E+10	1.71E+10
# Ni-63 atoms/g 304 SS (atoms), due to this year irradiation, in 1994	3.85E+10	1.78E+10	5.10E+10	1.21E+10	2.72E+10	1.99E+10	1.71E+10

Total Ni-63 atoms @ End of irradiation (atoms)	7.51E+11
1994 Ni-63 Specific Activity (Ci/g 304 SS)	4.45E-09
2009 Ni-63 Specific Activity (Ci/g 304 SS)	4.01E-09

Outer Shield 5th Row Cans	
~φ (n/cm^2-s)	3.50E+06
λ_{2T} (s^{-1})	2.19E-10

Year	1964	1965	1966	1967	1968	1969	1970	1971	1972	1973	1974	1975
$MW_{th}Hr$	16800	104160	172800	79200	168000	189600	273600	208800	256800	278400	319200	354240
Modeled Irradiation Time (s)	9.68E+05	6.00E+06	9.95E+06	4.56E+06	9.68E+06	1.09E+07	1.58E+07	1.20E+07	1.48E+07	1.60E+07	1.84E+07	2.04E+07
~Decay time (s)	9.47E+08	9.15E+08	8.84E+08	8.52E+08	8.20E+08	7.89E+08	7.57E+08	7.26E+08	6.94E+08	6.63E+08	6.31E+08	6.00E+08
# Ni-63 atoms/g 304 SS (atoms) at year end	1.67E+09	1.03E+10	1.72E+10	7.87E+09	1.67E+10	1.88E+10	2.71E+10	2.07E+10	2.55E+10	2.76E+10	3.17E+10	3.51E+10
# Ni-63 atoms/g 304 SS (atoms), due to this year irradiation, in 1994	1.36E+09	8.46E+09	1.41E+10	6.53E+09	1.39E+10	1.58E+10	2.30E+10	1.77E+10	2.19E+10	2.39E+10	2.76E+10	3.08E+10

Year	1976	1977	1978	1979	1980	1981	1982	1983	1984	1985	1986	1987
$MW_{th}Hr$	434400	393600	396000	384000	391200	328800	290400	302400	326400	364800	350400	400800
Modeled Irradiation Time (s)	2.50E+07	2.27E+07	2.28E+07	2.21E+07	2.25E+07	1.89E+07	1.67E+07	1.74E+07	1.88E+07	2.10E+07	2.02E+07	2.31E+07
~Decay time (s)	5.68E+08	5.36E+08	5.05E+08	4.73E+08	4.42E+08	4.10E+08	3.79E+08	3.47E+08	3.16E+08	2.84E+08	2.52E+08	2.21E+08
# Ni-63 atoms/g 304 SS (atoms) at year end	4.31E+10	3.90E+10	3.93E+10	3.81E+10	3.88E+10	3.26E+10	2.88E+10	3.00E+10	3.24E+10	3.62E+10	3.48E+10	3.97E+10
# Ni-63 atoms/g 304 SS (atoms), due to this year irradiation, in 1994	3.80E+10	3.47E+10	3.51E+10	3.43E+10	3.52E+10	2.98E+10	2.65E+10	2.78E+10	3.02E+10	3.40E+10	3.29E+10	3.79E+10

Year	1988	1989	1990	1991	1992	1993	1994
$MW_{th}Hr$	429600	196800	561600	132000	295200	213600	182400
Modeled Irradiation Time (s)	2.47E+07	1.13E+07	3.23E+07	7.60E+06	1.70E+07	1.23E+07	1.05E+07
~Decay time (s)	1.89E+08	1.58E+08	1.26E+08	9.47E+07	6.31E+07	3.16E+07	0.00E+00
# Ni-63 atoms/g 304 SS (atoms) at year end	4.26E+10	1.95E+10	5.56E+10	1.31E+10	2.93E+10	2.12E+10	1.81E+10
# Ni-63 atoms/g 304 SS (atoms), due to this year irradiation, in 1994	4.08E+10	1.89E+10	5.41E+10	1.28E+10	2.89E+10	2.11E+10	1.81E+10

Total Ni-63 atoms @ End of irradiation (atoms)	7.96E+11
1994 Ni-63 Specific Activity (Ci/g 304 SS)	4.72E-09
2009 Ni-63 Specific Activity (Ci/g 304 SS)	4.26E-09

Upper Flow Baffle/Hold down Fingers	
~φ (n/cm^2-s)	3.50E+10
λ_{2T} (s^{-1})	2.20E-10

Year	1964	1965	1966	1967	1968	1969	1970	1971	1972	1973	1974	1975
$MW_{th}Hr$	16800	104160	172800	79200	168000	189600	273600	208800	256800	278400	319200	354240
Modeled Irradiation Time (s)	9.68E+05	6.00E+06	9.95E+06	4.56E+06	9.68E+06	1.09E+07	1.58E+07	1.20E+07	1.48E+07	1.60E+07	1.84E+07	2.04E+07
~Decay time (s)	9.47E+08	9.15E+08	8.84E+08	8.52E+08	8.20E+08	7.89E+08	7.57E+08	7.26E+08	6.94E+08	6.63E+08	6.31E+08	6.00E+08
# Ni-63 atoms/g 304 SS (atoms) at year end	1.67E+13	1.03E+14	1.72E+14	7.87E+13	1.67E+14	1.88E+14	2.71E+14	2.07E+14	2.55E+14	2.76E+14	3.17E+14	3.51E+14
# Ni-63 atoms/g 304 SS (atoms), due to this year irradiation, in 1994	1.36E+13	8.46E+13	1.41E+14	6.53E+13	1.39E+14	1.58E+14	2.30E+14	1.77E+14	2.19E+14	2.39E+14	2.76E+14	3.08E+14

Year	1976	1977	1978	1979	1980	1981	1982	1983	1984	1985	1986	1987
$MW_{th}Hr$	434400	393600	396000	384000	391200	328800	290400	302400	326400	364800	350400	400800
Modeled Irradiation Time (s)	2.50E+07	2.27E+07	2.28E+07	2.21E+07	2.25E+07	1.89E+07	1.67E+07	1.74E+07	1.88E+07	2.10E+07	2.02E+07	2.31E+07
~Decay time (s)	5.68E+08	5.36E+08	5.05E+08	4.73E+08	4.42E+08	4.10E+08	3.79E+08	3.47E+08	3.16E+08	2.84E+08	2.52E+08	2.21E+08
# Ni-63 atoms/g 304 SS (atoms) at year end	4.31E+14	3.90E+14	3.93E+14	3.81E+14	3.88E+14	3.26E+14	2.88E+14	3.00E+14	3.24E+14	3.62E+14	3.48E+14	3.97E+14
# Ni-63 atoms/g 304 SS (atoms), due to this year irradiation, in 1994	3.80E+14	3.47E+14	3.51E+14	3.43E+14	3.52E+14	2.98E+14	2.65E+14	2.78E+14	3.02E+14	3.40E+14	3.29E+14	3.79E+14

Year	1988	1989	1990	1991	1992	1993	1994
$MW_{th}Hr$	429600	196800	561600	132000	295200	213600	182400
Modeled Irradiation Time (s)	2.47E+07	1.13E+07	3.23E+07	7.60E+06	1.70E+07	1.23E+07	1.05E+07
~Decay time (s)	1.89E+08	1.58E+08	1.26E+08	9.47E+07	6.31E+07	3.16E+07	0.00E+00
# Ni-63 atoms/g 304 SS (atoms) at year end	4.26E+14	1.95E+14	5.56E+14	1.31E+14	2.93E+14	2.12E+14	1.81E+14
# Ni-63 atoms/g 304 SS (atoms), due to this year irradiation, in 1994	4.09E+14	1.89E+14	5.41E+14	1.28E+14	2.89E+14	2.11E+14	1.81E+14

Total Ni-63 atoms @ End of irradiation (atoms)	7.96E+15
1994 Ni-63 Specific Activity (Ci/g 304 SS)	4.72E-05
2009 Ni-63 Specific Activity (Ci/g 304 SS)	4.26E-05

Reactor Cover Thermal Shield	
~φ (n/cm^2-s)	4.00E+09
λ_{2T} (s^{-1})	2.20E-10

Year	1964	1965	1966	1967	1968	1969	1970	1971	1972	1973	1974	1975
$MW_{th}Hr$	16800	104160	172800	79200	168000	189600	273600	208800	256800	278400	319200	354240
Modeled Irradiation Time (s)	9.68E+05	6.00E+06	9.95E+06	4.56E+06	9.68E+06	1.09E+07	1.58E+07	1.20E+07	1.48E+07	1.60E+07	1.84E+07	2.04E+07
~Decay time (s)	9.47E+08	9.15E+08	8.84E+08	8.52E+08	8.20E+08	7.89E+08	7.57E+08	7.26E+08	6.94E+08	6.63E+08	6.31E+08	6.00E+08
# Ni-63 atoms/g 304 SS (atoms) at year end	1.91E+12	1.18E+13	1.96E+13	8.99E+12	1.91E+13	2.15E+13	3.10E+13	2.37E+13	2.91E+13	3.16E+13	3.62E+13	4.01E+13
# Ni-63 atoms/g 304 SS (atoms), due to this year irradiation, in 1994	1.55E+12	9.67E+12	1.62E+13	7.46E+12	1.59E+13	1.81E+13	2.63E+13	2.02E+13	2.50E+13	2.73E+13	3.15E+13	3.52E+13

Year	1976	1977	1978	1979	1980	1981	1982	1983	1984	1985	1986	1987
$MW_{th}Hr$	434400	393600	396000	384000	391200	328800	290400	302400	326400	364800	350400	400800
Modeled Irradiation Time (s)	2.50E+07	2.27E+07	2.28E+07	2.21E+07	2.25E+07	1.89E+07	1.67E+07	1.74E+07	1.88E+07	2.10E+07	2.02E+07	2.31E+07
~Decay time (s)	5.68E+08	5.36E+08	5.05E+08	4.73E+08	4.42E+08	4.10E+08	3.79E+08	3.47E+08	3.16E+08	2.84E+08	2.52E+08	2.21E+08
# Ni-63 atoms/g 304 SS (atoms) at year end	4.92E+13	4.46E+13	4.49E+13	4.35E+13	4.43E+13	3.73E+13	3.29E+13	3.43E+13	3.70E+13	4.13E+13	3.97E+13	4.54E+13
# Ni-63 atoms/g 304 SS (atoms), due to this year irradiation, in 1994	4.34E+13	3.96E+13	4.02E+13	3.92E+13	4.02E+13	3.41E+13	3.03E+13	3.18E+13	3.45E+13	3.88E+13	3.76E+13	4.33E+13

Year	1988	1989	1990	1991	1992	1993	1994
$MW_{th}Hr$	429600	196800	561600	132000	295200	213600	182400
Modeled Irradiation Time (s)	2.47E+07	1.13E+07	3.23E+07	7.60E+06	1.70E+07	1.23E+07	1.05E+07
~Decay time (s)	1.89E+08	1.58E+08	1.26E+08	9.47E+07	6.31E+07	3.16E+07	0.00E+00
# Ni-63 atoms/g 304 SS (atoms) at year end	4.87E+13	2.23E+13	6.36E+13	1.50E+13	3.35E+13	2.42E+13	2.07E+13
# Ni-63 atoms/g 304 SS (atoms), due to this year irradiation, in 1994	4.67E+13	2.16E+13	6.18E+13	1.47E+13	3.30E+13	2.41E+13	2.07E+13

Total Ni-63 atoms @ End of irradiation (atoms)	9.10E+14
1994 Ni-63 Specific Activity (Ci/g 304 SS)	5.40E-06
2009 Ni-63 Specific Activity (Ci/g 304 SS)	4.86E-06

Reactor Closure Head Lower Surface	
~φ (n/cm^2-s)	3.00E+09
λ_{2T} (s^{-1})	2.19E-10

Year	1964	1965	1966	1967	1968	1969	1970	1971	1972	1973	1974	1975
$MW_{th}Hr$	16800	104160	172800	79200	168000	189600	273600	208800	256800	278400	319200	354240
Modeled Irradiation Time (s)	9.68E+05	6.00E+06	9.95E+06	4.56E+06	9.68E+06	1.09E+07	1.58E+07	1.20E+07	1.48E+07	1.60E+07	1.84E+07	2.04E+07
~Decay time (s)	9.47E+08	9.15E+08	8.84E+08	8.52E+08	8.20E+08	7.89E+08	7.57E+08	7.26E+08	6.94E+08	6.63E+08	6.31E+08	6.00E+08
# Ni-63 atoms/g 304 SS (atoms) at year end	1.43E+12	8.87E+12	1.47E+13	6.74E+12	1.43E+13	1.61E+13	2.33E+13	1.78E+13	2.18E+13	2.37E+13	2.71E+13	3.01E+13
# Ni-63 atoms/g 304 SS (atoms), due to this year irradiation, in 1994	1.16E+12	7.25E+12	1.21E+13	5.59E+12	1.19E+13	1.36E+13	1.97E+13	1.51E+13	1.88E+13	2.05E+13	2.36E+13	2.64E+13

Year	1976	1977	1978	1979	1980	1981	1982	1983	1984	1985	1986	1987
$MW_{th}Hr$	434400	393600	396000	384000	391200	328800	290400	302400	326400	364800	350400	400800
Modeled Irradiation Time (s)	2.50E+07	2.27E+07	2.28E+07	2.21E+07	2.25E+07	1.89E+07	1.67E+07	1.74E+07	1.88E+07	2.10E+07	2.02E+07	2.31E+07
~Decay time (s)	5.68E+08	5.36E+08	5.05E+08	4.73E+08	4.42E+08	4.10E+08	3.79E+08	3.47E+08	3.16E+08	2.84E+08	2.52E+08	2.21E+08
# Ni-63 atoms/g 304 SS (atoms) at year end	3.69E+13	3.34E+13	3.37E+13	3.26E+13	3.32E+13	2.80E+13	2.47E+13	2.57E+13	2.78E+13	3.10E+13	2.98E+13	3.41E+13
# Ni-63 atoms/g 304 SS (atoms), due to this year irradiation, in 1994	3.26E+13	2.97E+13	3.01E+13	2.94E+13	3.02E+13	2.55E+13	2.27E+13	2.38E+13	2.59E+13	2.91E+13	2.82E+13	3.24E+13

Year	1988	1989	1990	1991	1992	1993	1994
$MW_{th}Hr$	429600	196800	561600	132000	295200	213600	182400
Modeled Irradiation Time (s)	2.47E+07	1.13E+07	3.23E+07	7.60E+06	1.70E+07	1.23E+07	1.05E+07
~Decay time (s)	1.89E+08	1.58E+08	1.26E+08	9.47E+07	6.31E+07	3.16E+07	0.00E+00
# Ni-63 atoms/g 304 SS (atoms) at year end	3.65E+13	1.67E+13	4.77E+13	1.12E+13	2.51E+13	1.82E+13	1.55E+13
# Ni-63 atoms/g 304 SS (atoms), due to this year irradiation, in 1994	3.50E+13	1.62E+13	4.64E+13	1.10E+13	2.48E+13	1.80E+13	1.55E+13

Total Ni-63 atoms @ End of irradiation (atoms)	6.82E+14
1994 Ni-63 Specific Activity (Ci/g 304 SS)	4.05E-06
2009 Ni-63 Specific Activity (Ci/g 304 SS)	3.65E-06

Upper Neutron Shield, 1st Row Can	
~φ (n/cm^2-s)	2.50E+09
λ_{2T} (s^{-1})	2.19E-10

Year	1964	1965	1966	1967	1968	1969	1970	1971	1972	1973	1974	1975
$MW_{th}Hr$	16800	104160	172800	79200	168000	189600	273600	208800	256800	278400	319200	354240
Modeled Irradiation Time (s)	9.68E+05	6.00E+06	9.95E+06	4.56E+06	9.68E+06	1.09E+07	1.58E+07	1.20E+07	1.48E+07	1.60E+07	1.84E+07	2.04E+07
~Decay time (s)	9.47E+08	9.15E+08	8.84E+08	8.52E+08	8.20E+08	7.89E+08	7.57E+08	7.26E+08	6.94E+08	6.63E+08	6.31E+08	6.00E+08
# Ni-63 atoms/g 304 SS (atoms) at year end	1.19E+12	7.39E+12	1.23E+13	5.62E+12	1.19E+13	1.34E+13	1.94E+13	1.48E+13	1.82E+13	1.97E+13	2.26E+13	2.51E+13
# Ni-63 atoms/g 304 SS (atoms), due to this year irradiation, in 1994	9.69E+11	6.05E+12	1.01E+13	4.66E+12	9.95E+12	1.13E+13	1.64E+13	1.26E+13	1.56E+13	1.71E+13	1.97E+13	2.20E+13

Year	1976	1977	1978	1979	1980	1981	1982	1983	1984	1985	1986	1987
$MW_{th}Hr$	434400	393600	396000	384000	391200	328800	290400	302400	326400	364800	350400	400800
Modeled Irradiation Time (s)	2.50E+07	2.27E+07	2.28E+07	2.21E+07	2.25E+07	1.89E+07	1.67E+07	1.74E+07	1.88E+07	2.10E+07	2.02E+07	2.31E+07
~Decay time (s)	5.68E+08	5.36E+08	5.05E+08	4.73E+08	4.42E+08	4.10E+08	3.79E+08	3.47E+08	3.16E+08	2.84E+08	2.52E+08	2.21E+08
# Ni-63 atoms/g 304 SS (atoms) at year end	3.08E+13	2.79E+13	2.80E+13	2.72E+13	2.77E+13	2.33E+13	2.06E+13	2.14E+13	2.31E+13	2.58E+13	2.48E+13	2.84E+13
# Ni-63 atoms/g 304 SS (atoms), due to this year irradiation, in 1994	2.72E+13	2.48E+13	2.51E+13	2.45E+13	2.51E+13	2.13E+13	1.89E+13	1.99E+13	2.16E+13	2.43E+13	2.35E+13	2.70E+13

Year	1988	1989	1990	1991	1992	1993	1994
$MW_{th}Hr$	429600	196800	561600	132000	295200	213600	182400
Modeled Irradiation Time (s)	2.47E+07	1.13E+07	3.23E+07	7.60E+06	1.70E+07	1.23E+07	1.05E+07
~Decay time (s)	1.89E+08	1.58E+08	1.26E+08	9.47E+07	6.31E+07	3.16E+07	0.00E+00
# Ni-63 atoms/g 304 SS (atoms) at year end	3.04E+13	1.40E+13	3.97E+13	9.36E+12	2.09E+13	1.51E+13	1.29E+13
# Ni-63 atoms/g 304 SS (atoms), due to this year irradiation, in 1994	2.92E+13	1.35E+13	3.86E+13	9.17E+12	2.06E+13	1.50E+13	1.29E+13

Total Ni-63 atoms @ End of irradiation (atoms)	5.69E+14
1994 Ni-63 Specific Activity (Ci/g 304 SS)	3.37E-06
2009 Ni-63 Specific Activity (Ci/g 304 SS)	3.04E-06

Neutron Shield, 2nd Row Can	
~φ (n/cm^2-s)	1.00E+09
λ_{2T} (s^{-1})	2.19E-10

Year	1964	1965	1966	1967	1968	1969	1970	1971	1972	1973	1974	1975
$MW_{th}Hr$	16800	104160	172800	79200	168000	189600	273600	208800	256800	278400	319200	354240
Modeled Irradiation Time (s)	9.68E+05	6.00E+06	9.95E+06	4.56E+06	9.68E+06	1.09E+07	1.58E+07	1.20E+07	1.48E+07	1.60E+07	1.84E+07	2.04E+07
~Decay time (s)	9.47E+08	9.15E+08	8.84E+08	8.52E+08	8.20E+08	7.89E+08	7.57E+08	7.26E+08	6.94E+08	6.63E+08	6.31E+08	6.00E+08
# Ni-63 atoms/g 304 SS (atoms) at year end	4.77E+11	2.96E+12	4.90E+12	2.25E+12	4.77E+12	5.38E+12	7.76E+12	5.92E+12	7.28E+12	7.89E+12	9.05E+12	1.00E+13
# Ni-63 atoms/g 304 SS (atoms), due to this year irradiation, in 1994	3.88E+11	2.42E+12	4.04E+12	1.86E+12	3.98E+12	4.52E+12	6.57E+12	5.05E+12	6.25E+12	6.82E+12	7.88E+12	8.80E+12

Year	1976	1977	1978	1979	1980	1981	1982	1983	1984	1985	1986	1987
$MW_{th}Hr$	434400	393600	396000	384000	391200	328800	290400	302400	326400	364800	350400	400800
Modeled Irradiation Time (s)	2.50E+07	2.27E+07	2.28E+07	2.21E+07	2.25E+07	1.89E+07	1.67E+07	1.74E+07	1.88E+07	2.10E+07	2.02E+07	2.31E+07
~Decay time (s)	5.68E+08	5.36E+08	5.05E+08	4.73E+08	4.42E+08	4.10E+08	3.79E+08	3.47E+08	3.16E+08	2.84E+08	2.52E+08	2.21E+08
# Ni-63 atoms/g 304 SS (atoms) at year end	1.23E+13	1.11E+13	1.12E+13	1.09E+13	1.11E+13	9.32E+12	8.23E+12	8.57E+12	9.25E+12	1.03E+13	9.93E+12	1.14E+13
# Ni-63 atoms/g 304 SS (atoms), due to this year irradiation, in 1994	1.09E+13	9.91E+12	1.00E+13	9.81E+12	1.01E+13	8.52E+12	7.58E+12	7.94E+12	8.63E+12	9.71E+12	9.39E+12	1.08E+13

Year	1988	1989	1990	1991	1992	1993	1994
$MW_{th}Hr$	429600	196800	561600	132000	295200	213600	182400
Modeled Irradiation Time (s)	2.47E+07	1.13E+07	3.23E+07	7.60E+06	1.70E+07	1.23E+07	1.05E+07
~Decay time (s)	1.89E+08	1.58E+08	1.26E+08	9.47E+07	6.31E+07	3.16E+07	0.00E+00
# Ni-63 atoms/g 304 SS (atoms) at year end	1.22E+13	5.58E+12	1.59E+13	3.75E+12	8.37E+12	6.06E+12	5.17E+12
# Ni-63 atoms/g 304 SS (atoms), due to this year irradiation, in 1994	1.17E+13	5.39E+12	1.55E+13	3.67E+12	8.25E+12	6.02E+12	5.17E+12

Total Ni-63 atoms @ End of irradiation (atoms)	2.27E+14
1994 Ni-63 Specific Activity (Ci/g 304 SS)	1.35E-06
2009 Ni-63 Specific Activity (Ci/g 304 SS)	1.22E-06

Neutron Shield, 3rd Row Can	
~φ (n/cm^2-s)	2.50E+08
λ_{2T} (s^{-1})	2.19E-10

Year	1964	1965	1966	1967	1968	1969	1970	1971	1972	1973	1974	1975
$MW_{th}Hr$	16800	104160	172800	79200	168000	189600	273600	208800	256800	278400	319200	354240
Modeled Irradiation Time (s)	9.68E+05	6.00E+06	9.95E+06	4.56E+06	9.68E+06	1.09E+07	1.58E+07	1.20E+07	1.48E+07	1.60E+07	1.84E+07	2.04E+07
~Decay time (s)	9.47E+08	9.15E+08	8.84E+08	8.52E+08	8.20E+08	7.89E+08	7.57E+08	7.26E+08	6.94E+08	6.63E+08	6.31E+08	6.00E+08
# Ni-63 atoms/g 304 SS (atoms) at year end	1.19E+11	7.39E+11	1.23E+12	5.62E+11	1.19E+12	1.34E+12	1.94E+12	1.48E+12	1.82E+12	1.97E+12	2.26E+12	2.51E+12
# Ni-63 atoms/g 304 SS (atoms), due to this year irradiation, in 1994	9.69E+10	6.05E+11	1.01E+12	4.66E+11	9.95E+11	1.13E+12	1.64E+12	1.26E+12	1.56E+12	1.71E+12	1.97E+12	2.20E+12

Year	1976	1977	1978	1979	1980	1981	1982	1983	1984	1985	1986	1987
$MW_{th}Hr$	434400	393600	396000	384000	391200	328800	290400	302400	326400	364800	350400	400800
Modeled Irradiation Time (s)	2.50E+07	2.27E+07	2.28E+07	2.21E+07	2.25E+07	1.89E+07	1.67E+07	1.74E+07	1.88E+07	2.10E+07	2.02E+07	2.31E+07
~Decay time (s)	5.68E+08	5.36E+08	5.05E+08	4.73E+08	4.42E+08	4.10E+08	3.79E+08	3.47E+08	3.16E+08	2.84E+08	2.52E+08	2.21E+08
# Ni-63 atoms/g 304 SS (atoms) at year end	3.08E+12	2.79E+12	2.80E+12	2.72E+12	2.77E+12	2.33E+12	2.06E+12	2.14E+12	2.31E+12	2.58E+12	2.48E+12	2.84E+12
# Ni-63 atoms/g 304 SS (atoms), due to this year irradiation, in 1994	2.72E+12	2.48E+12	2.51E+12	2.45E+12	2.51E+12	2.13E+12	1.89E+12	1.99E+12	2.16E+12	2.43E+12	2.35E+12	2.70E+12

Year	1988	1989	1990	1991	1992	1993	1994
$MW_{th}Hr$	429600	196800	561600	132000	295200	213600	182400
Modeled Irradiation Time (s)	2.47E+07	1.13E+07	3.23E+07	7.60E+06	1.70E+07	1.23E+07	1.05E+07
~Decay time (s)	1.89E+08	1.58E+08	1.26E+08	9.47E+07	6.31E+07	3.16E+07	0.00E+00
# Ni-63 atoms/g 304 SS (atoms) at year end	3.04E+12	1.40E+12	3.97E+12	9.36E+11	2.09E+12	1.51E+12	1.29E+12
# Ni-63 atoms/g 304 SS (atoms), due to this year irradiation, in 1994	2.92E+12	1.35E+12	3.86E+12	9.17E+11	2.06E+12	1.50E+12	1.29E+12

Total Ni-63 atoms @ End of irradiation (atoms)	5.69E+13
1994 Ni-63 Specific Activity (Ci/g 304 SS)	3.37E-07
2009 Ni-63 Specific Activity (Ci/g 304 SS)	3.04E-07

Neutron Shield, 4th Row Can	
~φ (n/cm^2-s)	8.00E+07
λ_{2T} (s^{-1})	2.19E-10

Year	1964	1965	1966	1967	1968	1969	1970	1971	1972	1973	1974	1975
$MW_{th}Hr$	16800	104160	172800	79200	168000	189600	273600	208800	256800	278400	319200	354240
Modeled Irradiation Time (s)	9.68E+05	6.00E+06	9.95E+06	4.56E+06	9.68E+06	1.09E+07	1.58E+07	1.20E+07	1.48E+07	1.60E+07	1.84E+07	2.04E+07
~Decay time (s)	9.47E+08	9.15E+08	8.84E+08	8.52E+08	8.20E+08	7.89E+08	7.57E+08	7.26E+08	6.94E+08	6.63E+08	6.31E+08	6.00E+08
# Ni-63 atoms/g 304 SS (atoms) at year end	3.82E+10	2.36E+11	3.92E+11	1.80E+11	3.81E+11	4.30E+11	6.21E+11	4.74E+11	5.82E+11	6.31E+11	7.24E+11	8.03E+11
# Ni-63 atoms/g 304 SS (atoms), due to this year irradiation, in 1994	3.10E+10	1.93E+11	3.23E+11	1.49E+11	3.18E+11	3.62E+11	5.26E+11	4.04E+11	5.00E+11	5.46E+11	6.30E+11	7.04E+11

Year	1976	1977	1978	1979	1980	1981	1982	1983	1984	1985	1986	1987
$MW_{th}Hr$	434400	393600	396000	384000	391200	328800	290400	302400	326400	364800	350400	400800
Modeled Irradiation Time (s)	2.50E+07	2.27E+07	2.28E+07	2.21E+07	2.25E+07	1.89E+07	1.67E+07	1.74E+07	1.88E+07	2.10E+07	2.02E+07	2.31E+07
~Decay time (s)	5.68E+08	5.36E+08	5.05E+08	4.73E+08	4.42E+08	4.10E+08	3.79E+08	3.47E+08	3.16E+08	2.84E+08	2.52E+08	2.21E+08
# Ni-63 atoms/g 304 SS (atoms) at year end	9.84E+11	8.92E+11	8.97E+11	8.70E+11	8.87E+11	7.45E+11	6.59E+11	6.86E+11	7.40E+11	8.27E+11	7.94E+11	9.08E+11
# Ni-63 atoms/g 304 SS (atoms), due to this year irradiation, in 1994	8.69E+11	7.93E+11	8.03E+11	7.84E+11	8.05E+11	6.81E+11	6.06E+11	6.35E+11	6.91E+11	7.77E+11	7.52E+11	8.65E+11

Year	1988	1989	1990	1991	1992	1993	1994
$MW_{th}Hr$	429600	196800	561600	132000	295200	213600	182400
Modeled Irradiation Time (s)	2.47E+07	1.13E+07	3.23E+07	7.60E+06	1.70E+07	1.23E+07	1.05E+07
~Decay time (s)	1.89E+08	1.58E+08	1.26E+08	9.47E+07	6.31E+07	3.16E+07	0.00E+00
# Ni-63 atoms/g 304 SS (atoms) at year end	9.73E+11	4.47E+11	1.27E+12	3.00E+11	6.69E+11	4.85E+11	4.14E+11
# Ni-63 atoms/g 304 SS (atoms), due to this year irradiation, in 1994	9.34E+11	4.31E+11	1.24E+12	2.93E+11	6.60E+11	4.81E+11	4.14E+11

Total Ni-63 atoms @ End of irradiation (atoms)	1.82E+13
1994 Ni-63 Specific Activity (Ci/g 304 SS)	1.08E-07
2009 Ni-63 Specific Activity (Ci/g 304 SS)	9.73E-08

Neutron Shield, 5th Row Can	
~φ (n/cm^2-s)	1.50E+07
λ_{2T} (s^{-1})	2.19E-10

Year	1964	1965	1966	1967	1968	1969	1970	1971	1972	1973	1974	1975
$MW_{th}Hr$	16800	104160	172800	79200	168000	189600	273600	208800	256800	278400	319200	354240
Modeled Irradiation Time (s)	9.68E+05	6.00E+06	9.95E+06	4.56E+06	9.68E+06	1.09E+07	1.58E+07	1.20E+07	1.48E+07	1.60E+07	1.84E+07	2.04E+07
~Decay time (s)	9.47E+08	9.15E+08	8.84E+08	8.52E+08	8.20E+08	7.89E+08	7.57E+08	7.26E+08	6.94E+08	6.63E+08	6.31E+08	6.00E+08
# Ni-63 atoms/g 304 SS (atoms) at year end	7.16E+09	4.43E+10	7.35E+10	3.37E+10	7.15E+10	8.07E+10	1.16E+11	8.88E+10	1.09E+11	1.18E+11	1.36E+11	1.51E+11
# Ni-63 atoms/g 304 SS (atoms), due to this year irradiation, in 1994	5.81E+09	3.63E+10	6.06E+10	2.80E+10	5.97E+10	6.78E+10	9.85E+10	7.57E+10	9.38E+10	1.02E+11	1.18E+11	1.32E+11

Year	1976	1977	1978	1979	1980	1981	1982	1983	1984	1985	1986	1987
$MW_{th}Hr$	434400	393600	396000	384000	391200	328800	290400	302400	326400	364800	350400	400800
Modeled Irradiation Time (s)	2.50E+07	2.27E+07	2.28E+07	2.21E+07	2.25E+07	1.89E+07	1.67E+07	1.74E+07	1.88E+07	2.10E+07	2.02E+07	2.31E+07
~Decay time (s)	5.68E+08	5.36E+08	5.05E+08	4.73E+08	4.42E+08	4.10E+08	3.79E+08	3.47E+08	3.16E+08	2.84E+08	2.52E+08	2.21E+08
# Ni-63 atoms/g 304 SS (atoms) at year end	1.85E+11	1.67E+11	1.68E+11	1.63E+11	1.66E+11	1.40E+11	1.23E+11	1.29E+11	1.39E+11	1.55E+11	1.49E+11	1.70E+11
# Ni-63 atoms/g 304 SS (atoms), due to this year irradiation, in 1994	1.63E+11	1.49E+11	1.51E+11	1.47E+11	1.51E+11	1.28E+11	1.14E+11	1.19E+11	1.29E+11	1.46E+11	1.41E+11	1.62E+11

Year	1988	1989	1990	1991	1992	1993	1994
$MW_{th}Hr$	429600	196800	561600	132000	295200	213600	182400
Modeled Irradiation Time (s)	2.47E+07	1.13E+07	3.23E+07	7.60E+06	1.70E+07	1.23E+07	1.05E+07
~Decay time (s)	1.89E+08	1.58E+08	1.26E+08	9.47E+07	6.31E+07	3.16E+07	0.00E+00
# Ni-63 atoms/g 304 SS (atoms) at year end	1.83E+11	8.37E+10	2.38E+11	5.62E+10	1.26E+11	9.09E+10	7.76E+10
# Ni-63 atoms/g 304 SS (atoms), due to this year irradiation, in 1994	1.75E+11	8.09E+10	2.32E+11	5.50E+10	1.24E+11	9.02E+10	7.76E+10

Total Ni-63 atoms @ End of irradiation (atoms)	3.41E+12
1994 Ni-63 Specific Activity (Ci/g 304 SS)	2.02E-08
2009 Ni-63 Specific Activity (Ci/g 304 SS)	1.82E-08

Neutron Shield, 6th Row Can	
~φ (n/cm^2-s)	4.00E+06
λ_{2T} (s^{-1})	2.19E-10

Year	1964	1965	1966	1967	1968	1969	1970	1971	1972	1973	1974	1975
$MW_{th}Hr$	16800	104160	172800	79200	168000	189600	273600	208800	256800	278400	319200	354240
Modeled Irradiation Time (s)	9.68E+05	6.00E+06	9.95E+06	4.56E+06	9.68E+06	1.09E+07	1.58E+07	1.20E+07	1.48E+07	1.60E+07	1.84E+07	2.04E+07
~Decay time (s)	9.47E+08	9.15E+08	8.84E+08	8.52E+08	8.20E+08	7.89E+08	7.57E+08	7.26E+08	6.94E+08	6.63E+08	6.31E+08	6.00E+08
# Ni-63 atoms/g 304 SS (atoms) at year end	1.91E+09	1.18E+10	1.96E+10	8.99E+09	1.91E+10	2.15E+10	3.10E+10	2.37E+10	2.91E+10	3.16E+10	3.62E+10	4.01E+10
# Ni-63 atoms/g 304 SS (atoms), due to this year irradiation, in 1994	1.55E+09	9.67E+09	1.62E+10	7.46E+09	1.59E+10	1.81E+10	2.63E+10	2.02E+10	2.50E+10	2.73E+10	3.15E+10	3.52E+10

Year	1976	1977	1978	1979	1980	1981	1982	1983	1984	1985	1986	1987
$MW_{th}Hr$	434400	393600	396000	384000	391200	328800	290400	302400	326400	364800	350400	400800
Modeled Irradiation Time (s)	2.50E+07	2.27E+07	2.28E+07	2.21E+07	2.25E+07	1.89E+07	1.67E+07	1.74E+07	1.88E+07	2.10E+07	2.02E+07	2.31E+07
~Decay time (s)	5.68E+08	5.36E+08	5.05E+08	4.73E+08	4.42E+08	4.10E+08	3.79E+08	3.47E+08	3.16E+08	2.84E+08	2.52E+08	2.21E+08
# Ni-63 atoms/g 304 SS (atoms) at year end	4.92E+10	4.46E+10	4.49E+10	4.35E+10	4.43E+10	3.73E+10	3.29E+10	3.43E+10	3.70E+10	4.13E+10	3.97E+10	4.54E+10
# Ni-63 atoms/g 304 SS (atoms), due to this year irradiation, in 1994	4.34E+10	3.96E+10	4.02E+10	3.92E+10	4.02E+10	3.41E+10	3.03E+10	3.18E+10	3.45E+10	3.88E+10	3.76E+10	4.33E+10

Year	1988	1989	1990	1991	1992	1993	1994
$MW_{th}Hr$	429600	196800	561600	132000	295200	213600	182400
Modeled Irradiation Time (s)	2.47E+07	1.13E+07	3.23E+07	7.60E+06	1.70E+07	1.23E+07	1.05E+07
~Decay time (s)	1.89E+08	1.58E+08	1.26E+08	9.47E+07	6.31E+07	3.16E+07	0.00E+00
# Ni-63 atoms/g 304 SS (atoms) at year end	4.87E+10	2.23E+10	6.36E+10	1.50E+10	3.35E+10	2.42E+10	2.07E+10
# Ni-63 atoms/g 304 SS (atoms), due to this year irradiation, in 1994	4.67E+10	2.16E+10	6.18E+10	1.47E+10	3.30E+10	2.41E+10	2.07E+10

Total Ni-63 atoms @ End of irradiation (atoms)	9.10E+11
1994 Ni-63 Specific Activity (Ci/g 304 SS)	5.40E-09
2009 Ni-63 Specific Activity (Ci/g 304 SS)	4.86E-09

Closure Head Body	
~φ (n/cm^2-s)	1.00E+08
λ_{2T} (s^{-1})	2.19E-10

Year	1964	1965	1966	1967	1968	1969	1970	1971	1972	1973	1974	1975
$MW_{th}Hr$	16800	104160	172800	79200	168000	189600	273600	208800	256800	278400	319200	354240
Modeled Irradiation Time (s)	9.68E+05	6.00E+06	9.95E+06	4.56E+06	9.68E+06	1.09E+07	1.58E+07	1.20E+07	1.48E+07	1.60E+07	1.84E+07	2.04E+07
~Decay time (s)	9.47E+08	9.15E+08	8.84E+08	8.52E+08	8.20E+08	7.89E+08	7.57E+08	7.26E+08	6.94E+08	6.63E+08	6.31E+08	6.00E+08
# Ni-63 atoms/g 304 SS (atoms) at year end	4.77E+10	2.96E+11	4.90E+11	2.25E+11	4.77E+11	5.38E+11	7.76E+11	5.92E+11	7.28E+11	7.89E+11	9.05E+11	1.00E+12
# Ni-63 atoms/g 304 SS (atoms), due to this year irradiation, in 1994	3.88E+10	2.42E+11	4.04E+11	1.86E+11	3.98E+11	4.52E+11	6.57E+11	5.05E+11	6.25E+11	6.82E+11	7.88E+11	8.80E+11

Year	1976	1977	1978	1979	1980	1981	1982	1983	1984	1985	1986	1987
$MW_{th}Hr$	434400	393600	396000	384000	391200	328800	290400	302400	326400	364800	350400	400800
Modeled Irradiation Time (s)	2.50E+07	2.27E+07	2.28E+07	2.21E+07	2.25E+07	1.89E+07	1.67E+07	1.74E+07	1.88E+07	2.10E+07	2.02E+07	2.31E+07
~Decay time (s)	5.68E+08	5.36E+08	5.05E+08	4.73E+08	4.42E+08	4.10E+08	3.79E+08	3.47E+08	3.16E+08	2.84E+08	2.52E+08	2.21E+08
# Ni-63 atoms/g 304 SS (atoms) at year end	1.23E+12	1.11E+12	1.12E+12	1.09E+12	1.11E+12	9.32E+11	8.23E+11	8.57E+11	9.25E+11	1.03E+12	9.93E+11	1.14E+12
# Ni-63 atoms/g 304 SS (atoms), due to this year irradiation, in 1994	1.09E+12	9.91E+11	1.00E+12	9.81E+11	1.01E+12	8.52E+11	7.58E+11	7.94E+11	8.63E+11	9.71E+11	9.39E+11	1.08E+12

Year	1988	1989	1990	1991	1992	1993	1994
$MW_{th}Hr$	429600	196800	561600	132000	295200	213600	182400
Modeled Irradiation Time (s)	2.47E+07	1.13E+07	3.23E+07	7.60E+06	1.70E+07	1.23E+07	1.05E+07
~Decay time (s)	1.89E+08	1.58E+08	1.26E+08	9.47E+07	6.31E+07	3.16E+07	0.00E+00
# Ni-63 atoms/g 304 SS (atoms) at year end	1.22E+12	5.58E+11	1.59E+12	3.75E+11	8.37E+11	6.06E+11	5.17E+11
# Ni-63 atoms/g 304 SS (atoms), due to this year irradiation, in 1994	1.17E+12	5.39E+11	1.55E+12	3.67E+11	8.25E+11	6.02E+11	5.17E+11

Total Ni-63 atoms @ End of irradiation (atoms)	2.27E+13
1994 Ni-63 Specific Activity (Ci/g 304 SS)	1.35E-07
2009 Ni-63 Specific Activity (Ci/g 304 SS)	1.22E-07

Closure Head Top	
~φ (n/cm^2-s)	9.00E+05
λ_{2T} (s^{-1})	2.19E-10

Year	1964	1965	1966	1967	1968	1969	1970	1971	1972	1973	1974	1975
$MW_{th}Hr$	16800	104160	172800	79200	168000	189600	273600	208800	256800	278400	319200	354240
Modeled Irradiation Time (s)	9.68E+05	6.00E+06	9.95E+06	4.56E+06	9.68E+06	1.09E+07	1.58E+07	1.20E+07	1.48E+07	1.60E+07	1.84E+07	2.04E+07
~Decay time (s)	9.47E+08	9.15E+08	8.84E+08	8.52E+08	8.20E+08	7.89E+08	7.57E+08	7.26E+08	6.94E+08	6.63E+08	6.31E+08	6.00E+08
# Ni-63 atoms/g 304 SS (atoms) at year end	4.29E+08	2.66E+09	4.41E+09	2.02E+09	4.29E+09	4.84E+09	6.98E+09	5.33E+09	6.55E+09	7.10E+09	8.14E+09	9.03E+09
# Ni-63 atoms/g 304 SS (atoms), due to this year irradiation, in 1994	3.49E+08	2.18E+09	3.63E+09	1.68E+09	3.58E+09	4.07E+09	5.91E+09	4.54E+09	5.63E+09	6.14E+09	7.09E+09	7.92E+09

Year	1976	1977	1978	1979	1980	1981	1982	1983	1984	1985	1986	1987
$MW_{th}Hr$	434400	393600	396000	384000	391200	328800	290400	302400	326400	364800	350400	400800
Modeled Irradiation Time (s)	2.50E+07	2.27E+07	2.28E+07	2.21E+07	2.25E+07	1.89E+07	1.67E+07	1.74E+07	1.88E+07	2.10E+07	2.02E+07	2.31E+07
~Decay time (s)	5.68E+08	5.36E+08	5.05E+08	4.73E+08	4.42E+08	4.10E+08	3.79E+08	3.47E+08	3.16E+08	2.84E+08	2.52E+08	2.21E+08
# Ni-63 atoms/g 304 SS (atoms) at year end	1.11E+10	1.00E+10	1.01E+10	9.79E+09	9.97E+09	8.39E+09	7.41E+09	7.71E+09	8.33E+09	9.30E+09	8.94E+09	1.02E+10
# Ni-63 atoms/g 304 SS (atoms), due to this year irradiation, in 1994	9.77E+09	8.92E+09	9.04E+09	8.82E+09	9.05E+09	7.66E+09	6.82E+09	7.15E+09	7.77E+09	8.74E+09	8.45E+09	9.73E+09

Year	1988	1989	1990	1991	1992	1993	1994
$MW_{th}Hr$	429600	196800	561600	132000	295200	213600	182400
Modeled Irradiation Time (s)	2.47E+07	1.13E+07	3.23E+07	7.60E+06	1.70E+07	1.23E+07	1.05E+07
~Decay time (s)	1.89E+08	1.58E+08	1.26E+08	9.47E+07	6.31E+07	3.16E+07	0.00E+00
# Ni-63 atoms/g 304 SS (atoms) at year end	1.10E+10	5.02E+09	1.43E+10	3.37E+09	7.53E+09	5.45E+09	4.66E+09
# Ni-63 atoms/g 304 SS (atoms), due to this year irradiation, in 1994	1.05E+10	4.85E+09	1.39E+10	3.30E+09	7.43E+09	5.41E+09	4.66E+09

Total Ni-63 atoms @ End of irradiation (atoms)	2.05E+11
1994 Ni-63 Specific Activity (Ci/g 304 SS)	1.21E-09
2009 Ni-63 Specific Activity (Ci/g 304 SS)	1.09E-09

Upper Grid Plate	
~φ (n/cm^2-s)	2.00E+10
λ_{2T} (s^{-1})	2.20E-10

Year	1964	1965	1966	1967	1968	1969	1970	1971	1972	1973	1974	1975
$MW_{th}Hr$	16800	104160	172800	79200	168000	189600	273600	208800	256800	278400	319200	354240
Modeled Irradiation Time (s)	9.68E+05	6.00E+06	9.95E+06	4.56E+06	9.68E+06	1.09E+07	1.58E+07	1.20E+07	1.48E+07	1.60E+07	1.84E+07	2.04E+07
~Decay time (s)	9.47E+08	9.15E+08	8.84E+08	8.52E+08	8.20E+08	7.89E+08	7.57E+08	7.26E+08	6.94E+08	6.63E+08	6.31E+08	6.00E+08
# Ni-63 atoms/g 304 SS (atoms) at year end	9.54E+12	5.91E+13	9.80E+13	4.50E+13	9.53E+13	1.08E+14	1.55E+14	1.18E+14	1.46E+14	1.58E+14	1.81E+14	2.01E+14
# Ni-63 atoms/g 304 SS (atoms), due to this year irradiation, in 1994	7.75E+12	4.84E+13	8.08E+13	3.73E+13	7.96E+13	9.05E+13	1.31E+14	1.01E+14	1.25E+14	1.36E+14	1.58E+14	1.76E+14

Year	1976	1977	1978	1979	1980	1981	1982	1983	1984	1985	1986	1987
$MW_{th}Hr$	434400	393600	396000	384000	391200	328800	290400	302400	326400	364800	350400	400800
Modeled Irradiation Time (s)	2.50E+07	2.27E+07	2.28E+07	2.21E+07	2.25E+07	1.89E+07	1.67E+07	1.74E+07	1.88E+07	2.10E+07	2.02E+07	2.31E+07
~Decay time (s)	5.68E+08	5.36E+08	5.05E+08	4.73E+08	4.42E+08	4.10E+08	3.79E+08	3.47E+08	3.16E+08	2.84E+08	2.52E+08	2.21E+08
# Ni-63 atoms/g 304 SS (atoms) at year end	2.46E+14	2.23E+14	2.24E+14	2.18E+14	2.22E+14	1.86E+14	1.65E+14	1.71E+14	1.85E+14	2.07E+14	1.99E+14	2.27E+14
# Ni-63 atoms/g 304 SS (atoms), due to this year irradiation, in 1994	2.17E+14	1.98E+14	2.01E+14	1.96E+14	2.01E+14	1.70E+14	1.52E+14	1.59E+14	1.73E+14	1.94E+14	1.88E+14	2.16E+14

Year	1988	1989	1990	1991	1992	1993	1994
$MW_{th}Hr$	429600	196800	561600	132000	295200	213600	182400
Modeled Irradiation Time (s)	2.47E+07	1.13E+07	3.23E+07	7.60E+06	1.70E+07	1.23E+07	1.05E+07
~Decay time (s)	1.89E+08	1.58E+08	1.26E+08	9.47E+07	6.31E+07	3.16E+07	0.00E+00
# Ni-63 atoms/g 304 SS (atoms) at year end	2.43E+14	1.12E+14	3.18E+14	7.49E+13	1.67E+14	1.21E+14	1.03E+14
# Ni-63 atoms/g 304 SS (atoms), due to this year irradiation, in 1994	2.33E+14	1.08E+14	3.09E+14	7.34E+13	1.65E+14	1.20E+14	1.03E+14

Total Ni-63 atoms @ End of irradiation (atoms)	4.55E+15
1994 Ni-63 Specific Activity (Ci/g 304 SS)	2.70E-05
2009 Ni-63 Specific Activity (Ci/g 304 SS)	2.43E-05

Inner Connecting Tubes/High Pressure Coolant Baffle/Safety Rod Adapters	
~φ (n/cm^2-s)	2.90E+10
λ_{2T} (s^{-1})	2.20E-10

Year	1964	1965	1966	1967	1968	1969	1970	1971	1972	1973	1974	1975
$MW_{th}Hr$	16800	104160	172800	79200	168000	189600	273600	208800	256800	278400	319200	354240
Modeled Irradiation Time (s)	9.68E+05	6.00E+06	9.95E+06	4.56E+06	9.68E+06	1.09E+07	1.58E+07	1.20E+07	1.48E+07	1.60E+07	1.84E+07	2.04E+07
~Decay time (s)	9.47E+08	9.15E+08	8.84E+08	8.52E+08	8.20E+08	7.89E+08	7.57E+08	7.26E+08	6.94E+08	6.63E+08	6.31E+08	6.00E+08
# Ni-63 atoms/g 304 SS (atoms) at year end	1.38E+13	8.57E+13	1.42E+14	6.52E+13	1.38E+14	1.56E+14	2.25E+14	1.72E+14	2.11E+14	2.29E+14	2.62E+14	2.91E+14
# Ni-63 atoms/g 304 SS (atoms), due to this year irradiation, in 1994	1.12E+13	7.01E+13	1.17E+14	5.41E+13	1.15E+14	1.31E+14	1.90E+14	1.46E+14	1.81E+14	1.98E+14	2.28E+14	2.55E+14

Year	1976	1977	1978	1979	1980	1981	1982	1983	1984	1985	1986	1987
$MW_{th}Hr$	434400	393600	396000	384000	391200	328800	290400	302400	326400	364800	350400	400800
Modeled Irradiation Time (s)	2.50E+07	2.27E+07	2.28E+07	2.21E+07	2.25E+07	1.89E+07	1.67E+07	1.74E+07	1.88E+07	2.10E+07	2.02E+07	2.31E+07
~Decay time (s)	5.68E+08	5.36E+08	5.05E+08	4.73E+08	4.42E+08	4.10E+08	3.79E+08	3.47E+08	3.16E+08	2.84E+08	2.52E+08	2.21E+08
# Ni-63 atoms/g 304 SS (atoms) at year end	3.57E+14	3.23E+14	3.25E+14	3.15E+14	3.21E+14	2.70E+14	2.39E+14	2.49E+14	2.68E+14	3.00E+14	2.88E+14	3.29E+14
# Ni-63 atoms/g 304 SS (atoms), due to this year irradiation, in 1994	3.15E+14	2.87E+14	2.91E+14	2.84E+14	2.92E+14	2.47E+14	2.20E+14	2.30E+14	2.50E+14	2.82E+14	2.72E+14	3.14E+14

Year	1988	1989	1990	1991	1992	1993	1994
$MW_{th}Hr$	429600	196800	561600	132000	295200	213600	182400
Modeled Irradiation Time (s)	2.47E+07	1.13E+07	3.23E+07	7.60E+06	1.70E+07	1.23E+07	1.05E+07
~Decay time (s)	1.89E+08	1.58E+08	1.26E+08	9.47E+07	6.31E+07	3.16E+07	0.00E+00
# Ni-63 atoms/g 304 SS (atoms) at year end	3.53E+14	1.62E+14	4.61E+14	1.09E+14	2.43E+14	1.76E+14	1.50E+14
# Ni-63 atoms/g 304 SS (atoms), due to this year irradiation, in 1994	3.38E+14	1.56E+14	4.48E+14	1.06E+14	2.39E+14	1.74E+14	1.50E+14

Total Ni-63 atoms @ End of irradiation (atoms)	6.60E+15
1994 Ni-63 Specific Activity (Ci/g 304 SS)	3.91E-05
2009 Ni-63 Specific Activity (Ci/g 304 SS)	3.53E-05

Lower Grid Plate/Outer Wall	
~φ (n/cm^2-s)	2.10E+10
λ_{2T} (s^{-1})	2.20E-10

Year	1964	1965	1966	1967	1968	1969	1970	1971	1972	1973	1974	1975
$MW_{th}Hr$	16800	104160	172800	79200	168000	189600	273600	208800	256800	278400	319200	354240
Modeled Irradiation Time (s)	9.68E+05	6.00E+06	9.95E+06	4.56E+06	9.68E+06	1.09E+07	1.58E+07	1.20E+07	1.48E+07	1.60E+07	1.84E+07	2.04E+07
~Decay time (s)	9.47E+08	9.15E+08	8.84E+08	8.52E+08	8.20E+08	7.89E+08	7.57E+08	7.26E+08	6.94E+08	6.63E+08	6.31E+08	6.00E+08
# Ni-63 atoms/g 304 SS (atoms) at year end	1.00E+13	6.21E+13	1.03E+14	4.72E+13	1.00E+14	1.13E+14	1.63E+14	1.24E+14	1.53E+14	1.66E+14	1.90E+14	2.11E+14
# Ni-63 atoms/g 304 SS (atoms), due to this year irradiation, in 1994	8.14E+12	5.08E+13	8.48E+13	3.92E+13	8.36E+13	9.50E+13	1.38E+14	1.06E+14	1.31E+14	1.43E+14	1.65E+14	1.85E+14

Year	1976	1977	1978	1979	1980	1981	1982	1983	1984	1985	1986	1987
$MW_{th}Hr$	434400	393600	396000	384000	391200	328800	290400	302400	326400	364800	350400	400800
Modeled Irradiation Time (s)	2.50E+07	2.27E+07	2.28E+07	2.21E+07	2.25E+07	1.89E+07	1.67E+07	1.74E+07	1.88E+07	2.10E+07	2.02E+07	2.31E+07
~Decay time (s)	5.68E+08	5.36E+08	5.05E+08	4.73E+08	4.42E+08	4.10E+08	3.79E+08	3.47E+08	3.16E+08	2.84E+08	2.52E+08	2.21E+08
# Ni-63 atoms/g 304 SS (atoms) at year end	2.58E+14	2.34E+14	2.36E+14	2.28E+14	2.33E+14	1.96E+14	1.73E+14	1.80E+14	1.94E+14	2.17E+14	2.09E+14	2.38E+14
# Ni-63 atoms/g 304 SS (atoms), due to this year irradiation, in 1994	2.28E+14	2.08E+14	2.11E+14	2.06E+14	2.11E+14	1.79E+14	1.59E+14	1.67E+14	1.81E+14	2.04E+14	1.97E+14	2.27E+14

Year	1988	1989	1990	1991	1992	1993	1994
$MW_{th}Hr$	429600	196800	561600	132000	295200	213600	182400
Modeled Irradiation Time (s)	2.47E+07	1.13E+07	3.23E+07	7.60E+06	1.70E+07	1.23E+07	1.05E+07
~Decay time (s)	1.89E+08	1.58E+08	1.26E+08	9.47E+07	6.31E+07	3.16E+07	0.00E+00
# Ni-63 atoms/g 304 SS (atoms) at year end	2.56E+14	1.17E+14	3.34E+14	7.87E+13	1.76E+14	1.27E+14	1.09E+14
# Ni-63 atoms/g 304 SS (atoms), due to this year irradiation, in 1994	2.45E+14	1.13E+14	3.25E+14	7.70E+13	1.73E+14	1.26E+14	1.09E+14

Total Ni-63 atoms @ End of irradiation (atoms)	4.78E+15
1994 Ni-63 Specific Activity (Ci/g 304 SS)	2.83E-05
2009 Ni-63 Specific Activity (Ci/g 304 SS)	2.55E-05

Low Pressure Baffle/Low Pressure Plenum Walls	
~φ (n/cm^2-s)	5.50E+09
λ_{2T} (s^{-1})	2.20E-10

Year	1964	1965	1966	1967	1968	1969	1970	1971	1972	1973	1974	1975
$MW_{th}Hr$	16800	104160	172800	79200	168000	189600	273600	208800	256800	278400	319200	354240
Modeled Irradiation Time (s)	9.68E+05	6.00E+06	9.95E+06	4.56E+06	9.68E+06	1.09E+07	1.58E+07	1.20E+07	1.48E+07	1.60E+07	1.84E+07	2.04E+07
~Decay time (s)	9.47E+08	9.15E+08	8.84E+08	8.52E+08	8.20E+08	7.89E+08	7.57E+08	7.26E+08	6.94E+08	6.63E+08	6.31E+08	6.00E+08
# Ni-63 atoms/g 304 SS (atoms) at year end	2.62E+12	1.63E+13	2.70E+13	1.24E+13	2.62E+13	2.96E+13	4.27E+13	3.26E+13	4.00E+13	4.34E+13	4.98E+13	5.52E+13
# Ni-63 atoms/g 304 SS (atoms), due to this year irradiation, in 1994	2.13E+12	1.33E+13	2.22E+13	1.03E+13	2.19E+13	2.49E+13	3.61E+13	2.78E+13	3.44E+13	3.75E+13	4.33E+13	4.84E+13

Year	1976	1977	1978	1979	1980	1981	1982	1983	1984	1985	1986	1987
$MW_{th}Hr$	434400	393600	396000	384000	391200	328800	290400	302400	326400	364800	350400	400800
Modeled Irradiation Time (s)	2.50E+07	2.27E+07	2.28E+07	2.21E+07	2.25E+07	1.89E+07	1.67E+07	1.74E+07	1.88E+07	2.10E+07	2.02E+07	2.31E+07
~Decay time (s)	5.68E+08	5.36E+08	5.05E+08	4.73E+08	4.42E+08	4.10E+08	3.79E+08	3.47E+08	3.16E+08	2.84E+08	2.52E+08	2.21E+08
# Ni-63 atoms/g 304 SS (atoms) at year end	6.77E+13	6.13E+13	6.17E+13	5.98E+13	6.10E+13	5.12E+13	4.53E+13	4.71E+13	5.09E+13	5.68E+13	5.46E+13	6.24E+13
# Ni-63 atoms/g 304 SS (atoms), due to this year irradiation, in 1994	5.97E+13	5.45E+13	5.52E+13	5.39E+13	5.53E+13	4.68E+13	4.17E+13	4.37E+13	4.75E+13	5.34E+13	5.17E+13	5.95E+13

Year	1988	1989	1990	1991	1992	1993	1994
$MW_{th}Hr$	429600	196800	561600	132000	295200	213600	182400
Modeled Irradiation Time (s)	2.47E+07	1.13E+07	3.23E+07	7.60E+06	1.70E+07	1.23E+07	1.05E+07
~Decay time (s)	1.89E+08	1.58E+08	1.26E+08	9.47E+07	6.31E+07	3.16E+07	0.00E+00
# Ni-63 atoms/g 304 SS (atoms) at year end	6.69E+13	3.07E+13	8.74E+13	2.06E+13	4.60E+13	3.33E+13	2.85E+13
# Ni-63 atoms/g 304 SS (atoms), due to this year irradiation, in 1994	6.42E+13	2.97E+13	8.50E+13	2.02E+13	4.54E+13	3.31E+13	2.85E+13

Total Ni-63 atoms @ End of irradiation (atoms)	1.25E+15
1994 Ni-63 Specific Activity (Ci/g 304 SS)	7.42E-06
2009 Ni-63 Specific Activity (Ci/g 304 SS)	6.69E-06

Low Pressure Plenum Bottom Plate	
~φ (n/cm^2-s)	3.00E+07
λ_{2T} (s^{-1})	2.19E-10

Year	1964	1965	1966	1967	1968	1969	1970	1971	1972	1973	1974	1975
$MW_{th}Hr$	16800	104160	172800	79200	168000	189600	273600	208800	256800	278400	319200	354240
Modeled Irradiation Time (s)	9.68E+05	6.00E+06	9.95E+06	4.56E+06	9.68E+06	1.09E+07	1.58E+07	1.20E+07	1.48E+07	1.60E+07	1.84E+07	2.04E+07
~Decay time (s)	9.47E+08	9.15E+08	8.84E+08	8.52E+08	8.20E+08	7.89E+08	7.57E+08	7.26E+08	6.94E+08	6.63E+08	6.31E+08	6.00E+08
# Ni-63 atoms/g 304 SS (atoms) at year end	1.43E+10	8.87E+10	1.47E+11	6.74E+10	1.43E+11	1.61E+11	2.33E+11	1.78E+11	2.18E+11	2.37E+11	2.71E+11	3.01E+11
# Ni-63 atoms/g 304 SS (atoms), due to this year irradiation, in 1994	1.16E+10	7.25E+10	1.21E+11	5.59E+10	1.19E+11	1.36E+11	1.97E+11	1.51E+11	1.88E+11	2.05E+11	2.36E+11	2.64E+11

Year	1976	1977	1978	1979	1980	1981	1982	1983	1984	1985	1986	1987
$MW_{th}Hr$	434400	393600	396000	384000	391200	328800	290400	302400	326400	364800	350400	400800
Modeled Irradiation Time (s)	2.50E+07	2.27E+07	2.28E+07	2.21E+07	2.25E+07	1.89E+07	1.67E+07	1.74E+07	1.88E+07	2.10E+07	2.02E+07	2.31E+07
~Decay time (s)	5.68E+08	5.36E+08	5.05E+08	4.73E+08	4.42E+08	4.10E+08	3.79E+08	3.47E+08	3.16E+08	2.84E+08	2.52E+08	2.21E+08
# Ni-63 atoms/g 304 SS (atoms) at year end	3.69E+11	3.34E+11	3.37E+11	3.26E+11	3.32E+11	2.80E+11	2.47E+11	2.57E+11	2.78E+11	3.10E+11	2.98E+11	3.41E+11
# Ni-63 atoms/g 304 SS (atoms), due to this year irradiation, in 1994	3.26E+11	2.97E+11	3.01E+11	2.94E+11	3.02E+11	2.55E+11	2.27E+11	2.38E+11	2.59E+11	2.91E+11	2.82E+11	3.24E+11

Year	1988	1989	1990	1991	1992	1993	1994
$MW_{th}Hr$	429600	196800	561600	132000	295200	213600	182400
Modeled Irradiation Time (s)	2.47E+07	1.13E+07	3.23E+07	7.60E+06	1.70E+07	1.23E+07	1.05E+07
~Decay time (s)	1.89E+08	1.58E+08	1.26E+08	9.47E+07	6.31E+07	3.16E+07	0.00E+00
# Ni-63 atoms/g 304 SS (atoms) at year end	3.65E+11	1.67E+11	4.77E+11	1.12E+11	2.51E+11	1.82E+11	1.55E+11
# Ni-63 atoms/g 304 SS (atoms), due to this year irradiation, in 1994	3.50E+11	1.62E+11	4.64E+11	1.10E+11	2.48E+11	1.80E+11	1.55E+11

Total Ni-63 atoms @ End of irradiation (atoms)	6.82E+12
1994 Ni-63 Specific Activity (Ci/g 304 SS)	4.05E-08
2009 Ni-63 Specific Activity (Ci/g 304 SS)	3.65E-08

Vessel Leveling Plate	
~φ (n/cm^2-s)	3.00E+06
λ_{2T} (s^{-1})	2.19E-10

Year	1964	1965	1966	1967	1968	1969	1970	1971	1972	1973	1974	1975
$MW_{th}Hr$	16800	104160	172800	79200	168000	189600	273600	208800	256800	278400	319200	354240
Modeled Irradiation Time (s)	9.68E+05	6.00E+06	9.95E+06	4.56E+06	9.68E+06	1.09E+07	1.58E+07	1.20E+07	1.48E+07	1.60E+07	1.84E+07	2.04E+07
~Decay time (s)	9.47E+08	9.15E+08	8.84E+08	8.52E+08	8.20E+08	7.89E+08	7.57E+08	7.26E+08	6.94E+08	6.63E+08	6.31E+08	6.00E+08
# Ni-63 atoms/g 304 SS (atoms) at year end	1.43E+09	8.87E+09	1.47E+10	6.74E+09	1.43E+10	1.61E+10	2.33E+10	1.78E+10	2.18E+10	2.37E+10	2.71E+10	3.01E+10
# Ni-63 atoms/g 304 SS (atoms), due to this year irradiation, in 1994	1.16E+09	7.25E+09	1.21E+10	5.59E+09	1.19E+10	1.36E+10	1.97E+10	1.51E+10	1.88E+10	2.05E+10	2.36E+10	2.64E+10

Year	1976	1977	1978	1979	1980	1981	1982	1983	1984	1985	1986	1987
$MW_{th}Hr$	434400	393600	396000	384000	391200	328800	290400	302400	326400	364800	350400	400800
Modeled Irradiation Time (s)	2.50E+07	2.27E+07	2.28E+07	2.21E+07	2.25E+07	1.89E+07	1.67E+07	1.74E+07	1.88E+07	2.10E+07	2.02E+07	2.31E+07
~Decay time (s)	5.68E+08	5.36E+08	5.05E+08	4.73E+08	4.42E+08	4.10E+08	3.79E+08	3.47E+08	3.16E+08	2.84E+08	2.52E+08	2.21E+08
# Ni-63 atoms/g 304 SS (atoms) at year end	3.69E+10	3.34E+10	3.37E+10	3.26E+10	3.32E+10	2.80E+10	2.47E+10	2.57E+10	2.78E+10	3.10E+10	2.98E+10	3.41E+10
# Ni-63 atoms/g 304 SS (atoms), due to this year irradiation, in 1994	3.26E+10	2.97E+10	3.01E+10	2.94E+10	3.02E+10	2.55E+10	2.27E+10	2.38E+10	2.59E+10	2.91E+10	2.82E+10	3.24E+10

Year	1988	1989	1990	1991	1992	1993	1994
$MW_{th}Hr$	429600	196800	561600	132000	295200	213600	182400
Modeled Irradiation Time (s)	2.47E+07	1.13E+07	3.23E+07	7.60E+06	1.70E+07	1.23E+07	1.05E+07
~Decay time (s)	1.89E+08	1.58E+08	1.26E+08	9.47E+07	6.31E+07	3.16E+07	0.00E+00
# Ni-63 atoms/g 304 SS (atoms) at year end	3.65E+10	1.67E+10	4.77E+10	1.12E+10	2.51E+10	1.82E+10	1.55E+10
# Ni-63 atoms/g 304 SS (atoms), due to this year irradiation, in 1994	3.50E+10	1.62E+10	4.64E+10	1.10E+10	2.48E+10	1.80E+10	1.55E+10

Total Ni-63 atoms @ End of irradiation (atoms)	6.82E+11
1994 Ni-63 Specific Activity (Ci/g 304 SS)	4.05E-09
2009 Ni-63 Specific Activity (Ci/g 304 SS)	3.65E-09

ATTACHMENT B

Ni-63 Activity per Gram of Graphite For EBR-II Neutron Shields

Inner Shield, Inner Row Graphite	
~φ (n/cm^2-s)	3.20E+11
λ_{2T} (s^{-1})	2.27E-10

Year	1964	1965	1966	1967	1968	1969	1970	1971	1972	1973	1974	1975
$MW_{th}Hr$	16800	104160	172800	79200	168000	189600	273600	208800	256800	278400	319200	354240
Modeled Irradiation Time (s)	9.68E+05	6.00E+06	9.95E+06	4.56E+06	9.68E+06	1.09E+07	1.58E+07	1.20E+07	1.48E+07	1.60E+07	1.84E+07	2.04E+07
~Decay time (s)	9.47E+08	9.15E+08	8.84E+08	8.52E+08	8.20E+08	7.89E+08	7.57E+08	7.26E+08	6.94E+08	6.63E+08	6.31E+08	6.00E+08
# Ni-63 atoms/g 304 SS (atoms) at year end	1.22E+09	7.57E+09	1.26E+10	5.76E+09	1.22E+10	1.38E+10	1.99E+10	1.52E+10	1.87E+10	2.02E+10	2.32E+10	2.57E+10
# Ni-63 atoms/g 304 SS (atoms), due to this year irradiation, in 1994	9.89E+08	6.17E+09	1.03E+10	4.76E+09	1.02E+10	1.15E+10	1.68E+10	1.29E+10	1.60E+10	1.74E+10	2.01E+10	2.25E+10

Year	1976	1977	1978	1979	1980	1981	1982	1983	1984	1985	1986	1987
$MW_{th}Hr$	434400	393600	396000	384000	391200	328800	290400	302400	326400	364800	350400	400800
Modeled Irradiation Time (s)	2.50E+07	2.27E+07	2.28E+07	2.21E+07	2.25E+07	1.89E+07	1.67E+07	1.74E+07	1.88E+07	2.10E+07	2.02E+07	2.31E+07
~Decay time (s)	5.68E+08	5.36E+08	5.05E+08	4.73E+08	4.42E+08	4.10E+08	3.79E+08	3.47E+08	3.16E+08	2.84E+08	2.52E+08	2.21E+08
# Ni-63 atoms/g 304 SS (atoms) at year end	3.15E+10	2.86E+10	2.87E+10	2.79E+10	2.84E+10	2.39E+10	2.11E+10	2.20E+10	2.37E+10	2.65E+10	2.54E+10	2.91E+10
# Ni-63 atoms/g 304 SS (atoms), due to this year irradiation, in 1994	2.78E+10	2.53E+10	2.57E+10	2.51E+10	2.57E+10	2.18E+10	1.94E+10	2.03E+10	2.21E+10	2.49E+10	2.40E+10	2.77E+10

Year	1988	1989	1990	1991	1992	1993	1994
$MW_{th}Hr$	429600	196800	561600	132000	295200	213600	182400
Modeled Irradiation Time (s)	2.47E+07	1.13E+07	3.23E+07	7.60E+06	1.70E+07	1.23E+07	1.05E+07
~Decay time (s)	1.89E+08	1.58E+08	1.26E+08	9.47E+07	6.31E+07	3.16E+07	0.00E+00
# Ni-63 atoms/g 304 SS (atoms) at year end	3.12E+10	1.43E+10	4.07E+10	9.60E+09	2.14E+10	1.55E+10	1.33E+10
# Ni-63 atoms/g 304 SS (atoms), due to this year irradiation, in 1994	2.99E+10	1.38E+10	3.96E+10	9.40E+09	2.11E+10	1.54E+10	1.33E+10

Total Ni-63 atoms @ End of irradiation (atoms)	5.82E+11
1994 Ni-63 Specific Activity (Ci/g Graphite)	3.45E-09
2009 Ni-63 Specific Activity (Ci/g Graphite)	3.11E-09

Inner Shield, Outer Row Graphite	
~φ (n/cm^2-s)	3.20E+11
λ_{2T} (s^{-1})	2.27E-10

Year	1964	1965	1966	1967	1968	1969	1970	1971	1972	1973	1974	1975
$MW_{th}Hr$	16800	104160	172800	79200	168000	189600	273600	208800	256800	278400	319200	354240
Modeled Irradiation Time (s)	9.68E+05	6.00E+06	9.95E+06	4.56E+06	9.68E+06	1.09E+07	1.58E+07	1.20E+07	1.48E+07	1.60E+07	1.84E+07	2.04E+07
~Decay time (s)	9.47E+08	9.15E+08	8.84E+08	8.52E+08	8.20E+08	7.89E+08	7.57E+08	7.26E+08	6.94E+08	6.63E+08	6.31E+08	6.00E+08
# Ni-63 atoms/g 304 SS (atoms) at year end	1.22E+09	7.57E+09	1.26E+10	5.76E+09	1.22E+10	1.38E+10	1.99E+10	1.52E+10	1.87E+10	2.02E+10	2.32E+10	2.57E+10
# Ni-63 atoms/g 304 SS (atoms), due to this year irradiation, in 1994	9.89E+08	6.17E+09	1.03E+10	4.76E+09	1.02E+10	1.15E+10	1.68E+10	1.29E+10	1.60E+10	1.74E+10	2.01E+10	2.25E+10

Year	1976	1977	1978	1979	1980	1981	1982	1983	1984	1985	1986	1987
$MW_{th}Hr$	434400	393600	396000	384000	391200	328800	290400	302400	326400	364800	350400	400800
Modeled Irradiation Time (s)	2.50E+07	2.27E+07	2.28E+07	2.21E+07	2.25E+07	1.89E+07	1.67E+07	1.74E+07	1.88E+07	2.10E+07	2.02E+07	2.31E+07
~Decay time (s)	5.68E+08	5.36E+08	5.05E+08	4.73E+08	4.42E+08	4.10E+08	3.79E+08	3.47E+08	3.16E+08	2.84E+08	2.52E+08	2.21E+08
# Ni-63 atoms/g 304 SS (atoms) at year end	3.15E+10	2.86E+10	2.87E+10	2.79E+10	2.84E+10	2.39E+10	2.11E+10	2.20E+10	2.37E+10	2.65E+10	2.54E+10	2.91E+10
# Ni-63 atoms/g 304 SS (atoms), due to this year irradiation, in 1994	2.78E+10	2.53E+10	2.57E+10	2.51E+10	2.57E+10	2.18E+10	1.94E+10	2.03E+10	2.21E+10	2.49E+10	2.40E+10	2.77E+10

Year	1988	1989	1990	1991	1992	1993	1994
$MW_{th}Hr$	429600	196800	561600	132000	295200	213600	182400
Modeled Irradiation Time (s)	2.47E+07	1.13E+07	3.23E+07	7.60E+06	1.70E+07	1.23E+07	1.05E+07
~Decay time (s)	1.89E+08	1.58E+08	1.26E+08	9.47E+07	6.31E+07	3.16E+07	0.00E+00
# Ni-63 atoms/g 304 SS (atoms) at year end	3.12E+10	1.43E+10	4.07E+10	9.60E+09	2.14E+10	1.55E+10	1.33E+10
# Ni-63 atoms/g 304 SS (atoms), due to this year irradiation, in 1994	2.99E+10	1.38E+10	3.96E+10	9.40E+09	2.11E+10	1.54E+10	1.33E+10

Total Ni-63 atoms @ End of irradiation (atoms)	5.82E+11
1994 Ni-63 Specific Activity (Ci/g Graphite)	3.45E-09
2009 Ni-63 Specific Activity (Ci/g Graphite)	3.11E-09

Outer Shield, 1st Row Graphite	
~φ (n/cm^2-s)	1.40E+11
λ_{2T} (s^{-1})	2.23E-10

Year	1964	1965	1966	1967	1968	1969	1970	1971	1972	1973	1974	1975
$MW_{th}Hr$	16800	104160	172800	79200	168000	189600	273600	208800	256800	278400	319200	354240
Modeled Irradiation Time (s)	9.68E+05	6.00E+06	9.95E+06	4.56E+06	9.68E+06	1.09E+07	1.58E+07	1.20E+07	1.48E+07	1.60E+07	1.84E+07	2.04E+07
~Decay time (s)	9.47E+08	9.15E+08	8.84E+08	8.52E+08	8.20E+08	7.89E+08	7.57E+08	7.26E+08	6.94E+08	6.63E+08	6.31E+08	6.00E+08
# Ni-63 atoms/g graphite (atoms) at year end	5.35E+08	3.31E+09	5.50E+09	2.52E+09	5.34E+09	6.03E+09	8.70E+09	6.64E+09	8.16E+09	8.85E+09	1.01E+10	1.13E+10
# Ni-63 atoms/g graphite (atoms), due to this year irradiation, in 1994	4.34E+08	2.71E+09	4.52E+09	2.09E+09	4.46E+09	5.06E+09	7.35E+09	5.65E+09	7.00E+09	7.64E+09	8.82E+09	9.85E+09

Year	1976	1977	1978	1979	1980	1981	1982	1983	1984	1985	1986	1987
$MW_{th}Hr$	434400	393600	396000	384000	391200	328800	290400	302400	326400	364800	350400	400800
Modeled Irradiation Time (s)	2.50E+07	2.27E+07	2.28E+07	2.21E+07	2.25E+07	1.89E+07	1.67E+07	1.74E+07	1.88E+07	2.10E+07	2.02E+07	2.31E+07
~Decay time (s)	5.68E+08	5.36E+08	5.05E+08	4.73E+08	4.42E+08	4.10E+08	3.79E+08	3.47E+08	3.16E+08	2.84E+08	2.52E+08	2.21E+08
# Ni-63 atoms/g graphite (atoms) at year end	1.38E+10	1.25E+10	1.26E+10	1.22E+10	1.24E+10	1.04E+10	9.23E+09	9.61E+09	1.04E+10	1.16E+10	1.11E+10	1.27E+10
# Ni-63 atoms/g graphite (atoms), due to this year irradiation, in 1994	1.22E+10	1.11E+10	1.12E+10	1.10E+10	1.13E+10	9.54E+09	8.49E+09	8.90E+09	9.67E+09	1.09E+10	1.05E+10	1.21E+10

Year	1988	1989	1990	1991	1992	1993	1994
$MW_{th}Hr$	429600	196800	561600	132000	295200	213600	182400
Modeled Irradiation Time (s)	2.47E+07	1.13E+07	3.23E+07	7.60E+06	1.70E+07	1.23E+07	1.05E+07
~Decay time (s)	1.89E+08	1.58E+08	1.26E+08	9.47E+07	6.31E+07	3.16E+07	0.00E+00
# Ni-63 atoms/g graphite (atoms) at year end	1.36E+10	6.26E+09	1.78E+10	4.20E+09	9.38E+09	6.79E+09	5.80E+09
# Ni-63 atoms/g graphite (atoms), due to this year irradiation, in 1994	1.31E+10	6.04E+09	1.73E+10	4.11E+09	9.25E+09	6.74E+09	5.80E+09

Total Ni-63 atoms @ End of irradiation (atoms)	2.55E+11
1994 Ni-63 Specific Activity (Ci/g Graphite)	1.51E-09
2009 Ni-63 Specific Activity (Ci/g Graphite)	1.36E-09

Outer Shield, 2nd Row Graphite	
~φ (n/cm^2-s)	5.50E+07
λ_{2T} (s^{-1})	2.19E-10

Year	1964	1965	1966	1967	1968	1969	1970	1971	1972	1973	1974	1975
$MW_{th}Hr$	16800	104160	172800	79200	168000	189600	273600	208800	256800	278400	319200	354240
Modeled Irradiation Time (s)	9.68E+05	6.00E+06	9.95E+06	4.56E+06	9.68E+06	1.09E+07	1.58E+07	1.20E+07	1.48E+07	1.60E+07	1.84E+07	2.04E+07
~Decay time (s)	9.47E+08	9.15E+08	8.84E+08	8.52E+08	8.20E+08	7.89E+08	7.57E+08	7.26E+08	6.94E+08	6.63E+08	6.31E+08	6.00E+08
# Ni-63 atoms/g graphite (atoms) at year end	2.10E+05	1.30E+06	2.16E+06	9.90E+05	2.10E+06	2.37E+06	3.42E+06	2.61E+06	3.21E+06	3.48E+06	3.98E+06	4.42E+06
# Ni-63 atoms/g graphite (atoms), due to this year irradiation, in 1994	1.71E+05	1.07E+06	1.78E+06	8.21E+05	1.75E+06	1.99E+06	2.89E+06	2.22E+06	2.75E+06	3.01E+06	3.47E+06	3.88E+06

Year	1976	1977	1978	1979	1980	1981	1982	1983	1984	1985	1986	1987
$MW_{th}Hr$	434400	393600	396000	384000	391200	328800	290400	302400	326400	364800	350400	400800
Modeled Irradiation Time (s)	2.50E+07	2.27E+07	2.28E+07	2.21E+07	2.25E+07	1.89E+07	1.67E+07	1.74E+07	1.88E+07	2.10E+07	2.02E+07	2.31E+07
~Decay time (s)	5.68E+08	5.36E+08	5.05E+08	4.73E+08	4.42E+08	4.10E+08	3.79E+08	3.47E+08	3.16E+08	2.84E+08	2.52E+08	2.21E+08
# Ni-63 atoms/g graphite (atoms) at year end	5.42E+06	4.91E+06	4.94E+06	4.79E+06	4.88E+06	4.10E+06	3.63E+06	3.78E+06	4.07E+06	4.55E+06	4.37E+06	5.00E+06
# Ni-63 atoms/g graphite (atoms), due to this year irradiation, in 1994	4.78E+06	4.37E+06	4.42E+06	4.32E+06	4.43E+06	3.75E+06	3.34E+06	3.50E+06	3.80E+06	4.28E+06	4.14E+06	4.76E+06

Year	1988	1989	1990	1991	1992	1993	1994
$MW_{th}Hr$	429600	196800	561600	132000	295200	213600	182400
Modeled Irradiation Time (s)	2.47E+07	1.13E+07	3.23E+07	7.60E+06	1.70E+07	1.23E+07	1.05E+07
~Decay time (s)	1.89E+08	1.58E+08	1.26E+08	9.47E+07	6.31E+07	3.16E+07	0.00E+00
# Ni-63 atoms/g graphite (atoms) at year end	5.36E+06	2.46E+06	7.00E+06	1.65E+06	3.69E+06	2.67E+06	2.28E+06
# Ni-63 atoms/g graphite (atoms), due to this year irradiation, in 1994	5.14E+06	2.37E+06	6.81E+06	1.62E+06	3.63E+06	2.65E+06	2.28E+06

Total Ni-63 atoms @ End of irradiation (atoms)	1.00E+08
1994 Ni-63 Specific Activity (Ci/g Graphite)	5.94E-13
2009 Ni-63 Specific Activity (Ci/g Graphite)	5.36E-13

Outer Shield, 3rd Row Graphite	
~φ (n/cm^2-s)	3.50E+08
λ_{2T} (s^{-1})	2.19E-10

Year	1964	1965	1966	1967	1968	1969	1970	1971	1972	1973	1974	1975
$MW_{th}Hr$	16800	104160	172800	79200	168000	189600	273600	208800	256800	278400	319200	354240
Modeled Irradiation Time (s)	9.68E+05	6.00E+06	9.95E+06	4.56E+06	9.68E+06	1.09E+07	1.58E+07	1.20E+07	1.48E+07	1.60E+07	1.84E+07	2.04E+07
~Decay time (s)	9.47E+08	9.15E+08	8.84E+08	8.52E+08	8.20E+08	7.89E+08	7.57E+08	7.26E+08	6.94E+08	6.63E+08	6.31E+08	6.00E+08
# Ni-63 atoms/g graphite (atoms) at year end	1.34E+06	8.28E+06	1.37E+07	6.30E+06	1.34E+07	1.51E+07	2.17E+07	1.66E+07	2.04E+07	2.21E+07	2.54E+07	2.81E+07
# Ni-63 atoms/g graphite (atoms), due to this year irradiation, in 1994	1.09E+06	6.78E+06	1.13E+07	5.23E+06	1.12E+07	1.27E+07	1.84E+07	1.42E+07	1.75E+07	1.91E+07	2.21E+07	2.47E+07

Year	1976	1977	1978	1979	1980	1981	1982	1983	1984	1985	1986	1987
$MW_{th}Hr$	434400	393600	396000	384000	391200	328800	290400	302400	326400	364800	350400	400800
Modeled Irradiation Time (s)	2.50E+07	2.27E+07	2.28E+07	2.21E+07	2.25E+07	1.89E+07	1.67E+07	1.74E+07	1.88E+07	2.10E+07	2.02E+07	2.31E+07
~Decay time (s)	5.68E+08	5.36E+08	5.05E+08	4.73E+08	4.42E+08	4.10E+08	3.79E+08	3.47E+08	3.16E+08	2.84E+08	2.52E+08	2.21E+08
# Ni-63 atoms/g graphite (atoms) at year end	3.45E+07	3.12E+07	3.14E+07	3.05E+07	3.11E+07	2.61E+07	2.31E+07	2.40E+07	2.59E+07	2.90E+07	2.78E+07	3.18E+07
# Ni-63 atoms/g graphite (atoms), due to this year irradiation, in 1994	3.04E+07	2.78E+07	2.81E+07	2.75E+07	2.82E+07	2.39E+07	2.12E+07	2.23E+07	2.42E+07	2.72E+07	2.63E+07	3.03E+07

Year	1988	1989	1990	1991	1992	1993	1994
$MW_{th}Hr$	429600	196800	561600	132000	295200	213600	182400
Modeled Irradiation Time (s)	2.47E+07	1.13E+07	3.23E+07	7.60E+06	1.70E+07	1.23E+07	1.05E+07
~Decay time (s)	1.89E+08	1.58E+08	1.26E+08	9.47E+07	6.31E+07	3.16E+07	0.00E+00
# Ni-63 atoms/g graphite (atoms) at year end	3.41E+07	1.56E+07	4.45E+07	1.05E+07	2.35E+07	1.70E+07	1.45E+07
# Ni-63 atoms/g graphite (atoms), due to this year irradiation, in 1994	3.27E+07	1.51E+07	4.33E+07	1.03E+07	2.31E+07	1.69E+07	1.45E+07

Total Ni-63 atoms @ End of irradiation (atoms)	6.38E+08
1994 Ni-63 Specific Activity (Ci/g Graphite)	3.78E-12
2009 Ni-63 Specific Activity (Ci/g Graphite)	3.41E-12

Outer Shield, 4th Row Graphite	
~φ (n/cm^2-s)	3.30E+06
λ_{2T} (s^{-1})	2.19E-10

Year	1964	1965	1966	1967	1968	1969	1970	1971	1972	1973	1974	1975
$MW_{th}Hr$	16800	104160	172800	79200	168000	189600	273600	208800	256800	278400	319200	354240
Modeled Irradiation Time (s)	9.68E+05	6.00E+06	9.95E+06	4.56E+06	9.68E+06	1.09E+07	1.58E+07	1.20E+07	1.48E+07	1.60E+07	1.84E+07	2.04E+07
~Decay time (s)	9.47E+08	9.15E+08	8.84E+08	8.52E+08	8.20E+08	7.89E+08	7.57E+08	7.26E+08	6.94E+08	6.63E+08	6.31E+08	6.00E+08
# Ni-63 atoms/g graphite (atoms) at year end	1.26E+04	7.81E+04	1.30E+05	5.94E+04	1.26E+05	1.42E+05	2.05E+05	1.56E+05	1.92E+05	2.09E+05	2.39E+05	2.65E+05
# Ni-63 atoms/g graphite (atoms), due to this year irradiation, in 1994	1.02E+04	6.39E+04	1.07E+05	4.93E+04	1.05E+05	1.20E+05	1.74E+05	1.33E+05	1.65E+05	1.80E+05	2.08E+05	2.33E+05

Year	1976	1977	1978	1979	1980	1981	1982	1983	1984	1985	1986	1987
$MW_{th}Hr$	434400	393600	396000	384000	391200	328800	290400	302400	326400	364800	350400	400800
Modeled Irradiation Time (s)	2.50E+07	2.27E+07	2.28E+07	2.21E+07	2.25E+07	1.89E+07	1.67E+07	1.74E+07	1.88E+07	2.10E+07	2.02E+07	2.31E+07
~Decay time (s)	5.68E+08	5.36E+08	5.05E+08	4.73E+08	4.42E+08	4.10E+08	3.79E+08	3.47E+08	3.16E+08	2.84E+08	2.52E+08	2.21E+08
# Ni-63 atoms/g graphite (atoms) at year end	3.25E+05	2.95E+05	2.96E+05	2.87E+05	2.93E+05	2.46E+05	2.18E+05	2.27E+05	2.44E+05	2.73E+05	2.62E+05	3.00E+05
# Ni-63 atoms/g graphite (atoms), due to this year irradiation, in 1994	2.87E+05	2.62E+05	2.65E+05	2.59E+05	2.66E+05	2.25E+05	2.00E+05	2.10E+05	2.28E+05	2.57E+05	2.48E+05	2.86E+05

Year	1988	1989	1990	1991	1992	1993	1994
$MW_{th}Hr$	429600	196800	561600	132000	295200	213600	182400
Modeled Irradiation Time (s)	2.47E+07	1.13E+07	3.23E+07	7.60E+06	1.70E+07	1.23E+07	1.05E+07
~Decay time (s)	1.89E+08	1.58E+08	1.26E+08	9.47E+07	6.31E+07	3.16E+07	0.00E+00
# Ni-63 atoms/g graphite (atoms) at year end	3.22E+05	1.48E+05	4.20E+05	9.90E+04	2.21E+05	1.60E+05	1.37E+05
# Ni-63 atoms/g graphite (atoms), due to this year irradiation, in 1994	3.08E+05	1.42E+05	4.08E+05	9.69E+04	2.18E+05	1.59E+05	1.37E+05

Total Ni-63 atoms @ End of irradiation (atoms)	6.01E+06
1994 Ni-63 Specific Activity (Ci/g Graphite)	3.56E-14
2009 Ni-63 Specific Activity (Ci/g Graphite)	3.21E-14

Outer Shield, 5th Row Graphite	
~φ (n/cm^2-s)	3.50E+06
λ_{2T} (s^{-1})	2.19E-10

Year	1964	1965	1966	1967	1968	1969	1970	1971	1972	1973	1974	1975
$MW_{th}Hr$	16800	104160	172800	79200	168000	189600	273600	208800	256800	278400	319200	354240
Modeled Irradiation Time (s)	9.68E+05	6.00E+06	9.95E+06	4.56E+06	9.68E+06	1.09E+07	1.58E+07	1.20E+07	1.48E+07	1.60E+07	1.84E+07	2.04E+07
~Decay time (s)	9.47E+08	9.15E+08	8.84E+08	8.52E+08	8.20E+08	7.89E+08	7.57E+08	7.26E+08	6.94E+08	6.63E+08	6.31E+08	6.00E+08
# Ni-63 atoms/g graphite (atoms) at year end	1.34E+04	8.28E+04	1.37E+05	6.30E+04	1.34E+05	1.51E+05	2.17E+05	1.66E+05	2.04E+05	2.21E+05	2.54E+05	2.81E+05
# Ni-63 atoms/g graphite (atoms), due to this year irradiation, in 1994	1.09E+04	6.78E+04	1.13E+05	5.23E+04	1.12E+05	1.27E+05	1.84E+05	1.42E+05	1.75E+05	1.91E+05	2.21E+05	2.47E+05

Year	1976	1977	1978	1979	1980	1981	1982	1983	1984	1985	1986	1987
$MW_{th}Hr$	434400	393600	396000	384000	391200	328800	290400	302400	326400	364800	350400	400800
Modeled Irradiation Time (s)	2.50E+07	2.27E+07	2.28E+07	2.21E+07	2.25E+07	1.89E+07	1.67E+07	1.74E+07	1.88E+07	2.10E+07	2.02E+07	2.31E+07
~Decay time (s)	5.68E+08	5.36E+08	5.05E+08	4.73E+08	4.42E+08	4.10E+08	3.79E+08	3.47E+08	3.16E+08	2.84E+08	2.52E+08	2.21E+08
# Ni-63 atoms/g graphite (atoms) at year end	3.45E+05	3.12E+05	3.14E+05	3.05E+05	3.11E+05	2.61E+05	2.31E+05	2.40E+05	2.59E+05	2.90E+05	2.78E+05	3.18E+05
# Ni-63 atoms/g graphite (atoms), due to this year irradiation, in 1994	3.04E+05	2.78E+05	2.81E+05	2.75E+05	2.82E+05	2.39E+05	2.12E+05	2.23E+05	2.42E+05	2.72E+05	2.63E+05	3.03E+05

Year	1988	1989	1990	1991	1992	1993	1994
$MW_{th}Hr$	429600	196800	561600	132000	295200	213600	182400
Modeled Irradiation Time (s)	2.47E+07	1.13E+07	3.23E+07	7.60E+06	1.70E+07	1.23E+07	1.05E+07
~Decay time (s)	1.89E+08	1.58E+08	1.26E+08	9.47E+07	6.31E+07	3.16E+07	0.00E+00
# Ni-63 atoms/g graphite (atoms) at year end	3.41E+05	1.56E+05	4.45E+05	1.05E+05	2.35E+05	1.70E+05	1.45E+05
# Ni-63 atoms/g graphite (atoms), due to this year irradiation, in 1994	3.27E+05	1.51E+05	4.33E+05	1.03E+05	2.31E+05	1.69E+05	1.45E+05

Total Ni-63 atoms @ End of irradiation (atoms)	6.38E+06
1994 Ni-63 Specific Activity (Ci/g Graphite)	3.78E-14
2009 Ni-63 Specific Activity (Ci/g Graphite)	3.41E-14

Upper Neutron Shield, 1st Row Graphite	
~φ (n/cm^2-s)	2.50E+09
λ_{2T} (s^{-1})	2.19E-10

Year	1964	1965	1966	1967	1968	1969	1970	1971	1972	1973	1974	1975
$MW_{th}Hr$	16800	104160	172800	79200	168000	189600	273600	208800	256800	278400	319200	354240
Modeled Irradiation Time (s)	9.68E+05	6.00E+06	9.95E+06	4.56E+06	9.68E+06	1.09E+07	1.58E+07	1.20E+07	1.48E+07	1.60E+07	1.84E+07	2.04E+07
~Decay time (s)	9.47E+08	9.15E+08	8.84E+08	8.52E+08	8.20E+08	7.89E+08	7.57E+08	7.26E+08	6.94E+08	6.63E+08	6.31E+08	6.00E+08
# Ni-63 atoms/g graphite (atoms) at year end	9.55E+06	5.92E+07	9.81E+07	4.50E+07	9.54E+07	1.08E+08	1.55E+08	1.19E+08	1.46E+08	1.58E+08	1.81E+08	2.01E+08
# Ni-63 atoms/g graphite (atoms), due to this year irradiation, in 1994	7.76E+06	4.84E+07	8.08E+07	3.73E+07	7.97E+07	9.05E+07	1.32E+08	1.01E+08	1.25E+08	1.37E+08	1.58E+08	1.76E+08

Year	1976	1977	1978	1979	1980	1981	1982	1983	1984	1985	1986	1987
$MW_{th}Hr$	434400	393600	396000	384000	391200	328800	290400	302400	326400	364800	350400	400800
Modeled Irradiation Time (s)	2.50E+07	2.27E+07	2.28E+07	2.21E+07	2.25E+07	1.89E+07	1.67E+07	1.74E+07	1.88E+07	2.10E+07	2.02E+07	2.31E+07
~Decay time (s)	5.68E+08	5.36E+08	5.05E+08	4.73E+08	4.42E+08	4.10E+08	3.79E+08	3.47E+08	3.16E+08	2.84E+08	2.52E+08	2.21E+08
# Ni-63 atoms/g graphite (atoms) at year end	2.46E+08	2.23E+08	2.25E+08	2.18E+08	2.22E+08	1.87E+08	1.65E+08	1.72E+08	1.85E+08	2.07E+08	1.99E+08	2.27E+08
# Ni-63 atoms/g graphite (atoms), due to this year irradiation, in 1994	2.17E+08	1.98E+08	2.01E+08	1.96E+08	2.01E+08	1.70E+08	1.52E+08	1.59E+08	1.73E+08	1.94E+08	1.88E+08	2.17E+08

Year	1988	1989	1990	1991	1992	1993	1994
$MW_{th}Hr$	429600	196800	561600	132000	295200	213600	182400
Modeled Irradiation Time (s)	2.47E+07	1.13E+07	3.23E+07	7.60E+06	1.70E+07	1.23E+07	1.05E+07
~Decay time (s)	1.89E+08	1.58E+08	1.26E+08	9.47E+07	6.31E+07	3.16E+07	0.00E+00
# Ni-63 atoms/g graphite (atoms) at year end	2.44E+08	1.12E+08	3.18E+08	7.50E+07	1.68E+08	1.21E+08	1.04E+08
# Ni-63 atoms/g graphite (atoms), due to this year irradiation, in 1994	2.34E+08	1.08E+08	3.09E+08	7.34E+07	1.65E+08	1.20E+08	1.04E+08

Total Ni-63 atoms @ End of irradiation (atoms)	4.55E+09
1994 Ni-63 Specific Activity (Ci/g Graphite)	2.70E-11
2009 Ni-63 Specific Activity (Ci/g Graphite)	2.43E-11

Neutron Shield, 2nd Row Graphite	
~φ (n/cm^2-s)	1.00E+09
λ_{2T} (s^{-1})	2.19E-10

Year	1964	1965	1966	1967	1968	1969	1970	1971	1972	1973	1974	1975
$MW_{th}Hr$	16800	104160	172800	79200	168000	189600	273600	208800	256800	278400	319200	354240
Modeled Irradiation Time (s)	9.68E+05	6.00E+06	9.95E+06	4.56E+06	9.68E+06	1.09E+07	1.58E+07	1.20E+07	1.48E+07	1.60E+07	1.84E+07	2.04E+07
~Decay time (s)	9.47E+08	9.15E+08	8.84E+08	8.52E+08	8.20E+08	7.89E+08	7.57E+08	7.26E+08	6.94E+08	6.63E+08	6.31E+08	6.00E+08
# Ni-63 atoms/g graphite (atoms) at year end	3.82E+06	2.37E+07	3.93E+07	1.80E+07	3.82E+07	4.31E+07	6.21E+07	4.74E+07	5.83E+07	6.32E+07	7.24E+07	8.04E+07
# Ni-63 atoms/g graphite (atoms), due to this year irradiation, in 1994	3.10E+06	1.94E+07	3.23E+07	1.49E+07	3.19E+07	3.62E+07	5.26E+07	4.04E+07	5.01E+07	5.46E+07	6.31E+07	7.05E+07

Year	1976	1977	1978	1979	1980	1981	1982	1983	1984	1985	1986	1987
$MW_{th}Hr$	434400	393600	396000	384000	391200	328800	290400	302400	326400	364800	350400	400800
Modeled Irradiation Time (s)	2.50E+07	2.27E+07	2.28E+07	2.21E+07	2.25E+07	1.89E+07	1.67E+07	1.74E+07	1.88E+07	2.10E+07	2.02E+07	2.31E+07
~Decay time (s)	5.68E+08	5.36E+08	5.05E+08	4.73E+08	4.42E+08	4.10E+08	3.79E+08	3.47E+08	3.16E+08	2.84E+08	2.52E+08	2.21E+08
# Ni-63 atoms/g graphite (atoms) at year end	9.85E+07	8.93E+07	8.98E+07	8.71E+07	8.87E+07	7.46E+07	6.59E+07	6.86E+07	7.41E+07	8.28E+07	7.95E+07	9.09E+07
# Ni-63 atoms/g graphite (atoms), due to this year irradiation, in 1994	8.70E+07	7.94E+07	8.04E+07	7.85E+07	8.05E+07	6.82E+07	6.07E+07	6.36E+07	6.91E+07	7.78E+07	7.52E+07	8.66E+07

Year	1988	1989	1990	1991	1992	1993	1994
$MW_{th}Hr$	429600	196800	561600	132000	295200	213600	182400
Modeled Irradiation Time (s)	2.47E+07	1.13E+07	3.23E+07	7.60E+06	1.70E+07	1.23E+07	1.05E+07
~Decay time (s)	1.89E+08	1.58E+08	1.26E+08	9.47E+07	6.31E+07	3.16E+07	0.00E+00
# Ni-63 atoms/g graphite (atoms) at year end	9.74E+07	4.47E+07	1.27E+08	3.00E+07	6.70E+07	4.85E+07	4.14E+07
# Ni-63 atoms/g graphite (atoms), due to this year irradiation, in 1994	9.35E+07	4.32E+07	1.24E+08	2.94E+07	6.61E+07	4.82E+07	4.14E+07

Total Ni-63 atoms @ End of irradiation (atoms)	1.82E+09
1994 Ni-63 Specific Activity (Ci/g Graphite)	1.08E-11
2009 Ni-63 Specific Activity (Ci/g Graphite)	9.74E-12

Upper Neutron Shield, 3rd Row Graphite	
~φ (n/cm^2-s)	2.50E+08
λ_{2T} (s^{-1})	2.19E-10

Year	1964	1965	1966	1967	1968	1969	1970	1971	1972	1973	1974	1975
$MW_{th}Hr$	16800	104160	172800	79200	168000	189600	273600	208800	256800	278400	319200	354240
Modeled Irradiation Time (s)	9.68E+05	6.00E+06	9.95E+06	4.56E+06	9.68E+06	1.09E+07	1.58E+07	1.20E+07	1.48E+07	1.60E+07	1.84E+07	2.04E+07
~Decay time (s)	9.47E+08	9.15E+08	8.84E+08	8.52E+08	8.20E+08	7.89E+08	7.57E+08	7.26E+08	6.94E+08	6.63E+08	6.31E+08	6.00E+08
# Ni-63 atoms/g graphite (atoms) at year end	9.55E+05	5.92E+06	9.81E+06	4.50E+06	9.54E+06	1.08E+07	1.55E+07	1.19E+07	1.46E+07	1.58E+07	1.81E+07	2.01E+07
# Ni-63 atoms/g graphite (atoms), due to this year irradiation, in 1994	7.76E+05	4.84E+06	8.08E+06	3.73E+06	7.97E+06	9.05E+06	1.32E+07	1.01E+07	1.25E+07	1.37E+07	1.58E+07	1.76E+07

Year	1976	1977	1978	1979	1980	1981	1982	1983	1984	1985	1986	1987
$MW_{th}Hr$	434400	393600	396000	384000	391200	328800	290400	302400	326400	364800	350400	400800
Modeled Irradiation Time (s)	2.50E+07	2.27E+07	2.28E+07	2.21E+07	2.25E+07	1.89E+07	1.67E+07	1.74E+07	1.88E+07	2.10E+07	2.02E+07	2.31E+07
~Decay time (s)	5.68E+08	5.36E+08	5.05E+08	4.73E+08	4.42E+08	4.10E+08	3.79E+08	3.47E+08	3.16E+08	2.84E+08	2.52E+08	2.21E+08
# Ni-63 atoms/g graphite (atoms) at year end	2.46E+07	2.23E+07	2.25E+07	2.18E+07	2.22E+07	1.87E+07	1.65E+07	1.72E+07	1.85E+07	2.07E+07	1.99E+07	2.27E+07
# Ni-63 atoms/g graphite (atoms), due to this year irradiation, in 1994	2.17E+07	1.98E+07	2.01E+07	1.96E+07	2.01E+07	1.70E+07	1.52E+07	1.59E+07	1.73E+07	1.94E+07	1.88E+07	2.17E+07

Year	1988	1989	1990	1991	1992	1993	1994
$MW_{th}Hr$	429600	196800	561600	132000	295200	213600	182400
Modeled Irradiation Time (s)	2.47E+07	1.13E+07	3.23E+07	7.60E+06	1.70E+07	1.23E+07	1.05E+07
~Decay time (s)	1.89E+08	1.58E+08	1.26E+08	9.47E+07	6.31E+07	3.16E+07	0.00E+00
# Ni-63 atoms/g graphite (atoms) at year end	2.44E+07	1.12E+07	3.18E+07	7.50E+06	1.68E+07	1.21E+07	1.04E+07
# Ni-63 atoms/g graphite (atoms), due to this year irradiation, in 1994	2.34E+07	1.08E+07	3.09E+07	7.34E+06	1.65E+07	1.20E+07	1.04E+07

Total Ni-63 atoms @ End of irradiation (atoms)	4.55E+08
1994 Ni-63 Specific Activity (Ci/g Graphite)	2.70E-12
2009 Ni-63 Specific Activity (Ci/g Graphite)	2.43E-12

Upper Neutron Shield, 4th Row Graphite	
~φ (n/cm^2-s)	8.00E+07
λ_{2T} (s^{-1})	2.19E-10

Year	1964	1965	1966	1967	1968	1969	1970	1971	1972	1973	1974	1975
$MW_{th}Hr$	16800	104160	172800	79200	168000	189600	273600	208800	256800	278400	319200	354240
Modeled Irradiation Time (s)	9.68E+05	6.00E+06	9.95E+06	4.56E+06	9.68E+06	1.09E+07	1.58E+07	1.20E+07	1.48E+07	1.60E+07	1.84E+07	2.04E+07
~Decay time (s)	9.47E+08	9.15E+08	8.84E+08	8.52E+08	8.20E+08	7.89E+08	7.57E+08	7.26E+08	6.94E+08	6.63E+08	6.31E+08	6.00E+08
# Ni-63 atoms/g graphite (atoms) at year end	3.06E+05	1.89E+06	3.14E+06	1.44E+06	3.05E+06	3.45E+06	4.97E+06	3.79E+06	4.66E+06	5.06E+06	5.80E+06	6.43E+06
# Ni-63 atoms/g graphite (atoms), due to this year irradiation, in 1994	2.48E+05	1.55E+06	2.59E+06	1.19E+06	2.55E+06	2.90E+06	4.21E+06	3.24E+06	4.01E+06	4.37E+06	5.05E+06	5.64E+06

Year	1976	1977	1978	1979	1980	1981	1982	1983	1984	1985	1986	1987
$MW_{th}Hr$	434400	393600	396000	384000	391200	328800	290400	302400	326400	364800	350400	400800
Modeled Irradiation Time (s)	2.50E+07	2.27E+07	2.28E+07	2.21E+07	2.25E+07	1.89E+07	1.67E+07	1.74E+07	1.88E+07	2.10E+07	2.02E+07	2.31E+07
~Decay time (s)	5.68E+08	5.36E+08	5.05E+08	4.73E+08	4.42E+08	4.10E+08	3.79E+08	3.47E+08	3.16E+08	2.84E+08	2.52E+08	2.21E+08
# Ni-63 atoms/g graphite (atoms) at year end	7.88E+06	7.14E+06	7.19E+06	6.97E+06	7.10E+06	5.97E+06	5.27E+06	5.49E+06	5.93E+06	6.62E+06	6.36E+06	7.27E+06
# Ni-63 atoms/g graphite (atoms), due to this year irradiation, in 1994	6.96E+06	6.35E+06	6.43E+06	6.28E+06	6.44E+06	5.46E+06	4.85E+06	5.09E+06	5.53E+06	6.22E+06	6.02E+06	6.93E+06

Year	1988	1989	1990	1991	1992	1993	1994
$MW_{th}Hr$	429600	196800	561600	132000	295200	213600	182400
Modeled Irradiation Time (s)	2.47E+07	1.13E+07	3.23E+07	7.60E+06	1.70E+07	1.23E+07	1.05E+07
~Decay time (s)	1.89E+08	1.58E+08	1.26E+08	9.47E+07	6.31E+07	3.16E+07	0.00E+00
# Ni-63 atoms/g graphite (atoms) at year end	7.79E+06	3.58E+06	1.02E+07	2.40E+06	5.36E+06	3.88E+06	3.31E+06
# Ni-63 atoms/g graphite (atoms), due to this year irradiation, in 1994	7.48E+06	3.45E+06	9.90E+06	2.35E+06	5.29E+06	3.85E+06	3.31E+06

Total Ni-63 atoms @ End of irradiation (atoms)	1.46E+08
1994 Ni-63 Specific Activity (Ci/g Graphite)	8.64E-13
2009 Ni-63 Specific Activity (Ci/g Graphite)	7.79E-13

Upper Neutron Shield, 5th Row Graphite	
~φ (n/cm^2-s)	1.50E+07
λ_{2T} (s^{-1})	2.19E-10

Year	1964	1965	1966	1967	1968	1969	1970	1971	1972	1973	1974	1975
$MW_{th}Hr$	16800	104160	172800	79200	168000	189600	273600	208800	256800	278400	319200	354240
Modeled Irradiation Time (s)	9.68E+05	6.00E+06	9.95E+06	4.56E+06	9.68E+06	1.09E+07	1.58E+07	1.20E+07	1.48E+07	1.60E+07	1.84E+07	2.04E+07
~Decay time (s)	9.47E+08	9.15E+08	8.84E+08	8.52E+08	8.20E+08	7.89E+08	7.57E+08	7.26E+08	6.94E+08	6.63E+08	6.31E+08	6.00E+08
# Ni-63 atoms/g graphite (atoms) at year end	5.73E+04	3.55E+05	5.89E+05	2.70E+05	5.72E+05	6.46E+05	9.32E+05	7.11E+05	8.75E+05	9.48E+05	1.09E+06	1.21E+06
# Ni-63 atoms/g graphite (atoms), due to this year irradiation, in 1994	4.66E+04	2.90E+05	4.85E+05	2.24E+05	4.78E+05	5.43E+05	7.89E+05	6.07E+05	7.51E+05	8.20E+05	9.46E+05	1.06E+06

Year	1976	1977	1978	1979	1980	1981	1982	1983	1984	1985	1986	1987
$MW_{th}Hr$	434400	393600	396000	384000	391200	328800	290400	302400	326400	364800	350400	400800
Modeled Irradiation Time (s)	2.50E+07	2.27E+07	2.28E+07	2.21E+07	2.25E+07	1.89E+07	1.67E+07	1.74E+07	1.88E+07	2.10E+07	2.02E+07	2.31E+07
~Decay time (s)	5.68E+08	5.36E+08	5.05E+08	4.73E+08	4.42E+08	4.10E+08	3.79E+08	3.47E+08	3.16E+08	2.84E+08	2.52E+08	2.21E+08
# Ni-63 atoms/g graphite (atoms) at year end	1.48E+06	1.34E+06	1.35E+06	1.31E+06	1.33E+06	1.12E+06	9.89E+05	1.03E+06	1.11E+06	1.24E+06	1.19E+06	1.36E+06
# Ni-63 atoms/g graphite (atoms), due to this year irradiation, in 1994	1.30E+06	1.19E+06	1.21E+06	1.18E+06	1.21E+06	1.02E+06	9.10E+05	9.54E+05	1.04E+06	1.17E+06	1.13E+06	1.30E+06

Year	1988	1989	1990	1991	1992	1993	1994
$MW_{th}Hr$	429600	196800	561600	132000	295200	213600	182400
Modeled Irradiation Time (s)	2.47E+07	1.13E+07	3.23E+07	7.60E+06	1.70E+07	1.23E+07	1.05E+07
~Decay time (s)	1.89E+08	1.58E+08	1.26E+08	9.47E+07	6.31E+07	3.16E+07	0.00E+00
# Ni-63 atoms/g graphite (atoms) at year end	1.46E+06	6.70E+05	1.91E+06	4.50E+05	1.01E+06	7.28E+05	6.21E+05
# Ni-63 atoms/g graphite (atoms), due to this year irradiation, in 1994	1.40E+06	6.48E+05	1.86E+06	4.41E+05	9.91E+05	7.23E+05	6.21E+05

Total Ni-63 atoms @ End of irradiation (atoms)	2.73E+07
1994 Ni-63 Specific Activity (Ci/g Graphite)	1.62E-13
2009 Ni-63 Specific Activity (Ci/g Graphite)	1.46E-13

Upper Neutron Shield, 6th Row Graphite												
~φ (n/cm^2-s)	4.00E+06											
λ_{2T} (s^{-1})	2.19E-10											
Year	1964	1965	1966	1967	1968	1969	1970	1971	1972	1973	1974	1975
$MW_{th}Hr$	16800	104160	172800	79200	168000	189600	273600	208800	256800	278400	319200	354240
Modeled Irradiation Time (s)	9.68E+05	6.00E+06	9.95E+06	4.56E+06	9.68E+06	1.09E+07	1.58E+07	1.20E+07	1.48E+07	1.60E+07	1.84E+07	2.04E+07
~Decay time (s)	9.47E+08	9.15E+08	8.84E+08	8.52E+08	8.20E+08	7.89E+08	7.57E+08	7.26E+08	6.94E+08	6.63E+08	6.31E+08	6.00E+08
# Ni-63 atoms/g graphite (atoms) at year end	1.53E+04	9.47E+04	1.57E+05	7.20E+04	1.53E+05	1.72E+05	2.48E+05	1.90E+05	2.33E+05	2.53E+05	2.90E+05	3.22E+05
# Ni-63 atoms/g graphite (atoms), due to this year irradiation, in 1994	1.24E+04	7.75E+04	1.29E+05	5.97E+04	1.28E+05	1.45E+05	2.10E+05	1.62E+05	2.00E+05	2.19E+05	2.52E+05	2.82E+05
Year	1976	1977	1978	1979	1980	1981	1982	1983	1984	1985	1986	1987
$MW_{th}Hr$	434400	393600	396000	384000	391200	328800	290400	302400	326400	364800	350400	400800
Modeled Irradiation Time (s)	2.50E+07	2.27E+07	2.28E+07	2.21E+07	2.25E+07	1.89E+07	1.67E+07	1.74E+07	1.88E+07	2.10E+07	2.02E+07	2.31E+07
~Decay time (s)	5.68E+08	5.36E+08	5.05E+08	4.73E+08	4.42E+08	4.10E+08	3.79E+08	3.47E+08	3.16E+08	2.84E+08	2.52E+08	2.21E+08
# Ni-63 atoms/g graphite (atoms) at year end	3.94E+05	3.57E+05	3.59E+05	3.48E+05	3.55E+05	2.98E+05	2.64E+05	2.75E+05	2.96E+05	3.31E+05	3.18E+05	3.64E+05
# Ni-63 atoms/g graphite (atoms), due to this year irradiation, in 1994	3.48E+05	3.17E+05	3.22E+05	3.14E+05	3.22E+05	2.73E+05	2.43E+05	2.54E+05	2.76E+05	3.11E+05	3.01E+05	3.46E+05
Year	1988	1989	1990	1991	1992	1993	1994					
$MW_{th}Hr$	429600	196800	561600	132000	295200	213600	182400					
Modeled Irradiation Time (s)	2.47E+07	1.13E+07	3.23E+07	7.60E+06	1.70E+07	1.23E+07	1.05E+07					
~Decay time (s)	1.89E+08	1.58E+08	1.26E+08	9.47E+07	6.31E+07	3.16E+07	0.00E+00					
# Ni-63 atoms/g graphite (atoms) at year end	3.90E+05	1.79E+05	5.09E+05	1.20E+05	2.68E+05	1.94E+05	1.66E+05					
# Ni-63 atoms/g graphite (atoms), due to this year irradiation, in 1994	3.74E+05	1.73E+05	4.95E+05	1.18E+05	2.64E+05	1.93E+05	1.66E+05					
Total Ni-63 atoms @ End of irradiation (atoms)	7.29E+06											
1994 Ni-63 Specific Activity (Ci/g Graphite)	4.32E-14											
2009 Ni-63 Specific Activity (Ci/g Graphite)	3.89E-14											

ATTACHMENT C

Ni-63 Activity per Gram of Stellite For EBR-II Reactor Components

Stellite Guide Tubes	
~φ (n/cm^2-s)	1.00E+08
λ_{2T} (s^{-1})	2.19E-10

Year	1964	1965	1966	1967	1968	1969	1970	1971	1972	1973	1974	1975
$MW_{th}Hr$	16800	104160	172800	79200	168000	189600	273600	208800	256800	278400	319200	354240
Modeled Irradiation Time (s)	9.68E+05	6.00E+06	9.95E+06	4.56E+06	9.68E+06	1.09E+07	1.58E+07	1.20E+07	1.48E+07	1.60E+07	1.84E+07	2.04E+07
~Decay time (s)	9.47E+08	9.15E+08	8.84E+08	8.52E+08	8.20E+08	7.89E+08	7.57E+08	7.26E+08	6.94E+08	6.63E+08	6.31E+08	6.00E+08
# Ni-63 atoms/g Stellite (atoms) at year end	5.17E+09	3.20E+10	5.31E+10	2.44E+10	5.16E+10	5.83E+10	8.40E+10	6.42E+10	7.89E+10	8.55E+10	9.80E+10	1.09E+11
# Ni-63 atoms/g Stellite (atoms), due to this year irradiation, in 1994	4.20E+09	2.62E+10	4.37E+10	2.02E+10	4.31E+10	4.90E+10	7.12E+10	5.47E+10	6.77E+10	7.39E+10	8.53E+10	9.53E+10

Year	1976	1977	1978	1979	1980	1981	1982	1983	1984	1985	1986	1987
$MW_{th}Hr$	434400	393600	396000	384000	391200	328800	290400	302400	326400	364800	350400	400800
Modeled Irradiation Time (s)	2.50E+07	2.27E+07	2.28E+07	2.21E+07	2.25E+07	1.89E+07	1.67E+07	1.74E+07	1.88E+07	2.10E+07	2.02E+07	2.31E+07
~Decay time (s)	5.68E+08	5.36E+08	5.05E+08	4.73E+08	4.42E+08	4.10E+08	3.79E+08	3.47E+08	3.16E+08	2.84E+08	2.52E+08	2.21E+08
# Ni-63 atoms/g Stellite (atoms) at year end	1.33E+11	1.21E+11	1.22E+11	1.18E+11	1.20E+11	1.01E+11	8.92E+10	9.29E+10	1.00E+11	1.12E+11	1.08E+11	1.23E+11
# Ni-63 atoms/g Stellite (atoms), due to this year irradiation, in 1994	1.18E+11	1.07E+11	1.09E+11	1.06E+11	1.09E+11	9.23E+10	8.21E+10	8.61E+10	9.35E+10	1.05E+11	1.02E+11	1.17E+11

Year	1988	1989	1990	1991	1992	1993	1994
$MW_{th}Hr$	429600	196800	561600	132000	295200	213600	182400
Modeled Irradiation Time (s)	2.47E+07	1.13E+07	3.23E+07	7.60E+06	1.70E+07	1.23E+07	1.05E+07
~Decay time (s)	1.89E+08	1.58E+08	1.26E+08	9.47E+07	6.31E+07	3.16E+07	0.00E+00
# Ni-63 atoms/g Stellite (atoms) at year end	1.32E+11	6.05E+10	1.72E+11	4.06E+10	9.07E+10	6.56E+10	5.61E+10
# Ni-63 atoms/g Stellite (atoms), due to this year irradiation, in 1994	1.26E+11	5.84E+10	1.67E+11	3.97E+10	8.94E+10	6.52E+10	5.61E+10

Total Ni-63 atoms @ End of irradiation (atoms)	2.46E+12
1994 Ni-63 Specific Activity (Ci/g Stellite)	1.46E-08
2009 Ni-63 Specific Activity (Ci/g Stellite)	1.32E-08

ATTACHMENT D

PRIMARY PUMP IMPELLER MICROSHIELD MODEL

MicroShield 7.02
ICP (7.02-0000)

Date	By	Checked

Filename	Run Date	Run Time	Duration
TBL-194.ms7	4-Jun-09	1:27:26 PM	0:00:00

Project Info	
Case Title	TBL-194
Description	Primary Pump Impeller, 882 mR/hr
Geometry	3 - Disk

Source Dimensions	
Radius	7.62 cm (3.0 in)

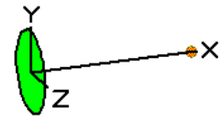

Dose Points			
A	X	Y	Z
#1	30.48 cm (1 ft)	0.0 cm (0.0 in)	0.0 cm (0.0 in)

Shields			
Shield N	Dimension	Material	Density
Air Gap		Air	0.00122

Source Input: Grouping Method - Actual Photon Energies				
Nuclide	Ci	Bq	µCi/cm²	Bq/cm²
Mn-54	1.23E-01	4.57E+09	6.77E+02	2.50E+07

Buildup: The material reference is Air Gap Integration Parameters	
Radial	20
Circumferential	20

Results

Energy (MeV)	Activity (Photons/sec)	Fluence Rate MeV/cm²/sec No Buildup	Fluence Rate MeV/cm²/sec With Buildup	Exposure Rate mR/hr No Buildup	Exposure Rate mR/hr With Buildup
0.0006	1.69E+07	7.56E-01	7.66E-01	4.06E+00	4.12E+00
0.0054	3.39E+08	1.44E+02	1.46E+02	8.15E+01	8.26E+01
0.0054	6.72E+08	2.85E+02	2.89E+02	1.62E+02	1.64E+02
0.0059	1.35E+08	6.28E+01	6.36E+01	3.23E+01	3.27E+01
0.8348	4.57E+09	3.16E+05	3.17E+05	5.98E+02	5.99E+02
Totals	**5.73E+09**	**3.16E+05**	**3.17E+05**	**8.77E+02**	**8.82E+02**

ATTACHMENT E

PENTAGON AREA FLOOR MICROSHIELD MODEL

MicroShield 7.02
ICP (7.02-0000)

Date	By	Checked	
Filename	**Run Date**	**Run Time**	**Duration**
TBL-194 Pentagon Area Floor.ms7	1-Jun-09	1:43:00 PM	0:00:00

Project Info	
Case Title	TBL-194
Description	Penagon Area Floor, 2.8 mR/hr average
Geometry	4 - Rectangular Area - Vertical

Source Dimensions	
Width	182.88 cm (6 ft)
Height	182.88 cm (6 ft)

Dose Points			
A	X	Y	Z
#1	30.48 cm (1 ft)	91.44 cm (3 ft)	91.44 cm (3 ft)

Shields			
Shield N	Dimension	Material	Density
Air Gap		Air	0.00122

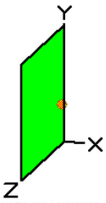

Source I r Energy

Number of Groups: 23
Lower Energy Cutoff: 0.015
Photons < 0.015: Included
Library: Grove

Nuclide	Ci	Bq	µCi/cm²	Bq/cm²
Ag-108m	4.29E-09	1.59E+02	1.28E-07	4.75E-03
Ba-133	5.29E-08	1.96E+03	1.58E-06	5.86E-02
Ba-137m	5.63E-09	2.08E+02	1.68E-07	6.23E-03
C-14	1.31E-06	4.86E+04	3.93E-05	1.45E+00
Ca-41	2.40E-10	8.89E+00	7.19E-09	2.66E-04
Cl-36	2.80E-08	1.04E+03	8.38E-07	3.10E-02
Co-60	9.18E-04	3.40E+07	2.74E-02	1.02E+03
Cs-134	2.99E-09	1.11E+02	8.93E-08	3.30E-03
Cs-135	1.56E-13	5.76E-03	4.65E-12	1.72E-07
Cs-137	5.95E-09	2.20E+02	1.78E-07	6.59E-03
Eu-152	7.04E-07	2.60E+04	2.10E-05	7.78E-01
Eu-154	7.15E-08	2.65E+03	2.14E-06	7.91E-02
Eu-155	1.17E-09	4.32E+01	3.49E-08	1.29E-03
Fe-55	2.39E-04	8.86E+06	7.16E-03	2.65E+02
H-3	2.84E-06	1.05E+05	8.50E-05	3.14E+00
Ho-166m	5.95E-09	2.20E+02	1.78E-07	6.58E-03
I-129	2.20E-15	8.14E-05	6.58E-14	2.43E-09
Mn-53	1.38E-10	5.11E+00	4.13E-09	1.53E-04
Mn-54	1.25E-09	4.61E+01	3.72E-08	1.38E-03
Mo-93	2.19E-08	8.10E+02	6.55E-07	2.42E-02
Nb-92m	4.00E-14	1.48E-03	1.20E-12	4.42E-08
Nb-94	1.50E-08	5.54E+02	4.48E-07	1.66E-02
Ni-59	8.59E-06	3.18E+05	2.57E-04	9.51E+00
Ni-63	9.73E-04	3.60E+07	2.91E-02	1.08E+03
Pb-205	6.80E-14	2.52E-03	2.03E-12	7.52E-08
Pm-145	3.44E-11	1.27E+00	1.03E-09	3.81E-05
Pu-239	1.92E-09	7.09E+01	5.73E-08	2.12E-03
Se-79	2.40E-11	8.89E-01	7.19E-10	2.66E-05
Sm-151	1.05E-08	3.89E+02	3.14E-07	1.16E-02
Sr-90	5.03E-09	1.86E+02	1.50E-07	5.57E-03
Tc-99	4.80E-09	1.77E+02	1.43E-07	5.31E-03
U-233	6.80E-11	2.52E+00	2.03E-09	7.52E-05
Y-90	5.03E-09	1.86E+02	1.50E-07	5.57E-03
Zn-65	3.44E-12	1.27E-01	1.03E-10	3.81E-06
Zr-93	1.72E-12	6.37E-02	5.15E-11	1.91E-06

Buildup: The material reference is Air Gap Integration Parameters	
Z Direction	20
Y Direction	20

Results

Energy (MeV)	Activity (Photons/sec)	Fluence Rate MeV/cm²/sec No Buildup	Fluence Rate MeV/cm²/sec With Buildup	Exposure Rate mR/hr No Buildup	Exposure Rate mR/hr With Buildup
0.0396	2.31E+04	1.68E-02	1.73E-02	7.63E-05	7.84E-05
0.1186	9.23E+03	2.03E-02	2.06E-02	3.16E-05	3.22E-05
0.1842	1.85E+02	6.30E-04	6.38E-04	1.09E-06	1.11E-06
0.2499	2.45E+03	1.14E-02	1.15E-02	2.10E-05	2.12E-05
0.3447	8.70E+03	5.57E-02	5.62E-02	1.07E-04	1.08E-04
0.4097	9.47E+02	7.21E-03	7.26E-03	1.41E-05	1.42E-05
0.4516	9.88E+02	8.29E-03	8.35E-03	1.63E-05	1.64E-05
0.5709	3.65E+02	3.88E-03	3.90E-03	7.59E-06	7.63E-06
0.6265	8.02E+02	9.34E-03	9.39E-03	1.82E-05	1.83E-05
0.6968	7.66E+03	9.94E-02	9.99E-02	1.92E-04	1.93E-04
0.7801	3.82E+03	5.55E-02	5.57E-02	1.06E-04	1.06E-04
0.8671	2.09E+03	3.37E-02	3.38E-02	6.34E-05	6.37E-05
0.9193	2.11E+02	3.61E-03	3.62E-03	6.74E-06	6.77E-06
0.9715	4.71E+03	8.52E-02	8.55E-02	1.58E-04	1.58E-04
1.0863	3.10E+03	6.27E-02	6.30E-02	1.14E-04	1.14E-04
1.1732	3.40E+07	7.42E+02	7.45E+02	1.33E+00	1.33E+00
1.2189	4.35E+02	9.88E-03	9.91E-03	1.75E-05	1.76E-05
1.2822	1.38E+03	3.31E-02	3.32E-02	5.79E-05	5.81E-05
1.3325	3.40E+07	8.43E+02	8.46E+02	1.46E+00	1.47E+00
1.4091	5.53E+03	1.45E-01	1.46E-01	2.48E-04	2.49E-04
1.5212	8.41E+01	2.39E-03	2.39E-03	4.00E-06	4.01E-06
1.5952	7.61E+01	2.26E-03	2.27E-03	3.74E-06	3.75E-06
1.8473	1.26E-05	4.35E-10	4.36E-10	6.89E-13	6.91E-13
Totals	**6.80E+07**	**1.59E+03**	**1.59E+03**	**2.79E+00**	**2.80E+00**