Document ID: EDF-5734
Revision ID: 1
Effective Date: 05/11/06

Engineering Design File

Project No. 22901

TSF-09/18 V-Tanks Remediation Transport Tie-Down Analysis

Idaho Cleanup Project

The Idaho Cleanup Project is operated for the
U.S. Department of Energy by CH2M • WG Idaho, LLC

ENGINEERING DESIGN FILE

EDF No.: 5734 EDF Rev. No.: 1 Project File No.: 22901

1. Title: TSF-09/18 V-Tanks Remediation Transport Tie-Down Analysis

2. Index Codes:
Building/Type N/A SSC ID TAN-616 Site Area TAN

3. NPH Performance Category: _____ or ☒ N/A

4. EDF Safety Category: C.G. or ☐ N/A SCC Safety Category: C.G. or ☐ N/A

5. Summary . This Engineering Design File (EDF) evaluates the transportation requirements for the three 10,000 gallon V-tanks (V-1, V-2 and V-3). Specifically, the cargo securement requirements of 49 CFR 393.102, *Federal Motor Carrier Safety Regulations*, are addressed in this EDF.

Revision 1: Revision 0 of this EDF performed the evaluation using a tank weight of 71,000 lbs. A recent assessment (EDF-6965) of the maximum weight of a tank with solidified waste is estimated at 81,200 lbs. Included in the evaluation is the addition of 4x4 timber cribbing required by the trailer manufacturer to be laid on the trailer deck to distribute the greater tank load.

Conclusions: A tiedown design was completed based on the requirements of 49 CFR 393.102 (d) Equivalent Means of Securement. This requires a minimum of nine (9) tie down straps equally spaced along each of the 20-ft long tanks. Each tiedown strap shall have a minimum Working Load Limit (WLL) of 5,000 lbs and shall meet the requirements of the Web Sling and Tiedown Association's Recommended Standard Specification for Synthetic Web Tiedowns. (WSTDA-T1, 1998). The 4-in wide straps are free at one end to all usage with the winches provided on the trailer (seven sliding winches are provided on each side with the capability of adding additional winches to the winch rails). The other ends of the straps are provided with hooks for securing to the trailer frame. Each strap will run from the trailer winch over the tank to the opposite side. All straps shall be tensioned equally to a load of not less than 2,000 lbs. When in transit, the trailers holding the tanks shall not travel at a speed in excess of 15 mph.

6. Review (R) and Approval (A) and Acceptance (Ac) Signatures:
(See instructions for definitions of terms and significance of signatures.)

	R/A	Typed Name/Organization	Signature	Date
Author	N/A	R. F. Lippert, P.E. / 9410	R F Lippert	5/11/06
Performer	N/A	S. A. Jensen, P.E. / 9410	S A Jensen	5/11/06
Technical Checker	R	D. L. Stephens, P.E. / 9410	D. L. Stephens	5/11/06
Approver	A	K. D. Fritz, P.E. / 9410	Kurt D. Fritz	5/11/06
Design Lead	Ac	M. E. Bodily / 9410	Mark E. Bodily	5/11/06
Project Engineer	Ac	D. Nickleson / 8310	D. Nickelsonby MEB	5/11/06
Doc. Control		Tara Swenson 1811	Tara Swenson	5-11-06

7. Distribution: (Name and Mail Stop)

8. Does document contain sensitive unclassified information? ☐ Yes ☒ No
If Yes, what category:

9. Can document be externally distributed? ☒ Yes ☐ No

10. Uniform File Code: 8201 Disposition Authority: A17-31-a-1
Record Retention Period: Until dismantlement or disposal of facility.

EDF No.: 5734 EDF Rev. No.: 1 Project File No.: 22901

1. Title: TSF-09/18 V-Tanks Remediation Transport Tie-Down Analysis
2. Index Codes:
   Building/Type N/A SSC ID TAN-616 Site Area TAN

equipment, system or process. or when superseded or obsolete, whichever is earlier.

11. For QA Records Classification Only: ☐ Lifetime ☐ Nonpermanent ☐ Permanent
    Item and activity to which the QA Record apply:
12. NRC related? ☐ Yes ☒ No
13. Registered Professional Engineer's Stamp (if required)

PROFESSIONAL ENGINEER REGISTERED 5629 5-11-06 STATE OF IDAHO RANDY F. LIPPERT

PROFESSIONAL ENGINEER REGISTERED 4003 5-11-06 STATE OF IDAHO SCOTT ALAN JENSEN

CONTENTS

1. PURPOSE 5

2. SCOPE 5

3. CONCLUSIONS/RESULTS 5

4. SAFETY CATEGORY 6

5. NATURAL PHENOMENA HAZARDS PERFORMANCE CATEGORY 7

6. STRUCTURE SYSTEM OR COMPONENT DESCRIPTION 7

7. DESIGN LOADS 8

8. ASSUMPTIONS 8

9. ACCEPTANCE CRITERIA 8

10. REFERENCES 10

11. SUPPORT INFORMATION 11

12. TIEDOWN ANALYSIS 15

13. TRANSPORTATION SPEED CALCULATIONS 31

This page is intentionally left blank.

TSF-09/18 V-Tanks Remediation Transport Tie-Down Analysis

1. PURPOSE

The V-Tanks remediation project will remove and treat liquid waste from four underground steel tanks and store the treated waste temporarily in consolidation tanks. The four underground tanks will be removed and the surrounding contaminated soils remediated. The waste will be pumped back into three of the 10,000 gallon V-tanks (V-1, V-2, V-3) and mixed with a solidification agent to stabilize liquid. The stabilized liquid will be consistent with a "granulized gel". Once stabilized, the tanks with contents will be transported to the INEEL CERCLA Disposal facility (ICDF) for final disposal.

2. SCOPE

This Engineering Design File (EDF) shall evaluate the transportation requirements for the three 10,000 gallon V-tanks. Specifically, the cargo securement requirements of 49 CFR 393.102, *Federal Motor Carrier Safety Regulations*, shall be addressed in this EDF. This revision of the EDF evaluates the transportation requirements based on an updated weight of the heaviest V-tank as estimated in EDF-6965. Tank V-1 is estimated to have a maximum weight of 81,200 lbs when transported to the ICDF. Also included in the evaluation is the addition of timber cribbing required by the trailer manufacturer for distributing the greater tank load on the trailer.

3. CONCLUSIONS/RESULTS

A tiedown design was completed based on the requirements of 49 CFR 393.102 (d) Equivalent Means of Securement. This requires a minimum of nine (9) tiedown straps equally spaced along each of the 20-ft long tanks. Each tiedown strap shall have a minimum Working Load Limit (WLL) of 5,000 lbs and shall meet the requirements of the Web Sling and Tiedown Association's Recommended Standard Specification for Synthetic Web Tiedowns, (WSTDA-T1, 1998). The 4-inch wide straps are free at one end for usage with the winches provided on the trailer (seven sliding winches are provided on each side with the capability of adding additional winches to the winch rails). The other end of the straps are provided with hooks for securing to the trailer frame. Each strap will run from the trailer winch over the tank to the opposite side (see Figure 1).

The cribbing design specified in EDF-5595 shall be used to support the tanks during transport. Each tank will be supported by four (4) saddles, braced together in a frame (cradle). The cradle was checked for the updated tank weight of 81,200 lbs and determined to be adequate. The cradle design was based on a tank weight of 71,000 lbs and on the need to resist lateral forces of 0.8 g forward and rearward and 0.5 g sideways. Friction pads were to be placed between the tank and support saddles to transfer lateral forces from the tank to the saddles. However, due to a plastic wrapping around the tanks for radiological control, the friction pad can not be placed directly against the tanks, reducing the lateral load transferred by friction at the tank/saddle interface. As calculated in Section 13, a speed limit is necessary for the trailers while in transit to provide restraint consistent with 49 CFR 393.102 requirements. It was determined that a

maximum speed of 15 mph will provide adequate restraint considering a reasonable and practicable braking distance of 15 feet.

Due to the greater transported weight, the manufacturer of the specified trailers has required additional cribbing to be placed on the trailer bed for distributing the load. The cribbing will consist of 4x4 timber of the same wood species as the cradle, Douglas Fir Larch-North. Friction mats, commercially available, are required between the cribbing and trailer bed to transfer forces to the trailer structure. Friction mats shall have a minimum lateral load resistance of 0.8 g.

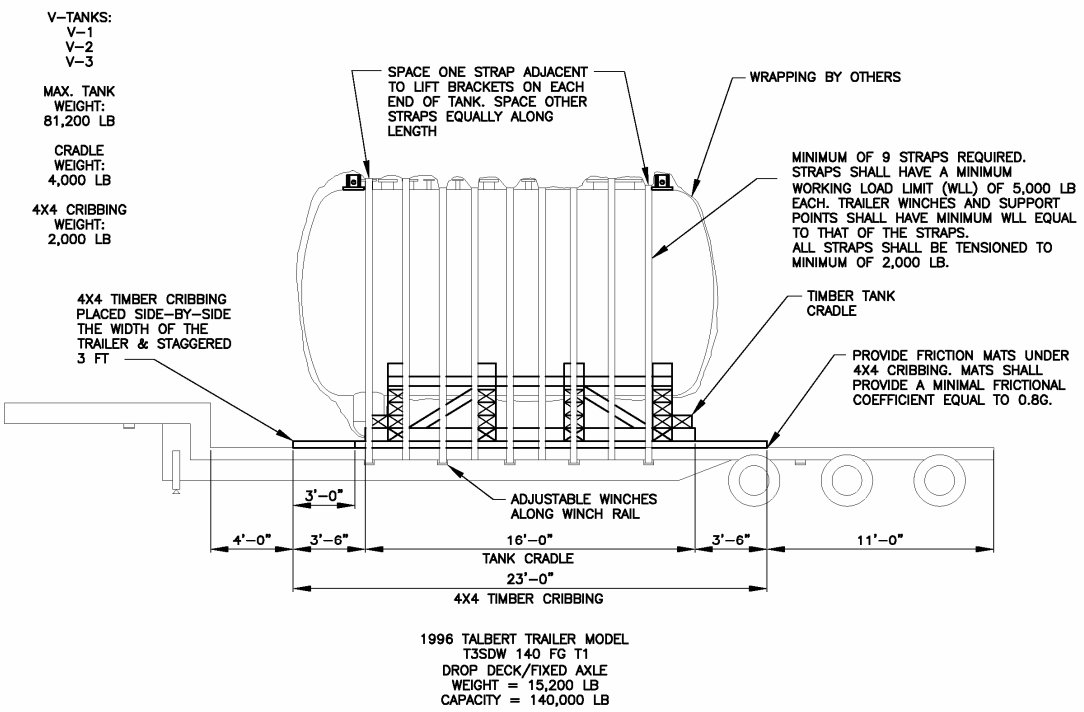

Figure 1. Transport Sketch

4. SAFETY CATEGORY

The demolition work contained in this EDF is considered "Consumer Grade", as specified in the Technical and Functional requirements document (TFR-278). All design and construction will comply with the quality requirements specified for this level of safety category.

5. NATURAL PHENOMENA HAZARDS PERFORMANCE CATEGORY

The system is classified as safety category consumer grade (CG) in accordance with the requirements of management control procedure MCP-540 titled *Documenting the Safety Category of Structures, Systems, and Components*. The safety basis for performing V-tank remedial activities is documented in the *Safety Analysis Report for Test Area North Operations* SAR-208. There are no special requirements regarding industrial or natural phenomena hazards. Normal industrial and environmental hazards will be routinely addressed per the work control process (the system performance category designation is PC 0).

6. STRUCTURE SYSTEM OR COMPONENT DESCRIPTION

The system is the temporary installation required for safely removing and treating the contents of Tanks V-1, V-2, V-3 and V-9 and preparing both the treated contents and empty tanks for disposal at the ICDF. The TAN remediation sites are known as TSF-09 (V-1, V-2, and V-3) and TSF –18 (V-9) at OU 1-10; these four tanks are commonly referred to as the V-tanks. The remediation is being conducted in accordance with the *Final Record of Decision for Test Area North, Operable Unit 1-10* (DOE-ID 1999) referred to as the ROD, and any appropriate amendments. Tanks V-1, V-2, and V-3 are identical stainless steel 10,000 gallon tanks 10 ft in diameter with a nominal 20 ft length, and located approximately 11 ft below grade. Since the release of Revision 0 of this EDF, tanks V-1, V-2 and V-3 have been removed from their buried locations.

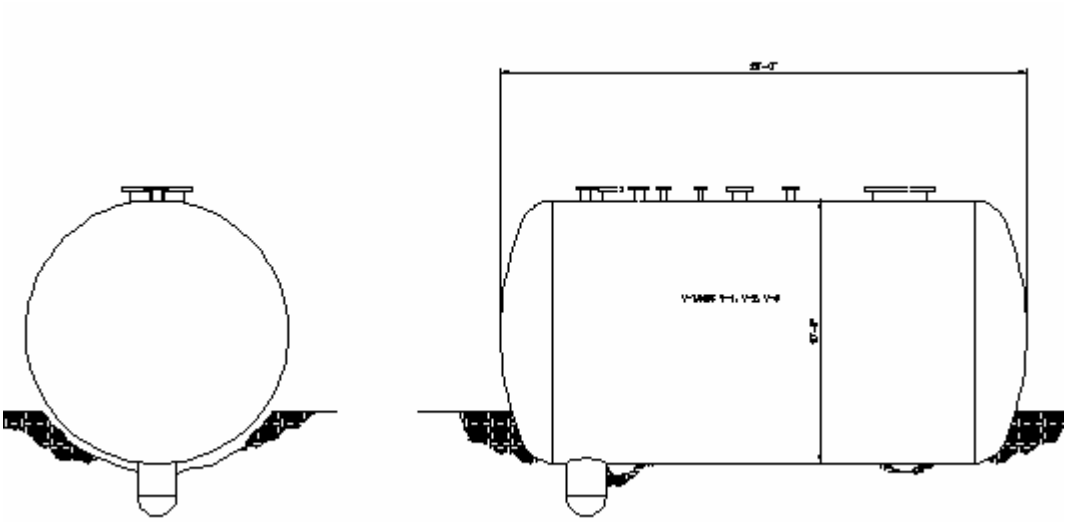

V-Tank Elevation

7. DESIGN LOADS

The tank weight is based on estimated volume and weight of solidified waste and measured tank weight when tanks were extracted from their original, buried locations. See EDF-6965 for the tank weight estimate. Tank V-1 is estimated to have a maximum weight of 81,200 lbs.

Also to be considered in the transportation evaluation is the additional weight of timber cribbing required by the trailer manufacturer to distribute the tank and cradle load.

8. ASSUMPTIONS

The transport trailers were selected based on the assumption that they meet the minimum requirements for transport vehicles as specified by the ICP Packaging and Transportation Department. The trailers are 1996 Talbert Model T3SDW 140 FG T1, drop deck/fixed axle with sliding winches on both sides. Evaluation of the trailers is not included in this EDF. It is assumed that additional winches can be added to the winch rails.

9. ACCEPTANCE CRITERIA

The transport evaluation shall be based on the tie-down requirements from the applicable sections of *49 CFR 393.102 Minimum Performance Criteria for Cargo Securement Devices and Systems*. Requirements for packaging, transporter and trailer, and transport plan and controls are not included in this evaluation.

49 CFR 393.102 Minimum Performance Criteria for Cargo Securement Devices and Systems:

49 CFR 393.102 (d) Equivalent Means of Securement: Cargo that is immobilized, or secured in accordance with the applicable requirements of 49 CFR 393.104 through 393.136 is considered as meeting the performance requirements of 393.102.

49 CFR 393.104 (a) General. (for information only)
All devices and systems used to secure cargo to or within a vehicle must be capable of meeting the requirements of 393.102.
(b) Prohibition on the use of damaged securement devices.
(c) Vehicle structures, floors, walls, decks, and tie-down anchor points and associated mounting pockets must be strong enough to meet the requirements of 393.102.
(d) Material for dunnage, chocks, cradles, shoring blocking and bracing . Materials used for dunnage, chocks, cradles, shoring blocking and bracing must not be damaged.
(e) Manufacturing standards for tie-down assemblies. Tie-down assemblies and other attachment or fastening devices used to secure articles of cargo to , or in commercial motor vehicles must conform to the following applicable standards:

Webbing: Web Sling and Tiedown Association's Recommended Standard Specification for Synthetic Web Tiedowns. (WSTDA-T1, 1998)

49 CFR 393.106 General Requirements for securing articles of cargo. (a) The rules of this section are applicable to the transportation of all types of articles of cargo, except commodities in bulk that lack structure or fixed shape and are transported in a tank, hopper or box that forms a part of the structure (fixed) of a commercial vehicle.

(b) General. Cargo must be firmly immobilized or secured on, or within a vehicle by structures of adequate strength, dunnage or dunnage bags, shoring, tie downs or a combination of these.

(c) Cargo placement and restraint.

(1) Articles of cargo that are likely to roll must be restrained by chocks, wedges, a cradle or other equivalent means to prevent rolling. The means of preventing rolling must not be capable of becoming unintentionally unfastened or loose while in transit.

(d) Minimum strength of cargo securement devices and systems. The aggregate working load limit of any securement system used to secure an article or group of articles against movement must be at least one-half times the weight of the article or group. The aggregate working load limit is the sum of:

(1) One-half of the working load limits of each associated connector or attachment mechanism used to secure a part of the article of cargo to the vehicle.

(2) One-half of the working load limit for each end section of a tie-down that is attached to an anchor point

49 CFR 393.108 Determination of Working Load Limit. (a) The working load limit (WLL) of a tie-down, associated connector or attachment mechanism is the lowest working load limit of any of its components, or the anchor points to which it is attached. (b) The working load limit of tie-downs may be determined by using either the tie-down manufacturer's markings or tables in this section.

49 CFR 393.110 (a) in addition to the requirements of 393.106, the minimum number of tie-downs required to secure an article or group of articles against movement depends on the length of the article being secured, and paragraphs (b) and (c).
(b) When an article is not blocked or positioned to prevent movement in the forward direction by a headerboard, bulkhead, or other cargo that is positioned to prevent movement, or other appropriate blocking devices, it must be secured by at least:

(1) One tie-down for articles 5 feet or less in length, and 1100 pounds or less in weight.
(2) two tie-downs if the article is :

(i) 5-feet or less in length and more than 1100 pounds; or

(ii) Longer than 5-ft but less than or equal to 10-feet in length, irrespective of the weight,

(3) two tie-downs if the article is longer than 10-feet, and one additional tie-down for every 10-feet of article length and fraction thereof beyond the first 10-feet.

10. REFERENCES

- Technical and Function Requirements (TFR-278) *T&FR for the Remediation of V-Tanks, TSF-09 and TSF-18, Operable Unit 1-10.*
- Safety Analysis Report for Test Area North Operations, SAR-208.
- 49 CFR 393.100, Code of Federal Regulations, Federal Motor carrier Safety Administration, 9/27/02.
- EDF-5595, TS-09/18 V Tanks Remediation Tank Lifting Design, P. W. Bragassa, 4/18/05.
- EDF-6965, Estimated Filled Weights for V-1, V-2, and V-3, Containing Solidified V-tank Waste, Rick Farnsworth, May 4, 2006.
- AISC, American Institute of Steel Construction, Manual of Steel Construction, Allowable Stress Design.
- ANSI/AF&PA NDS-2005, National Design Specifications for Wood Construction ASD/LRFD.
- Marks' Standard Handbook for Mechanical Engineers, Tenth Edition.

11. SUPPORT INFORMATION

This page is intentionally left blank

Lippert, Randy F

From: Bodily, Mark E
Sent: Wednesday, May 10, 2006 4:58 PM
To: Lippert, Randy F
Subject: FW: Movements on 2389 series trailer

FYI

From: Jessmore, James J
Sent: Thursday, May 04, 2006 5:32 PM
To: Bodily, Mark E; Stephens, David L; Van Sickle, Mark E
Cc: Nickelson, Dave; Jantz, Allen E; Haley, Daniel J
Subject: FW: Movements on 2389 series trailer

Gentlemen:the following information was submitted from the TriState vendor as I requested in our meeting yesterday. Please use this as a reference in your pending EDF/Design revisions.

Mark please communicate with Mark Van Sickle and Don Petersen to insure there is clear understanding as to where all revisions and direction for rigging and transport will reside. My understanding is that all information and calcs will reside in EDF-5734. Any changes in rigging requirements need to be captured in an FDC to our current designs as well as EDFs are not the source for such requirements.

On another note. I've been inquiring about our transport of V-9 in our new configuration in the AMCOR HIC. I've been informed by P&T that EDF-3798 will suffice for rigging and transport of this container. I need you two entities to concur and provide me with specifics on this shipment and subsequently identify required trucking equipment and verify the availability of identify tie down materials for this shipment as well.

Jim

From: Gary O'Dell [mailto:gary.odell@tsmtco.com]
Sent: Thursday, May 04, 2006 9:46 AM
To: Jessmore, James J; Ron Lorenz; stuart.wilcken@tsmtco.com; james.miller@tsmtco.com
Subject: Movements on 2389 series trailer

Jim
Per our phone conversation this is a followup on the proper placement of the load on the 2389 series trailer. Based on a net weight of 84,000 lbs in 16' of space we would need a minimun of four rows of 4x4 timers, at least 20' in length, running front to back on the trailer. With one being on the edge on each side of the trailer and then the remaining two spaced on the interior of the trailer. The 4x4's need to be placed back 4' from the step and the load centered then on the 4x4's.
If you need addtional information please let me know.
Thanks

Lippert, Randy F

From: Bodily, Mark E
Sent: Tuesday, May 09, 2006 9:27 AM
To: Lippert, Randy F
Subject: FW: V-Tanks V-1 thru 3 Cribbing support

fyi

From: Bodily, Mark E
Sent: Tuesday, May 09, 2006 9:01 AM
To: Sloan, Paul A; Petersen, Don M
Cc: Sloan, Lyle D; Jessmore, James J; Nickelson, Dave
Subject: RE: V-Tanks V-1 thru 3 Cribbing support

Paul,
Engineering concurs with this approach. It is consistent with the recommendations we received from Tri-State, as well as applicable portions of V-Tank design documents.

Mark E. Bodily
CWI Engineering
Design Engineering
208-526-9102
208-520-1138
meb2@inel.gov

From: Sloan, Paul A
Sent: Tuesday, May 09, 2006 8:51 AM
To: Bodily, Mark E; Petersen, Don M
Cc: Sloan, Lyle D; Jessmore, James J; Nickelson, Dave
Subject: V-Tanks V-1 thru 3 Cribbing support

Mark/Don,

Based on earlier conversations with you and Tri-State, I intend to have maintenance proceed with upgrades to the cribbing for V-Tanks V-1 thru 3 as indicated below. I need your concurrence to proceed at risk prior to your supporting EDF release in order to accomplish the work in a timely manner.

We will place friction pad material on the trailers under the central 8 X 20f-ft area that will be directly under the tank cribbing. On top of the friction pad we will place 56 additional 4X4s in 28 rows for full support under the tank cribbing on the trailer. The first two 4X4s will be placed in line so that the first one is 4-ft from the drop deck end of the trailer, with the second 4X4 extending beyond the end of the first 4X4 for a total length of 20-ft. The next row of 4X4s will start 7-ft from the end of the drop deck and extend for a total length of 20-ft. We will keep alternating rows until all 28 rows of 4X4s are placed on each trailer. The 4X4s will be banded together after they are placed. The tank cribbing will then be placed on the 4x4 platform centered on the center of the 23-ft alternating row platform.

If you agree the above statement assembles the cribbing appropriately, and that it is appropriate to proceed at risk with the assembly as stated, please respond to this note to let me know of you concurrence.

Thanks,

Paul Sloan

12. TIEDOWN ANALYSIS

This page is intentionally left blank

TAN V-Tanks Tie Down Calculations

Dimensional Definitions:

$pcf \equiv \frac{lbf}{ft^3}$ $plf \equiv \frac{lbf}{ft}$ $psf \equiv \frac{lbf}{ft^2}$ $kip \equiv 1000 \cdot lbf$ (lbf = pound-force)

$ksi \equiv \frac{kip}{in^2}$ $pli := \frac{lbf}{in}$ $sf := ft^2$ $psi := \frac{lbf}{in^2}$

Weights:

Max. weight of V-Tank and contents (from EDF-6965): $tank := 81200lbf$

V-1 tank weight with solidified waste

Tank cradle weight (from EDF-5595): $cradle := 4000lbf$

Plastic tank wrap weight, estimated: $wrap := 200 \cdot lbf$

Tank Length: 20-ft overall (nominal): $length := 20ft$

4x4 timber cribbing for trailer deck: see attached email note, 56 4x4 timbers to be used on deck of trailer to distribute tank load; each timber is 10 ft long; assume timber density of 34 pcf

$56 \cdot (3.5 \cdot in)^2 \cdot 10 \cdot ft \cdot 34 \cdot pcf = 1620\ lbf$

use $cribbing := 2000 \cdot lbf$

Tank Tie-Down/Securement Criteria:

The Packaging and Transportation Transport Plan has identified that 49 CFR 393.104 through 3931.36 will be utilized for the V-tank shipments. To accomplish these tie-down requirements, the following will be used:

Nylon/poly straps were selected by Packaging and Transportation to be used for securing the tanks. The 4" wide straps are free at one end to all usage with the winches provided on the trailer (assuming five sliding winches are provided on each side and additional winches can be added). The other end of the straps are provided with hooks for securing to the trailer frame. Each strap will run from the trailer winch over the tank to the opposite side. The weakest component (strap, winch, anchor point, etc.) of the tiedown shall have a working load limit (WLL) of not less than 5,000 lbf.

$WLL := 5000 \cdot lbf$

The minimum strength of the cargo securement devices and system per 49 CFR 393.106 (d) shall be at least 1/2 times the weight of the article or group.

Total restrained weight: Tank + contents + cradle + cribbing + wrapping

$Wtotal := tank + cradle + cribbing + wrap$ $\qquad Wtotal = 87400\,lbf$

one-half of restrained weight: $\qquad W_{half} := 0.5 \cdot Wtotal$

The minimum number of straps required:

$\frac{W_{half}}{WLL} = 8.74$ therefore, if 9 straps minimum are used, the criteria is met, $\qquad N := 9$

Strap Requirements: Since the nominal tank length is 20-ft, the minimum strap requirement from 49 CFR 393.110 is

1 tie-down for the first 10-ft, and 1 for every 10-ft of length beyond

therefore:

minimum 2 tie downs required for 20-ft tank, however the minimum load requirements dictate that a minimum of nine are required.

Web straps shall meet the requirements of the Web Sling and Tiedown Association's Recommended Standard Specification for Synthetic Web Tiedowns (WSTDA-T1, 1998)

Straps shall have a minimum working Load Limit (WLL) of 5,000 lbs, each.

Transport Trailer Specifications:

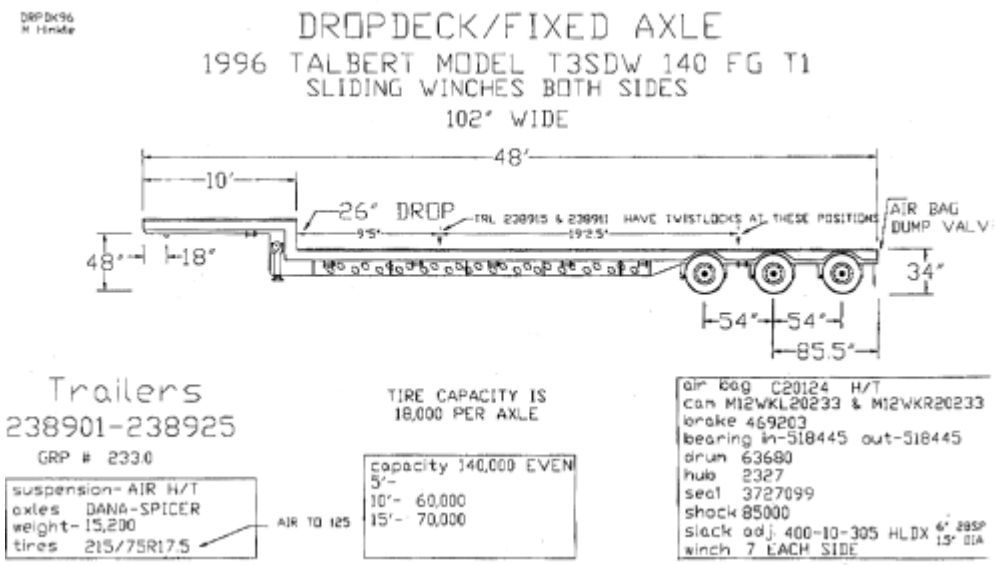

Tank Cribbing (Cradle) Design:

The cradle design was performed in EDF-5595 and parts are included here to check design for the greater tank weight.

Cradle is designed to support tanks V-1, 2, 3 on the transport trailer. Tanks shall be assumed to be fully loaded with the solidified material. Seismic and wind will be ignored, since the tanks will be tied down while on the trailer.

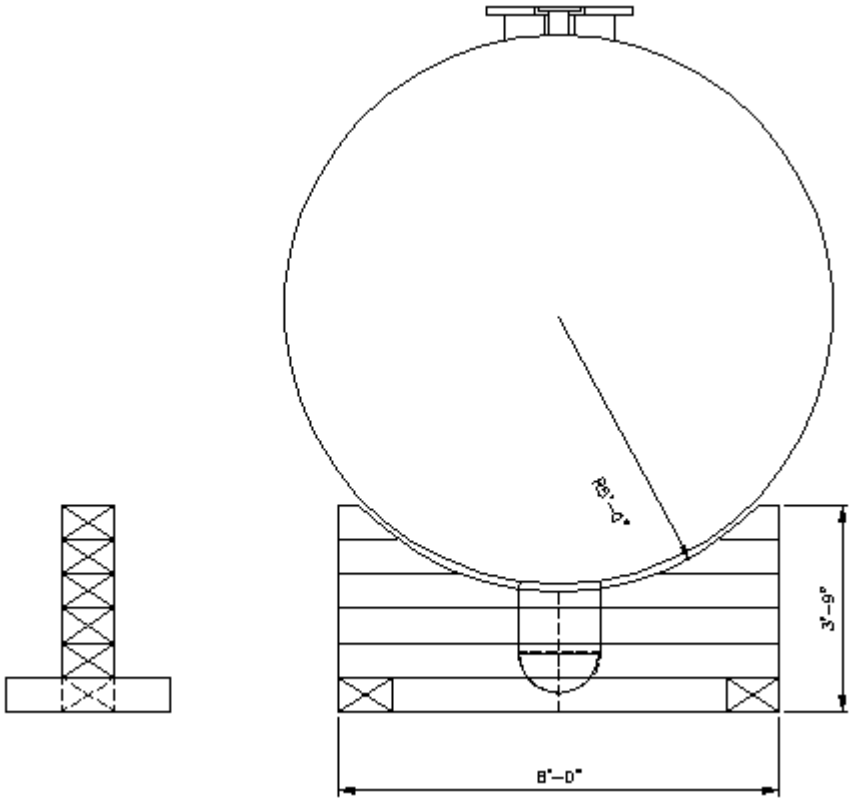

Weight of tank with contents: weight := tank + wrap weight = 81400 lbf

Cradles are constructed from 8x12 nominal Douglas Fir Larch-North timbers, and the length of each saddle is limited to 8' due to the maximum trailer width.

The actual dimensions for 8x12 timber is: 7.5" x 11.5"

Using a beam distribution with four supports to determine the reaction at each saddle:

if a 14ft dimension is assumed as an overall length and even spacing then

$w := \frac{weight}{14ft}$ $\quad sp := \frac{14ft}{3}$

each end support load $\quad R1 := \frac{4 \cdot w \cdot sp}{10}$ $\quad R1 = 10853\,lbf$

each interior support $\quad R2 := \frac{11 \cdot w \cdot sp}{10}$ $\quad R2 = 29847\,lbf$

Timber capacities: Douglas Fir Larch-North has a bearing compression design value of 625 psi for compression perpendicular to the grain.

$fc := 625psi$

arc length supporting tanks approximately 8.166 ft from autocad model: $\quad Lr := 8.166 \cdot ft$

allowable load per foot $\quad F := 625psi \cdot 7.5in \cdot 12in$ $\quad F = 56250\ lbf$

bearing surface area $\quad A_b := 7.5in \cdot Lr$ $\quad A_b = 5.104\ ft^2$

Compressive force on cradle assuming tank weight on 2 saddles:

$Fc := \frac{weight}{2 \cdot A_b}$ $\quad Fc = 55.379\,psi$ $\quad$ Ok, timbers will not crush

$DC := \frac{Fc}{fc}$ $\quad DC = 0.089$

Cradle Saddle Connections:

Long threaded rods are used to tie the timbers together

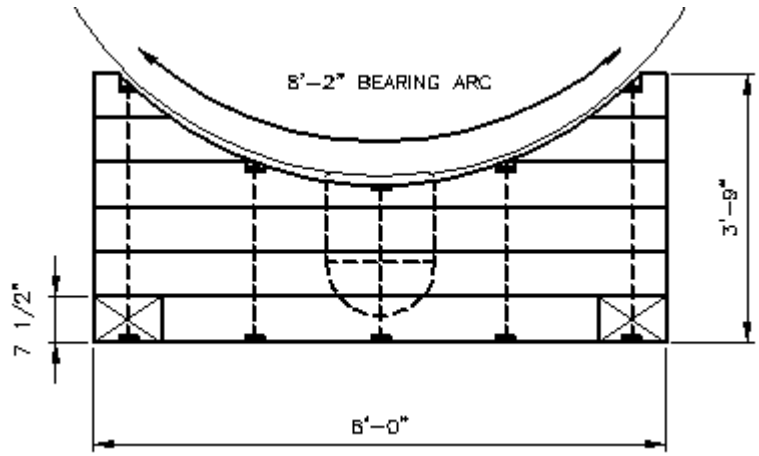

Five (5) 3/4 inch A36 threaded rods are used to tie the 8x12 timbers of each saddle together, so the total shearing strength of the assembly is:

AISC Table 1-D for A307 rod, 3/4-inch $Fv := 4400\text{lbf}$ $5 \cdot Fv = 22000\,\text{lbf}$ per saddle

The sideways and rearward force requirement for cargo securement systems of 49 CFR 393.102 is 0.5g, and 0.8g for forward, but due to the plastic wrapping around the tank, longitudinal load transferred from the tank to the cradle is approximately 0.5g as calculated in Section 13 of this EDF. The tanks will be secured with tiedowns, but check shear capability of saddles only. Check the bolts neglecting friction between timbers:

all lateral directions: $f_f := R2 \cdot 0.5$ $f_f = 14923\ \text{lbf}$

per saddle < 22,000 lbf so ok bolts are capable of resisting shear.

max DC $\dfrac{f_f}{22000 \cdot \text{lbf}} = 0.678$

Check Bearing Force at bolts on timbers:

Bearing on timbers: Ref ANSI/NFPA NDS National Design Standard, Section 11.3.1 single shear connections. The bearing forces from bolts on timbers:

$$\frac{f_f}{5} = 2985\,\text{lbf}$$

Table 11.3.2 Dowel Bearing Strength: for bearing strength parallel to grain for DFL-n,

fe=5500 psi

Equation 11.3-1 for yield mode Im (bearing dominate yield of wood fibers)

$$Z := \frac{D \cdot tm \cdot Fem}{4 \cdot K}$$

$D := .75in$ (bolt diam)

$tm := 7.5in$ (thickness of 8x12)

$Fem := 2500psi$ (dowel bearing strength perpendicular)

$K := 1$ (no angle, direct shear)

$$Z := \frac{D \cdot tm \cdot Fem}{4 \cdot K}$$ $Z = 3516\,lbf$ (allowable shear values at bolt holes > 2985 lbf) ok

Shear Between timbers due to radial loading:

the interior saddles reaction $R2 = 29847\,lbf$

the radial dimension of the bearing area determined from autocad model $Lr = 8.166\ ft$

force per foot $W := \frac{R2}{Lr}$ $W = 3655\,plf$

horizontal shear component, worst angle at approx 50 degrees near top of saddle; this angle drops significantly towards the bottom of the tank

$v := \cos(39deg) \cdot W$ $v = 2840\,plf$

vertical component $y := \sin(39deg) \cdot W$ $y = 2300\,plf$

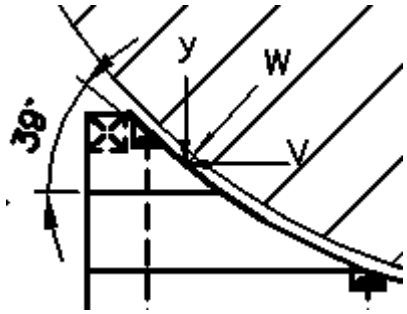

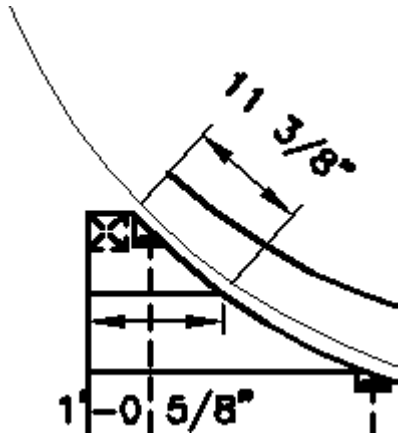

friction coef for wood on wood is 0.35 (Modern College Physics, 6th ed H.E. White pg 118)

friction force between timbers $\quad fric := 0.35 \cdot y \quad fric = 805\,plf$

At top timber: total lateral force $\quad v_t := v \cdot 11.375in \quad v_t = 2693\ lbf$

friction resistance $\quad f_r := fric \cdot 1 \cdot ft \quad f_r = 805\ lbf$

rod shear strength $\quad Fv = 4400\ lbf$

$$DC := \frac{v_t - f_r}{4400lbf} \qquad DC = 0.429 \qquad ok$$

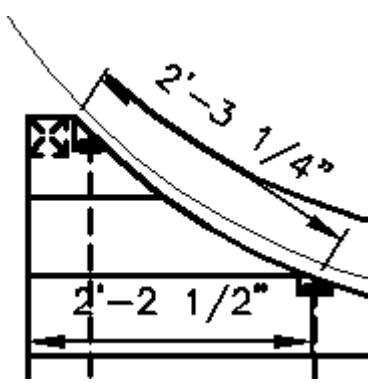

second section: lateral force $\quad v_t := v \cdot 2.25ft$

friction $\quad f_r := fric \cdot 2.25ft$

$$DC := \frac{v_t - f_r}{4400lbf} \qquad DC = 1.041$$

OK since conservatively used horizontal angle of 39 deg instead of reduced angle of approximately 30 deg

Longitudinal Bracing:

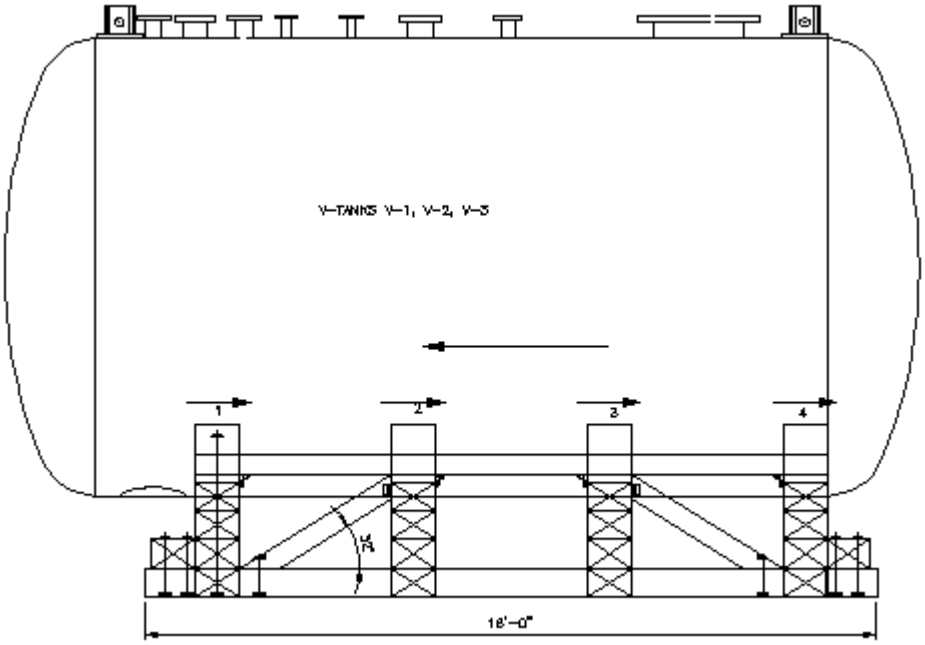

Lateral Force: Due to the plastic wrapping around the tank, longitudinal load transferred from the tank to the cradle is approximately 0.5g as calculated in Section 13 of this EDF.

$Plat := weight \cdot 0.5$ $\quad Plat = 40700\,lbf$

This force is less than the 56,800 lb used in EDF-5595 for the design of the braces, so the braces are adequate.

Check Stability of Transport Trailer:

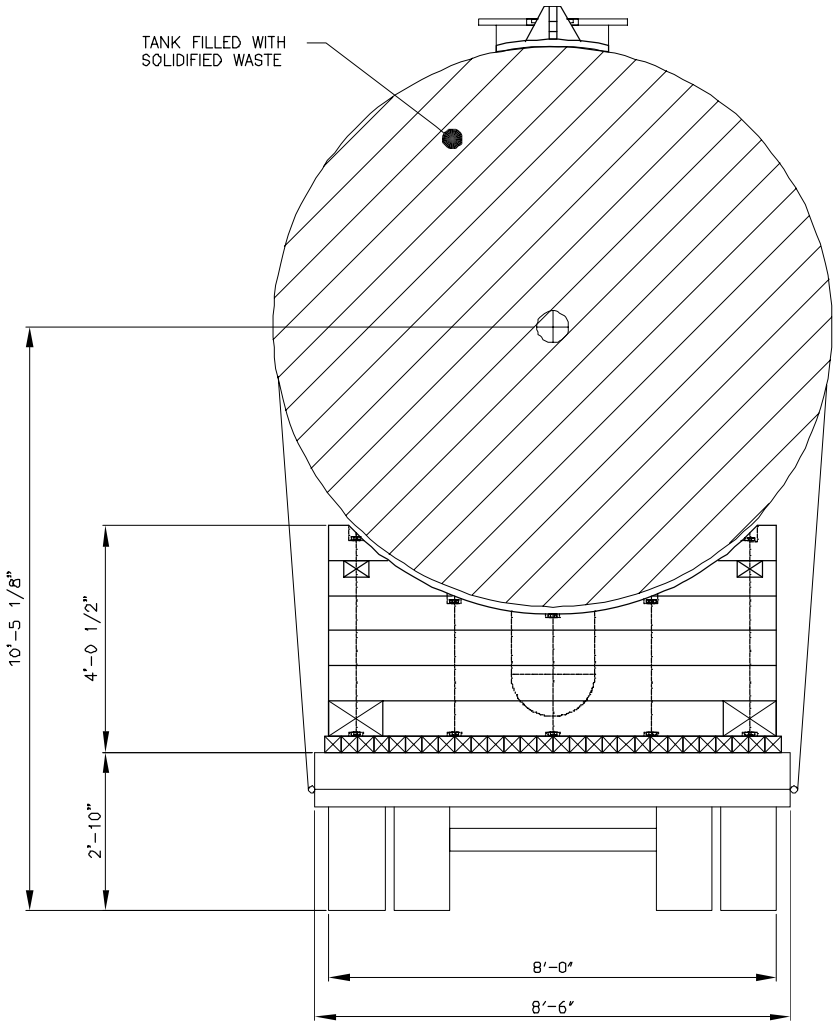

Vertical Forces:	tank weight	tank = 81200 lbf
	cradle weight	cradle = 4000 lbf
	cribbing weight	cribbing = 2000 lbf
	trailer weight	trailer := 15200·lbf

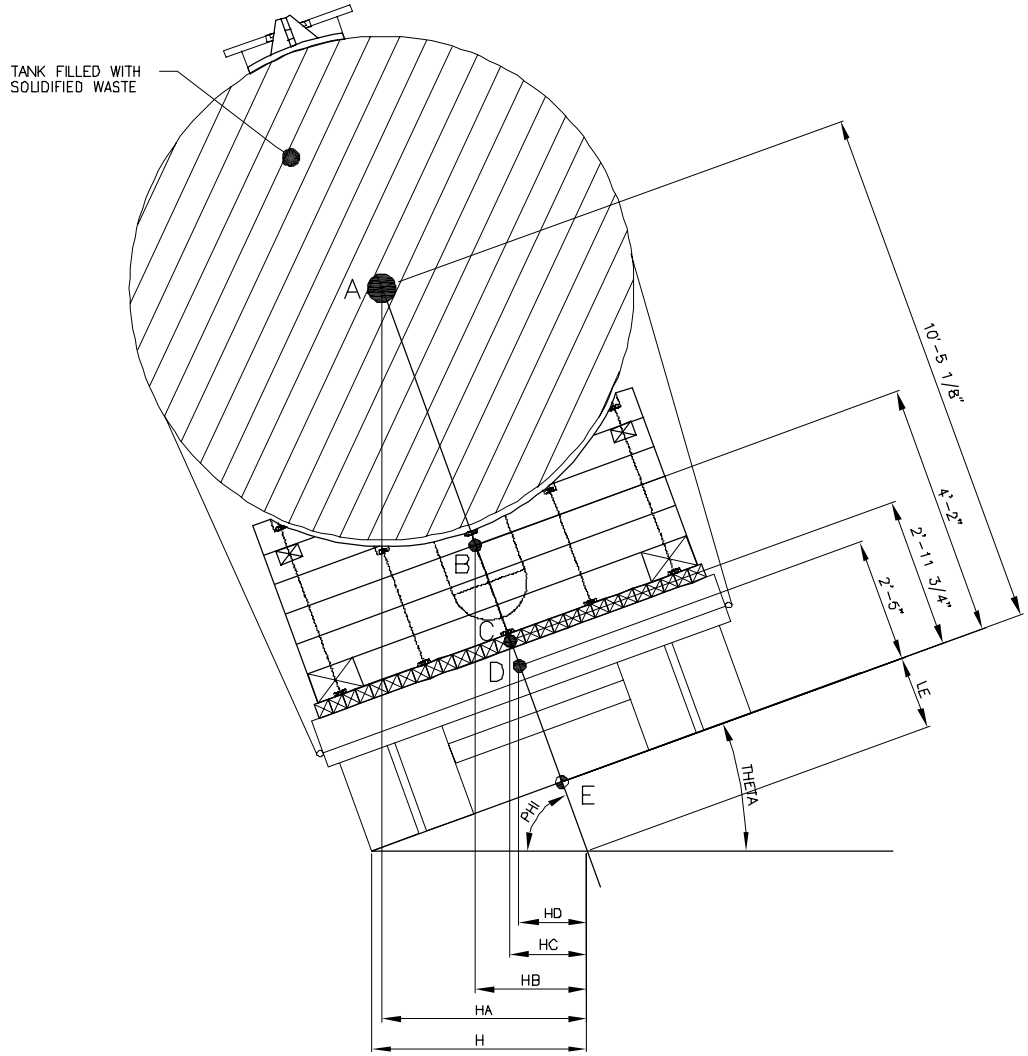

$R_A :=$ tank $\quad R_B :=$ cradle $\quad R_C :=$ cribbing $\quad R_D :=$ trailer

$L_A := 10.42\text{ft} \quad L_B := 4.12\text{ft} \quad L_C := 3\text{ft} \quad L_D := 2.42 \cdot \text{ft}$

$\theta := 24.3\text{deg} \quad \phi := 90\text{deg} - \theta \quad L_E := 4\text{ft} \cdot \tan(\theta) \quad H := \dfrac{4\text{ft}}{\cos(\theta)} \quad H = 4.389\text{ ft}$

$H_A := (L_A + L_E) \cdot \cos(\phi) \quad H_A = 5.031\text{ ft}$

$H_B := (L_B + L_E) \cdot \cos(\phi) \quad H_B = 2.439\text{ ft}$

$H_C := (L_C + L_E) \cdot \cos(\phi) \quad H_C = 1.978\text{ ft}$

$H_D := (L_D + L_E) \cdot \cos(\phi) \quad H_D = 1.739\text{ ft}$

$x_A := H - H_A$ $\quad x_B := H - H_B$ $\quad x_C := H - H_C$ $\quad x_D := H - H_D$

$M_A := x_A \cdot R_A$ $\quad M_B := x_B \cdot R_B$ $\quad M_C := x_C \cdot R_C$ $\quad M_D := x_D \cdot R_D$

$M := M_A + M_B + M_C + M_D$ $\quad M = 739\,ft \cdot lbf$

The trailer will not tip as long as the sum of the moments, M, is positive.

A tip angle of 24 degrees is shown to be the maximum angle before tip over, but this allows the tank CG to move past the outside tire of the trailer; a safer estimate of the tip angle should be based on the tank CG remaining inside of the trailer tires:

$\theta := 20deg$ $\quad \phi := 90deg - \theta$ $\quad L_E := 4ft \cdot \tan(\theta)$ $\quad H := \frac{4ft}{\cos(\theta)}$ $\quad H = 4.257\ ft$

$H_A := (L_A + L_E) \cdot \cos(\phi)$ $\quad H_A = 4.062\ ft$

A tip angle of 20 degrees maintains the tank CG within the trailer's outside tires.

Transport Design Summary:

Each tank will be supported by (4) saddles (cradles), braced together in a cradle. The cradle is capable of supporting the updated tank weight of 81,400 lbs. The cradle was designed to resist lateral forces of 0.8 g forward and rearward and 0.5 g sideways. Friction pads will be placed between the cribbing and trailer bed to transfer lateral forces of the transported load to the trailer structure. Due to the plastic wrapping around the tank, a 0.8 g force can not be transferred from the tank to the cradle. Section 13 indicates that the maximum transferable force is approximately 0.5 g.

Stability: The tanks loaded on the trailers will be be stable up to an angle of 20 degrees. Since the crown (grade) of the roadways is less than 5 degrees, a margin of safety is provided that is reasonable.

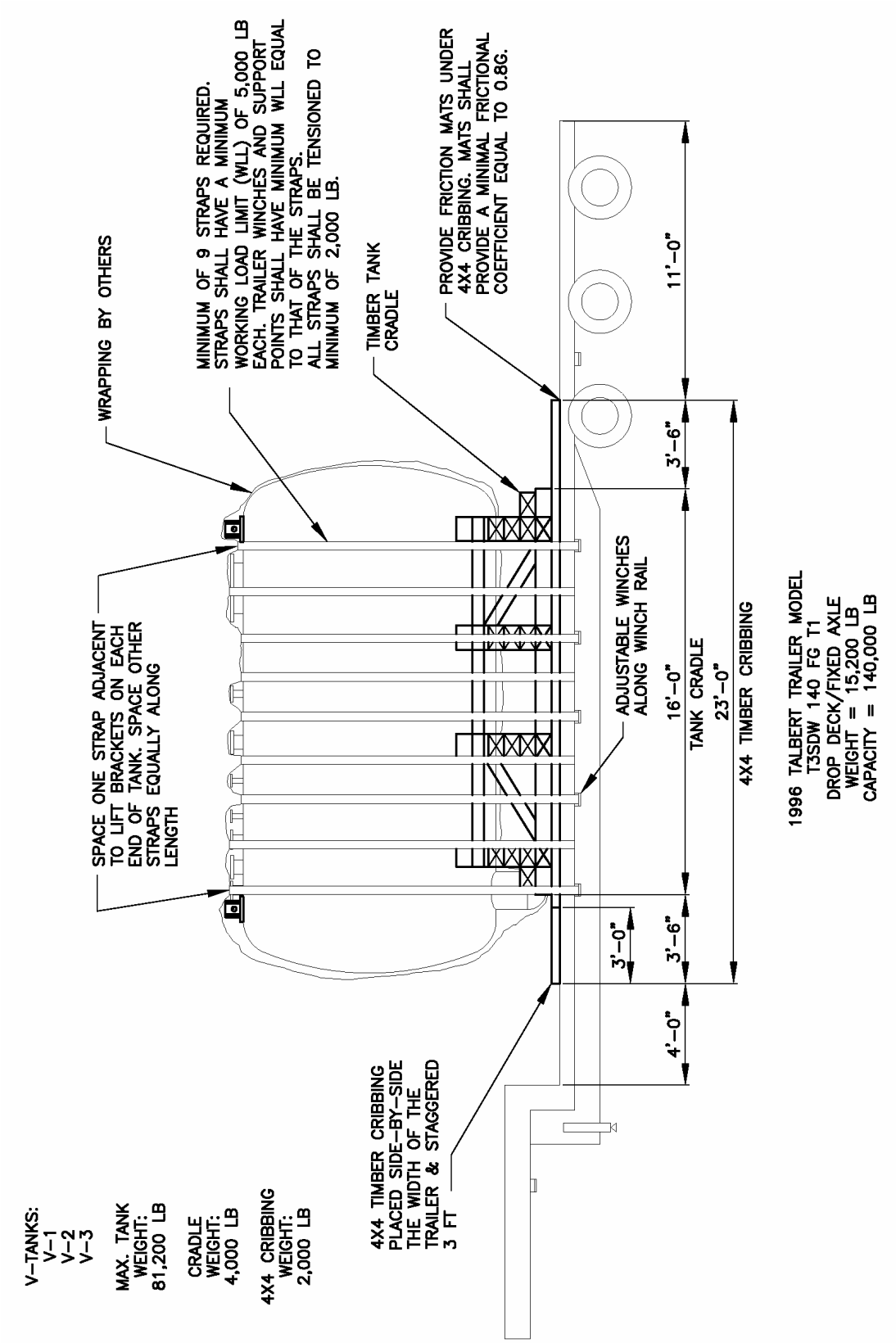
WRAPPING BY OTHERS
MINIMUM OF 9 STRAPS REQUIRED. STRAPS SHALL HAVE A MINIMUM WORKING LOAD LIMIT (WLL) OF 5,000 LB EACH. TRAILER WINCHES AND SUPPORT POINTS SHALL HAVE MINIMUM WLL EQUAL TO THAT OF THE STRAPS. ALL STRAPS SHALL BE TENSIONED TO MINIMUM OF 2,000 LB.
TIMBER TANK CRADLE
PROVIDE FRICTION MATS UNDER 4X4 CRIBBING. MATS SHALL PROVIDE A MINIMAL FRICTIONAL COEFFICIENT EQUAL TO 0.8G.
SPACE ONE STRAP ADJACENT TO LIFT BRACKETS ON EACH END OF TANK. SPACE OTHER STRAPS EQUALLY ALONG LENGTH
ADJUSTABLE WINCHES ALONG WINCH RAIL
11'-0"
3'-6"
16'-0"
TANK CRADLE
23'-0"
4X4 TIMBER CRIBBING
3'-0"
3'-6"
4'-0"
4X4 TIMBER CRIBBING PLACED SIDE-BY-SIDE THE WIDTH OF THE TRAILER & STAGGERED 3 FT
V-TANKS:
V-1
V-2
V-3
MAX. TANK WEIGHT: 81,200 LB
CRADLE WEIGHT: 4,000 LB
4X4 CRIBBING WEIGHT: 2,000 LB
1996 TALBERT TRAILER MODEL
T3SDW 140 FG T1
DROP DECK/FIXED AXLE
WEIGHT = 15,200 LB
CAPACITY = 140,000 LB

This page is intentionally left blank

13. TRANSPORTATION SPEED CALCULATIONS

By S. A. Jensen

This page is intentionally left blank

V-Tanks Tie-Down Strapping and Travel Limitation (Speed) Calculations

Weights of Tank and Shipping Components:

Filled Tank - $W_{tank} := 81200\,lbf$

Cribbing and Timbers - $W_{timbers} := 8900\,lbf$

Miscellaneous, plastic - $W_{misc} := 200\,lbf$

$W_{tot} := W_{tank} + W_{timbers} + W_{misc}$ $\qquad W_{tot} = 90.3kip$

Calculate the number of straps necessary to meet 393.106 requirements assuming the allowable working load is 5,000 lbs:

$$\frac{1}{2}\cdot W_{tot}\cdot\frac{1}{5000\,lbf} = 9$$

Assuming a friction coefficient of 0.4 for plastic on steel calculate the horizontal load that can be resisted by the tie-down system if the straps are tightened to 2000 lbs tension at each tie-down point. See Table 3.2.6 in Mark's Handbook for source of the friction coefficient (steel on low-density polyethylene). First calculate the vertical component of the 2000 lb tension based on the strap configuration.

Height of tangent line of the straps above the tie-down point:

$3.5\cdot 7.5\cdot in + 3.5\cdot in + 5\cdot ft + 1\cdot ft = 8.479\,ft$ $\qquad$ say 8.5 ft

Horizontal distance from tangent line to tie-down point:

$$5\cdot ft - \frac{8.5\cdot ft}{2} = 0.75\,ft$$

Vertical force: $V_f := 2000\,lbf\cdot\dfrac{8.5\cdot ft}{\sqrt{(8.5\cdot ft)^2 + (0.75\cdot ft)^2}}$ $\qquad V_f = 1.992kip$

Total normal force: $N_f := 9\cdot 2\cdot V_f + W_{tank}$ $\qquad N_f = 117.1kip$

Friction force: $F_f := 0.4\cdot N_f$ $\qquad F_f = 46.8kip$

$$\frac{F_f}{W_{tank}} = 0.577$$

Approximately 0.5 g's of force in the longitudinal direction can be resisted from the frictional force due to the tie-downs and the weight. However, 49 CFR 393.102 states that 0.8 g's of force must me resisted. Since the resisting force is too low, the vehicle is considered a special vehicle and speed reduction will be utilized to reduce the friction force requirement to 0.5 g's or less.

The other parts of the shipping system (cribbing, truck bed, etc.) have higher coefficients of friction or are provided with friction mats. The normal forces are also higher due to the additional weight. Based on these considerations the governing resistance force in the tie-down system is the previously calculated friction force. Use 0.5 x the filled tank weight as the working frictional force which must be greater than the mass of the filled tank x the deceleration.

Calculate the maximum allowable travel speed for the truck and trailer based on several stopping distances. Use conservation of energy to calculate the speed (kinetic energy must equal the work done in stopping). Assume constant braking deceleration. Also, assume that deceleration (braking) creates larger forces than the truck acceleration.

$i := 1, 2 .. 8$ $\quad d_i := i \cdot 5 \cdot ft$ $\quad g = 32.174 \frac{ft}{s^2}$

$i =$

1
2
3
4
5
6
7
8

$$Vel_i := \sqrt{2 \cdot \frac{g}{W_{tank}} \cdot 0.5 \cdot W_{tank} \cdot d_i}$$

$$d = \begin{pmatrix} 0 \\ 5 \\ 10 \\ 15 \\ 20 \\ 25 \\ 30 \\ 35 \\ 40 \end{pmatrix} ft \qquad Vel = \begin{pmatrix} 0 \\ 12.7 \\ 17.9 \\ 22 \\ 25.4 \\ 28.4 \\ 31.1 \\ 33.6 \\ 35.9 \end{pmatrix} \frac{ft}{s} \qquad Vel = \begin{pmatrix} 0 \\ 9 \\ 12 \\ 15 \\ 17 \\ 19 \\ 21 \\ 23 \\ 24 \end{pmatrix} mph$$

Calculate deceleration values in fractions of gravity for 15 mph and various stopping distances:

$Velocity := 15 \cdot mph$

$$decel_i := \frac{W_{tank} \cdot Velocity^2}{2 \cdot g \cdot W_{tank} \cdot d_i}$$

$$decel = \begin{pmatrix} 0 \\ 1.5 \\ 0.75 \\ 0.5 \\ 0.38 \\ 0.3 \\ 0.25 \\ 0.21 \\ 0.19 \end{pmatrix} \qquad d = \begin{pmatrix} 0 \\ 5 \\ 10 \\ 15 \\ 20 \\ 25 \\ 30 \\ 35 \\ 40 \end{pmatrix} ft$$