Attachment 1

TAN V-Tanks Design Drawings

The following drawings were attached to the printed document, and are available on EDMS.

DWG-628442, REV. 0	DWG-628469, REV. 1
DWG-628443, REV. 11	DWG-628470, REV. 1
DWG-628444, REV. 2	DWG-628471, REV. 1
DWG-628445, REV. 1	DWG-628472, REV. 2
DWG-628446, REV. 0	DWG-628473, REV. 1
DWG-628447, REV. 0	DWG-628474, REV. 1
DWG-628448, REV. 0	DWG-628476, REV. 0
DWG-628449, REV. 1	DWG-628478, REV. 5
DWG-628450, REV. 1	DWG-628480, REV. 2
DWG-628451, REV. 1	DWG-628485, REV. 2
DWG-628452, REV. 2	DWG-628488, REV. 3
DWG-628453, REV. 1	DWG-628491, REV. 2
DWG-628454, REV. 1	DWG-628494, REV. 2
DWG-628455, REV. 1	DWG-628814, REV. 2
DWG-628456, REV. 1	DWG-629029, REV. 0
DWG-628459, REV. 3	DWG-629153, REV. 5
DWG-628461, REV. 1	DWG-629154, REV. 0
DWG-628462, REV. 1	DWG-629155, REV. 0
DWG-628463, REV. 1	DWG-629159, REV. 3
DWG-628465, REV. 2	DWG-630323, REV. 0
DWG-628467, REV. 4	DWG-631295 (3 shts), REV. 1
DWG-628468, REV. 4	DWG-631296, REV. 1

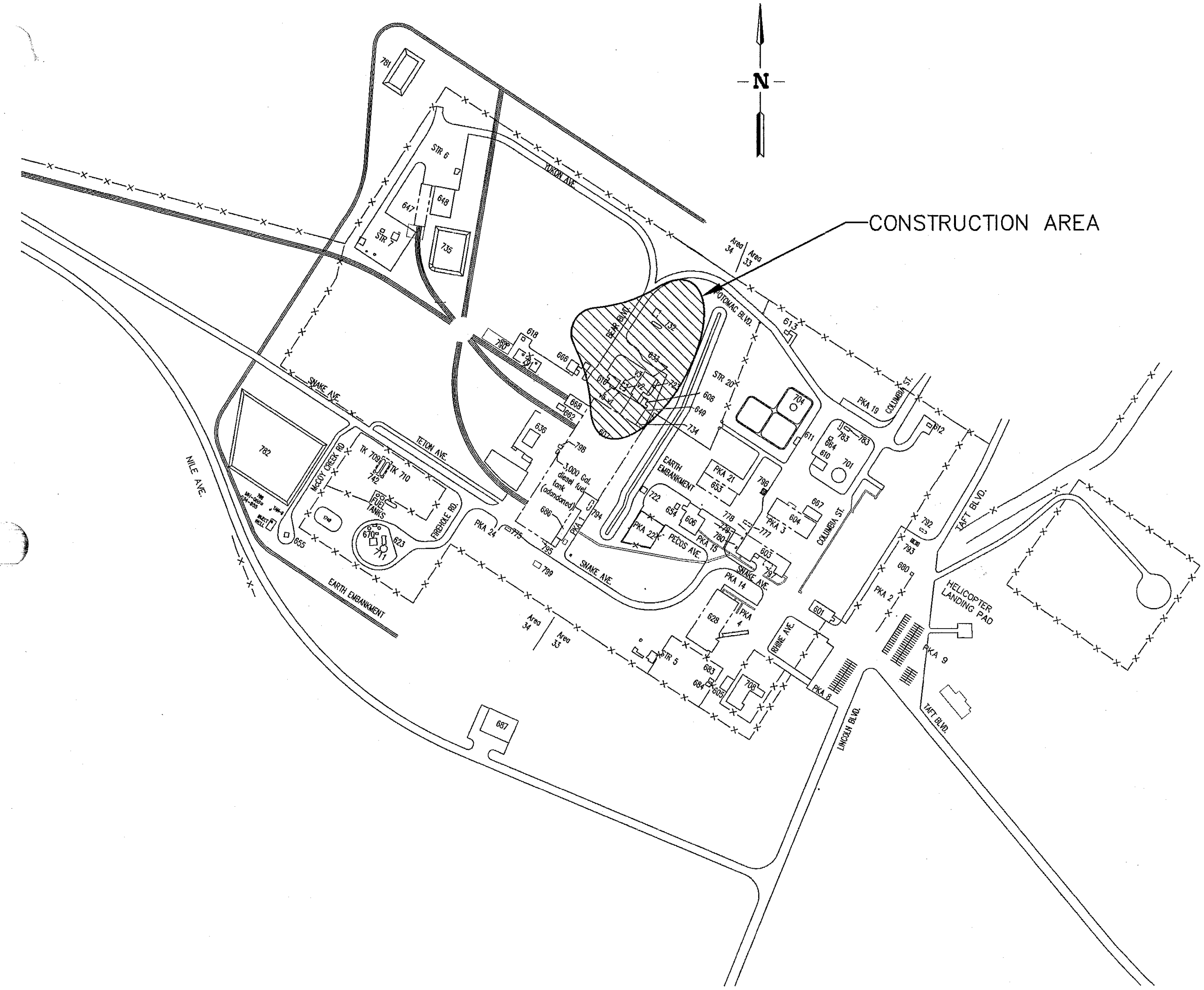

TAN AREA MAP

SCALE: 1"=200.0'

HORIZONTAL DATUM BASED ON SITE SPECIFIC COORDINATES

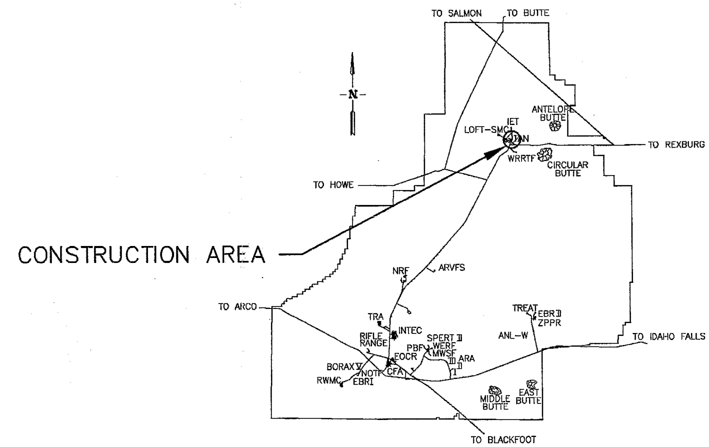

INEEL SITE MAP

SCALE: NONE

REV	DESCRIPTION	EFFECTIVE DATE:
REVISIONS		

FOR DRAWING INDEX SEE DRAWING NO. 628443	SUBCONTRACT NO. N/A	INEEL Idaho National Engineering & Environmental Laboratory BECHTEL BWXT IDAHO, LLC
200' 100' 50' 0 200' SCALE: 1" = 200.0'	REQUESTER: G. Mc DANNEL	TAN
	DESIGN: P.W. BRAGASSA	TSF-09/18 V-TANKS REMEDIATION
	DRAWN: Kris Keller	TAN AREA AND INEEL SITE MAPS
	PROJECT NO. 22901	
	SPCL CODE	SIZE D; CAGE CODE 01MF3; INDEX CODE NUMBER: AREA 032, TYPE 0100, CL 38, ORIG 090; DWG-628442; REV
DESIGN PHASE: AFC	FOR REVIEW/APPROVAL SIGNATURES SEE DAR NO. 113657	
SAFETY CATEGORY: CG	EFFECTIVE DATE: 7/15/04	SCALE: NOTED; SHEET T-1

FMT-01-REV 3.4

File: 628442.dwg Path: K:\TAN WAG-1 V-Tanks\ Title II Design\Controlled DWG\Scope-Change\Released-07-15-04 Date: 07/15/04 - 3:23 P.M. Layout Name: Layout1 ID: KJ1

FMT-DF-REV 3.4

DRAWING INDEX

PAGE NO.	DWG NO.	A-E SHT NO.	REV	DRAWING TITLE
1	628442	T-1		TAN AREA AND INEEL SITE MAPS
2	628443	T-2	11	DRAWING INDEX
2A	632026	T-3		LEGEND
3	628444	C-1	2	SITE PLAN AND DETAIL
4	628445	C-2	1	SITE PLAN
5	628446	C-3		PUMP ACCESS EXCAVATION PLAN – PHASE ONE
6	628447	C-4		TANK AND SOIL REMEDIATION EXCAVATION PLAN – PHASE TWO AND THREE
7	628448	C-5		SOIL REMEDIATION EXCAVATION PLAN SITES 1 AND 2
8	628449	C-6	1	SOIL REMEDIATION EXCAVATION PLAN – PHASE THREE
9	628450	C-7	1	SECTIONS AND DETAIL
10	628451	C-8	1	SECTIONS AND DETAILS
11	628452	C-9	2	SOIL STAGING AREA PLAN
12	628453	C-10	1	FINAL GRADING PLAN
13	628454	C-11	1	EXISTING GRADE PLAN
14	628455	C-12	1	FINISHED GRADE PLAN
15	628456	C-13	1	SECTIONS AND DETAILS
16	628457	C-14	3	TANK REMOVAL OPTION 1, TANK RIGGING PLAN – EXCAVATION TO STAGING AREA
17	628458	C-15	1	TANK REMOVAL OPTION 1, TANK RIGGING PLAN – STAGING AREA TO TRANSPORTER
18	628459	C-16	3	TANK REMOVAL OPTION 2, TANK RIGGING PLAN – EXCAVATION TO TRANSPORTER
19	628460	C-17		TANK RIGGING PLAN – OFF-LOAD TANKS AT ICDF
20	628461	C-18	1	RIGGING DETAILS AND SECTIONS
20A	630323	C-19		TRAILER CRIBBING LAYOUT
21	628462	S-1	1	ISOMETRIC VIEWS
22	628463	S-2	1	TANK SUPPORT SKID AND CONTAINMENT PAN PLAN AND VIEWS
23	628464	S-3	1	TANK SUPPORT SKID PLAN, SECTION, AND VIEW
24	628465	S-4	2	CONTAINMENT PAN PLANS, SECTION, AND DETAILS
25	628466	S-5	1	STEEL SHIELDING PLAN, VIEWS, SECTION, AND DETAIL
25A	629013	S-6		STEEL SHIELDING VIEWS
25B	629014	S-7		STEEL SHIELDING SECTION AND ISOMETRIC VIEW
25C	629029	S-8		SHIELDING PLAN
25D	629030	S-9		SHIELDING STRUCTURE AND BLOCK WALL
25E	630324	S-10	1	TANK LIFTING LUG FABRICATION DETAILS
25F	631580	S-11	1	REMEDIATION TANK INLET STRAINER
25G	632045	S-12		DETAILS AND SECTIONS
26	628467	P-1	4	P&ID
27	628468	P-2	5	P&ID
27A	629153	P-2A	5	OFF-GAS P&ID
27B	629159	P-2B	3	SCRUBBER SKID P&ID (CANCELED)
27C	630391	P-2C		P&ID
27D	632027	P-2D		P&ID
28	628469	P-3	1	SITE PLAN
29	628470	P-4	1	ENLARGED PIPING PLAN A, DETAILS AND SECTION
30	628471	P-5	1	DETAIL AND SECTION
31	628472	P-6	2	TANK DRAINAGE STEPS
32	628473	P-7	1	TANK DRAINAGE STEPS
33	628474	P-8	1	ENLARGED PIPING PLAN B AND PIPE SUPPORTS
34	628475	P-9	1	SECTION
35	628476	P-10		RECEIVING TANK PLAN, ELEVATION, DETAIL AND SECTIONS
35A	629154	P-11		OFF-GAS EQUIPMENT PLAN
35B	629302	P-11A		OFF-GAS EQUIPMENT SECTIONS AND DETAILS
35C	629155	P-12		OFF-GAS EQUIPMENT PLAN, DETAILS, SECTION AND PARTS LIST
36	628477	HV-1		HVAC SPRUNG STRUCTURE PLAN
37	628478	E-1	5	ONE LINE DIAGRAM
38	628479	E-2	1	OVERALL PLAN VIEW
39	628480	E-3	2	ENLARGED ELECTRICAL PLAN
40	628481	E-4	1	POWER POLE PHOTOS – DEMOLITION
41	628482	E-5	1	POWER LINE DETAILS – INSTALL
42	628483	E-6	1	TRANSFORMER DETAIL
43	628484	E-7	2	PUMP CONTROL PANEL DETAIL
44	628485	E-8	2	PUMP CONTROL PANEL SCHEMATIC DIAGRAM
45	628486	E-9	1	MIXER MOTOR PANEL DETAIL
46	628487	E-10	2	RECIRCULATION PUMP MOTOR PANEL DETAIL

DRAWING INDEX

PAGE NO.	DWG NO.	A-E SHT NO.	REV	DRAWING TITLE
47	628488	E-11	3	RECIRCULATION PUMP & MIXER MOTOR PANEL SCHEMATIC DIAGRAMS
48	628489	E-12	1	TANK LEVEL MONITORING PANEL SUPPORT FRAME DETAIL
49	628490	E-13	2	TANK LEVEL MONITORING PANEL & JUNCTION BOX DETAILS AND SECTIONS
50	628491	E-14	2	TANK LEVEL MONITORING WIRING DIAGRAM
51	628492	E-15	2	HIGH-HIGH LEVEL SECONDARY SHUTDOWN PANEL SUPPORT FRAME, WIRING DIAGRAM AND DETAIL
52	628493	E-16	2	VFD PANEL DETAIL
53	628494	E-17	2	VFD WIRING DIAGRAM AND PUMP LEVEL CONTROL LADDER DIAGRAM
54	631306	E-18	–	PANEL V-TANK-REM-PLC-1 LAYOUT
55	631307	E-19	–	V-TANK-REM-PLC-1 WIRING DIAGRAM
56	631308	E-20	–	LEVEL DETECTION LOOP DIAGRAM
57	631309	E-21	–	PUMP CONTROL LOOP DIAGRAM

THIS PACKAGE ALSO INCLUDES ED DRAWINGS

DRAWING INDEX CONTINUED

DWG NO.	REV	DRAWING TITLE
631295	1	FILL PIPING INSTALLATION
631296	1	VENT AND GROUT CAP INSTALLATION
631297	1	RADIAL PREMIXER TUBES

REVISIONS

REV	DESCRIPTION	EFFECTIVE DATE:
1	SEE DAR-113786	7/20/04
2	SEE DAR-113910	7/28/04
3	SEE DAR-114333	8/23/04
4	SEE DAR-116001	11/17/04
5	SEE DAR-121536	3/22/05
6	SEE DAR-121830	4/5/05
7	SEE DAR-124326	6/21/05
8	SEE DAR-124965 INCORPORATES FDC)-124344	8/12/05
9	SEE DAR-126038 INCORPORATES FDC'S	10/31/05
10	SEE DAR-120766	11/3/05
11	SEE DAR-126300	11/15/05

FOR DRAWING INDEX SEE DRAWING NO. 628443	SUBCONTRACT NO. N/A	INEEL (Idaho National Engineering & Environmental Laboratory) BECHTEL BWXT IDAHO, LLC
NO SCALE	REQUESTER: G. Mc DANNEL DESIGN: P.W. BRAGASSA DRAWN: Eric Kengeller PROJECT NO. 22901 SPCL CODE	TAN TSF-09/18 V-TANKS REMEDIATION DRAWING INDEX
DESIGN PHASE: AFC SAFETY CATEGORY: CG	FOR REVIEW/APPROVAL SIGNATURES SEE DAR NO. 113657 EFFECTIVE DATE: 7/15/04	SIZE D; CAGE CODE 01MF3; INDEX CODE NUMBER AREA 034 TYPE 9999 CL 01 ORIG 090; DWG-628443; REV 11 SCALE: NONE; SHEET T-2

File: 628443-11.dwg
Path: K:\TAN WAG-1 V-1
Date: 11/15/05 – 10:57 AM Layout Name: Layout1
Title Block: Design\Controlled DWG\PENCES\OFF-GAS\DAR-126300
ID: PENCRT

REVISIONS		
REV	DESCRIPTION	EFFECTIVE DATE:
1	SEE DAR-114333	8/23/04
2	SEE DAR-116001	11/17/04

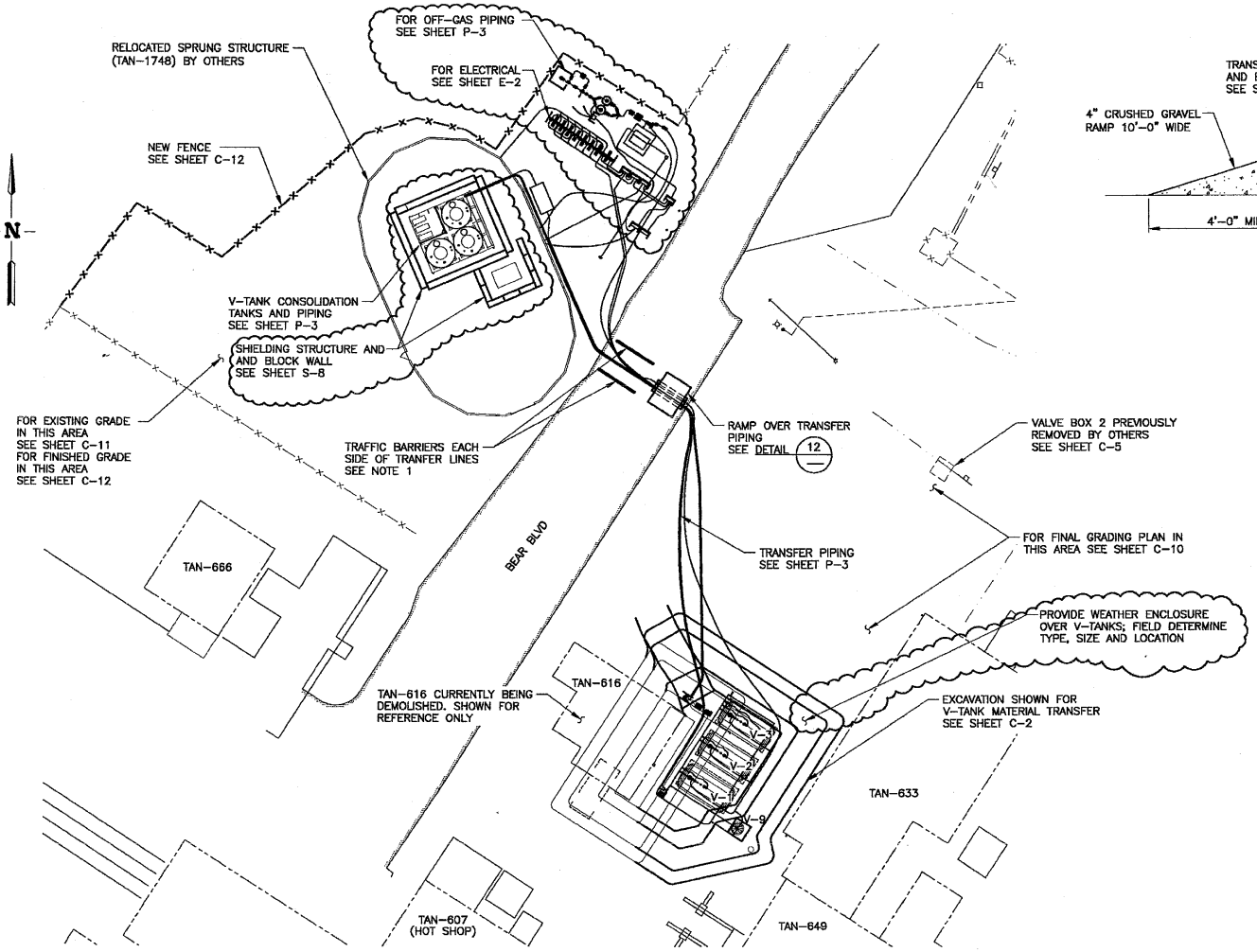

SITE PLAN

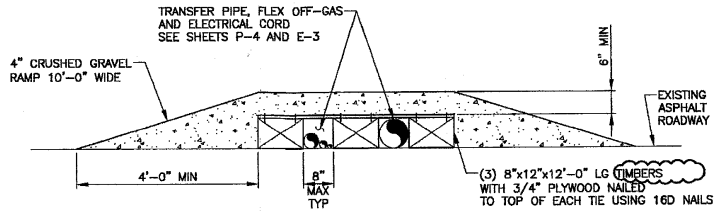

DETAIL 12
SCALE: 3/4"=1'-0"

NOTES

1. POST BARRIERS WITH SIGN, "CLOSED TO TRAFFIC – RAMP USE FOR EMERGENCY VEHICLES ONLY".

PROFESSIONAL ENGINEER REGISTERED 5629 STATE OF IDAHO RANDY F. LIPPERT 11-16-04

FOR DRAWING INDEX SEE DRAWING NO. 628443	SUBCONTRACT NO. N/A	INEEL Idaho National Engineering & Environmental Laboratory BECHTEL BWXT IDAHO, LLC
SCALE: 1" = 20.0'	REQUESTER: G. Mc DANNEL	TAN
SCALE: 3/4" = 1'-0"	DESIGN: R.F. LIPPERT	TSF-09/18 V-TANKS REMEDIATION
	DRAWN: Kris L. Keller	SITE PLAN AND DETAIL
	PROJECT NO. 22901	
	SPCL CODE	
DESIGN PHASE: AFC	FOR REVIEW/APPROVAL SIGNATURES SEE DAR NO. 113754	SIZE D · CAGE CODE 01MF3 · INDEX CODE NUMBER AREA 034 TYPE 0100 CL 02 ORG 090 · DWG- 628444 · REV 2
SAFETY CATEGORY: CG	EFFECTIVE DATE: 7/20/04	SCALE: 1"=20.0' · SHEET C-1

File: 628444-2.dwg Path: K:\TAN WAG-1 V-T... Date: 11/15/04 – 3:41 P.M. Layout Name: C-1 Title II Design\Controlled DWG\ROUND2 ID: KJ1

REVISIONS		
REV	DESCRIPTION	EFFECTIVE DATE:
1	SEE DAR-114333	8/23/04

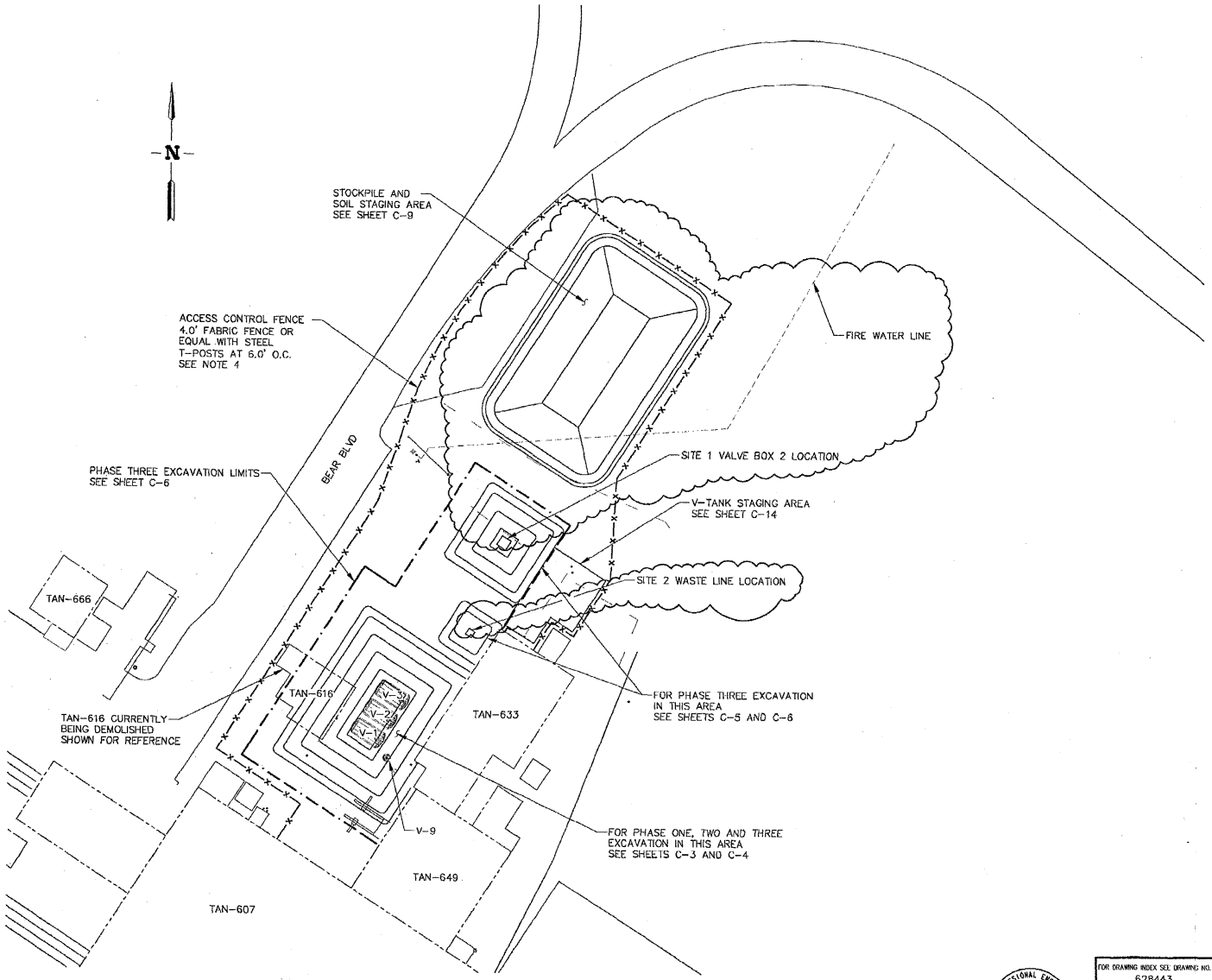

SITE PLAN
SCALE: 1"=30.0'

NOTES

1. PHASE ONE EXCAVATION SHALL BE THE EXCAVATION WORK REQUIRED FOR THE REMOVAL OF THE V-TANKS CONTENTS. THIS WILL INCLUDE EXCAVATING TO THE TOP OF TANKS V-1, 2 AND 3 WHILE SLOPING BACK AT A 1.5:1 SLOPE. ALL ASSOCIATED V-TANKS PIPING WILL BE REMOVED DURING THIS PHASE. SEE SHEETS C-3 AND C-4.
2. PHASE TWO EXCAVATION INCLUDES THE WORK REQUIRED TO EXPOSE THE TANKS FOR REMOVAL. TANK AREA SHALL BE EXCAVATED DOWN TO WITHIN 2.0' OF THE BOTTOM OF THE TANKS. EXCAVATE UNDER TANK FOR RIGGING ACCESS FOR TANK REMOVAL. SEE SHEETS C-4 AND C-18.
3. PHASE THREE EXCAVATION CONSISTS OF THE REMAINING SOIL REMEDIATION WORK. SOIL SHALL BE REMOVED TO THE EXTENT SHOWN, TRANSPORTED TO ICDF FOR DISPOSAL.
4. ACCESS CONTROL FENCING SHALL BE INSTALLED AROUND WORK SITE. LOCATION OF VEHICLE AND PERSONNEL ENTRY POINTS WILL BE DETERMINED IN THE FIELD TO ACCOMMODATE WORK BEING PERFORMED AND TAN-616 DEMOLITION WORK.

PROFESSIONAL ENGINEER REGISTERED 6775 STATE OF IDAHO PATRICK WAYNE BRAGASSA

FOR DRAWING INDEX SEE DRAWING NO. 628443	SUBCONTRACT NO. N/A	INEEL (Lockheed Martin Idaho Technologies / BechtelBWXT Idaho, LLC)
60' 20' 10' 0 30' SCALE: 1" = 30.0'	REQUESTOR: G. Mc DANNEL	TAN
	DESIGN: P.W. BRAGASSA	TSF-09/18 V-TANKS REMEDIATION
	DRAWN: [illegible]	SITE PLAN
	PROJECT NO. 22901	
	SPCL CODE	SIZE D · CAGE CODE 01MF3 · INDEX CODE NUMBER AREA 034 TYPE 0100 CA 02 ORIG 090 · DWG-628445 · REV 1
DESIGN PHASE: AFC	FOR REVIEW/APPROVAL SIGNATURES SEE DAR NO. 113754	
SAFETY CATEGORY: CG	EFFECTIVE DATE: 7/20/04	SCALE: NOTED · SHEET C-2

Date: 08/23/04 - 3:16 P.M. | Layout Name: C-2
File: I:\Real II Design\Commitee Dwgs\628445
Path: K:\TAN WAG-1 V-1

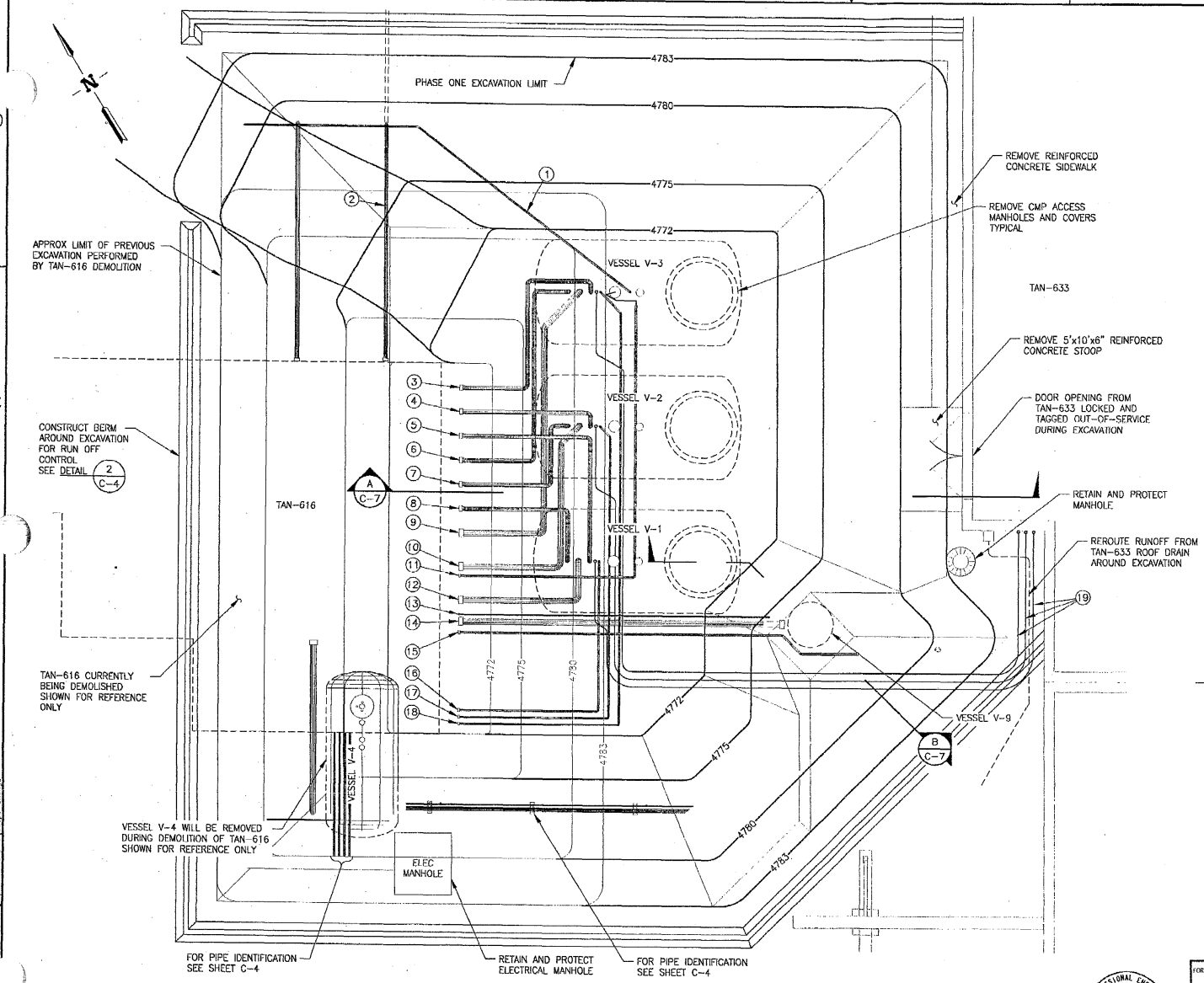

PUMP ACCESS EXCAVATION PLAN – PHASE ONE

SCALE: 1"=5.0'

REVISIONS		
REV	DESCRIPTION	EFFECTIVE DATE:

PIPE LISTING

NO.	PIPE ID	SIZE	T.O.P. ELEVATION	NOTES
1	(WASTE)	1 1/2	4778.28	1, 3
2	(WATER)	3 1/2	4778.73	3
3	106-A2-4"	4	4775.34	1, 3
4	106-A2-4"	4	4775.34	1, 3
5	106-A2-4"	4	4775.35	1, 3
6	105-A2-4"	4	4775.34	1, 3
7	105-A2-4"	4	4775.35	1, 3
8	105-A2-4"	4	4775.34	1, 3
9	104-A2-6"	6	4774.97	1, 3
10	104-A2-6"	6	4774.97	1, 3
11	(INSTRUMENT)	2	4782.09	1, 3
12	104-A2-6"	6	4774.97	1, 3
13	301-B2-1"	1	4778.32	2, 3
14	104-A2-6"	6	4774.96	2, 3
15	901-A2-2"	2	4778.32	2, 3
16	801-A2-1 1/2"	1 1/2	4777.08	1, 3
17	801-A2-1 1/2"	1 1/2	4777.08	1, 3
18	801-A2-1 1/2"	1 1/2	4777.08	1, 3
19	BUBBLER LINES	1/4"	4782	4

NOTES

1. FREE END PREVIOUSLY CAPPED BY OTHERS. DISCONNECT AT TANK FLANGE AND REMOVE. INSTALL 150# BLANK FLANGE ON TANK. SEE SECTION C C-7
2. BOTH ENDS PREVIOUSLY CAPPED BY OTHERS. REMOVE AND DISPOSE.
3. LINE IS ABANDONED. REMOVE AND DISPOSE.
4. BUBBLER LINES ARE POLY TUBING INSTALLED APPROXIMATELY 4" BELOW GRADE. REMOVE AND DISPOSE OF.
5. EXISTING GRADE APPROXIMATED, 4783.0.

X-REF DRAWINGS
628441.DWG

PROFESSIONAL ENGINEER REGISTERED 6775 7-20-04 STATE OF IDAHO PATRICK WAYNE BRAGASSA

FOR DRAWING INDEX SEE DRAWING NO. 628443	SUBCONTRACT NO. N/A	INEEL (Idaho National Engineering & Environmental Laboratory) BECHTEL BWXT IDAHO, LLC
SCALE: 1" = 5.0'	REQUESTER: G. Mc DANNEL	TAN
	DESIGN: P.W. BRAGASSA	TSF-09/18 V-TANKS REMEDIATION
	DRAWN: Kris Keller	PUMP ACCESS EXCAVATION PLAN – PHASE ONE
	PROJECT NO. 22901	
	SPCL CODE:	SIZE D · CAGE CODE 01MF3 · INDEX CODE NUMBER AREA 034 TYPE 0100 CL 02 DRG 090 · DWG-628446 · REV
DESIGN PHASE: AFC	FOR REVIEW/APPROVAL SIGNATURES SEE DAM NO. 113754	
SAFETY CATEGORY: CG	EFFECTIVE DATE: 7/20/04	SCALE: NOTED · SHEET C-3

Date: 07/20/04 – 09:06 A.M. | Layout Name: C-3
I:\Title II Design\Controlled DWG\Scope-Change
ID: KJ1
File: 628446.dwg
Path: K:\TAN WAG-1 V-Ta

REVISIONS		
REV	DESCRIPTION	EFFECTIVE DATE:

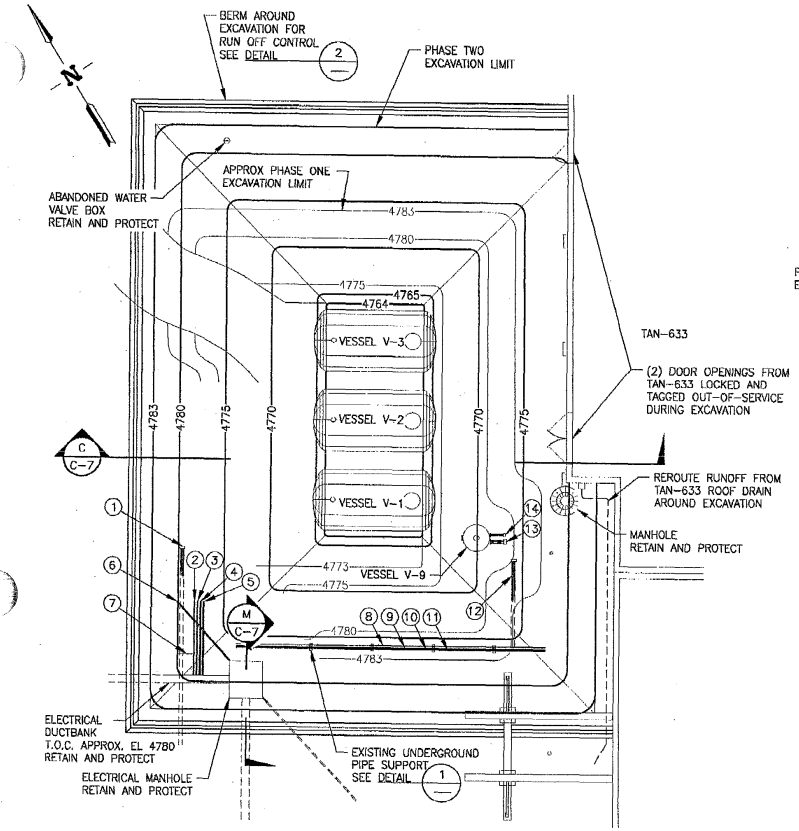

TANK EXCAVATION PLAN – PHASE TWO

SCALE: 1"=10.0'

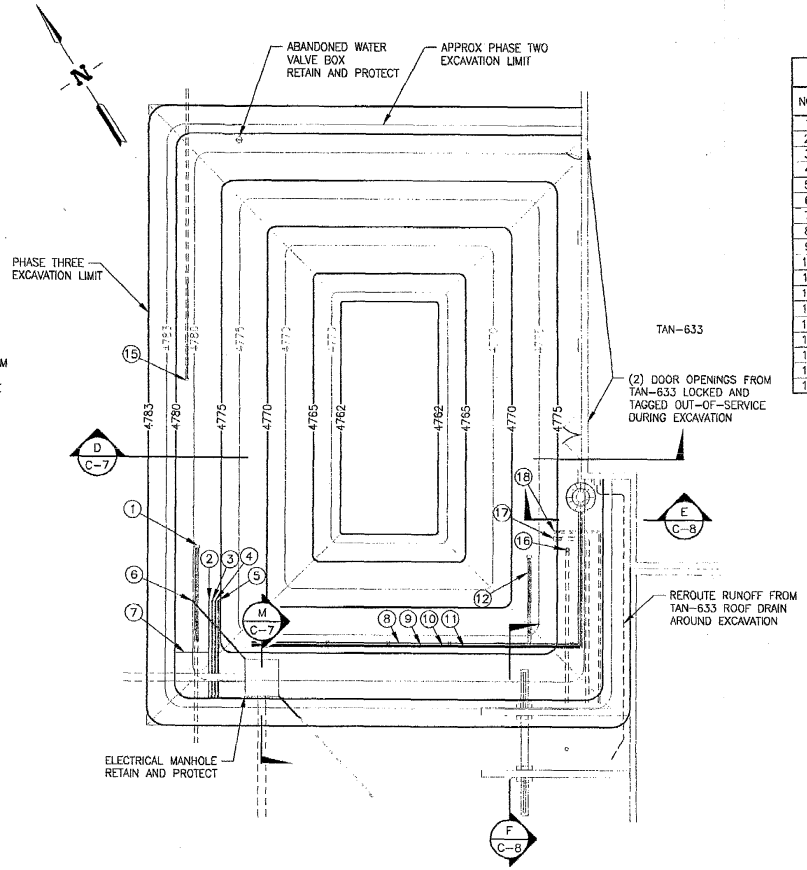

SOIL REMEDIATION EXCAVATION PLAN – PHASE THREE

SCALE: 1"=10.0'

PIPE LISTING

NO.	PIPE ID	SIZE	T.O.P. ELEVATION	NOTES
1	(SEWER)	6	4779.87	1
2	(AIR)	1 1/2	4780.01	1
3	(AIR)	1 1/4	4780.01	1
4	(STEAM-COND)	2	4780.01	1
5	(STEAM-COND)	2	4780.01	1
6	(FIBER OPTIC)	1 3/4	4782.18	1
7	(AIR)	1	4779.99	1
8	H2SO4	1	4777.51	3, 5
9	HWS	3/4	4777.50	3, 5
10	NAOH	1	4777.51	3, 5
11	HWR	3/4	4777.50	3, 5
12	PI-A-3	6	4775.27	2
13	(WASTE)	6	4775.54	4
14	(WASTE)	3 1/2	4774.99	4
15	(WASTE)	6	4778.85	1
16	(SEWER VENT)	6	4783.08	3
17	(WASTE)	6	4774.99	3
18	(WASTE)	3 1/2	4775.29	3

NOTES

1. LINE CAPPED PREVIOUSLY AT TAN-616 LINES WILL BE EXPOSED DURING EXCAVATION, BUT NOT REQUIRED TO BE REMOVED. RETAIN AND PROTECT.
2. LINE CAPPED PREVIOUSLY AT VALVE BOX #1 WILL BE EXPOSED DURING EXCAVATION, BUT NOT REQUIRED TO BE REMOVED.
3. LINE EXPOSED DURING EXCAVATION. RETAIN AND PROTECT.
4. LINE CAPPED. REMOVE AND DISPOSE OF.
5. PIPES ARE SUPPORTED UNDERGROUND ON EXISTING PIPE SUPPORTS AT 10.0' ON CENTER. PIPES ARE ENCLOSED WITH GILSULATE INSULATION AND ABANDONED. FOR INFORMATION. SEE DETAIL 1

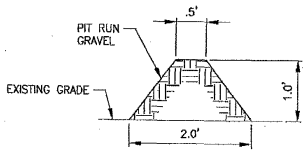

DETAIL 2 TYP

SCALE: 1"=1.0'

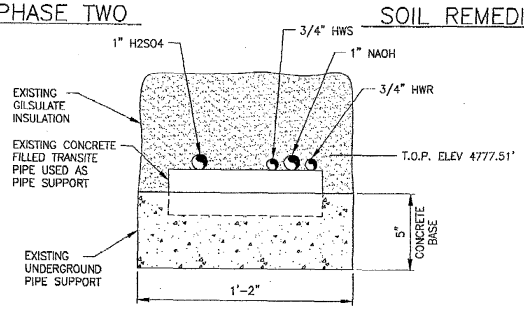

DETAIL 1

SCALE: 3"=1'-0"

X-REF DRAWINGS
628441.DWG

FOR DRAWING INDEX SEE DRAWING NO. 628443	SUBCONTRACT NO. N/A	INEEL (Idaho National Engineering & Environmental Laboratory) BECHTEL BWXT IDAHO, LLC
SCALE: 1" = 10.0' / SCALE: 3" = 1'-0"	REQUESTER: G. Mc DANNEL	TAN
	DESIGN: P.W. BRAGASSA	TSF-09/18 V-TANKS REMEDIATION TANK AND SOIL REMEDIATION EXCAVATION PLAN – PHASE TWO AND THREE
	DRAWN: Chris Forsaller	
	PROJECT NO. 72901	
	SPCL CODE	
DESIGN PHASE: AFC	FOR REVIEW/APPROVAL SIGNATURES SEE DWG NO. 113754	SIZE D / CAGE CODE 01MF3 / INDEX CODE NUMBER AREA 034 TYPE 0100 SQ 02 SUBSQ 090 / DWG 628447 / REV
SAFETY CATEGORY: CG	EFFECTIVE DATE: 7/20/04	SCALE: NOTED / SHEET C-4

PROFESSIONAL ENGINEER REGISTERED 6175 7-20-04 STATE OF IDAHO PATRICK WAYNE BRAGASSA

Date: 07/20/04 – 09:05 A.M. | Layout Name: C-4
Title II Design\Controlled DWG\Scope-Change
Db: KJ1
File: 628447.dwg
Path: K:\TAN WGA-1 V-Tan

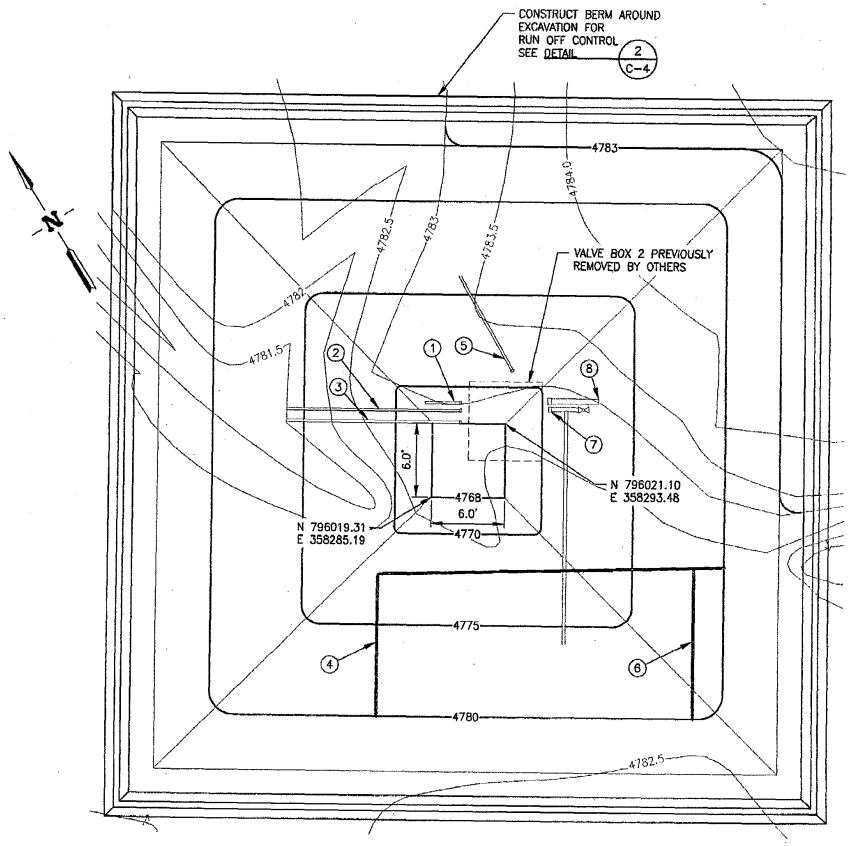

SOIL REMEDIATION EXCAVATION PLAN – SITE 1
(VALVE BOX 2 LOCATION)

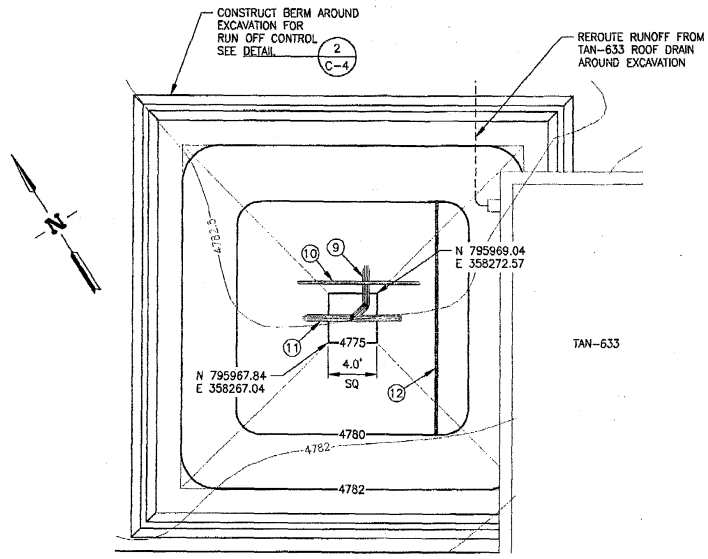

SOIL REMEDIATION EXCAVATION PLAN – SITE 2
(WASTE LINE LOCATION)

NOTES

1. LINES CAPPED PREVIOUSLY AND TO REMAIN IN PLACE.
2. LINES TO REMAIN IN PLACE.
3. PIPES SHOWN WILL BE EXPOSED DURING EXCAVATION RETAIN AND PROTECT.

X-REF DRAWINGS
628441.DWG

PIPE LISTING

NO.	PIPE ID	SIZE	T.O.P. ELEVATION	NOTES
1	(WASTE)	2	4776.07	1
2	WDC-10026	2	4776.07	1
3	WDA-10027	2	4776.07	1
4	(GROUNDING)	N/A	4780.09	2
5	(WASTE IET)	2	4776.0	1
6	(GROUNDING)	N/A	4780.09	2
7	(WASTE)	4	4776.14	1
8	(WASTE)	5	4776.19	1
9	(WASTE)	6	4776.51	2
10	(WASTE)	3 1/2	4776.90	2
11	(WASTE)	6	4776.43	2
12	(GROUNDING)	N/A	4780.09	2

PROFESSIONAL ENGINEER REGISTERED 6775 STATE OF IDAHO PATRICK WAYNE BRAGASSA

FOR DRAWING INDEX SEE DRAWING NO.	628443
SCALE: 1" = 5.0'	
DESIGN PHASE:	AFC
SAFETY CATEGORY:	CG
SUBCONTRACT NO.	N/A
REQUESTER:	G. Mc DANNEL
DESIGN:	P.W. BRAGASSA
DRAWN:	Gary Fuller
PROJECT NO.	22901
SPCL CODE	
FOR REVIEW/APPROVAL SIGNATURES SEE DAR NO.	113754
EFFECTIVE DATE:	7/20/04

INEEL — BECHTEL BWXT IDAHO, LLC

TAN

TSF-09/18 V-TANKS REMEDIATION
SOIL REMEDIATION EXCAVATION PLAN
SITES 1 AND 2

SIZE	CAGE CODE	INDEX CODE NUMBER					DWG-	REV
		AREA	FUNC	LA	DISC			
D	01MF3	034	0100	02	090		628448	

SCALE: 1"=5.0' SHEET C-5

Date: 07/29/04 – 08:04 AM | Layout: Name: C-5
Title II Design\Controlled DWG\Scope-Change
Id: KJI
Title: 628448.dwg
Scale: X:\04 WAG-1 V-Tank

REVISIONS		
REV	DESCRIPTION	EFFECTIVE DATE:
1	SEE DAR-114333	8/23/04

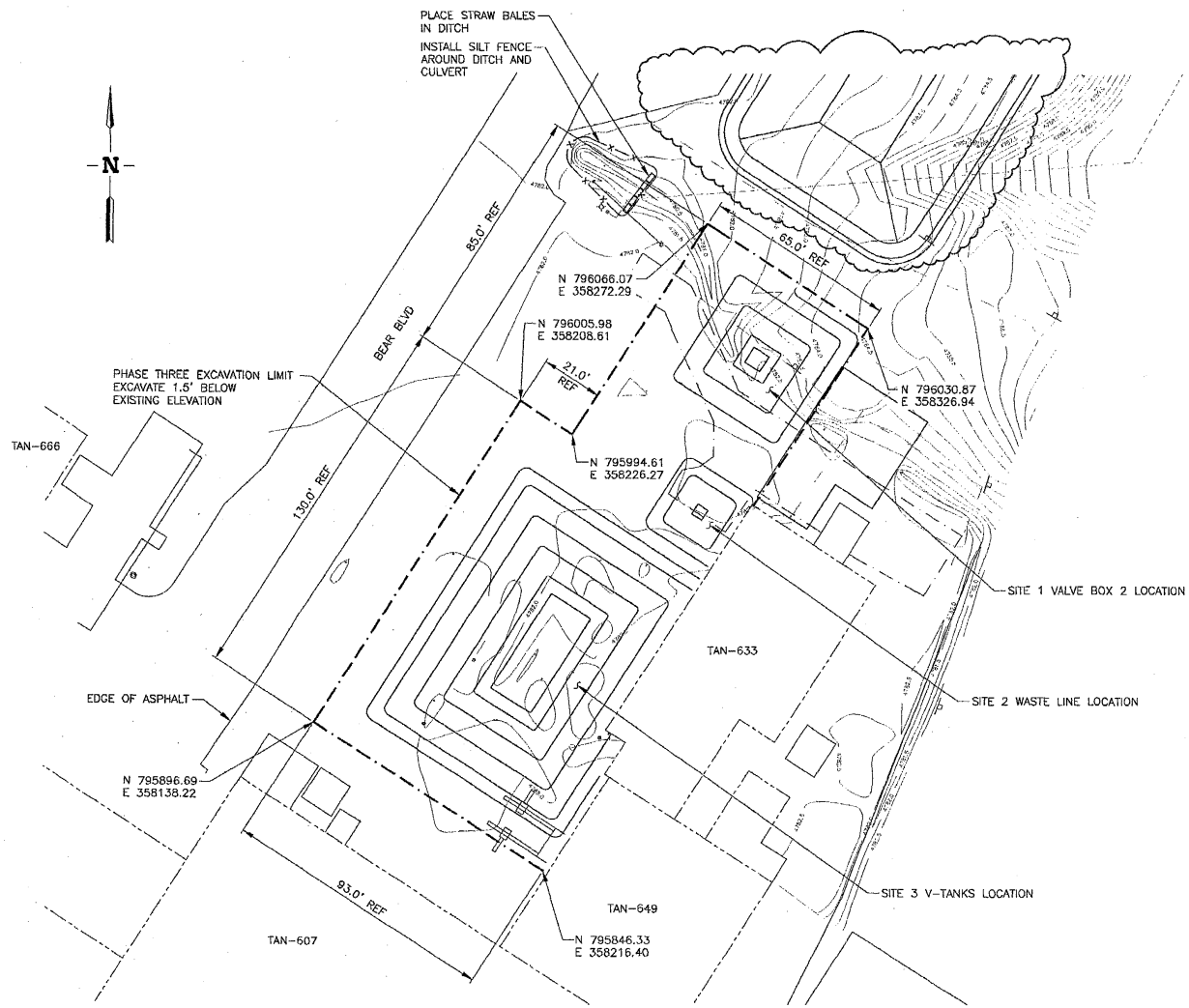

ESTIMATED EXCAVATIONS VOLUMES

PHASE ONE	880 CY
PHASE TWO	949 CY
PHASE THREE	1,454 CY

SOIL REMEDIATION EXCAVATION PLAN – PHASE THREE

SCALE: 1"=20.0'

PROFESSIONAL ENGINEER REGISTERED 6775 8-23-04 STATE OF IDAHO PATRICK WAYNE BRAGASSA

FOR DRAWING INDEX SEE DRAWING NO. 628443	SUBCONTRACT NO. N/A	INEEL
SCALE: 1" = 20.0'	REQUESTER: G. Mc DANNEL	TAN
	DESIGN: P.W. BRAGASSA	TSF-09/18 V-TANKS REMEDIATION
	DRAWN: Kris Keller	SOIL REMEDIATION EXCAVATION PLAN – PHASE THREE
	PROJECT NO. 22901	
	SPCL CODE	
DESIGN PHASE: AFC	FOR REVIEW/APPROVAL SIGNATURES SEE DAR NO. 113754	SIZE D · CAGE CODE 01MF3 · INDEX CODE NUMBER AREA 034 TYPE 0100 CL 02 ORIG 090 · DWG-628449 · REV 1
SAFETY CATEGORY: CG	EFFECTIVE DATE: 7/20/04	SCALE: NOTED · SHEET C-6

File: 628449-1.dwg
Path: K:\TAN WAG-1 V-Ta
Date: 08/23/04 - 3:16 P.M. | Layout Name: C-6
Title II Design\Controlled DWG\REVISED
ID: KJ1

REVISIONS		
REV	DESCRIPTION	EFFECTIVE DATE:
1	SEE DAR-116001	11/17/04

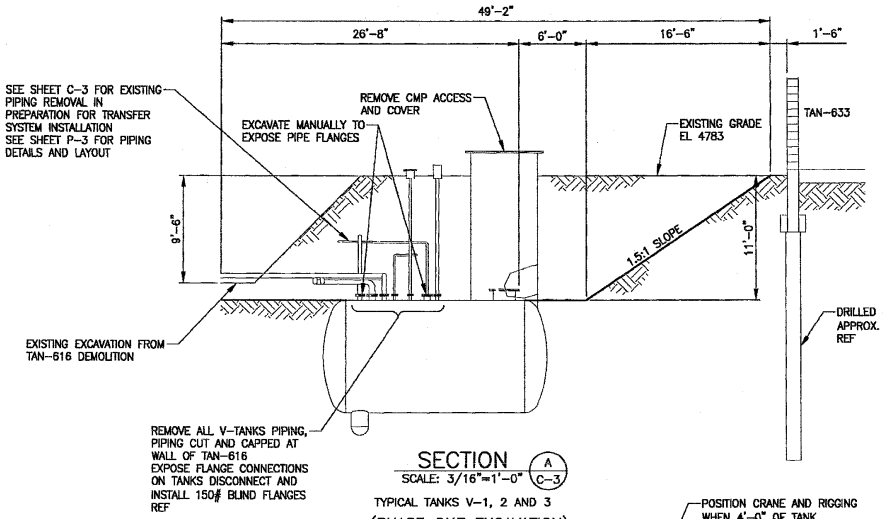

SECTION (A / C-3)
SCALE: 3/16"=1'-0"
TYPICAL TANKS V-1, 2 AND 3
(PHASE ONE EXCAVATION)

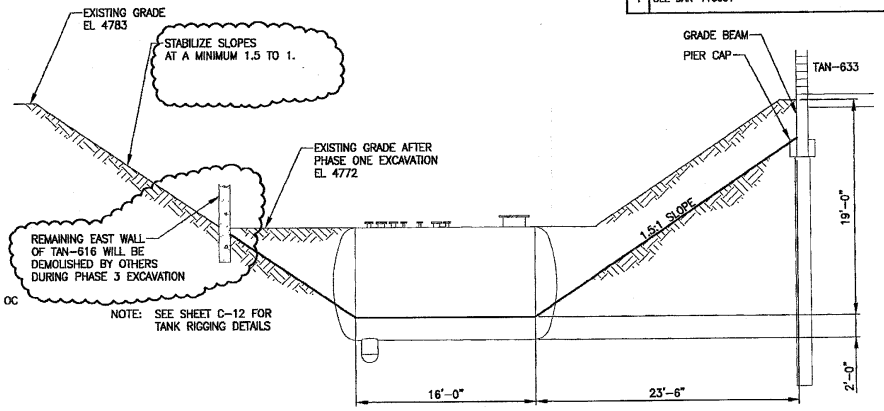

SECTION (C / C-4)
SCALE: 3/16"=1'-0"
(PHASE TWO EXCAVATION)

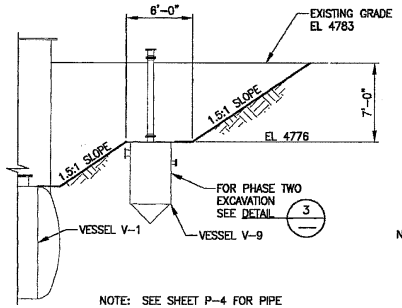

NOTE: SEE SHEET P-4 FOR PIPE INSTALLATION AND CATCH BASIN DETAILS

SECTION (B / C-3)
SCALE: 3/16"=1'-0"
(PHASE ONE EXCAVATION)

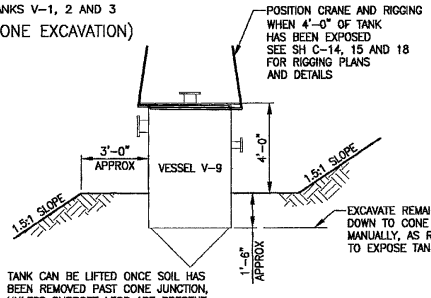

NOTE: TANK CAN BE LIFTED ONCE SOIL HAS BEEN REMOVED PAST CONE JUNCTION, UNLESS SUPPORT LEGS ARE PRESENT ON TANK, THEN ALL SOIL MUST BE REMOVED.

DETAIL (3)
SCALE: 3/8"=1'-0"
(PHASE TWO EXCAVATION)

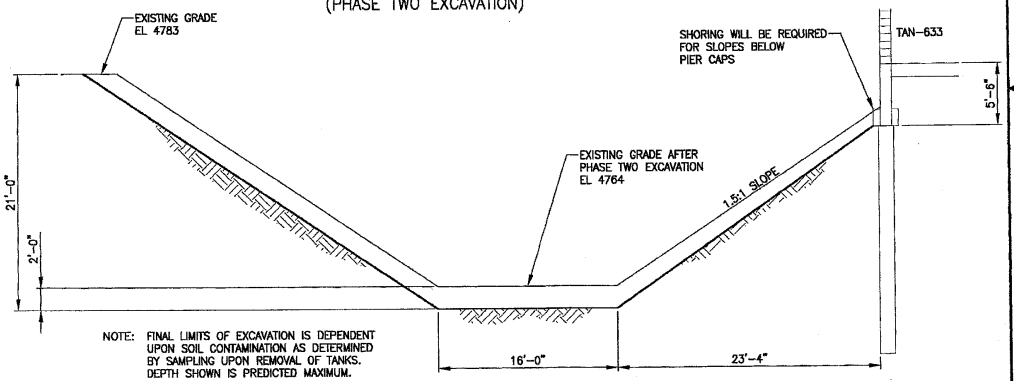

SECTION (D / C-4)
SCALE: 3/16"=1'-0"
(PHASE THREE EXCAVATION)

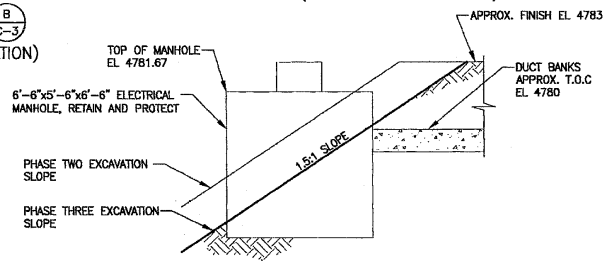

SECTION (M / C-4)
SCALE: 3/8"=1'-0"
(PHASE THREE EXCAVATION)

PROFESSIONAL ENGINEER REGISTERED 6715 11-16-04 STATE OF IDAHO WAYNE BRAGASSA

FOR DRAWING INDEX SEE DRAWING NO. 628443	SUBCONTRACT NO. N/A	INEEL (Idaho National Engineering & Environmental Laboratory) BECHTEL BWXT IDAHO, LLC
SCALE: 3/16" = 1'-0"	REQUESTER: G. Mc DANNEL	TAN
SCALE: 3/8" = 1'-0"	DESIGN: P.W. BRAGASSA	TSF-09/18 V-TANKS REMEDIATION
	DRAWN:	SECTIONS AND DETAIL
	PROJECT NO. 22901	
	SPEC. CODE	
DESIGN PHASE: AFC	FOR REVIEW/APPROVAL SIGNATURES SEE DAR NO. 113754	SIZE D; CAGE CODE 01MF3; INDEX CODE NUMBER AREA 034 TYPE 0100 GL 02 ORG 090; DWG- 628450; REV 1
SAFETY CATEGORY: CG	EFFECTIVE DATE: 7/20/04	SCALE: NOTED; SHEET C-7

FMT-01-REV 3.4

Date: 11/18/04 - 11:24 AM | Layout Name: C-7
File: Title II Design\Contract Dwgs\628450
Plot: 628450-1.dwg
Pen: ASME Web-1 V-1

REVISIONS		
REV	DESCRIPTION	EFFECTIVE DATE:
1	SEE DAR-116001	11/17/04

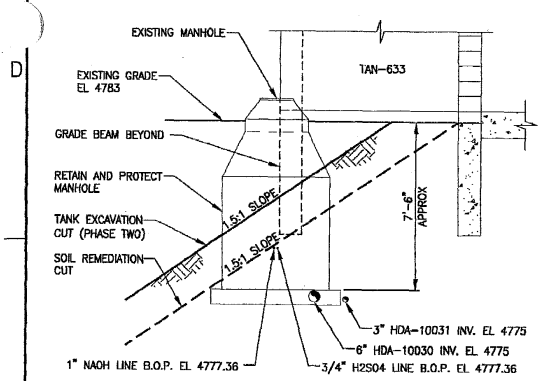

SECTION E C-4
SCALE: 3/8"=1'-0"
(PHASE THREE EXCAVATION)

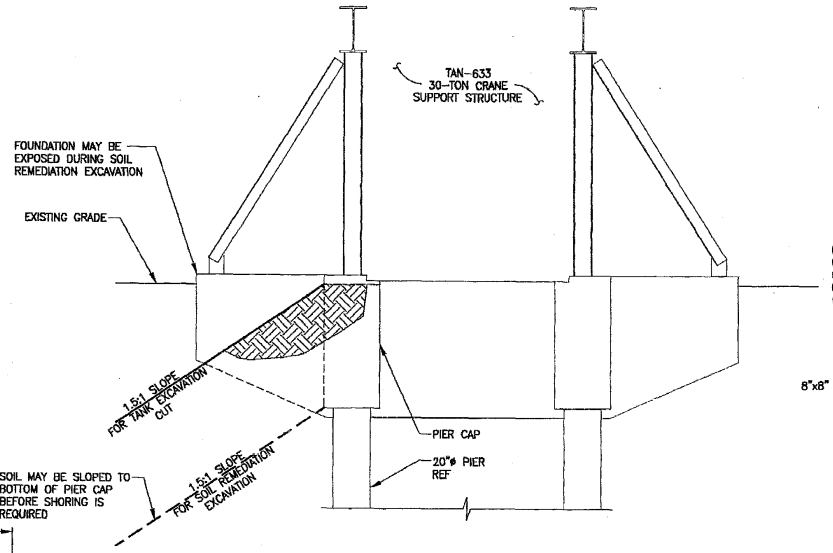

SECTION F C-4
SCALE: 3/8"=1'-0"
(PHASE THREE EXCAVATION)

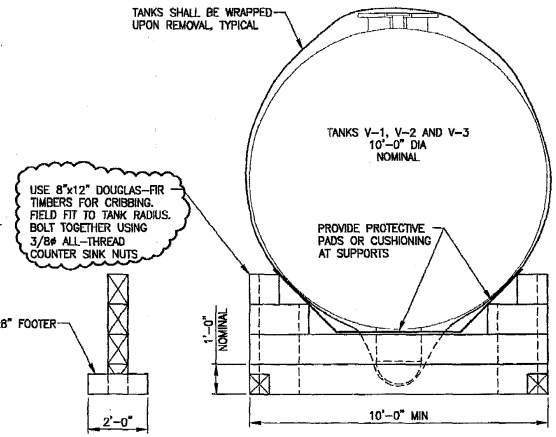

TYPICAL TANK V-1, V-2 AND V-3 CRIBBING
SCALE 1/2"=1'-0"
NOTE: (2) REQUIRED PER TANK SPACED AT 10'-0" MIN.

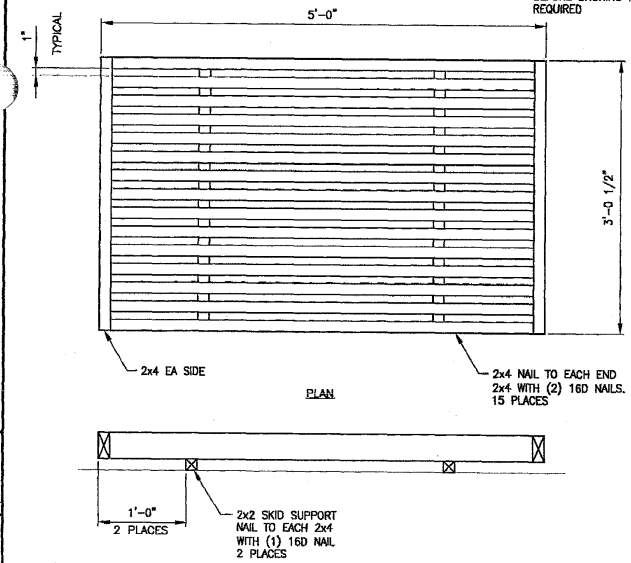

TEMPORARY PLATFORM DESIGN
SCALE 1 1/2"=1'-0"
8 REQUIRED
NOTE: ALL LUMBER SHALL BE DOUGLAS FIR LARCH NO.2 MINIMUM.

PAINT THE TOP SURFACE OF TEMPORARY PLATFORMS WITH A SLIP RESISTANT EXTERIOR, ACRYLIC-ENAMEL PAINT. (2) COATS REQUIRED, 2.5 MIL DRY-FILM THICKNESS. COLOR SHALL BE WHITE.

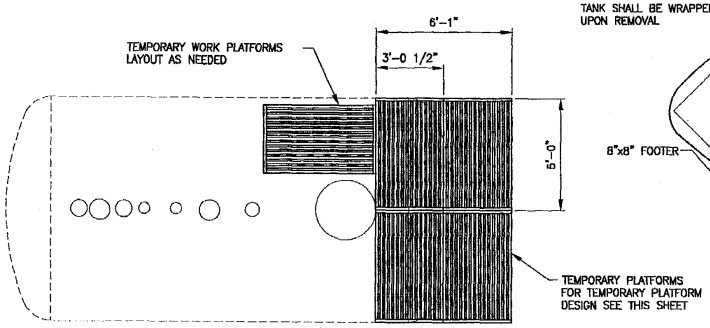

TEMPORARY PLATFORM LAYOUT
SCALE 3/8"=1'-0"

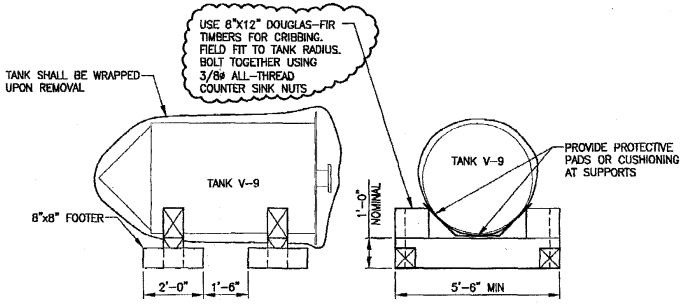

TYPICAL TANK V-9 CRIBBING
SCALE 1/2"=1'-0"

PROFESSIONAL ENGINEER REGISTERED 6716 PATRICK WAYNE BRAGASSA STATE OF IDAHO 11-16-04

FOR DRAWING INDEX SEE DRAWING NO. 628443	SUBCONTRACT NO. N/A	INEEL (DOE Idaho Operations Office) BECHTEL BWXT IDAHO, LLC
SCALE: 3/8" = 1'-0" / SCALE: 1 1/2" = 1'-0"	REQUESTER: G. Mc DANNEL	TAN
	DESIGN: P.W. BRAGASSA	TSF-09/18 V-TANKS REMEDIATION
	DRAWN:	SECTIONS AND DETAILS
	PROJECT NO. 22901	
DESIGN PHASE: AFC	SPCL CODE	SIZE D; CAGE CODE 01MF3; INDEX CODE NUMBER AREA 034, TYPE 0100, CL 02, SEQ 090; DWG- 628451; REV 1
SAFETY CATEGORY: CG	FOR REVIEW/APPROVAL SIGNATURES SEE DAR NO. 113754	SCALE: NOTED; SHEET C-8
	EFFECTIVE DATE: 7/20/04	

File: 628451-1.dwg
Path: K:\TAN WAG-1 V-
Date: 11/16/04 - 08:04 A.M. | Layout Name: C-8
Title II Design\Controlled DWG\ROUND2
ID: KJ1

REVISIONS		
REV	DESCRIPTION	EFFECTIVE DATE:
1	SEE DAR-113910	7/28/04
1	SEE DAR-114333	8/23/04

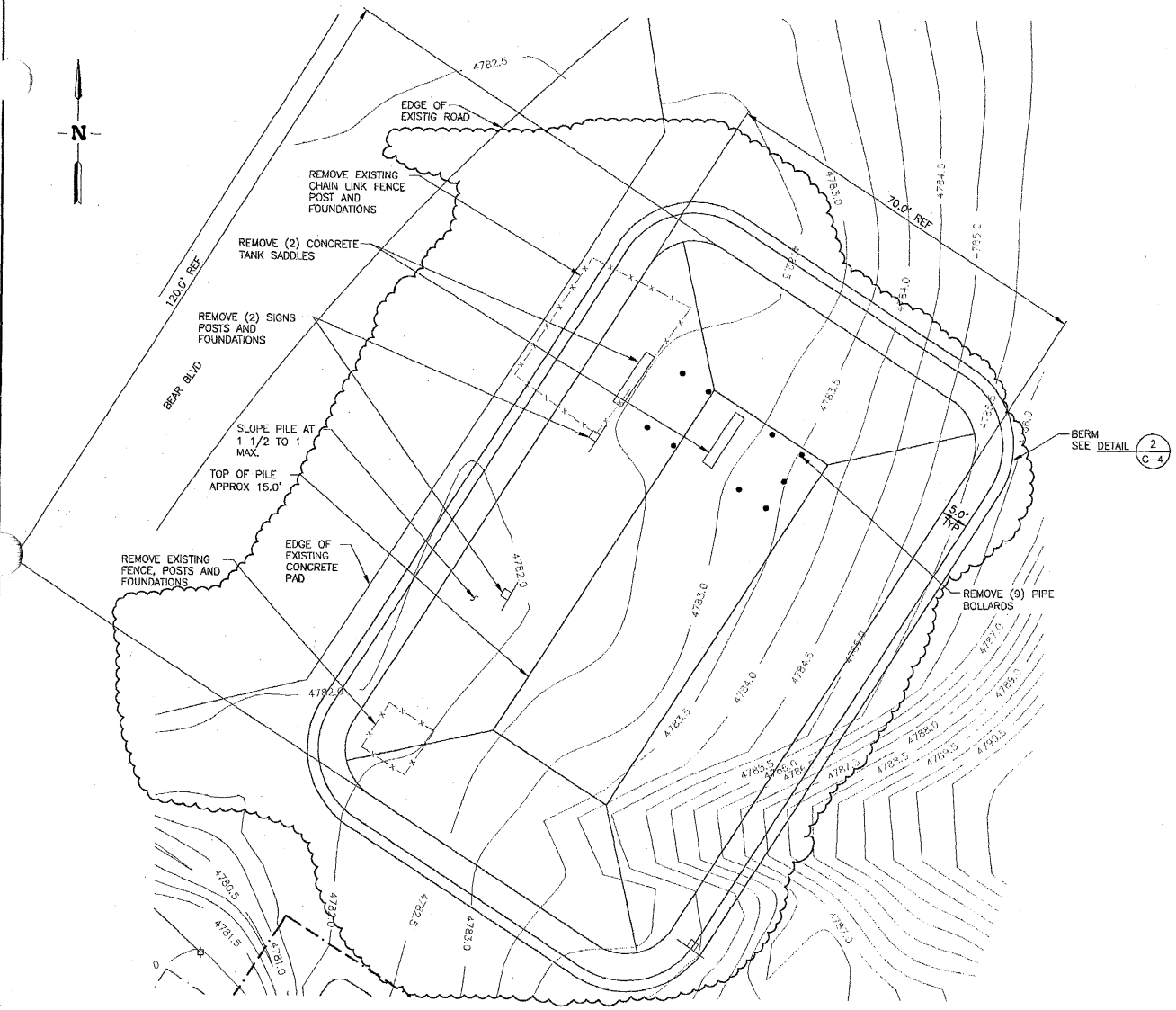

SOIL STAGING AREA PLAN

LEGEND

XXXX EXISTING CONTOURS

NOTES

1. THE EXISTING AREA WHERE THE SOIL STAGING WILL BE CONSTRUCTED SHALL BE STRIPPED AND CLEARED OF ALL BRUSH, WEEDS, RUBBISH AND ORGANIC MATTER. ALL VEGETATION, ROOTS, BRUSH AND DEBRIS ENCOUNTERED SHALL BE REMOVED TO A DEPTH OF 4" BELOW SUBGRADE MINIMUM.
2. AREA SHALL BE PREPPED BY ADDING 3" MINIMUM PIT RUN GRAVEL.
3. HDPE COVER SYSTEM SHALL BE 30MIL MINIMUM THICKNESS WITH THE FOLLOWING MINIMUM PROPERTIES:
   - YIELD STRENGTH: 63 LB/IN ASTM D 638
   - BREAK STRENGTH: 114 LB/IN ASTM D 638
   - YIELD ELONGATION: 12%
   - TEAR RESISTANCE: 21 LB ASTM D 1004
   - PUNCTURE RESISTANCE: 54 LB ASTM D 4833
4. INSTALL COVER IN ACCORDANCE WITH MANUFACTURES WRITTEN INSTRUCTIONS. SEAMS SHALL BE PREFABRICATED BY THE FACTORY TO THE EXTENT POSSIBLE. FIELD SEAMS SHALL COMPLY WITH THE MANUFACTURERS INSTRUCTIONS. SAND BAGS ARE TO BE PLACED AROUND BASE OF PILE CONTINUOUSLY AND ALONG TOP EDGE OF PILE CONTINUOUSLY. PLACE OTHER SAND BAGS AS NEEDED.

PROFESSIONAL ENGINEER REGISTERED 6775 8-23-04 STATE OF IDAHO PATRICK WAYNE BRAGASSA

FOR DRAWING INDEX SEE DRAWING NO. 628443	SUBCONTRACT NO. N/A	INEEL Lockheed Engineering & Environmental Services BECHTEL BWXT IDAHO, LLC
SCALE: 1" = 10.0'	REQUESTER: G. Mc DANNEL	TAN
	DESIGN: P.W. BRAGASSA	TSF-09/18 V-TANKS REMEDIATION
	DRAWN: Luc J. Keller	SOIL STAGING AREA PLAN
	PROJECT NO. 22901	
	SPCL CODE	
DESIGN PHASE: AFC	FOR REVIEW/APPROVAL SIGNATURES SEE DAR NO. 113754	SIZE D · CAGE CODE 01MF3 · INDEX CODE NUMBER AREA 034 TYPE 0100 CL 02 ORIG 090 · DWG-628452 · REV 2
SAFETY CATEGORY: CG	EFFECTIVE DATE: 7/20/04	SCALE: 1"=10.0' · SHEET C-9

File: 628452-2.dwg Path: K:\TAN WAG-1 V-Ta Date: 08/23/04 - 3:15 P.M. Layout Name: C-9 Title II Design\Controlled DWG\REVISED ID: KJ1

REVISIONS		
REV	DESCRIPTION	EFFECTIVE DATE:
1	SEE DAR-114333	8/23/04

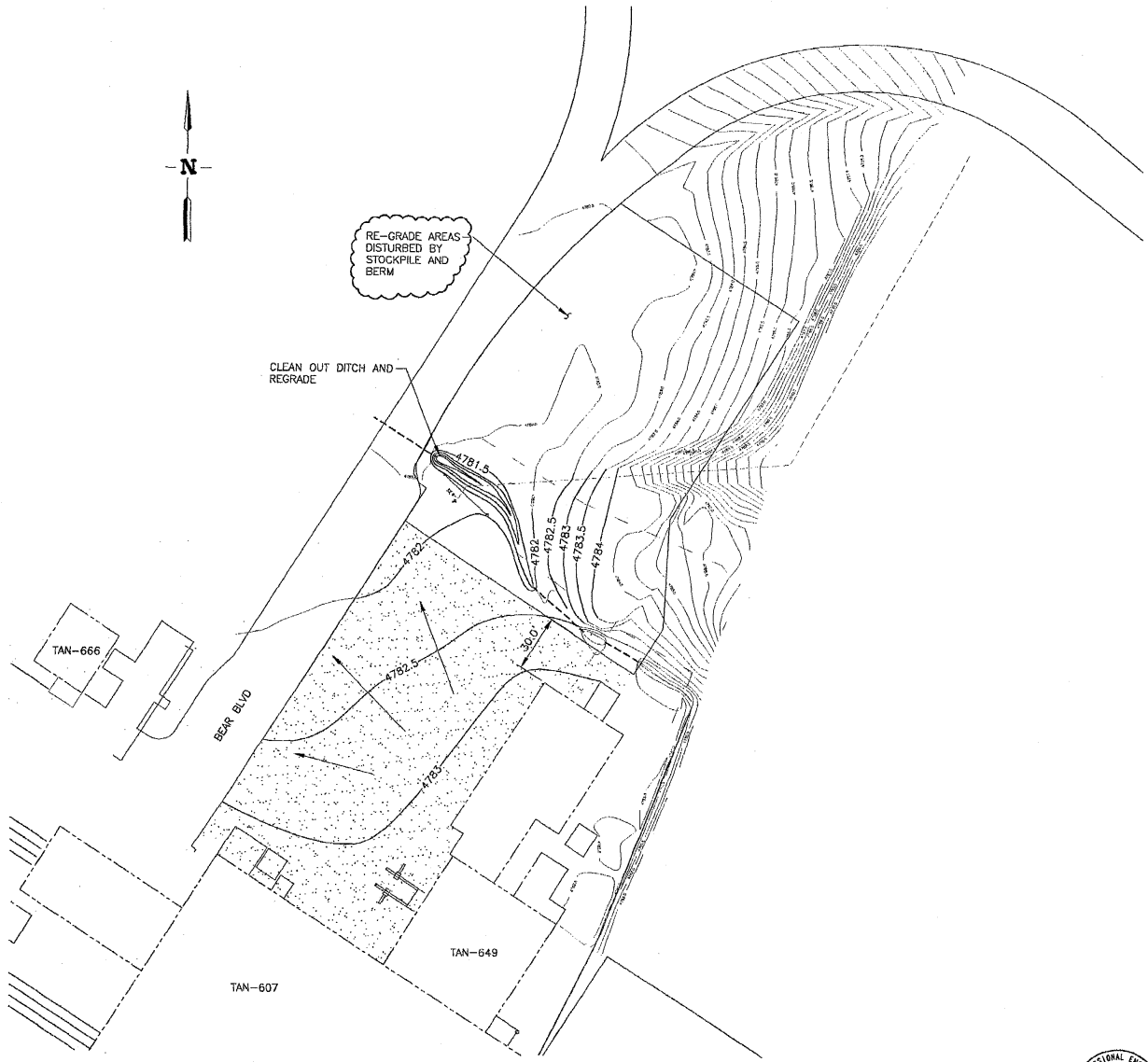

FINAL GRADING PLAN
SCALE: 1"=30.0'

LEGEND

PIT RUN GRAVEL SURFACE

XXXX EXISTING CONTOURS

XXXX NEW CONTOURS

NOTES

1. AREAS DISTURBED SHALL REMAIN PIT RUN GRAVEL SURFACE.
2. RE-SLOPE DITCHES FOR DRAINAGE AS REQUIRED. CLEAN OUT CULVERTS DISTURBED BY REMEDIATION ACTIVITIES.
3. SLOPE FINAL GRADE AWAY FROM BUILDINGS AND STRUCTURES TO MATCH ADJACENT GRADES.

PROFESSIONAL ENGINEER REGISTERED 6775 8-23-04 STATE OF IDAHO PATRICK WAYNE BRAGASSA

FOR DRAWING INDEX SEE DRAWING NO. 628443	SUBCONTRACT NO. N/A	INEEL
30' 20' 10' 0 30' SCALE: 1" = 30.0'	REQUESTER: G. Mc DANNEL	TAN
	DESIGN: P.W. BRAGASSA	TSF-09/18 V-TANKS REMEDIATION
	DRAWN: Eric J. Keller	FINAL GRADING PLAN
	PROJECT NO. 22901	
	SPCL CODE	
DESIGN PHASE: AFC	FOR REVIEW/APPROVAL SIGNATURES SEE DAR NO. 113754	SIZE D · CAGE CODE 01MF3 · INDEX CODE NUMBER AREA 034 TYPE 0100 CL 02 DISC 090 · DWG-628453 · REV 1
SAFETY CATEGORY: CG	EFFECTIVE DATE: 7/20/04	SCALE: NOTED · SHEET C-10

File: 628453-1.dwg Path: K:\TAN WAG-1 V-1 Date: 08/23/04 - 3:14 P.M. Layout Name: C-10 Title II Design\Controlled DWG\REVISED ID: KJ1

REVISIONS		
REV	DESCRIPTION	EFFECTIVE DATE:
1	SEE DAR-114333	8/23/04

ESTIMATED QUANTITIES

ITEM	UNIT	QTY
GRAVEL ACCESS REMOVAL	CY	55
CLEAR AND GRUB	CY	300
EXCAVATION FOR TANK SKID	CY	280
PIT RUN GRAVEL	CY	1005
CRUSHED GRAVEL LEVELING COURSE	CY	252
FENCE REMOVAL	LF	340
NEW FENCE	LF	285
RE-ERECTED FENCE	LF	170

LEGEND

- XXXX — EXISTING CONTOURS
- AREA TO BE CLEARED AND GRUBBED
- DITCH SHOLDER
- DITCH BOTTOM
- TOE OF ACCESS SHOLDER
- ITEMS TO BE REMOVED

NOTES

1. CLEAR AND GRUB: ALL AREAS TO RECEIVE FILL SHALL BE STRIPPED AND CLEARED OF ALL BRUSH, WEEDS, RUBBISH AND ORGANIC MATTER TO A DEPTH OF AT LEAST 4-IN. BELOW THE SUBGRADE.
2. ESTIMATED QUANTITIES ARE BASED ON COMPACTED, IN-PLACE, MATERIAL WITH NO CORRECTION FOR SHRINK OR SWELL.

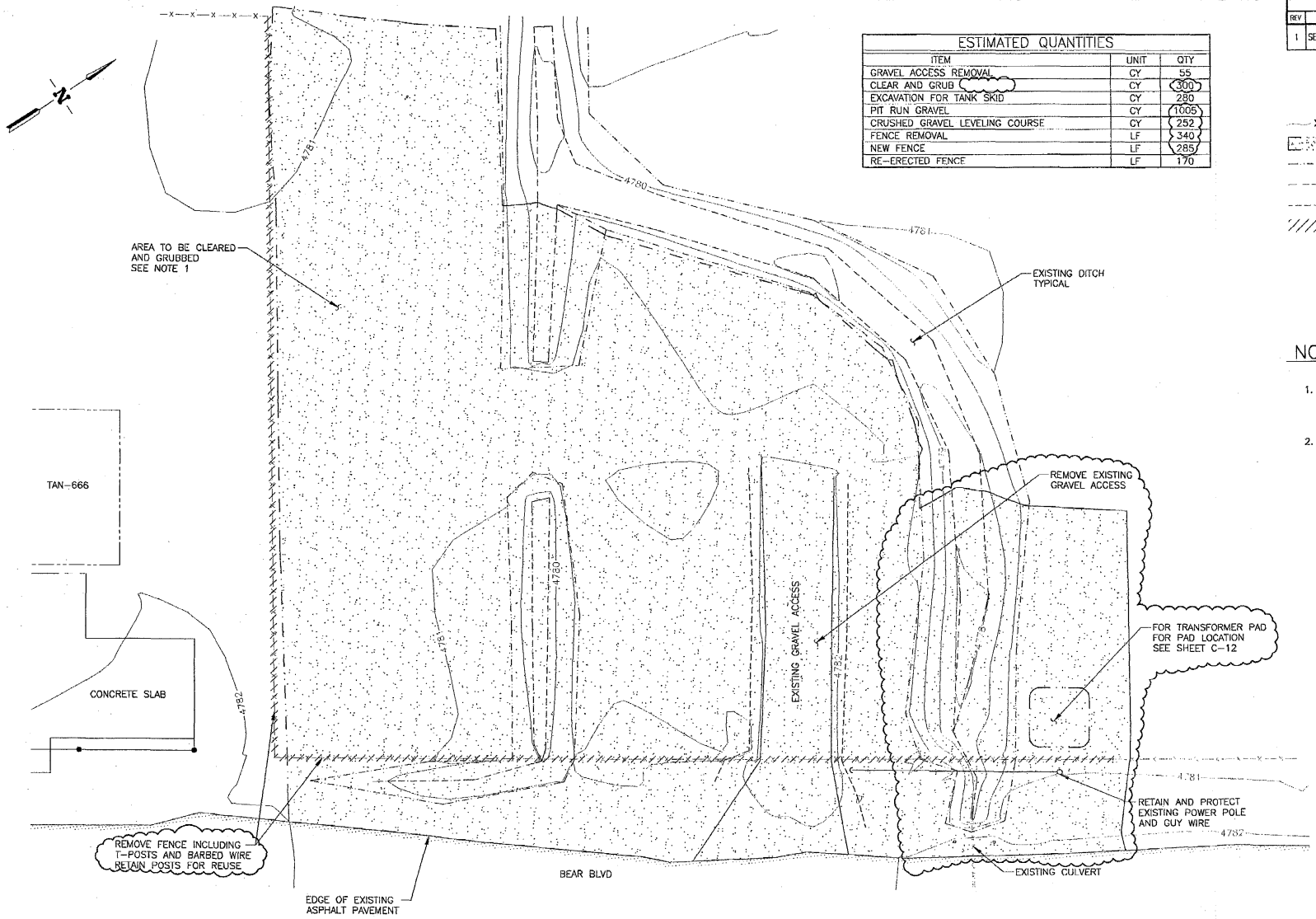

EXISTING GRADE PLAN

PROFESSIONAL ENGINEER REGISTERED 5629 STATE OF IDAHO RANDY F. LIPPERT 8-23-04

FOR DRAWING INDEX SEE DRAWING NO. 628443	SUBCONTRACT NO. N/A	INEEL (Idaho National Engineering & Environmental Laboratory) BECHTEL BWXT IDAHO, LLC
SCALE: 1" = 10.0'	REQUESTER: G. Mc DANNEL	TAN
	DESIGN: R.F. LIPPERT	TSF-09/18 V-TANKS REMEDIATION
	DRAWN: Kris L. Keller	EXISTING GRADE PLAN
	PROJECT NO. 22901	
	SPCL CODE	
DESIGN PHASE: AFC	FOR REVIEW/APPROVAL SIGNATURES SEE DAR NO. 113657	SIZE D · CAGE CODE 01MF3 · INDEX CODE NUMBER: AREA 034, TYPE 0100, CL 02, ORIG 090 · DWG-628454 · REV 1
SAFETY CATEGORY: GG	EFFECTIVE DATE: 7/15/04	SCALE: 1"=10.0' · SHEET C-11

Date: 08/23/04 - 3:14 P.M. | Layout Name: Exist-Grade | ID: KJ1
Title: II Design\Controller: DWG\REVISED
File: 628454-1.dwg
Path: K:\TAN WAG-1 V-Ts

REVISIONS		
REV	DESCRIPTION	EFFECTIVE DATE:
1	SEE DAR-114333	8/23/04

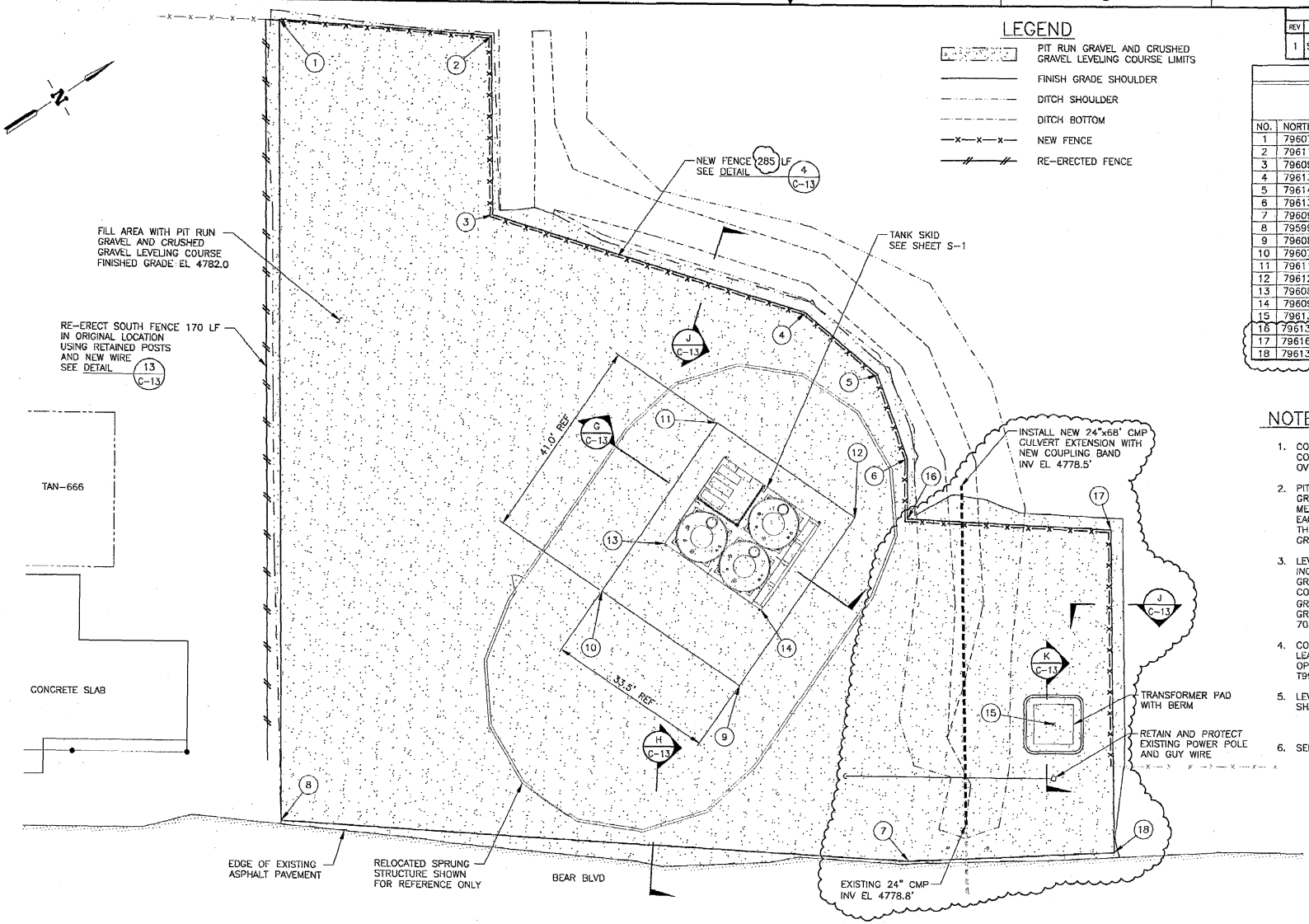

FINISHED GRADE PLAN

COORDINATE TABLE

DATUM:
HORIZONTAL: NAD27
VERTICAL: NGVD29

NO.	NORTHING	EASTING	ELEVATION
1	796079.46	357986.24	4782.0 FINISH GRADE
2	796114.15	358011.71	4782.0 FINISH GRADE
3	796095.46	358041.66	4782.0 FINISH GRADE
4	796138.26	358091.59	4782.0 FINISH GRADE
5	796143.80	358109.89	4782.0 FINISH GRADE
6	796139.82	358127.11	4782.0 FINISH GRADE
7	796096.55	358195.53	4782.0 FINISH GRADE
8	795994.54	358121.45	4782.0 FINISH GRADE
9	796086.84	358147.57	4778.58 BOTTOM OF EXCAVATION
10	796073.70	358116.76	4778.58 BOTTOM OF EXCAVATION
11	796111.41	358100.67	4778.58 BOTTOM OF EXCAVATION
12	796124.56	358131.48	4778.58 BOTTOM OF EXCAVATION
13	796089.46	358115.47	SEE SHEET C-13
14	796098.68	358137.08	SEE SHEET C-13
15	796135.87	358187.96	4782.0 FINISH GRADE
16	796133.33	358137.38	4782.0 FINISH GRADE
17	796166.63	358161.17	4782.0 FINISH GRADE
18	796132.22	358216.15	4782.0 FINISH GRADE

NOTES

1. COMPACT NATURAL SOIL: AFTER CLEARING AND GRUBBING, COMPACT THE NATURAL SOIL TO 90% DENSITY PRIOR TO OVERLAYING WITH ANY FILL MATERIAL.
2. PIT RUN GRAVEL FILL: FILL AREA AS SHOWN WITH PIT RUN GRAVEL AND COMPACT TO 95% DENSITY. LOOSE MEASUREMENT LIFTS SHALL BE 8 INCHES MAXIMUM, AND EACH LIFT COMPACTED BEFORE THE NEXT LIFT IS PLACED THEREON. PIT RUN GRAVEL IS AVAILABLE AT THE TAN GRAVEL PIT.
3. LEVEL COURSE: OVERLAY PIT RUN GRAVEL FILL WITH 4 INCHES OF LEVELING COURSE MATERIAL TO OBTAIN FINISH GRADE AS INDICATED. COMPACT TO 95% DENSITY. LEVELING COURSE MATERIAL SHALL BE NATURALLY OR ARTIFICIALLY GRADED MIXTURE OF 3/4 INCH MAXIMUM SIZE CRUSHED GRAVEL MEETING REQUIREMENTS OF ITD SSHC SUBSECTION 703.04.
4. COMPACTION: ALL MATERIAL SHALL BE COMPACTED TO AT LEAST THE INDICATED PERCENT OF MAXIMUM DENSITY AT OPTIMUM MOISTURE CONTENT AS DETERMINED BY AASHTO T99.
5. LEVELING TOLERANCE: THE FOLLOWING VERTICAL TOLERANCES SHALL BE USED FOR GRADING.
   ±0.20 FT PIT RUN GRAVEL
   ±0.10 FT LEVELING COURSE
6. SEE SHEET C-11 FOR ESTIMATED QUANTITIES.

PROFESSIONAL ENGINEER REGISTERED 5629 STATE OF IDAHO RANDY F. LIPPERT

FOR DRAWING INDEX SEE DRAWING NO. 628443	SUBCONTRACT NO. N/A	INEEL (Bechtel BWXT Idaho, LLC)
SCALE: 1" = 10.0'	REQUESTER: G. Mc DANNEL	TAN
	DESIGN: R.F. LIPPERT	TSF-09/18 V-TANKS REMEDIATION
	DRAWN:	FINISHED GRADE PLAN
	PROJECT NO. 22901	
	SPCL CODE	
DESIGN PHASE: AFC	FOR REVIEW/APPROVAL SIGNATURES SEE DAR NO. 113657	SIZE D · CODE CODE 01MF3 · NEXT DWG NUMBER AREA 034 TYPE 0100 CI 02 ORIG. 090 · DWG-628455 · REV 1
SAFETY CATEGORY: CG	EFFECTIVE DATE: 7/15/04	SCALE: 1"=10.0' · SHEET C-12

Date: 08/23/04 – 3:13 P.M. Layout Name: Finish-Grade
Title II Design\Controlled DWG\REVISED
ID: KJI
File: 628455-1.dwg
Path: K:\TAN WAG-1 V-T

REVISIONS		
REV	DESCRIPTION	EFFECTIVE DATE:
1	SEE DAR-114333	8/23/04

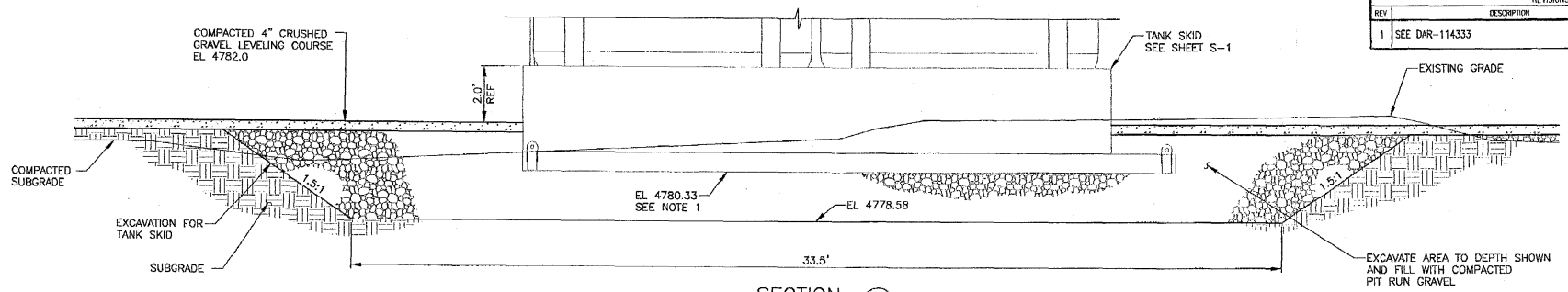

SECTION G C-12
SCALE: 1"=2.0'

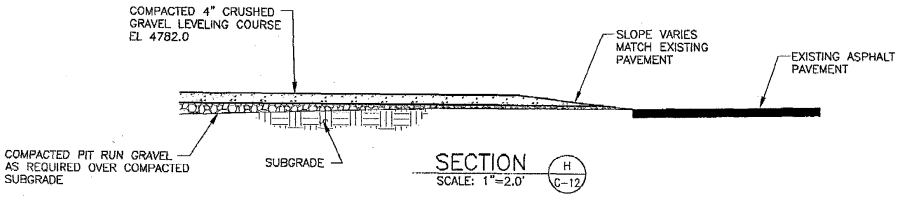

SECTION H C-12
SCALE: 1"=2.0'

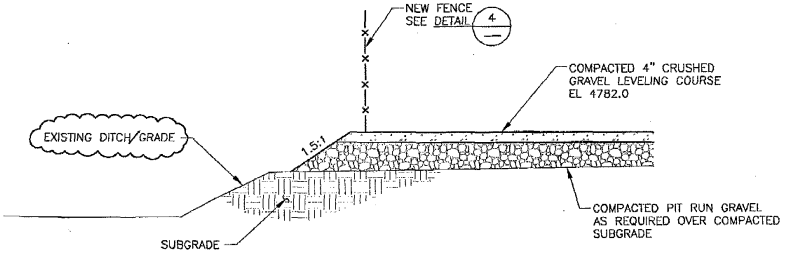

SECTION J C-12
SCALE: 1"=2.0'

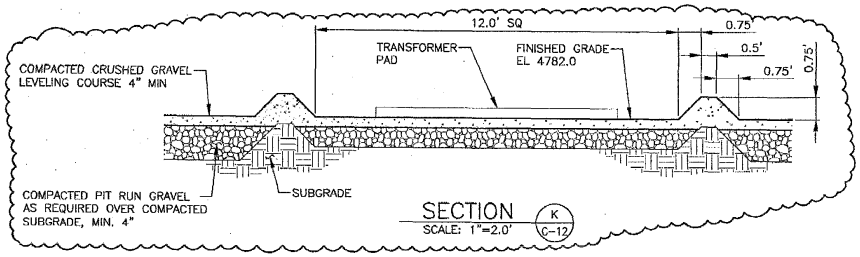

SECTION K C-12
SCALE: 1"=2.0'

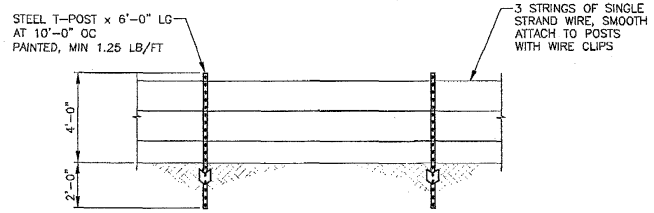

DETAIL 4 TYP
SCALE: 3/8"-1'-0"

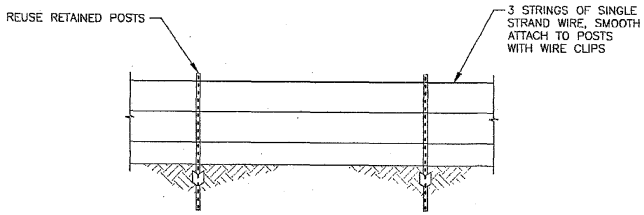

DETAIL 13 TYP
SCALE: 3/8"-1'-0"

NOTES

1. PRIOR TO SETTING TANK SKID, LEVEL GRADE WITH SAND WITHIN 0.025 FT VERTICAL.

PROFESSIONAL ENGINEER REGISTERED 5629 STATE OF IDAHO RANDY F. LIPPERT

FOR DRAWING INDEX SEE DRAWING NO. 628443	SUBCONTRACT NO. N/A	INEEL (Idaho National Engineering & Environmental Laboratory) BECHTEL BWXT IDAHO, LLC
SCALE: 1" = 2.0'	REQUESTER: G. Mc DANNEL	TAN
SCALE: 3/8" = 1'-0"	DESIGN: R.F. LIPPERT	TSF-09/18 V-TANKS REMEDIATION
	DRAWN: Kris L. Keller	SECTIONS AND DETAILS
	PROJECT NO. 22901	
	SPCL CODE	
DESIGN PHASE: AFC	FOR REVIEW/APPROVAL SIGNATURES SEE DAR NO. 113657	SIZE D · CAGE CODE 01MF3 · INDEX CODE NUMBER: AREA 034, TYP 0100, CL 02, ORIG 090 · DWG- 628456 · REV 1
SAFETY CATEGORY: CG	EFFECTIVE DATE: 7/15/04	SCALE: NOTED · SHEET C-13

Date: 08/23/04 - 3:13 P.M. | Layout Name: D Size | ID: KJ1
Title II Design\Controlled DWG\REVISED
File: 628456-1.dwg
Path: K:\TAN WAG-1 V-Ta

REVISIONS		
REV	DESCRIPTION	EFFECTIVE DATE:
1	SEE DAR-114333	8/23/04
2	SEE DAR-116001	11/17/04
3	SEE DAR-121830	4/5/05

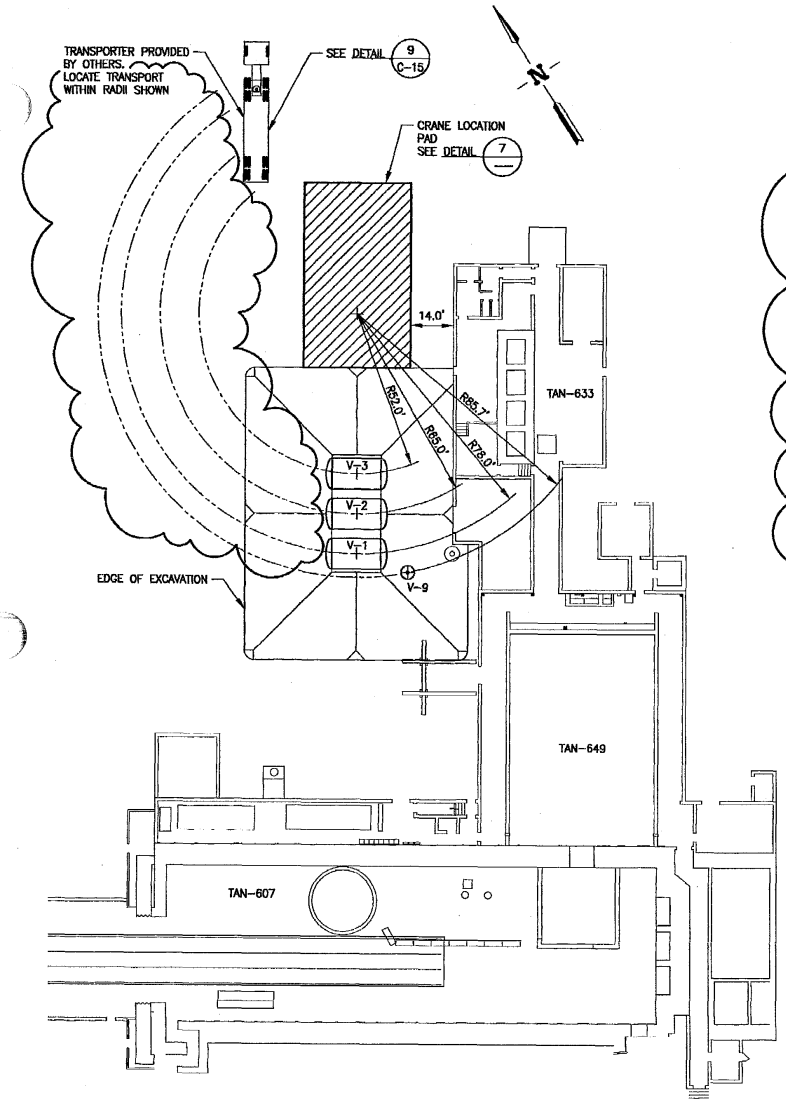

TANK REMOVAL
TANK RIGGING PLAN – EXCAVATION TO TRANSPORTER
SCALE: 1"=20.0'

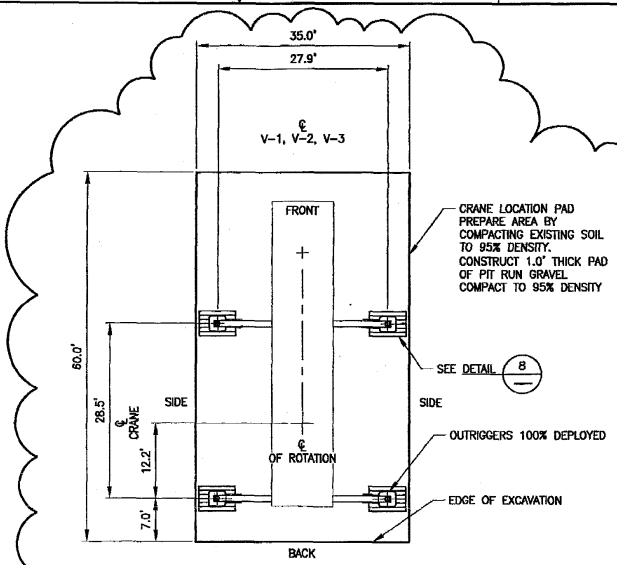

DETAIL 7
SCALE: 1"=10.0'

ESTIMATED CRANE CONFIGURATION AND CAPACITIES TABLE							
	TANK	ESTIMATED REACH RADIUS (FT)	BOOM LENGTH (FT)**	CAPACITY (LBS)	EMPTY TANK LOAD (LBS)	TOTAL LIFTED LOAD (LBS)***	PERCENT OF CAPACITY
LIFTING TANKS FROM EXCAVATION	V-3	60	105	64,000	15,000	28,700	44%
	V-2	70	105	51,000	15,000	28,700	56%
	V-1	80	105	41,000	15,000	28,700	70%
	V-9	90	136	30,400	2,200	5,740*	19%

* ASSUME SPREADER BAR NOT REQUIRED
** MINIMUM BOOM LENGTH LISTED
*** TOTAL LOAD INCLUDES TANK, ALL RIGGING AND 6,000 LBS OF SOLIDIFICATION AGENT

CRANE LOAD CAPACITY NOTES:

CRANE: GROVE GMK 6220
BOOM: 197.0 FEET
COUNTER WEIGHTS: 94,700 LBS
OUTRIGGERS: 100% DEPLOYED
LOAD CAPACITIES BASED ON 360° OF ROTATION
LOADS:

HOOK BLOCK	=	2,140 LBS
LOAD FALL	=	1,260 LBS
SPREADER BAR	=	4,160 LBS
RIGGING AND MISCELLANEOUS	=	140 LBS
TOTAL ADDED LOADS	=	7,700 LBS

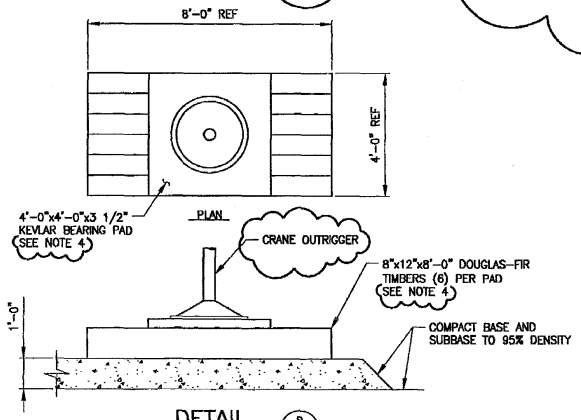

DETAIL 8
SCALE: 1/2"=1'-0"

NOTES

1. CRANE OPERATOR SHALL VERIFY TABLE CAPACITIES PRIOR TO LIFTS.
2. FIELD CONDITIONS MAY REQUIRE MODIFICATIONS OF VALUES. FINAL APPROVED LIFT PLANS SHALL GOVERN.
3. ALIGN CRANE WITH CENTER LINE OF TANKS V-1, V-2 AND V-3. LIFT TANKS FROM EXCAVATION OFF THE BACK QUADRANT OF THE CRANE AT RADIUS SHOWN.
4. CRANE SUBCONTRACTOR MAY PROVIDE THEIR OWN BEARING PADS AND TIMBERS FOR THEIR SPECIFIC CRANE.

PROFESSIONAL ENGINEER REGISTERED 6716 STATE OF IDAHO PATRICK WAYNE BRAGASSA 4-5-05

FOR DRAWING INDEX SEE DRAWING NO. 628443	SUBCONTRACT NO. N/A	INEEL Idaho National Engineering & Environmental Laboratory BECHTEL BWXT IDAHO, LLC
SCALE: 1" = 20.0'	REQUESTER: G. Mc DANNEL	TAN
SCALE: 1" = 10.0'	DESIGN: P.W. BRAGASSA	TSF-09/18 V-TANKS REMEDIATION
DESIGN PHASE: AFC	DRAWN:	TANK REMOVAL
SAFETY CATEGORY: CG	PROJECT NO. 22901	TANK RIGGING PLAN – EXCAVATION TO TRANSPORTER
	SPCL CODE	SIZE D, CAGE CODE 01MF3, INDEX CODE NUMBER AREA 034 TYPE 0100 CL 02 ORG 090, DWG- 628459, REV 3
	FOR REVIEW/APPROVAL SIGNATURES SEE DAR NO. 113754	SCALE: NOTED, SHEET C-16
	EFFECTIVE DATE: 7/20/04	

File: 628459-3.dwg
Plotter: ASTAR_Wide-1 V-Tab
Date: 04/05/05 – 2:35 PM | Layout Name: Rigging Plan
Title II Design\Controlled Docs\628459
ID: EBR

REVISIONS		
REV	DESCRIPTION	EFFECTIVE DATE:
1	EXTENSIVE GENERAL REVISIONS SEE DAR-121830	4/5/05

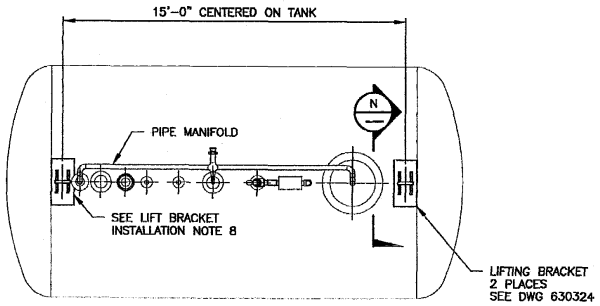

VIEW
SCALE: 3/8"=1'-0" (L)

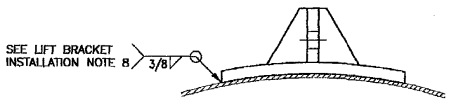

VIEW
SCALE: 1 1/2"=1'-0" (N)
2 PLACES

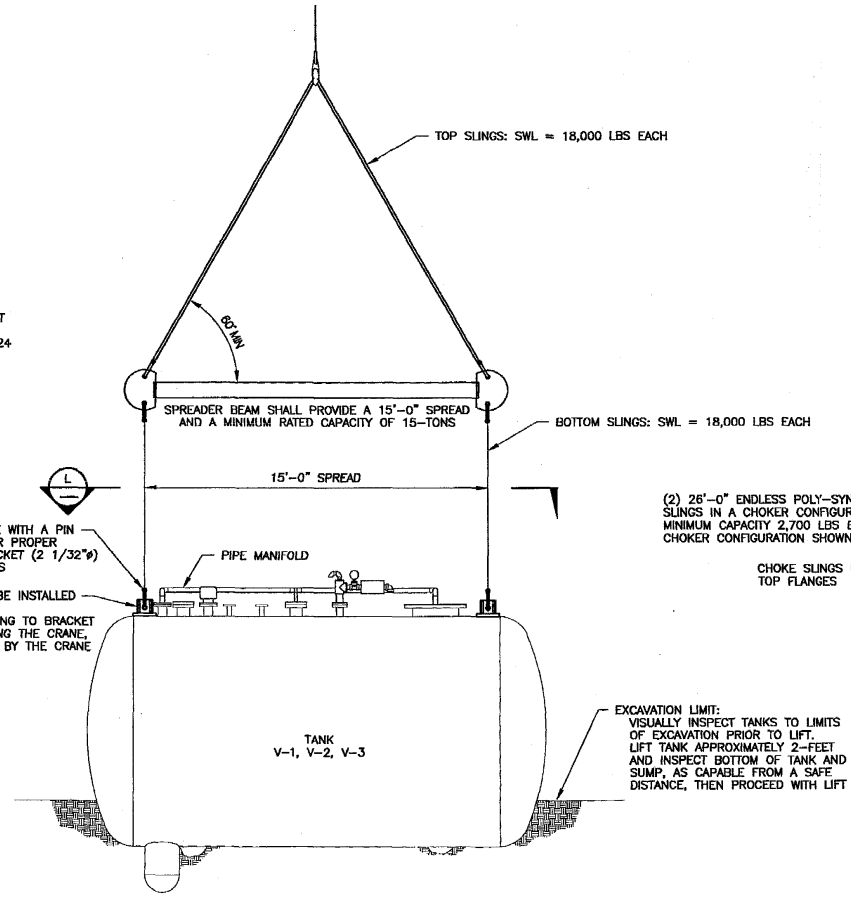

RIGGING FOR TANKS V-1, V-2, AND V-3
SCALE: 3/8"=1'-0"

NOTE: TANK EMPTY WEIGHT = 15,000 LBS
TANKS V-1, V-2 AND V-3 SHALL BE LIFTED FROM EXCAVATION AS FOLLOWS:
TANK WEIGHT + 6,000 LBS SOLIDIFICATION AGENT = 21,000 LBS

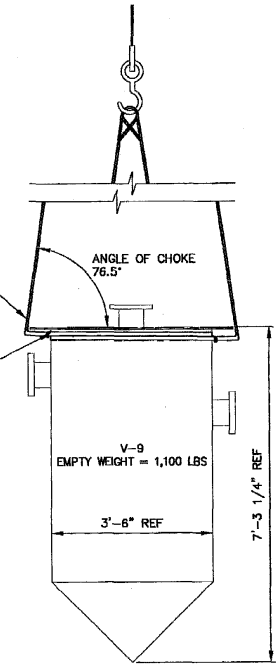

V-9 RIGGING
SCALE: 3/4"=1'-0"

LIFT BRACKET INSTALLATION NOTES:

1. LIFT BRACKET WELDING SHALL BE PERFORMED IN ACCORDANCE WITH AWS D1.6, THE INEEL WELD MANUAL AND SECTION 05060 OF SPC-555.
2. ALL WELDERS SHALL BE QUALIFIED AT THE INEEL WELDER TEST FACILITY FOR THE APPLICABLE PROCEDURES.
3. WELD PROCEDURES: USE INEEL WELD PROCEDURES CS 3.0, CS 3.04 OR CS 6.9 AS APPLICABLE.
4. FILLER MATERIAL: USE E309 OR AS DESIGNATED BY WELD PROCEDURE. ALL FILLER MATERIAL SHALL COMPLY WITH APPLICABLE REQUIREMENTS OF AWS D1.6 AND HAVE ACTUAL CERTIFIED MATERIAL TEST REPORTS (CMTR) ISSUED BY THE ORIGINAL MANUFACTURER.
5. VISUALLY INSPECT ALL WELDS IN ACCORDANCE WITH AWS D1.6. ACCEPTANCE CRITERIA SHALL BE IN ACCORDANCE WITH AWS D1.6 SECTION 6.28 QUALITY OF STATICALLY LOADED WELDS. IN ADDITION TO THE VISUAL INSPECTION, PERFORM A LIQUID PENETRANT EXAMINATION OF THE WELDS CONNECTING THE BRACKET TO THE TANK WALL. ACCEPTANCE CRITERIA SHALL BE IN ACCORDANCE WITH AWS D1.6 SECTION 6.28
6. SURFACE PREPARATION: THE WELD JOINT AND SURROUNDING METAL FOR AT LEAST 2-INCHES SHALL BE CLEANED BEFORE WELDING. CLEANING SHALL BE ACCOMPLISHED BY BRUSHING WITH A CLEAN STAINLESS BRUSH AND BY SCRUBBING WITH A CLEAN LINT-FREE CLOTH MOISTENED WITH AN APPROVED LOW (LESS THAN 35 PPM) CHLORIDE OR CHLORIDE FREE SOLVENT. REMOVE ALL VISIBLE WELD SPLATTER, FLUX, ARC-STRIKES AND SCALE. FINAL CLEANING SHALL BE PERFORMED AFTER INSPECTION IS COMPLETE.
7. WELD REPAIRS: DEFECTS SHALL BE COMPLETELY REMOVED BY GRINDING OR OTHER APPROVED METHOD TO CLEAN TO SOUND METAL. EXCAVATED AREAS SHALL BE MT OR PT INSPECTED BY ASNT-TC-1A CERTIFIED PERSONNEL TO ASSUE DEFECT REMOVAL. REPAIRS TO CORRECT WELD DEFECTS SHALL BE MADE USING THE SAME PROCEDURE USED FOR THE ORIGINAL WELD. NO MORE THAN TWO (2) REPAIR ATTEMPTS WILL BE ALLOWED ON ANY ONE WELD.
8. WELD MAY BE OMITTED UP TO 6-INCHES WHERE INTERFERENCE WITH 4" PIPE AND FLANGE PREVENT OR RESTRICT WELDING.

NOTES:

1. USE DYNAMOMETER TO VERIFY ALL LIFTS.
2. REMOVED
3. REMOVED
4. REMOVED
5. VISUALLY INSPECT TANKS, PRIOR TO LIFTING, FOR CRACKS, CORROSION, OR DAMAGE. DAMAGED AREAS, IF PRESENT, SHALL BE EVALUATED BY ENGINEERING PRIOR TO LIFTING. ALLOWABLE CORROSION LIMIT OF 1/8" IS ACCEPTABLE.

PROFESSIONAL ENGINEER REGISTERED 6716 STATE OF IDAHO PATRICK WAYNE BRAGASSA 11-5-05

FOR DRAWING INDEX SEE DRAWING NO. 628443	SUBCONTRACT NO. N/A	INEEL (Idaho National Engineering & Environmental Laboratory) BECHTEL BWXT IDAHO, LLC
SCALE: 3/8" = 1'-0" / SCALE: 3/4" = 1'-0"	REQUESTER: G. Mc DANNEL	TAN
	DESIGN: P BRAGASSA	TSF-09/18 V-TANKS REMEDIATION
	DRAWN: J MONCUR	RIGGING DETAILS AND SECTIONS
	PROJECT NO. 22901	
	SPCL CODE	
DESIGN PHASE: AFC	FOR REVIEW/APPROVAL SIGNATURES SEE DAR NO. 113754	SIZE D · CAGE CODE 01MF3 · INDEX CODE NUMBER AREA 034 TYPE 9999 O 02 ORG 090 · DWG-628461 · REV 1
SAFETY CATEGORY: CG	EFFECTIVE DATE: 7/20/04	SCALE: NONE · SHEET C-18

FMT-01-REV 3.4
Date: 04/08/05 - 7:45 AM | Layout Name: 628461-1
Title # Design\Controlled DWG\B8549 | D: EBR
File: 628461-1.dwg
Path: K:\TAN WAG-1 V-Tan

REVISIONS		
REV	DESCRIPTION	EFFECTIVE DATE:
1	SEE DAR-116001	11/17/04

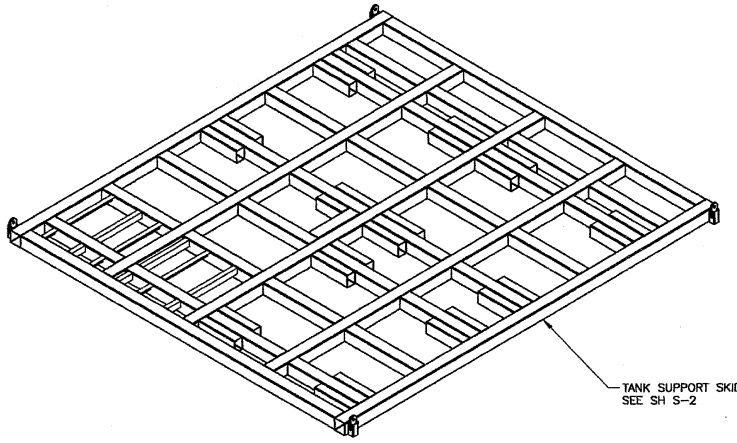

TANK SUPPORT SKID
ISOMETRIC VIEW
SCALE: NONE

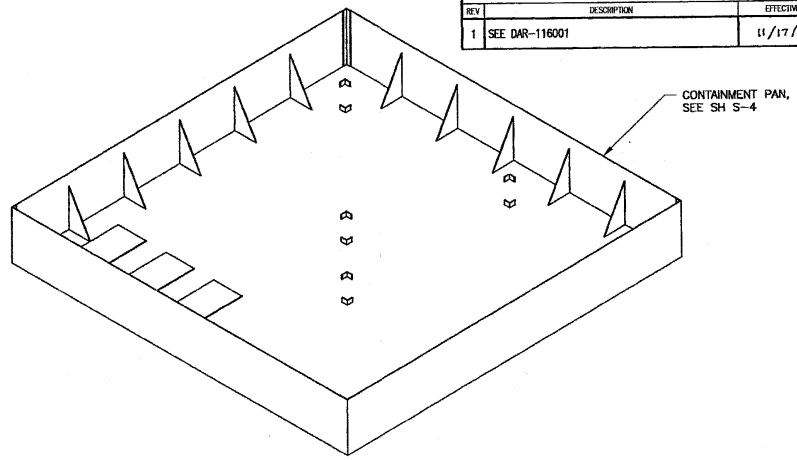

CONTAINMENT PAN
ISOMETRIC VIEW
SCALE: NONE

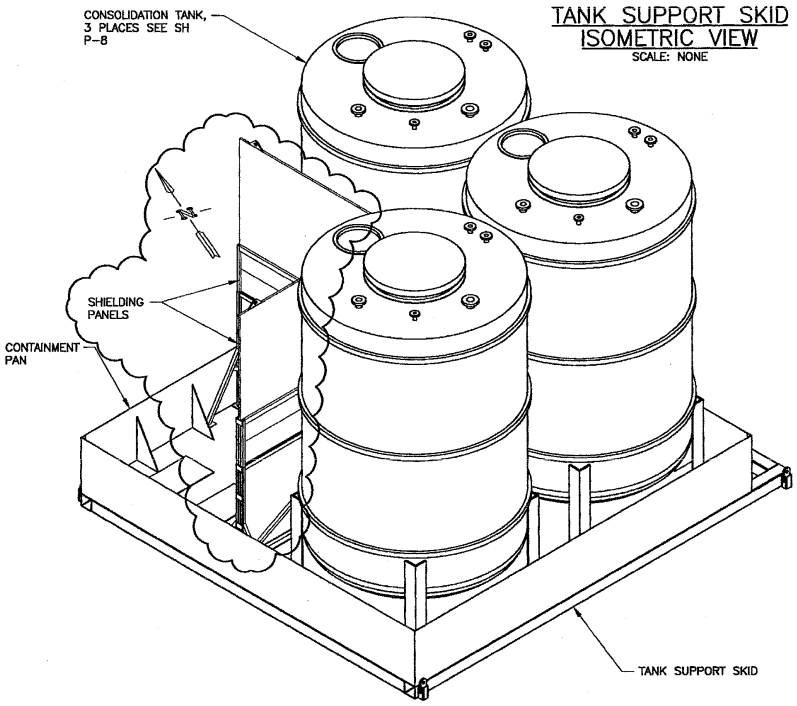

TANK, CONTAINMENT PAN, AND TANK SUPPORT SKID
ISOMETRIC VIEW
SCALE: NONE

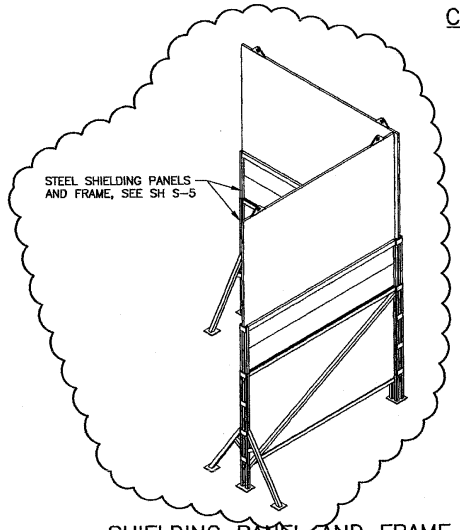

SHIELDING PANEL AND FRAME
ISOMETRIC VIEW
SCALE: NONE

NOTES

1. CONSOLIDATION TANKS ARE NOT ATTACHED TO THE CONTAINMENT PAN. LOCATION GUIDES AS SHOWN ON SH S-4 ARE USED TO POSITION TANKS IN CONTAINMENT PAN.
2. CONTAINMENT PAN SHALL BE WELDED TO THE TANK SUPPORT SKID AS INDICATED ON SH S-2.
3. SUPPORT FRAME FOR SHIELDING PANELS IS DESIGNED TO ALLOW SHIELDING PANELS TO BE LIFTED IN AND OUT OF FRAME. FRAME SHALL BE WELDED TO THE CONTAINMENT PAN AS INDICATED ON SH S-4 AFTER PAN HAS BEEN MOUNTED ON SKID.
4. THE TANK SUPPORT SKID AND CONTAINMENT PAN ARE NOT DESIGNED TO BE LIFTED WITH CONSOLIDATION TANKS AND SHIELDING PANELS.

PROFESSIONAL ENGINEER REGISTERED 5629 11-16-04 STATE OF IDAHO RANDY F. LIPPERT

FOR DRAWING INDEX SEE DRAWING NO. 628443	SUBCONTRACT NO. N/A	INEEL (Idaho National Engineering & Environmental Laboratory) BECHTEL BWXT IDAHO, LLC
NO SCALE	REQUESTER: G. Mc DANNEL DESIGN: R.F. Lippert DRAWN: S.Kutterer PROJECT NO. 22901 SPCL CODE	TAN TSF-09/18 V-TANKS REMEDIATION ISOMETRIC VIEWS
DESIGN PHASE: AFC	FOR REVIEW/APPROVAL SIGNATURES SEE DAR NO. 113657	SIZE D · CAGE CODE 01MF3 · INDEX CODE NUMBER AREA 034 TYPE 1748 CL 61 OSC 090 · DWG- 628462 · REV 1
SAFETY CATEGORY: CG	EFFECTIVE DATE: 7/15/04	SCALE: NOTED · SHEET S-1

File: 628462-1.dwg Path: K:\TAN WAG-1 V-1 Date: 10/20/04 - 10:16 A.M. Layout Name: S-01 Title II Design\Controlled DWG\ROUND2 ID: SEA

REVISIONS		
REV	DESCRIPTION	EFFECTIVE DATE
1	SEE DAR-116001	11/17/04

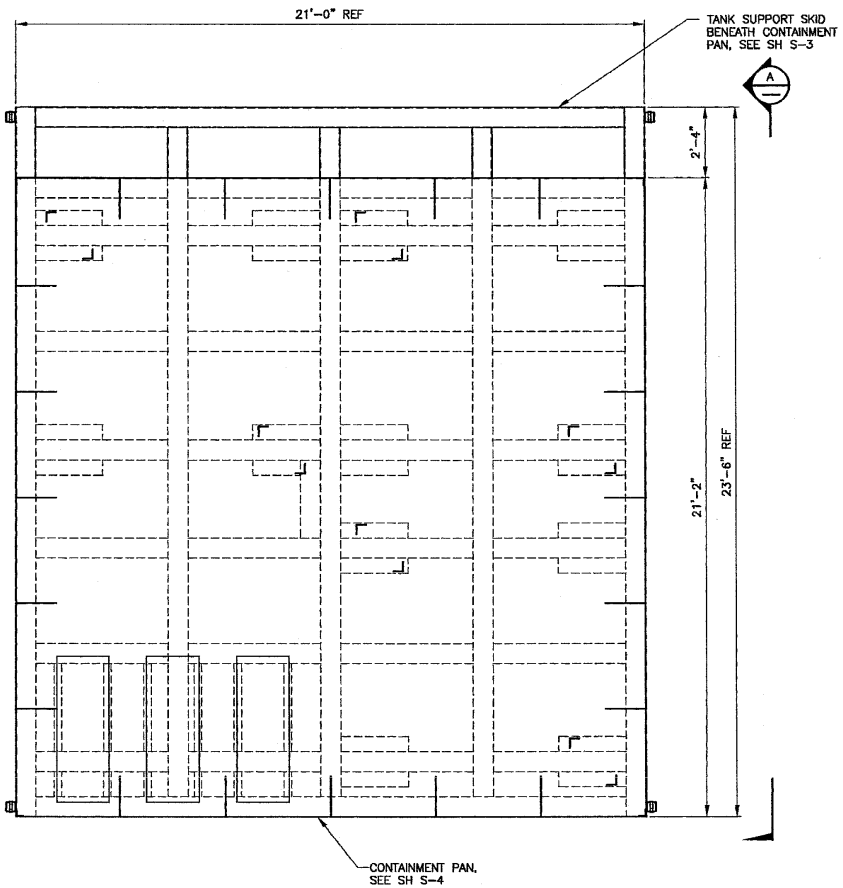

TANK SUPPORT SKID AND CONTAINMENT PAN PLAN
SCALE: 1/2"=1'-0"

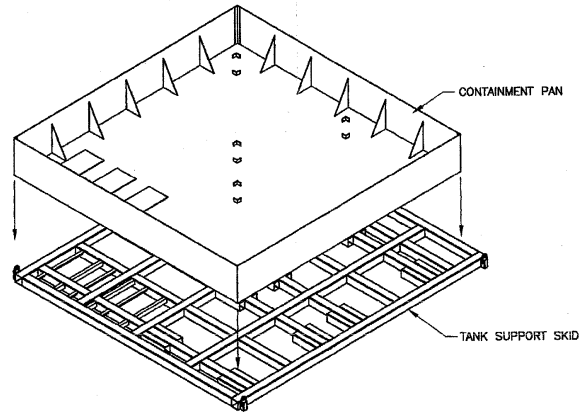

EXPLODED ISOMETRIC VIEW
SCALE: NONE

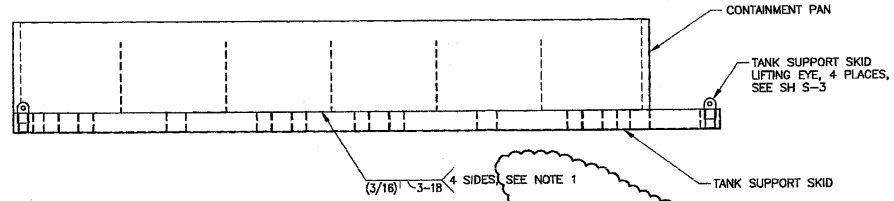

VIEW A
SCALE: 1/2"=1'-0"

NOTES

1. TACK WELD PAN BOTTOM TO SKID AS REQUIRED TO ELIMINATE BUBBLING OF PAN BOTTOM.

FOR DRAWING INDEX SEE DRAWING NO. 628443	SUBCONTRACT NO. N/A	INEEL Idaho National Engineering & Environmental Laboratory BECHTEL BWXT IDAHO, LLC
SCALE: 1/2" = 1'-0"	REQUESTER: G. Mc DANNEL	TAN
	DESIGN: R.F. Lippert	TSF-09/18 V-TANKS REMEDIATION TANK SUPPORT SKID AND CONTAINMENT PAN PLAN AND VIEWS
	DRAWN: S.Kutterer	
	PROJECT NO. 22901	
	SPCL CODE	
DESIGN PHASE: AFC	FOR REVIEW/APPROVAL SIGNATURES SEE DAR NO. 113657	SIZE D / CAGE CODE 01MF3 / INDEX CODE NUMBER AREA 034 TYPE 1748 DL 61 DBD 090 / DWG- 628463 / REV 1
SAFETY CATEGORY: CG	EFFECTIVE DATE: 7/15/04	SCALE: NOTED / SHEET S-2

PROFESSIONAL ENGINEER REGISTERED 5629 11-16-04 STATE OF IDAHO RANDY F. LIPPERT

FWT-01-REV 3.4

File: 628463-1.dwg
Path: K:\Dwg_Work\1 V-
Date: 10/28/04 - 3:15 P.M. | Layout Name: S-02
File: K:\Dwg_Controlled\PWO\R0\002
ID: KJ1

REVISIONS		
REV	DESCRIPTION	EFFECTIVE DATE:
1	SEE DAR-114333	8/23/04
2	SEE DAR-116001	11/17/04

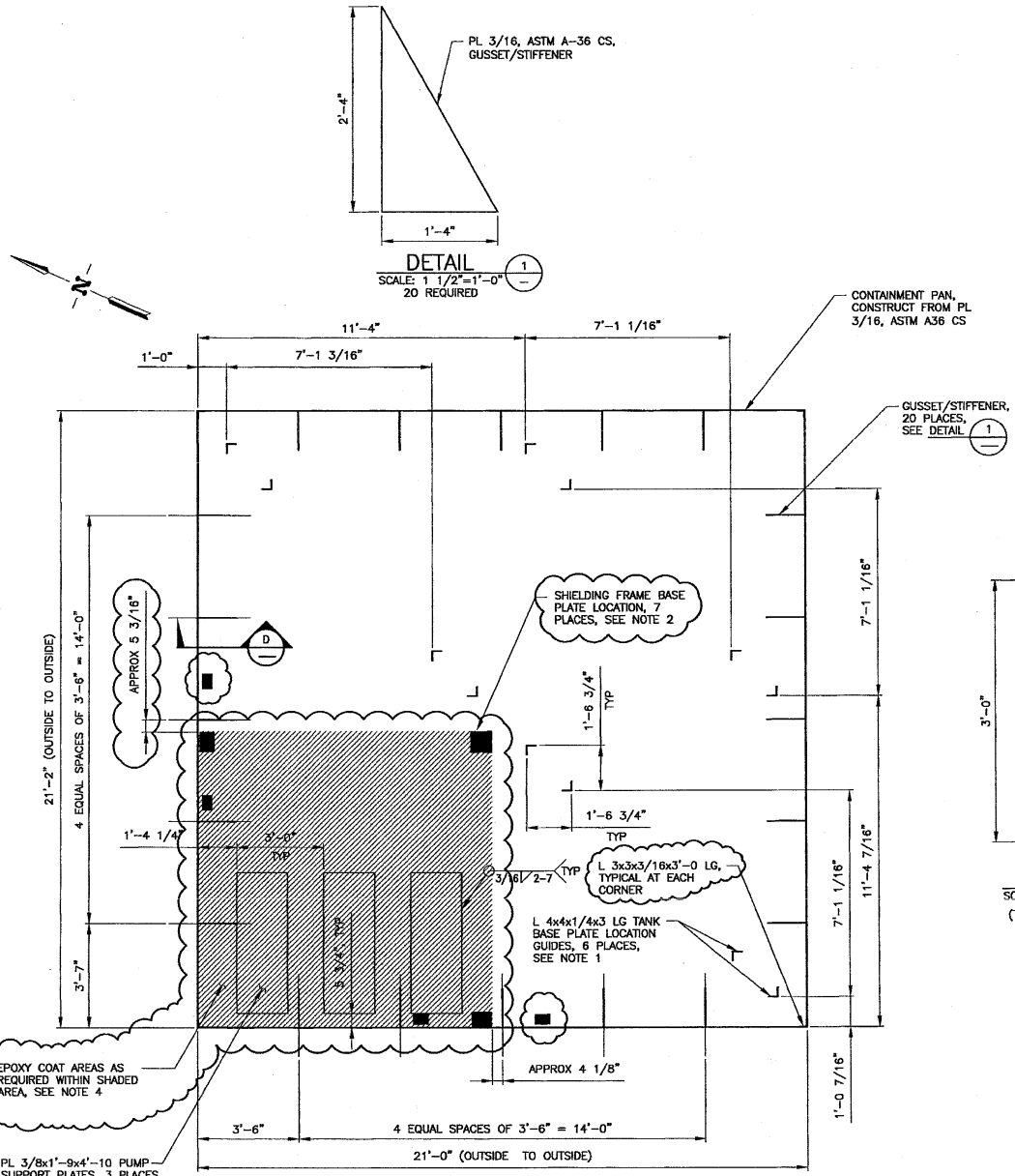

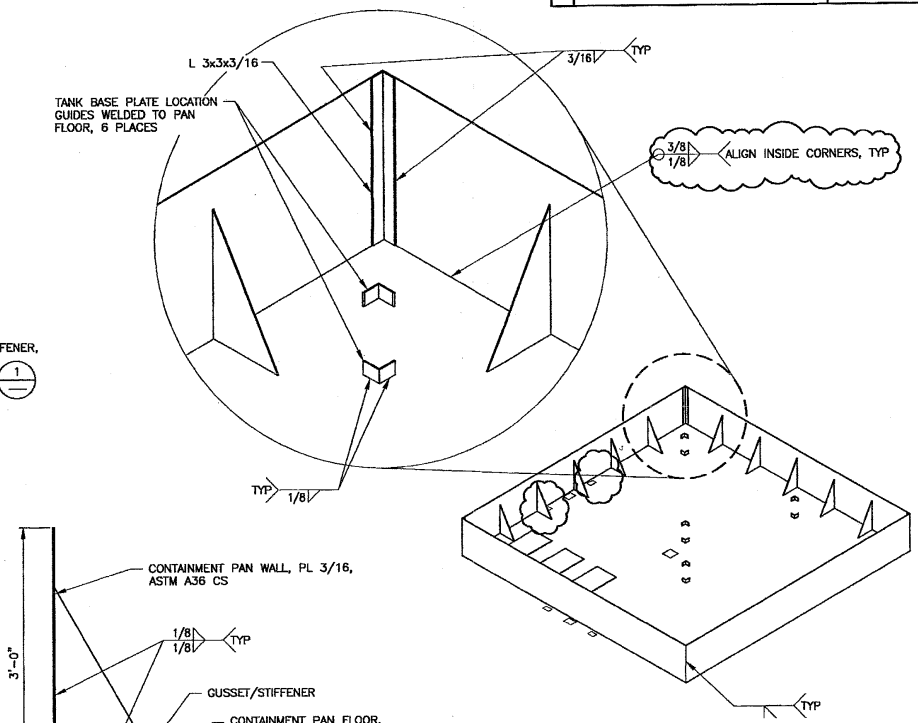

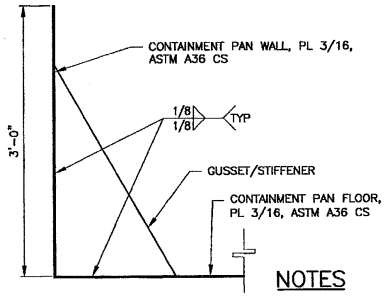

NOTES

1. TANK BASE PLATE GUIDE LOCATIONS ARE BASED ON 1'-6" SQUARE TANK BASE PLATES AND PRELIMINARY TANK INFORMATION. LOCATIONS OF THE GUIDES SHALL BE ADJUSTED AS REQUIRED IF THE DIMENSIONS AND/OR LOCATIONS OF THE BASE PLATES DIFFER. COORDINATE PLACEMENT OF THE GUIDES WITH FINAL TANK BASE PLATE DIMENSIONS AND LOCATIONS.
2. SHIELDING SUPPORT FRAME BASE PLATES SHALL BE SECURED IN PLACE AFTER PLACEMENT OF CONTAINMENT PAN IN FIELD, SECURE WITH A 3/16 FILLET WELDS 1 1/2" LONG 3" OC, ALL AROUND EACH BASE PLATE. SEE SH S-5 FOR SHIELDING SUPPORT FRAME.
3. PLATES USED IN THE FABRICATION OF PAN SHALL BE FASTENED TOGETHER USING A FULL PENETRATION GROOVE WELD (SEAL WELD) AND GROUND SMOOTH.
4. COAT AREAS AS REQUIRED WITH CARBOGUARD 890LT EPOXY COATING BY "CARBOLINE COMPANY". APPLY ONE COAT AS PRIMER AND ONE COAT AS FINISH, USING MANUFACTURER'S RECOMMENDED THICKNESS. PREPARE SURFACES TO BE COATED AS RECOMMENDED BY THE MANUFACTURER.

PROFESSIONAL ENGINEER 5629 STATE OF IDAHO RANDY F. LIPPERT

FOR DRAWING INDEX SEE DRAWING NO. 628443	SUBCONTRACT NO. N/A	INEEL — Idaho National Engineering & Environmental Laboratory — BECHTEL BWXT IDAHO, LLC
SCALE: 1/2" = 1'-0"	REQUESTER: G. Mc DANNEL	TAN
SCALE: 1 1/2" = 1'-0"	DESIGN: R.F. Lippert	TSF-09/18 V-TANKS REMEDIATION
	DRAWN: S.Kutterer	CONTAINMENT PAN PLANS, SECTION, AND DETAILS
	PROJECT NO. 22901	
	SPCL CODE	
DESIGN PHASE: AFC	FOR REVIEW/APPROVAL SIGNATURES SEE DAR NO. 113657	SIZE D; CASE CODE 01MF3; INDEX CODE NUMBER AREA 034 TYPE 1748 CL 61 DESG 090; DWG- 628465; REV 2
SAFETY CATEGORY: CG	EFFECTIVE DATE: 7/15/04	SCALE: NOTED; SHEET S-4

FMT-01-REV 3.4

Date: 11/18/04 — 11:27 AM | Layout Name: S-04
JT: Title B Sheet (Controlled Drwg) | Model:
File: 628465-2.dwg
Plot: 8.5x11 W/Ref=1 V=1

REVISIONS		
REV	DESCRIPTION	EFFECTIVE DATE:
4	SEE DAR-124326	6/21/05

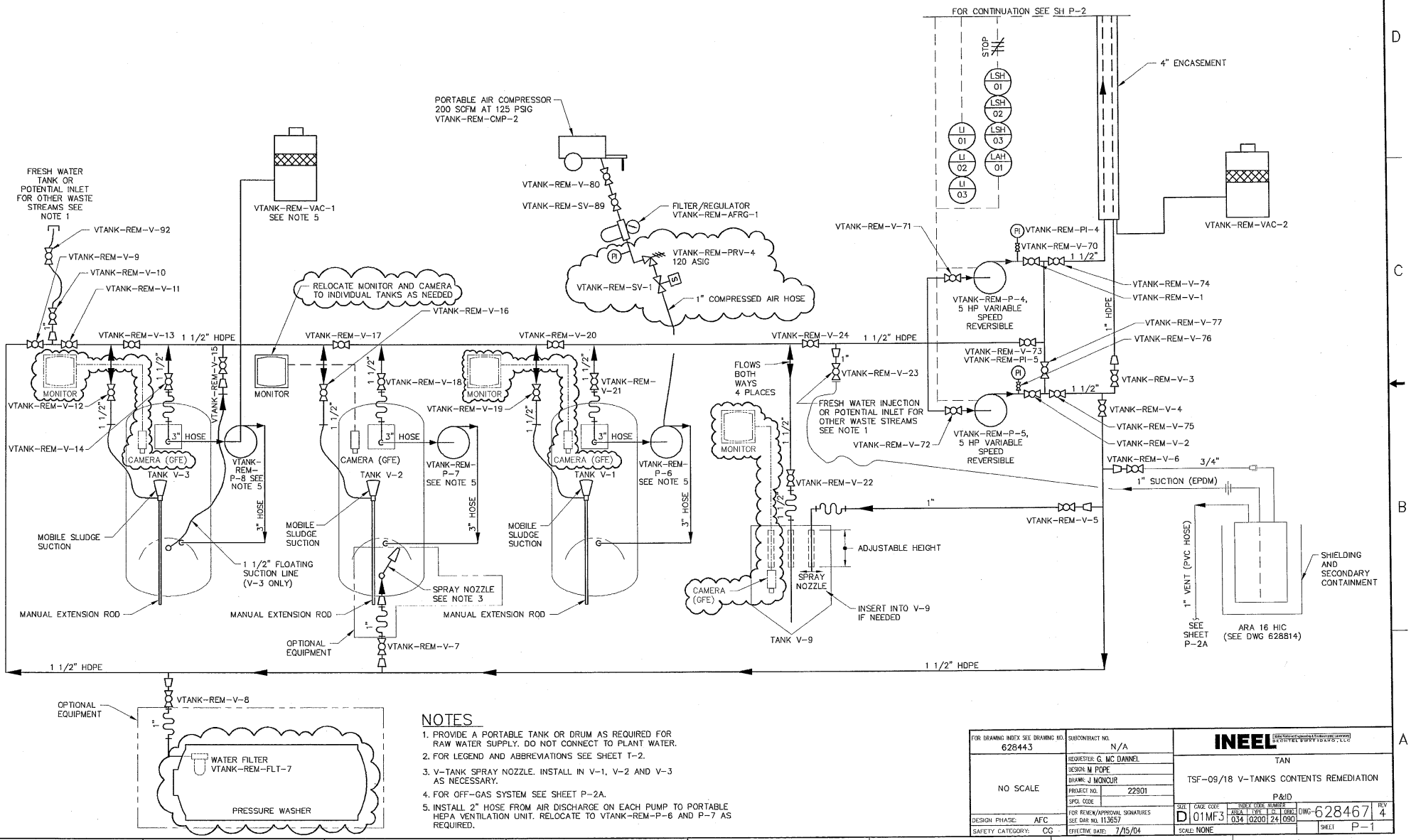

NOTES

1. PROVIDE A PORTABLE TANK OR DRUM AS REQUIRED FOR RAW WATER SUPPLY. DO NOT CONNECT TO PLANT WATER.
2. FOR LEGEND AND ABBREVIATIONS SEE SHEET T-2.
3. V-TANK SPRAY NOZZLE. INSTALL IN V-1, V-2 AND V-3 AS NECESSARY.
4. FOR OFF-GAS SYSTEM SEE SHEET P-2A.
5. INSTALL 2" HOSE FROM AIR DISCHARGE ON EACH PUMP TO PORTABLE HEPA VENTILATION UNIT. RELOCATE TO VTANK-REM-P-6 AND P-7 AS REQUIRED.

FOR DRAWING INDEX SEE DRAWING NO. 628443	SUBCONTRACT NO. N/A	INEEL
NO SCALE	REQUESTER: G. MC DANNEL DESIGN: M POPE DRAWN: J MONCUR PROJECT NO. 22901 SPCL CODE	TAN TSF-09/18 V-TANKS CONTENTS REMEDIATION P&ID
DESIGN PHASE: AFC SAFETY CATEGORY: CG	FOR REVIEW/APPROVAL SIGNATURES SEE DAR NO. 113657 EFFECTIVE DATE: 7/15/04	SIZE D · CAGE CODE 01MF3 · INDEX CODE NUMBER AREA 034 TYPE 0200 CL 24 OBJ 090 · DWG-628467 · REV 4 SCALE: NONE · SHEET P-1

File: 628467-4.dwg
Path: P:\V-TANK_ds-bu
Date: 06/21/05 - 2:42 PM
Layout Name: Schematic
ID: EBR

REVISIONS		
REV	DESCRIPTION	EFFECTIVE DATE:
4	SEE DAR-124326	6/21/05

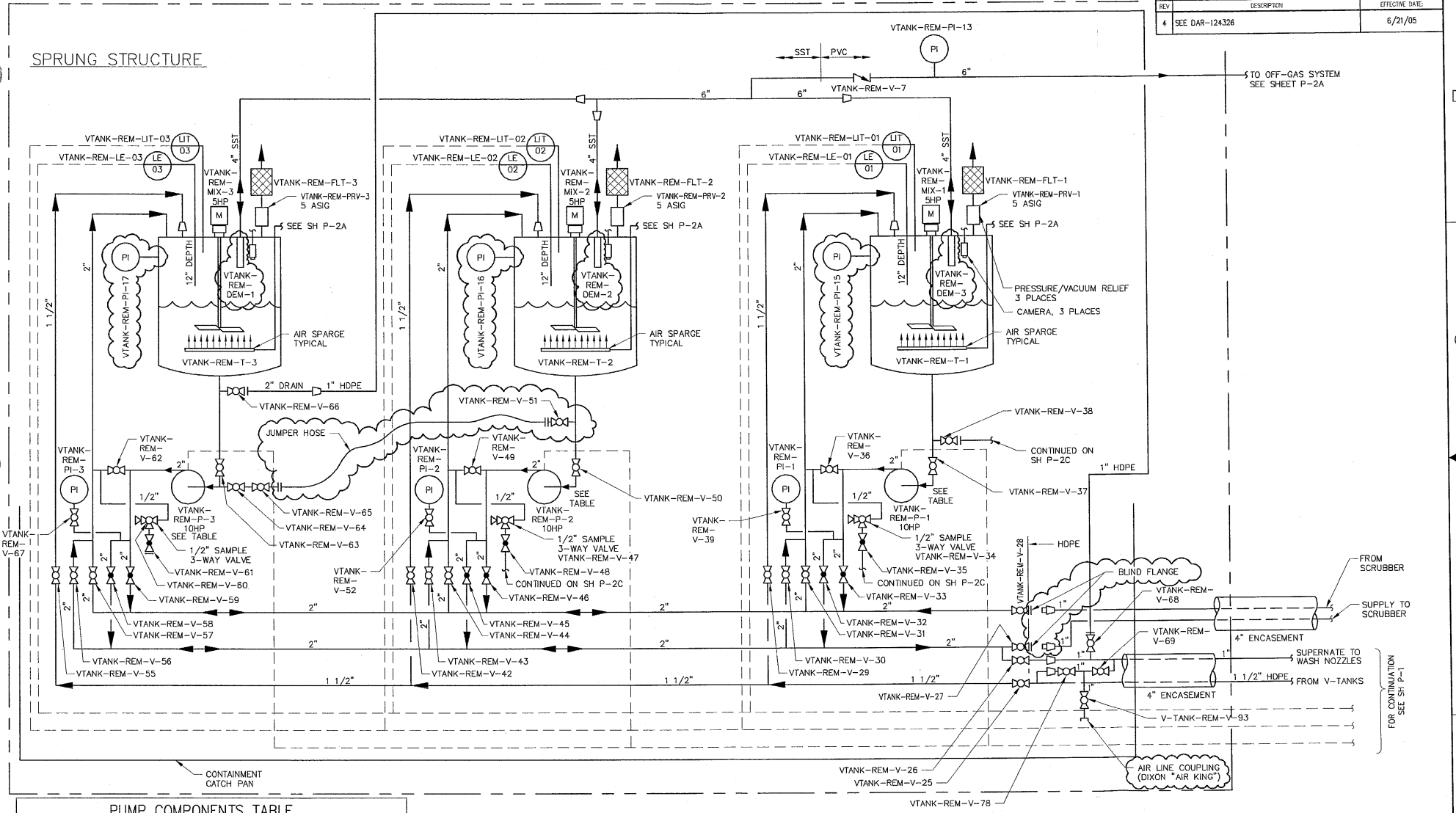

PUMP COMPONENTS TABLE

COMPONENT	VTANK-REM-P-1	VTANK-REM-P-2	VTANK-REM-P-3
AIR RECEIVER	VTANK-REM-VES-1	VTANK-REM-VES-2	VTANK-REM-VES-3
RECEIVER PI	VTANK-REM-PI-1A	VTANK-REM-PI-2A	VTANK-REM-PI-3A
INLET VALVE	VTANK-REM-V-1A	VTANK-REM-V-2A	VTANK-REM-V-3A
OUTLET VALVE	VTANK-REM-V-1B	VTANK-REM-V-2B	VTANK-REM-V-3B

NOTES

1. FOR NOTES SEE SHEET P-1.
2. OFF-GAS SYSTEM WILL PROVIDE HEPA FILTRATION AND GRANULATED ACTIVATED CARBON FILTRATION IN ADDITION TO CONDITIONING THE GAS STREAM.

FOR DRAWING INDEX SEE DRAWING NO. 628443	SUBCONTRACT NO. N/A	INEEL (DOE's Idaho National Engineering & Environmental Laboratory) BECHTEL BWXT IDAHO, LLC
NO SCALE	REQUESTER: G. Mc DANNEL DESIGN: M POPE DRAWN: J MONCUR PROJECT NO. 22901 SPCL CODE	TAN TSF-09/18 V-TANKS CONTENTS REMEDIATION P&ID
DESIGN PHASE: AFC	FOR REVIEW/APPROVAL SIGNATURES SEE DAR NO. 113657	SIZE D; CADE CODE 01MF3; INDEX CODE NUMBER AREA 034 TYPE 0200 SQ 24 DISC 090; DWG 628468; REV 4
SAFETY CATEGORY: CG	EFFECTIVE DATE: 7/15/04	SCALE: NONE; SHEET P-2

FMT-D1-REV 3.4
Date: 06/21/05 - 2:40 PM | Layout Name: Schematic | ID: EBR
File: 628468-A.dwg
Path: F:\V-TANK_as-built

REVISIONS		
REV	DESCRIPTION	EFFECTIVE DATE:
1	SEE DAR – 116001	11/17/04

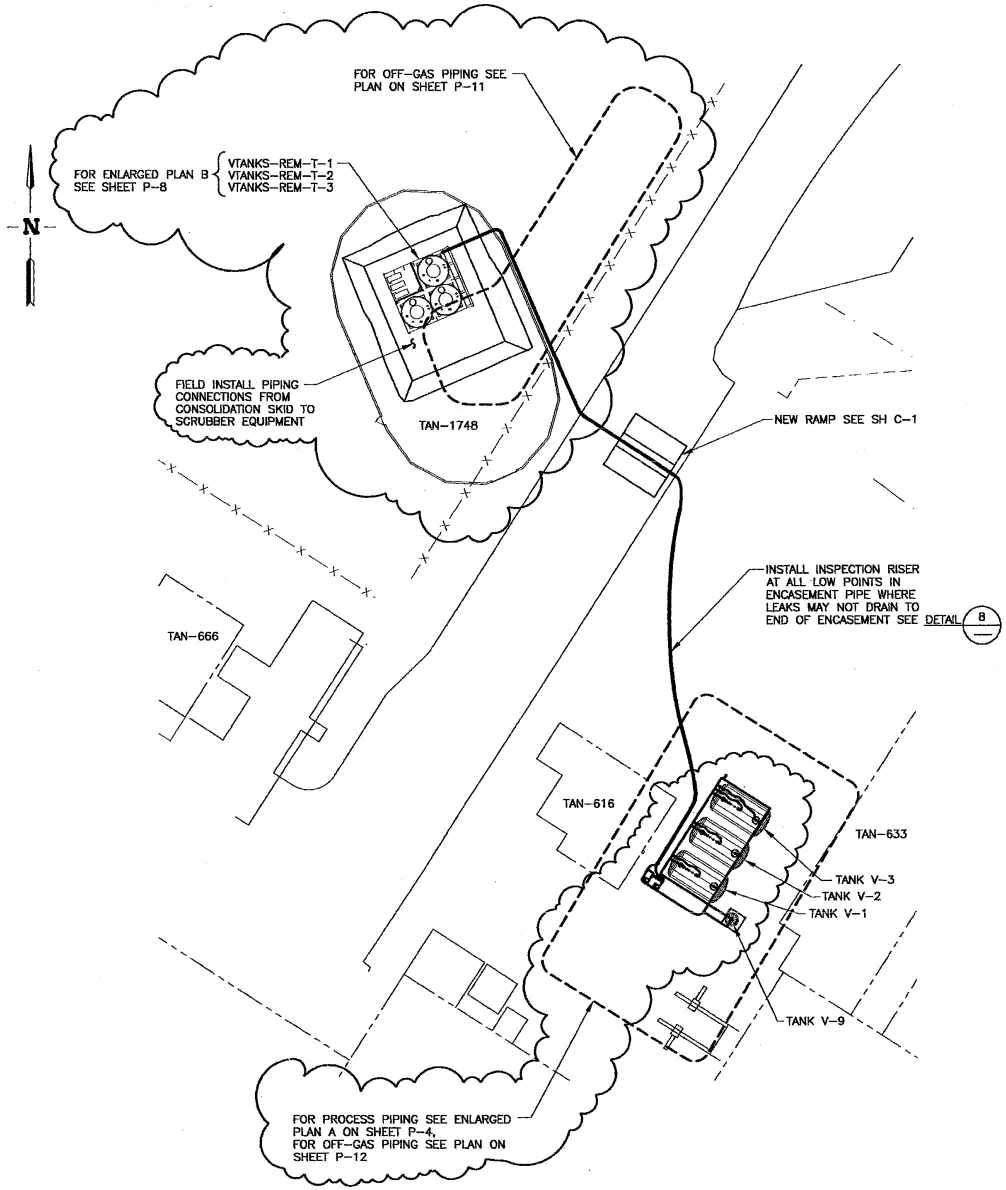

SITE PLAN
SCALE: 1"=20.0'

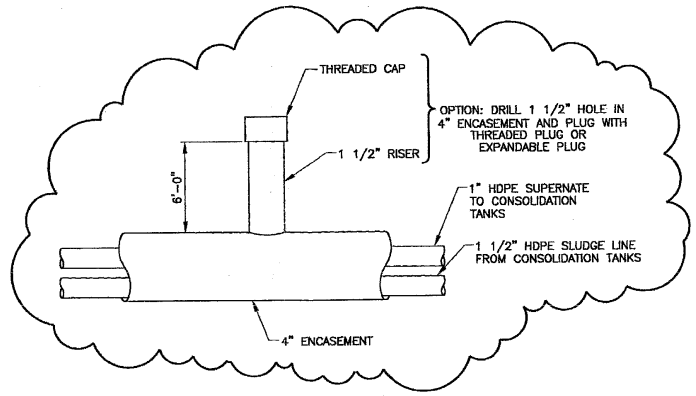

DETAIL 8

FOR DRAWING INDEX SEE DRAWING NO. 628443	SUBCONTRACT NO. N/A	INEEL	
SCALE: 1" = 20.0'	REQUESTER: G. Mc DANNEL	TAN	
	DESIGN: M POPE	TSF-09/18 V-TANKS CONTENTS REMEDIATION	
	DRAWN: J MONCUR	SITE PLAN	
	PROJECT NO. 22901		
	SPCL CODE		
INDEX CODE NUMBER: AREA 034, TYPE 1748, CL 52, ORIG 090	DESIGN PHASE: AFC	SIZE D	CAGE CODE 01MF3
	SAFETY CATEGORY: CG	INDEX CODE NUMBER: AREA 034, TYPE 0200, CL 52, ORIG 090	DWG-628469 REV 1
	FOR REVIEW/APPROVAL SIGNATURES SEE DAR NO. 113754	SCALE: NOTED	SHEET P-3
	EFFECTIVE DATE: 7/20/04		

PROFESSIONAL ENGINEER REGISTERED 6263 11/16/04 STATE OF IDAHO MARK I. POPE

File: 628469-1.dwg Path: X:\TAN WAG-1 V-T Date: 11/11/04 – 3:16 P.M. Layout Name: Site-Plan Title II Design\Controlled DWG\ROUND2 ID: MXJ

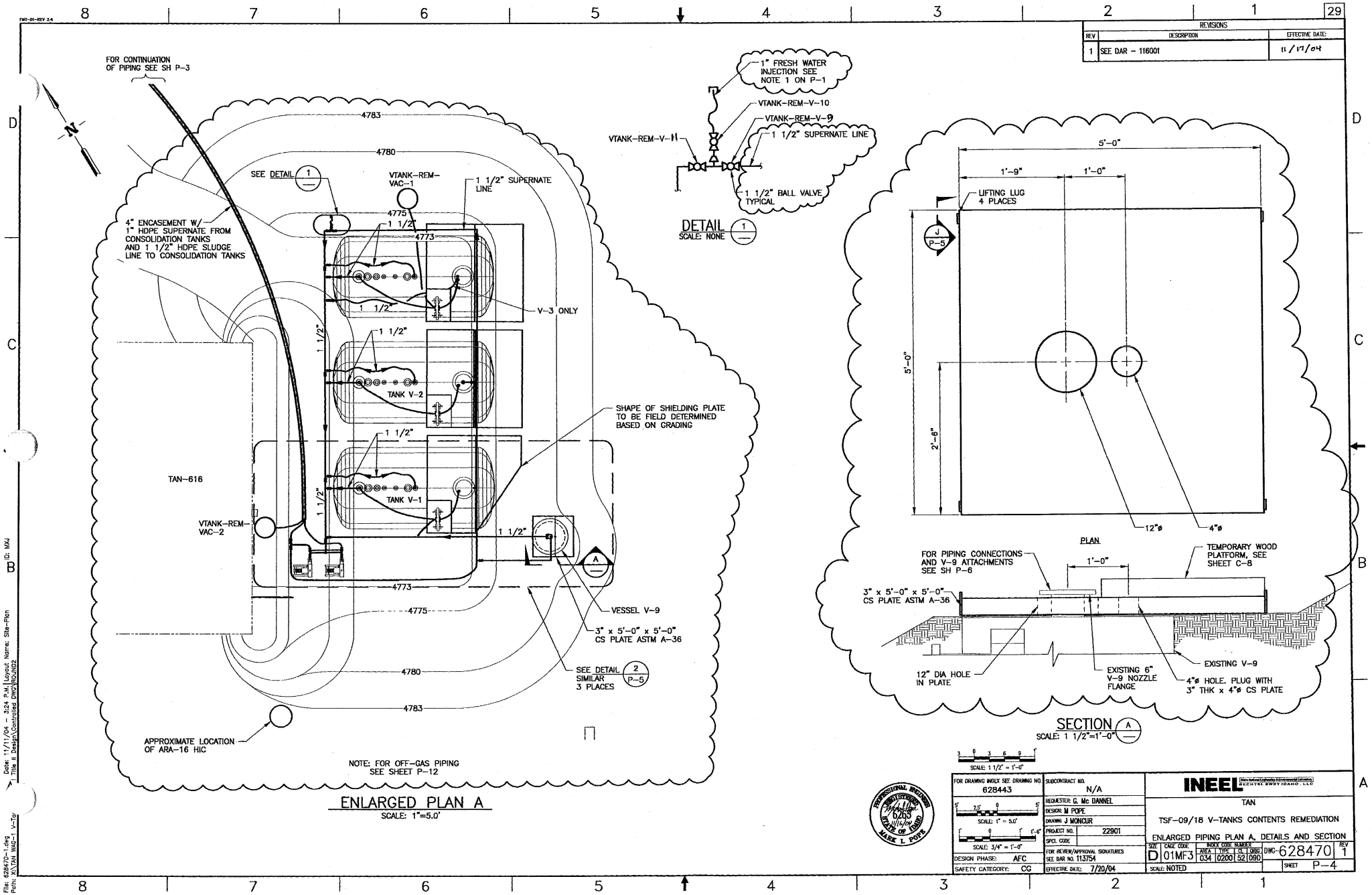

29
REVISIONS
REV | DESCRIPTION | EFFECTIVE DATE:
1 | SEE DAR - 116001 | 11/17/04
FOR CONTINUATION OF PIPING SEE SH P-3
4783
4780
SEE DETAIL 1
VTANK-REM-VAC-1
1 1/2" SUPERNATE LINE
4775
1 1/2"
4773
4" ENCASEMENT W/ 1" HDPE SUPERNATE FROM CONSOLIDATION TANKS AND 1 1/2" HDPE SLUDGE LINE TO CONSOLIDATION TANKS
V-3 ONLY
TANK V-2
TANK V-1
SHAPE OF SHIELDING PLATE TO BE FIELD DETERMINED BASED ON GRADING
TAN-616
VTANK-REM-VAC-2
VESSEL V-9
3" x 5'-0" x 5'-0" CS PLATE ASTM A-36
SEE DETAIL 2 P-5 SIMILAR 3 PLACES
APPROXIMATE LOCATION OF ARA-16 HIC
NOTE: FOR OFF-GAS PIPING SEE SHEET P-12
ENLARGED PLAN A
SCALE: 1"=5.0'
1" FRESH WATER INJECTION SEE NOTE 1 ON P-1
VTANK-REM-V-10
VTANK-REM-V-9
VTANK-REM-V-11
1 1/2" SUPERNATE LINE
1 1/2" BALL VALVE TYPICAL
DETAIL 1
SCALE: NONE
5'-0"
1'-9"
1'-0"
LIFTING LUG 4 PLACES
J P-5
2'-6"
12"ø
4"ø
PLAN
FOR PIPING CONNECTIONS AND V-9 ATTACHMENTS SEE SH P-6
TEMPORARY WOOD PLATFORM, SEE SHEET C-8
3" x 5'-0" x 5'-0" CS PLATE ASTM A-36
12" DIA HOLE IN PLATE
EXISTING 6" V-9 NOZZLE FLANGE
EXISTING V-9
4"ø HOLE. PLUG WITH 3" THK x 4"ø CS PLATE
SECTION A
SCALE: 1 1/2"=1'-0"
SCALE: 1 1/2" = 1'-0"
PROFESSIONAL ENGINEER REGISTERED 6263 STATE OF IDAHO MARK L. POPE
FOR DRAWING INDEX SEE DRAWING NO. 628443
SCALE: 1" = 5.0'
SCALE: 3/4" = 1'-0"
DESIGN PHASE: AFC
SAFETY CATEGORY: CG
SUBCONTRACT NO. N/A
REQUESTER: G. Mc DANNEL
DESIGN: M POPE
DRAWN: J MONCUR
PROJECT NO. 22901
SPCL CODE
FOR REVIEW/APPROVAL SIGNATURES SEE BAR NO. 113754
EFFECTIVE DATE: 7/20/04
INEEL
TAN
TSF-09/18 V-TANKS CONTENTS REMEDIATION
ENLARGED PIPING PLAN A, DETAILS AND SECTION
SIZE D | CAGE CODE 01MF3 | INDEX CODE NUMBER AREA 034 TYPE 0200 CL 52 ORIG 090 | DWG-628470 | REV 1
SCALE: NOTED | SHEET P-4

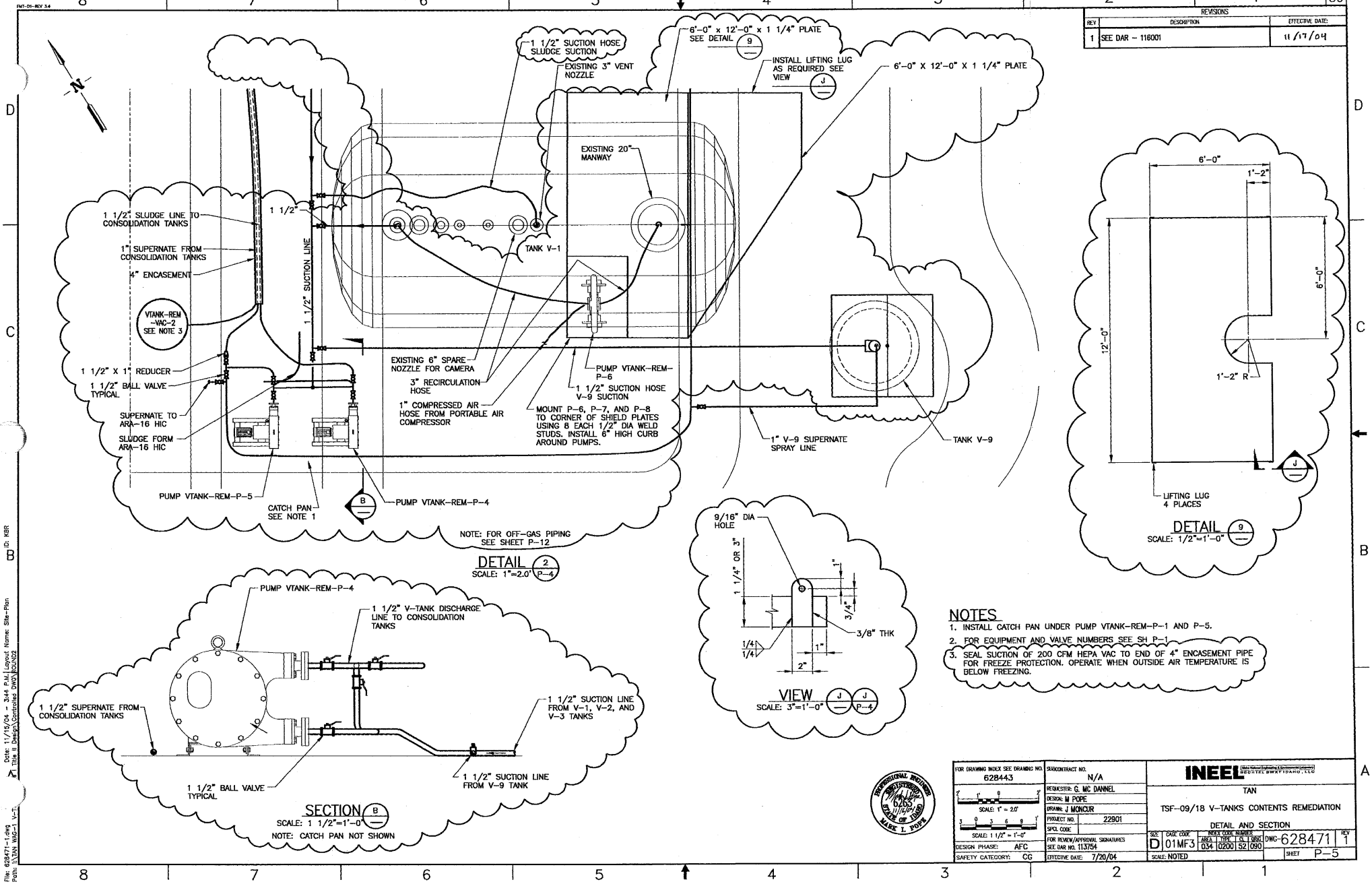

NOTES

1. INSTALL CATCH PAN UNDER PUMP VTANK-REM-P-1 AND P-5.
2. FOR EQUIPMENT AND VALVE NUMBERS SEE SH P-1
3. SEAL SUCTION OF 200 CFM HEPA VAC TO END OF 4" ENCASEMENT PIPE FOR FREEZE PROTECTION. OPERATE WHEN OUTSIDE AIR TEMPERATURE IS BELOW FREEZING.

REVISIONS		
REV	DESCRIPTION	EFFECTIVE DATE:
1	SEE DAR - 116001	11/17/04

FOR DRAWING INDEX SEE DRAWING NO. 628443	SUBCONTRACT NO. N/A	INEEL
SCALE: 1" = 2.0'	REQUESTER: G. MC DANNEL	TAN
SCALE: 1 1/2" = 1'-0"	DESIGN: M POPE	TSF-09/18 V-TANKS CONTENTS REMEDIATION
	DRAWN: J MONCUR	DETAIL AND SECTION
	PROJECT NO. 22901	
	SPCL CODE	
DESIGN PHASE: AFC	FOR REVIEW/APPROVAL SIGNATURES SEE DAR NO. 113754	SIZE D · CAGE CODE 01MF3 · INDEX CODE NUMBER AREA 034 TYPE 0200 CL 52 ORG 090 · DWG-628471 · REV 1
SAFETY CATEGORY: CG	EFFECTIVE DATE: 7/20/04	SCALE: NOTED · SHEET P-5

PROFESSIONAL ENGINEER REGISTERED 6263 STATE OF IDAHO MARK I. POPE

File: 628471-1.dwg Path: I:\TAN WAG-1 V-T... Date: 11/15/04 - 3:44 P.M. Layout Name: Site-Plan Title II Design\Controlled DWG\ROUND2 ID: KBR

REVISIONS		
REV	DESCRIPTION	EFFECTIVE DATE:
1	SEE DAR – 114333	8/23/04
2	SEE DAR – 116001	11/17/04

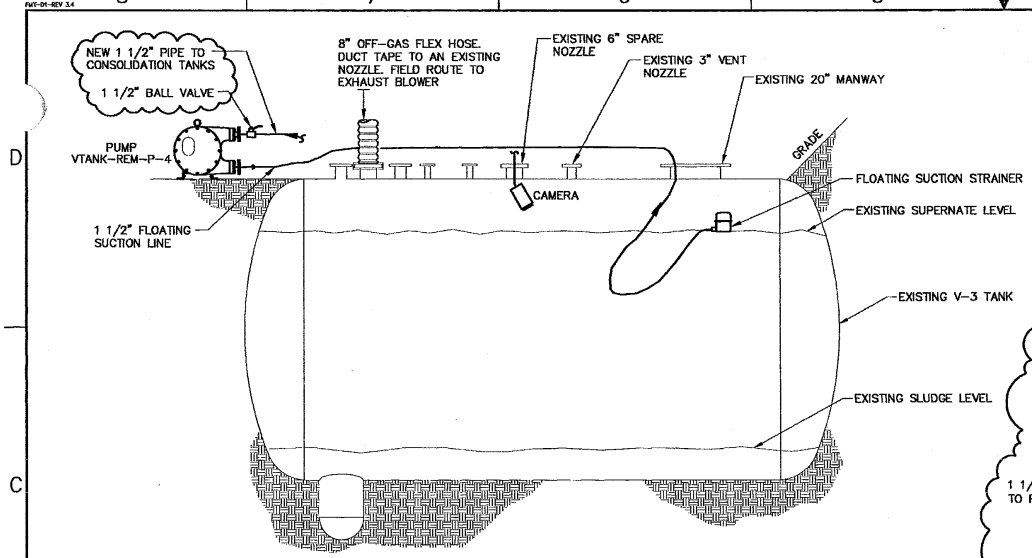

STEP 1 – REMOVE SUPERNATE FROM V-3

SCALE 1/2"=1'-0"

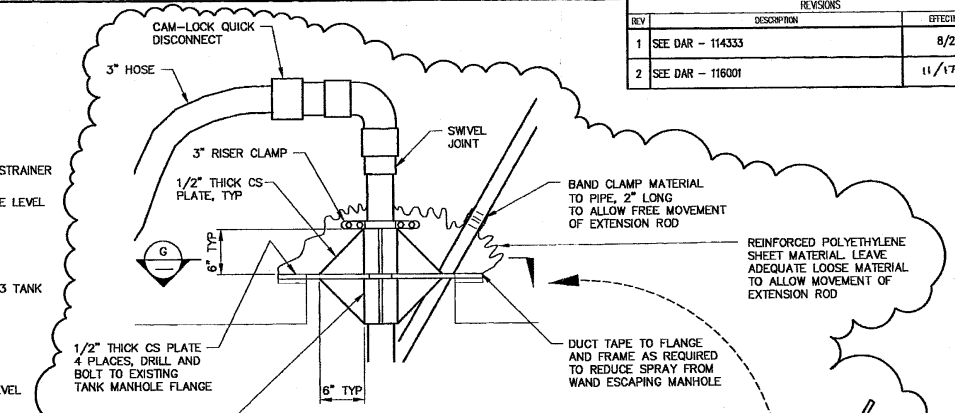

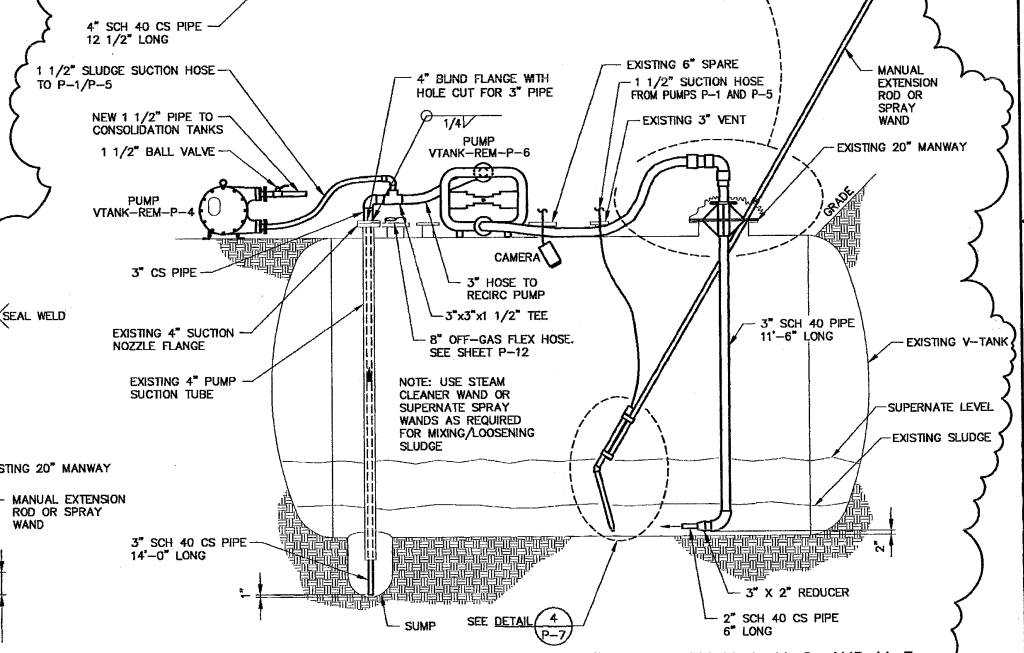

STEP 3 – CIRCULATE AND REMOVE CONTENTS FROM V-1, V-2, AND V-3

SCALE 1/2"=1'-0"

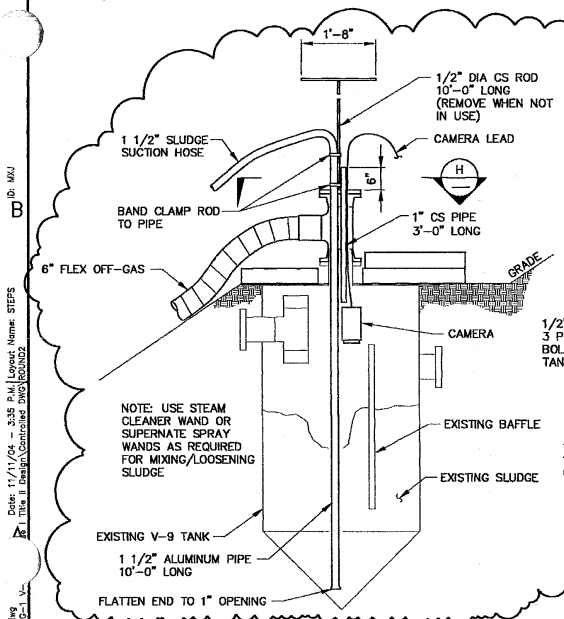

STEP 2 – SPRAY/REMOVE SLUDGE FROM V-9

SCALE 3/4"=1'-0"

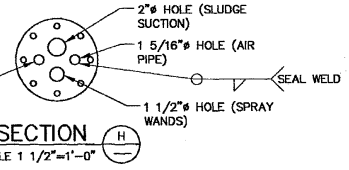

SECTION H

SCALE 1 1/2"=1'-0"

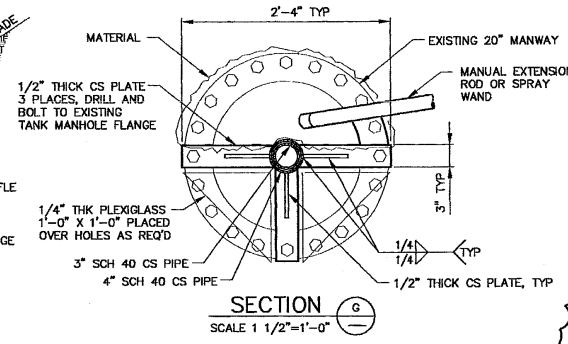

SECTION G

SCALE 1 1/2"=1'-0"

FOR DRAWING INDEX SEE DRAWING NO. 628443	SUBCONTRACT NO. N/A	INEEL (Idaho National Engineering & Environmental Laboratory) BECHTEL BWXT IDAHO, LLC
SCALE: 1/2" = 1'-0"	REQUESTER: G. MC DANNEL	TAN
SCALE: 1 1/2" = 1'-0"	DESIGN: M POPE	TSF-09/18 V-TANKS CONTENTS REMEDIATION
	DRAWN: J MONCUR	TANK DRAINAGE STEPS
	PROJECT NO. 22901	
	SPCL CODE	
DESIGN PHASE: AFC	FOR REVIEW/APPROVAL SIGNATURES SEE DAR NO. 113754	SIZE D; CAGE CODE 01MF3; INDEX CODE NUMBER AREA 034, TYPE 0200, G 52, DEC 090; DWG-628472; REV 2
SAFETY CATEGORY: CG	EFFECTIVE DATE: 7/20/04	SCALE: NOTED; SHEET P-6

PROFESSIONAL ENGINEER REGISTERED 6203 STATE OF IDAHO MARK L. POPE

Date: 11/11/04 – 3:35 P.M. | Layout Name: STEP5
Ac. Title: II Design\Controlled DWG\R02\N02
ID: MKJ

File: 628472-2.dwg
Path: 628\TAN\W460-1 V-

REVISIONS		
REV	DESCRIPTION	EFFECTIVE DATE:
1	SEE DAR – 116001	11/17/04

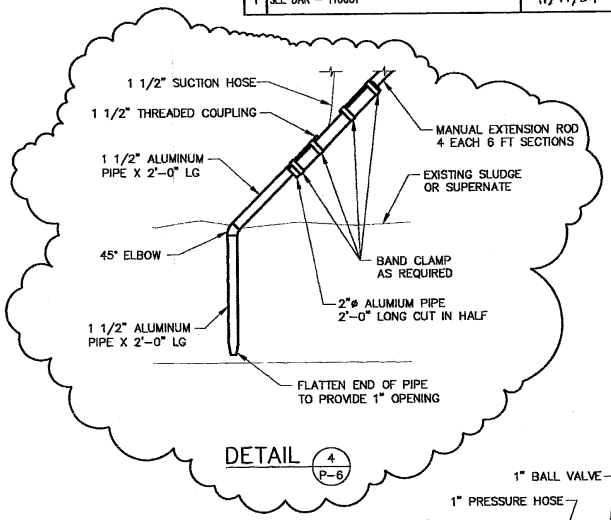

DETAIL 4 / P–6

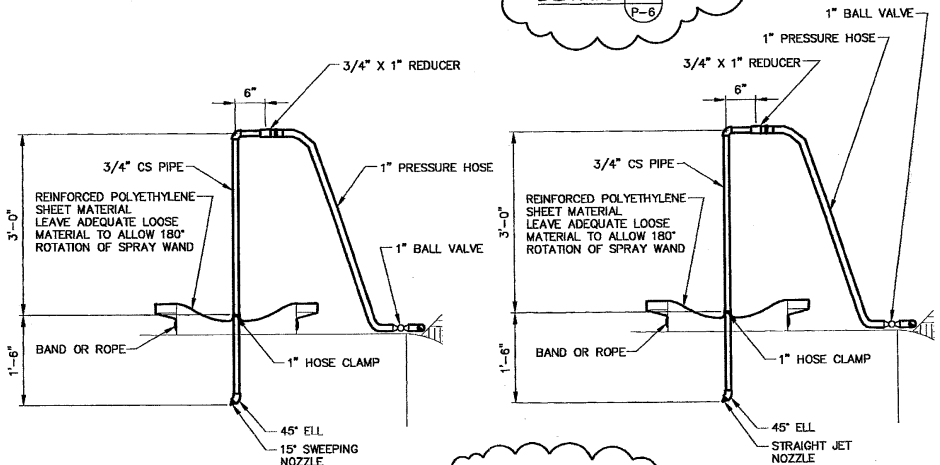

NOTE: 4 WANDS W/15° SWEEPING NOZZLE

WAND DETAILS

NOTE: 4 WANDS W/STRAIGHT JET NOZZLE

NOTE: 4 EACH REQUIRED – 1 EACH TANK + 1 SPARE

FOR DRAWING INDEX SEE DRAWING NO. 628443	SUBCONTRACT NO. N/A	INEEL (Idaho National Engineering & Environmental Laboratory) BECHTEL BWXT IDAHO, LLC
SCALE: 1/2" = 1'–0"	REQUESTER: G. MC DANNEL	TAN
	DESIGN: M POPE	TSF–09/18 V–TANKS CONTENTS REMEDIATION
	DRAWN: J MONCUR	TANK DRAINAGE STEPS
	PROJECT NO. 22901	
	SPCL CODE	
DESIGN PHASE: AFC	FOR REVIEW/APPROVAL SIGNATURES SEE DAR NO. 113754	SIZE D · CAGE CODE 01MF3 · INDEX CODE NUMBER AREA 034 TYPE 0200 G. 52 DOC 090 · DWG 628473 · REV 1
SAFETY CATEGORY: CG	EFFECTIVE DATE: 7/20/04	SCALE: NOTED · SHEET P–7

PROFESSIONAL ENGINEER REGISTERED 6265 11/16/04 STATE OF IDAHO MARK I. POPE

File: 628473–1.dwg
Path: X:\TAN WAG–1 V–
Date: 10/12/04 – 1:45 P.M. | Layout Name: STEPS
ID: MKJ

REVISIONS		
REV	DESCRIPTION	EFFECTIVE DATE
1	SEE DAR – 116001	11/17/04

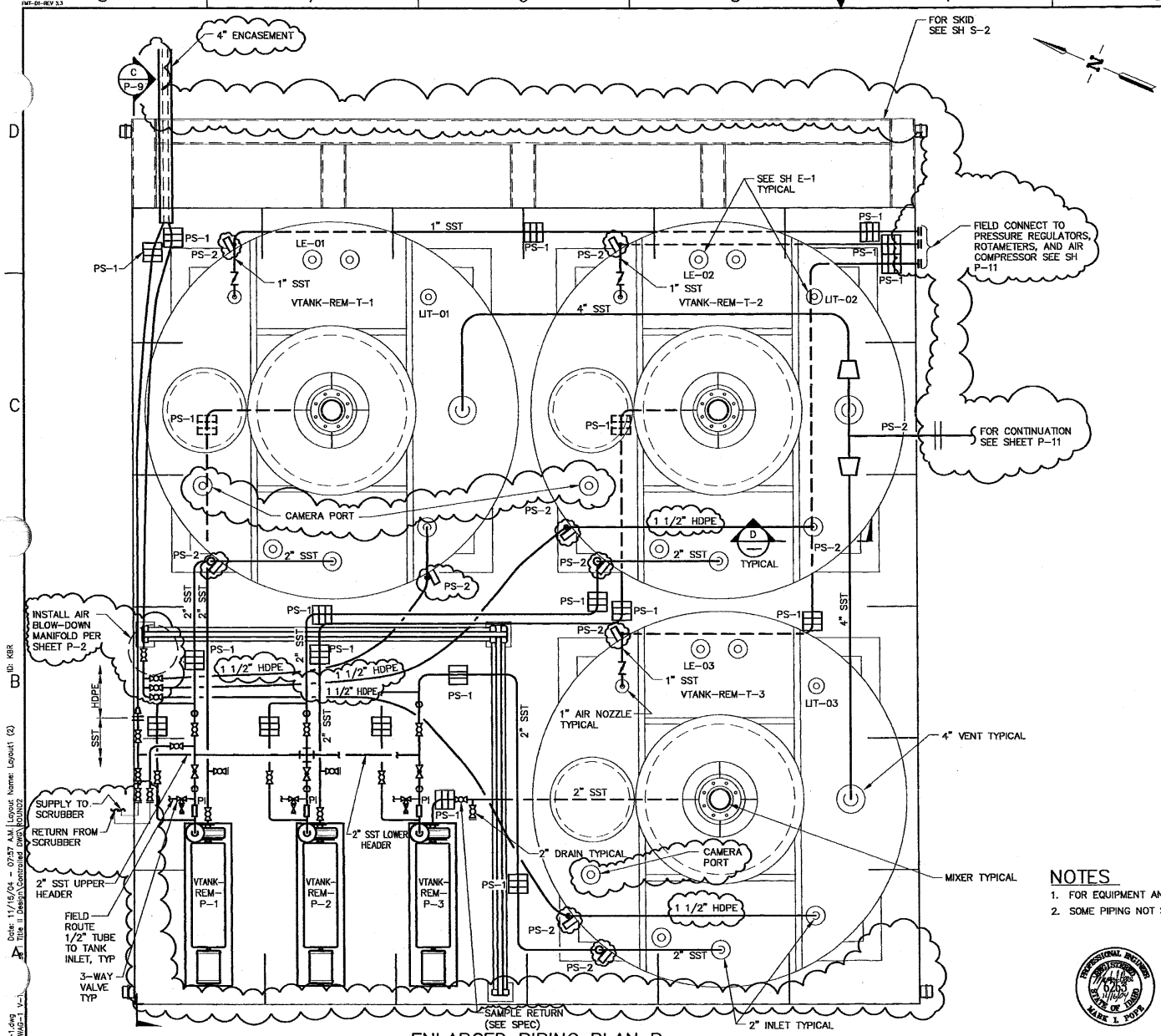

ENLARGED PIPING PLAN B
SCALE 3/4"=1'-0"

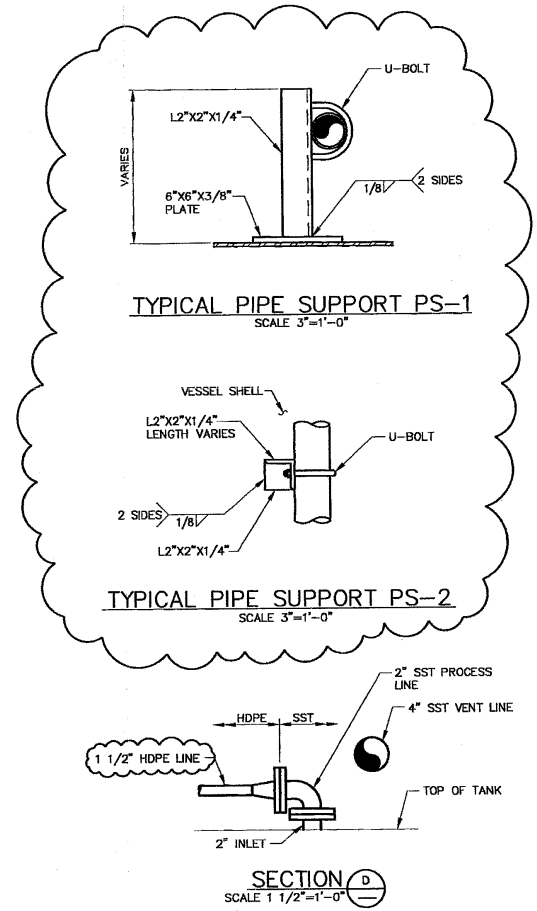

TYPICAL PIPE SUPPORT PS-1
SCALE 3"=1'-0"

TYPICAL PIPE SUPPORT PS-2
SCALE 3"=1'-0"

SECTION D
SCALE 1 1/2"=1'-0"

NOTES

1. FOR EQUIPMENT AND VALVE NUMBERS SEE SH P-2.
2. SOME PIPING NOT SHOWN FOR CLARITY. INSTALL PIPING IN ACCORDANCE WITH SH P-2.

PROFESSIONAL ENGINEER 6263 STATE OF IDAHO MARK L. POPE

FOR DRAWING INDEX SEE DRAWING NO. 628443	SUBCONTRACT NO. N/A	INEEL
SCALE: 3/4" = 1'-0"	REQUESTER: G. MC DANNEL	TAN
SCALE: 1 1/2" = 1'-0"	DESIGN: M POPE	TSF-09/18 V-TANKS CONTENTS REMEDIATION
	DRAWN: J MONCUR	ENLARGED PIPING PLAN B AND PIPE SUPPORTS
	PROJECT NO. 22901	
	SPEC CODE	
DESIGN PHASE: AFC	FOR REVIEW/APPROVAL SIGNATURES SEE DAR NO. 113657	SIZE D · CAGE CODE 01MF3 · INDEX CODE NUMBER AREA 034 TYPE 1748 CL 52 DRG 090 · DWG- 628474 · REV 1
SAFETY CATEGORY: CG	EFFECTIVE DATE: 7/15/04	SCALE: NOTED · SHEET P-8

File: 628474-1.dwg Path: I:\TAN WAG-1 V-1 Date: 11/15/04 - 07:57 A.M. Layout Name: Layout1 (2) Title II Design\Controlled DWG\ROUND2 ID: KBR

REVISIONS		
REV	DESCRIPTION	EFFECTIVE DATE

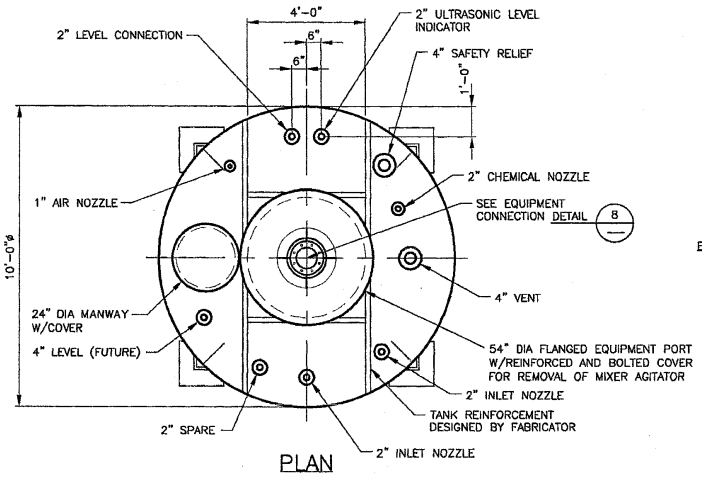

PLAN

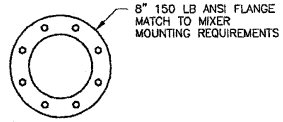

EQUIPMENT CONNECTION

DETAIL 8

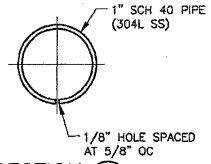

SECTION G

NOTES

1. THE VENDOR SHALL PROVIDE THREE (3) VERTICAL TANKS IN ACCORDANCE WITH THE REQUIREMENTS OF THIS DRAWING AND THE SPECIFICATION. EACH TANK SHALL BE PROVIDED WITH A SAFETY RELIEF DEVICE(S) TO ENSURE THAT THE TANK PRESSURE IS MAINTAINED WITHIN THE LIMITS STATED BELOW.
2. EACH TANK SHALL HAVE APPROXIMATELY 8,000 GAL CAPACITY (INCLUDING THE LOWER HEAD VOLUME) AND SHALL BE A VERTICAL 10 FT NOMINAL DIAMETER TANK. THE TANK SHALL BE CONFIGURED APPROXIMATELY AS SHOWN ON THIS DRAWING. THE TANK BOTTOM SHALL BE DISHED. THE TOP OF THE TANK SHALL BE FLAT. THE TANK SHALL BE SUPPORTED ON FOUR (4) LEGS.
3. THE PERFORMANCE AND OPERATING REQUIREMENTS FOR THE TANK ARE THE FOLLOWING:

TANK DESIGN PRESSURE:	-5" W.G. TO +5 PSIG
MAX TANK LIQUID TEMPERATURE:	160 F
LIQUID SPECIFIC GRAVITY:	1.3
NOMINAL TANK VOLUME:	8,000 GAL
MAXIMUM TANK DIAMETER:	120 INCHES
TANK CONFIGURATION:	VERTICAL
TANK MATERIAL:	304L SS
LOCATION OF USE:	INDOORS

MINIMUM SHELL/HEAD THICKNESS – 3/8"

4. EACH TANK SHALL BE PROVIDED WITH VERTICAL INTERNAL BAFFLE PLATES (1/4" THICK) AS SHOWN.
5. THE TANK SHALL BE REINFORCED TO RESIST THE FOLLOWING LOADS:

VERTICAL LOADS:	1,100 LB (CONCENTRATED/LOAD AT CENTER – MIXER)
	37 LB/SF (LEAD BLANKET SHIELDING ON TANK TOP)
BENDING MOMENT:	2500 FT LBS ON CENTER OF TOP NOZZLE – MIXER)
TORQUE:	430 FT LBS ON CENTER OF TOP NOZZLE – MIXER)
LIFTING LUG LOAD (MIN):	5,000 LB DOWN

6. THE TANKS SHALL BE PROVIDED WITH LIFTING ATTACHMENTS FOR LIFTING OF THE TANKS FROM A HORIZONTAL SHIPPING POSITION TO THE VERTICAL POSITION. ALL CONNECTING FLANGE SURFACES SHALL BE PROTECTED FROM SHIPPING DAMAGE. FLANGED PIPING CONNECTIONS SHALL NOT BE USED TO LIFT OR HANDLE THE TANKS. THE VENDOR SHALL COVER ALL OPENINGS TO MAINTAIN THE CLEANLINESS OF THE INTERIOR OF THE TANK. THE TANK SHALL BE DESIGNED TO BE LIFTED AND HANDLED EMPTY(NO INTERNAL LIQUID DURING MOVEMENT).
7. ALL NOZZLES SHALL BE FLANGED.
8. APPLICABLE CODE: ASME SEC. VIII FOR UNFIRED PRESSURE VESSELS.

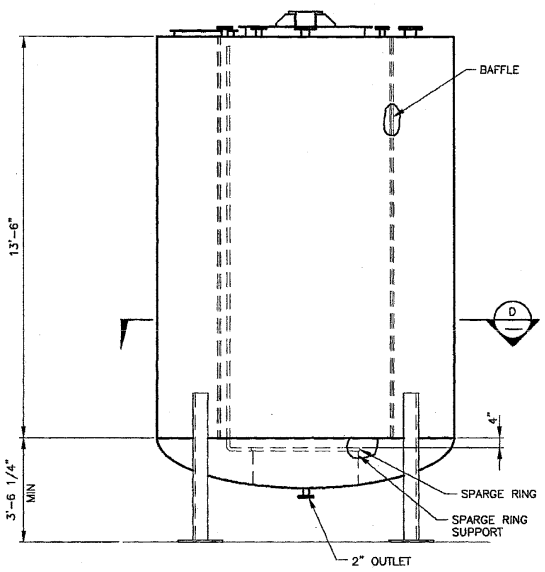

ELEVATION

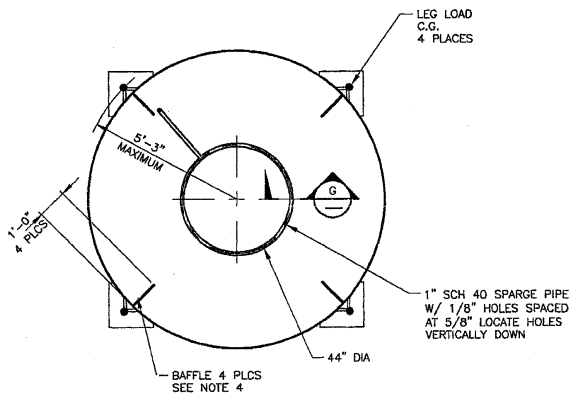

BAFFLE ORIENTATION

SECTION D
SEE NOTE 5

FOR DRAWING INDEX SEE DRAWING NO. 628443	SUBCONTRACT NO. N/A	INEEL BECHTEL BWXT IDAHO, LLC
SCALE: 1/2" = 1'-0"	REQUESTER: G. Mc DANNEL	TAN TSF-09/18 V-TANKS CONSOLIDATION SKID
	DESIGN: R EASTMAN	
	DRAWN: J MONCUR	
	PROJECT NO. 22901	RECEIVING TANK PLAN, ELEVATION, DETAIL AND SECTIONS
	SPCL CODE	
	FOR REVIEW/APPROVAL SIGNATURES SEE DAR NO. 113657	SIZE D; CAGE CODE 01MF3; INDEX CODE NUMBER AREA 034 TYPE 0607 CL 53 SEQ 090; DWG-628476; REV
DESIGN PHASE: AFC		
SAFETY CATEGORY: CG	EFFECTIVE DATE: 7/15/04	SCALE 1/2"=1'-0"; SHEET P-10

PROFESSIONAL ENGINEER REGISTERED 4307 7-15-04 STATE OF IDAHO RANDY EASTMAN

Date: 07/15/04 - 09:37 A.M. | Layout Name: Layout1
File: 628476.dwg
Path: X:\TAN WAG-1 V-T
ID: MXJ

REVISIONS		
REV	DESCRIPTION	EFFECTIVE DATE:
2	INCORPORATED FDC NO.S 114889 & 115969 SEE DAR - 116001	11/17/04
3	SEE DAR - 121536	3/22/05
4	SEE DAR - 123877	6/16/05
5	SEE DAR - 124278	6/17/05

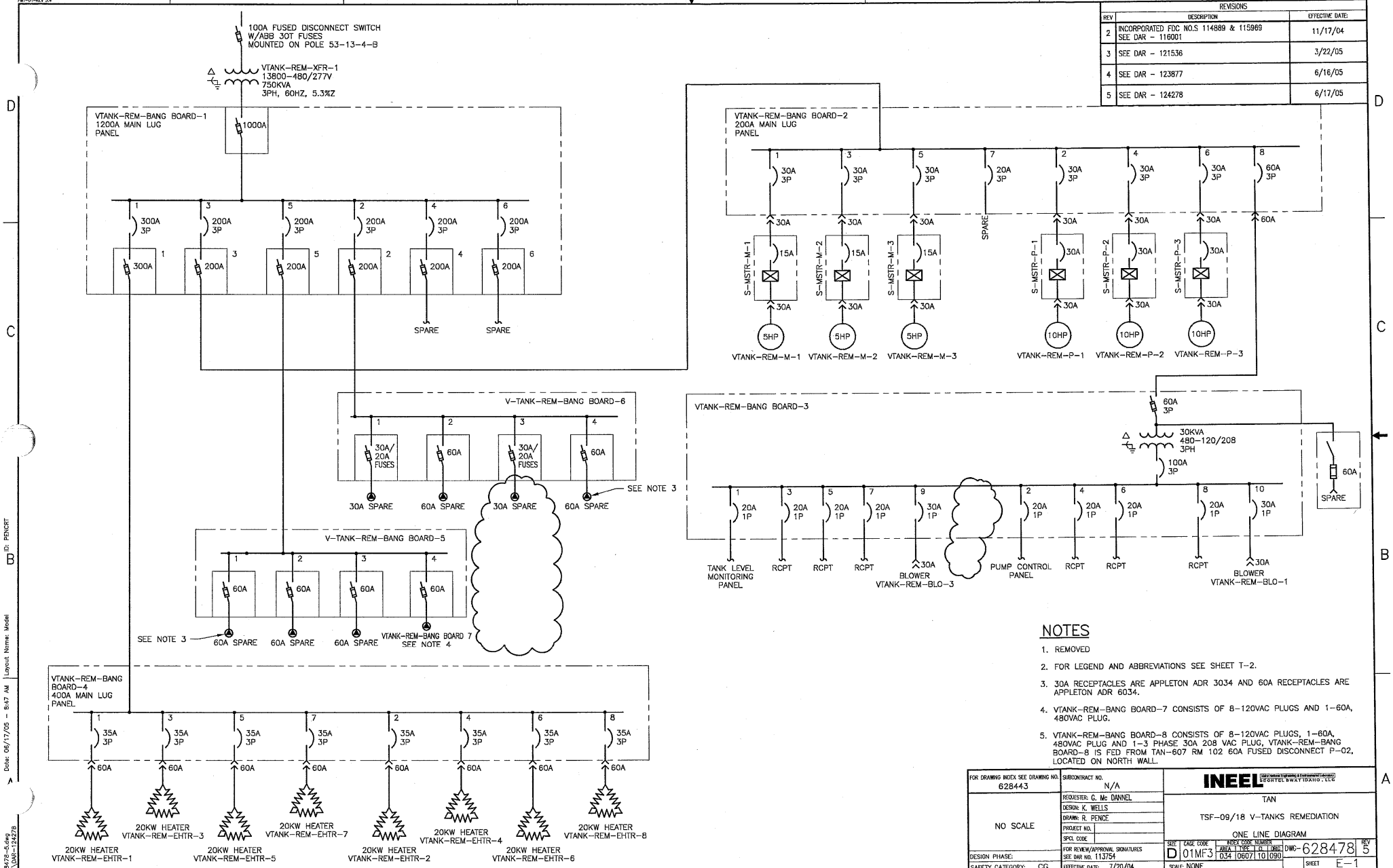

NOTES

1. REMOVED
2. FOR LEGEND AND ABBREVIATIONS SEE SHEET T-2.
3. 30A RECEPTACLES ARE APPLETON ADR 3034 AND 60A RECEPTACLES ARE APPLETON ADR 6034.
4. VTANK-REM-BANG BOARD-7 CONSISTS OF 8-120VAC PLUGS AND 1-60A, 480VAC PLUG.
5. VTANK-REM-BANG BOARD-8 CONSISTS OF 8-120VAC PLUGS, 1-60A, 480VAC PLUG AND 1-3 PHASE 30A 208 VAC PLUG, VTANK-REM-BANG BOARD-8 IS FED FROM TAN-607 RM 102 60A FUSED DISCONNECT P-02, LOCATED ON NORTH WALL.

FOR DRAWING INDEX SEE DRAWING NO. 628443	SUBCONTRACT NO. N/A	INEEL
NO SCALE	REQUESTER: G. Mc DANNEL	TAN
	DESIGN: K. WELLS	TSF-09/18 V-TANKS REMEDIATION
	DRAWN: R. PENCE	ONE LINE DIAGRAM
	PROJECT NO.	
	SPCL CODE	
DESIGN PHASE:	FOR REVIEW/APPROVAL SIGNATURES SEE DAR NO. 113754	SIZE D · CAGE CODE 01MF3 · INDEX CODE NUMBER: AREA 034, TYPE 0607, CL 10, ORIG 090 · DWG-628478 · REV 5
SAFETY CATEGORY: CG	EFFECTIVE DATE: 7/20/04	SCALE: NONE · SHEET E-1

File: 628478-5.dwg Path: R:\DAR-124278 Date: 06/17/05 - 8:47 AM Layout Name: Model ID: PENCRT

REVISIONS		
REV	DESCRIPTION	EFFECTIVE DATE:
1	SEE DAR – 114333	8/23/04
2	INCORPORATED FDC NO.S 114889 & 115969 SEE DAR – 116001	11/17/04

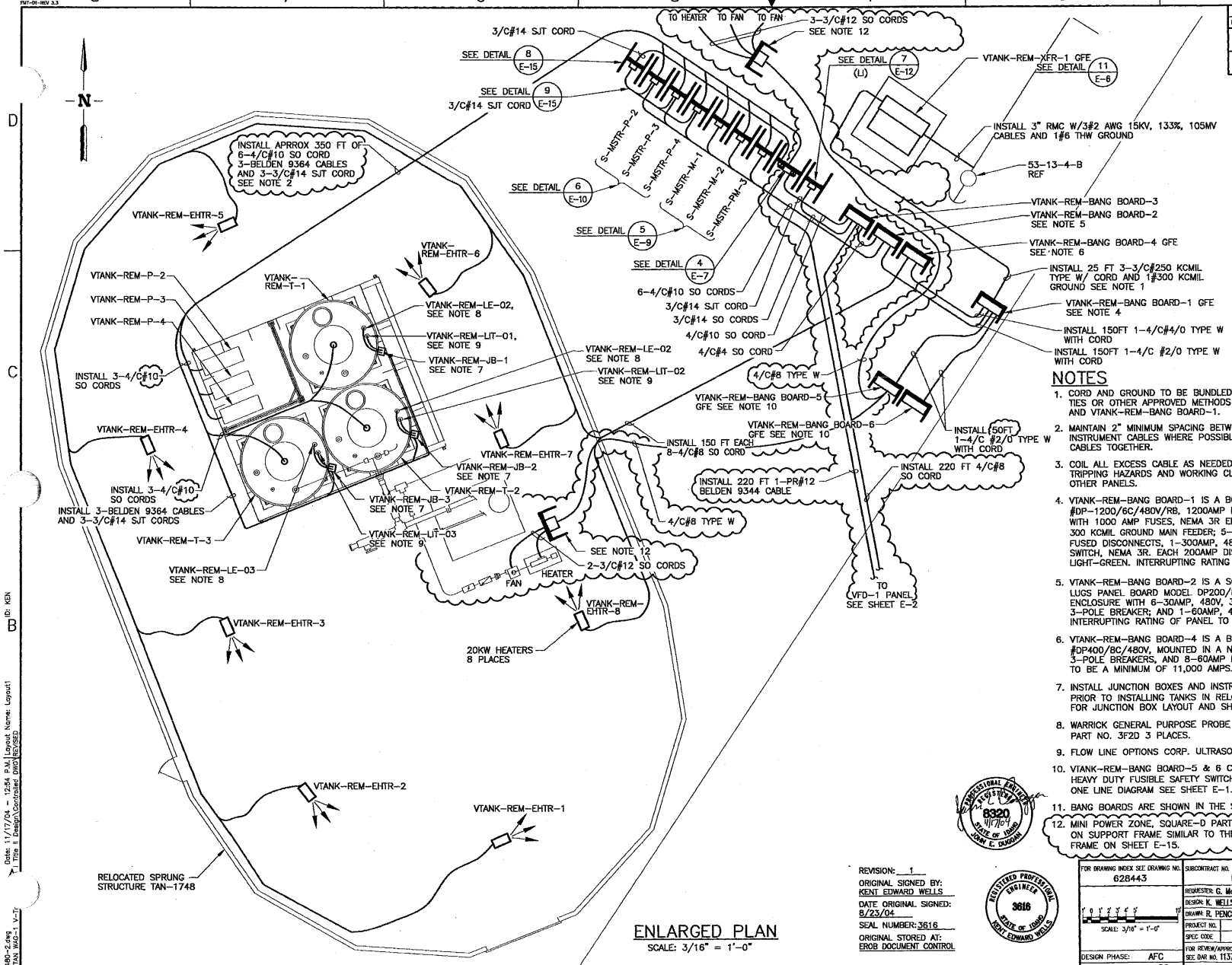

NOTES

1. CORD AND GROUND TO BE BUNDLED TOGETHER USING SUNLIGHT RESISTANT CABLE TIES OR OTHER APPROVED METHODS FOR ENTIRE LENGTH BETWEEN VTANK-REM-XFR-1 AND VTANK-REM-BANG BOARD-1.
2. MAINTAIN 2" MINIMUM SPACING BETWEEN 480V MOTOR FEEDS AND LOW VOLTAGE INSTRUMENT CABLES WHERE POSSIBLE. DO NOT BUNDLE INSTRUMENT AND POWER CABLES TOGETHER.
3. COIL ALL EXCESS CABLE AS NEEDED TO MAINTAIN A SAFE WORKING AREA FREE OF TRIPPING HAZARDS AND WORKING CLEARANCES IN FRONT OF BANK BOARDS AND OTHER PANELS.
4. VTANK-REM-BANG BOARD-1 IS A BOSS CHAMBERS POWER PRODUCTS INC MODEL #DP-1200/6C/480V/RB, 1200AMP MAIN FUSED DISCONNECT SWITCH, 480VAC, 60HZ, 3PH, 3P/4W, WITH 1000 AMP FUSES, NEMA 3R ENCLOSURE WITH 3 EACH 250MCM/3C TYPE W CORDS AND 300 KCMIL GROUND MAIN FEEDER; 5-200AMP, 480V, 3-POLE BREAKERS; 5-200AMP, 480VAC, 3P/4W, FUSED DISCONNECTS, 1-300AMP, 480V, 3P/4W FUSED DISCONNECT, 1-300AMP, 3P, 480V BREAKER SWITCH, NEMA 3R. EACH 200AMP DISCONNECT TO HAVE 480 VOLT "POWER ON" INDICATION PILOT LIGHT-GREEN. INTERRUPTING RATING OF PANEL TO BE A MINIMUM OF 14000 AMPS.
5. VTANK-REM-BANG BOARD-2 IS A SQUARE D 200AMP, MLO, 3PH, 3P/4W, DOUBLE LINE/LOAD LUGS PANEL BOARD MODEL DP200/8C/480V MOUNTED IN A NEMA 3R ENCLOSURE WITH 6-30AMP, 480V, 3-POLE BREAKERS; 1 20AMP, 480V, 3-POLE BREAKER; AND 1-60AMP, 480V, 3-POLE BREAKER. INTERRUPTING RATING OF PANEL TO BE A MINIMUM OF 11,400 AMPS.
6. VTANK-REM-BANG BOARD-4 IS A BOSS CHAMBERS POWER PRODUCTS INC MODEL #DP400/8C/480V, MOUNTED IN A NEMA 3R ENCLOSURE WITH 8-35AMP, 480V, 3-POLE BREAKERS, AND 8-60AMP RECEPTACLES. INTERRUPTING RATING OF PANEL TO BE A MINIMUM OF 11,000 AMPS.
7. INSTALL JUNCTION BOXES AND INSTRUMENTS. CALIBRATE INSTRUMENTS ON TANKS PRIOR TO INSTALLING TANKS IN RELOCATED SPRUNG STRUCTURE. SEE SHEET E-13 FOR JUNCTION BOX LAYOUT AND SHEET E-14 FOR INTERNAL CONNECTIONS.
8. WARRICK GENERAL PURPOSE PROBE 12" LONG PART NO. 3R1H0 W/PROBE FLANGE ATTACHMENT PART NO. 3F2D 3 PLACES.
9. FLOW LINE OPTIONS CORP. ULTRASONIC LEVEL TRANSMITTER PART NO. LU13-5001 3 PLACES.
10. VTANK-REM-BANG BOARD-5 & 6 CONSIST OF A 8" X 8" NEMA 3R WIRE WAY AND SQUARE D HEAVY DUTY FUSIBLE SAFETY SWITCHES IN NEMA 3R ENCLOSURES, SIZE AS INDICATED ON THE ONE LINE DIAGRAM SEE SHEET E-1.
11. BANG BOARDS ARE SHOWN IN THE STAGING POSITION. RELOCATE AS REQUIRED FOR UTILIZATION.
12. MINI POWER ZONE, SQUARE-D PART NO. MPZ5S40F W/6-20A SINGLE POLE BREAKERS MOUNTED ON SUPPORT FRAME SIMILAR TO THE HIGH HIGH LEVEL SECONDARY SHUTDOWN PANEL SUPPORT FRAME ON SHEET E-15.

ENLARGED PLAN

SCALE: 3/16" = 1'-0"

REVISION: 1
ORIGINAL SIGNED BY: KENT EDWARD WELLS
DATE ORIGINAL SIGNED: 8/23/04
SEAL NUMBER: 3616
ORIGINAL STORED AT: EROB DOCUMENT CONTROL

PROFESSIONAL ENGINEER 8320 11/17/04 STATE OF IDAHO JOHN E. DUGGAN

REGISTERED PROFESSIONAL ENGINEER 3616 STATE OF IDAHO KENT EDWARD WELLS

FOR DRAWING INDEX SEE DRAWING NO. 628443	SUBCONTRACT NO. N/A	INEEL (Idaho National Engineering & Environmental Laboratory) BECHTEL BWXT IDAHO, LLC
SCALE: 3/16" = 1'-0"	REQUESTER: G. Mc DANNEL	TAN
	DESIGN: K. WELLS	TSF-09/18 V-TANKS REMEDIATION
	DRAWN: R. PENCE	ENLARGED ELECTRICAL PLAN
	PROJECT NO.	
	SPEC CODE	
DESIGN PHASE: AFC	FOR REVIEW/APPROVAL SIGNATURES SEE DAR NO. 113754	SIZE D · CAGE CODE 01MF3 · INDEX CODE NUMBER AREA 034 TYPE 0400 SL 10 LOBE 090 · DWG-628480 · REV 2
SAFETY CATEGORY: CG	EFFECTIVE DATE: 7/20/04	SCALE: NOTED · SHEET E-3

REVISIONS		
REV	DESCRIPTION	EFFECTIVE DATE:
1	SEE DAR – 114333	8/23/04
2	SEE DAR – 116001	11/17/04

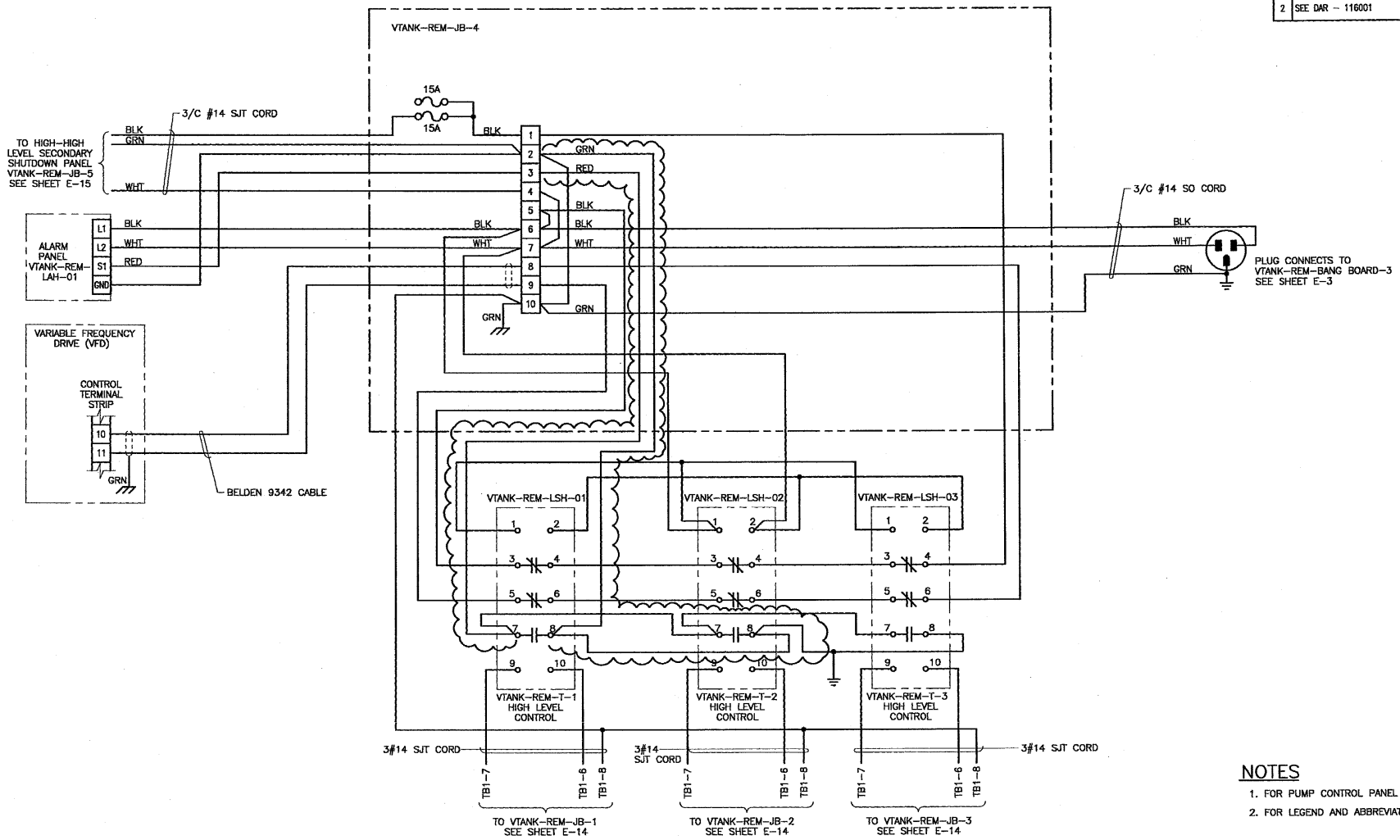

NOTES

1. FOR PUMP CONTROL PANEL DETAIL SEE SHEET E–7.
2. FOR LEGEND AND ABBREVIATIONS SEE SHEET T–2.

REVISION: 1
ORIGINAL SIGNED BY: KENT EDWARD WELLS
DATE ORIGINAL SIGNED: 8/23/04
SEAL NUMBER: 3616
ORIGINAL STORED AT: EROB DOCUMENT CONTROL

FOR DRAWING INDEX SEE DRAWING NO. T–2	SUBCONTRACT NO. N/A	INEEL BECHTEL BWXT IDAHO, LLC
NO SCALE	REQUESTER: C. Mc DANNEL	TAN
	DESIGN: K. WELLS	TSF–09/18 V–TANKS REMEDIATION
	DRAWN: K.L. SPARROW	PUMP CONTROL PANEL SCHEMATIC DIAGRAM
	PROJECT NO. 22901	
	SPCL CODE	SIZE D · CAGE CODE 01MF3 · INDEX CODE NUMBER AREA 034 TYPE 0400 SQ 10 ORG 090 · DWG– 628485 · REV 2
DESIGN PHASE: AFC	FOR REVIEW/APPROVAL SIGNATURES SEE DAR NO. 113657	
SAFETY CATEGORY: CG	EFFECTIVE DATE: 7/15/04	SCALE: NONE · SHEET E–8

MADE FROM 627063

Date: 11/17/04 – 2:02 P.M. | Drawn in Model Space | Title 1: Design\Controlled DWG\REVISED | ID: KEN

File: 628485–2.dwg
Path: H:\TAN WAG–1 V–T

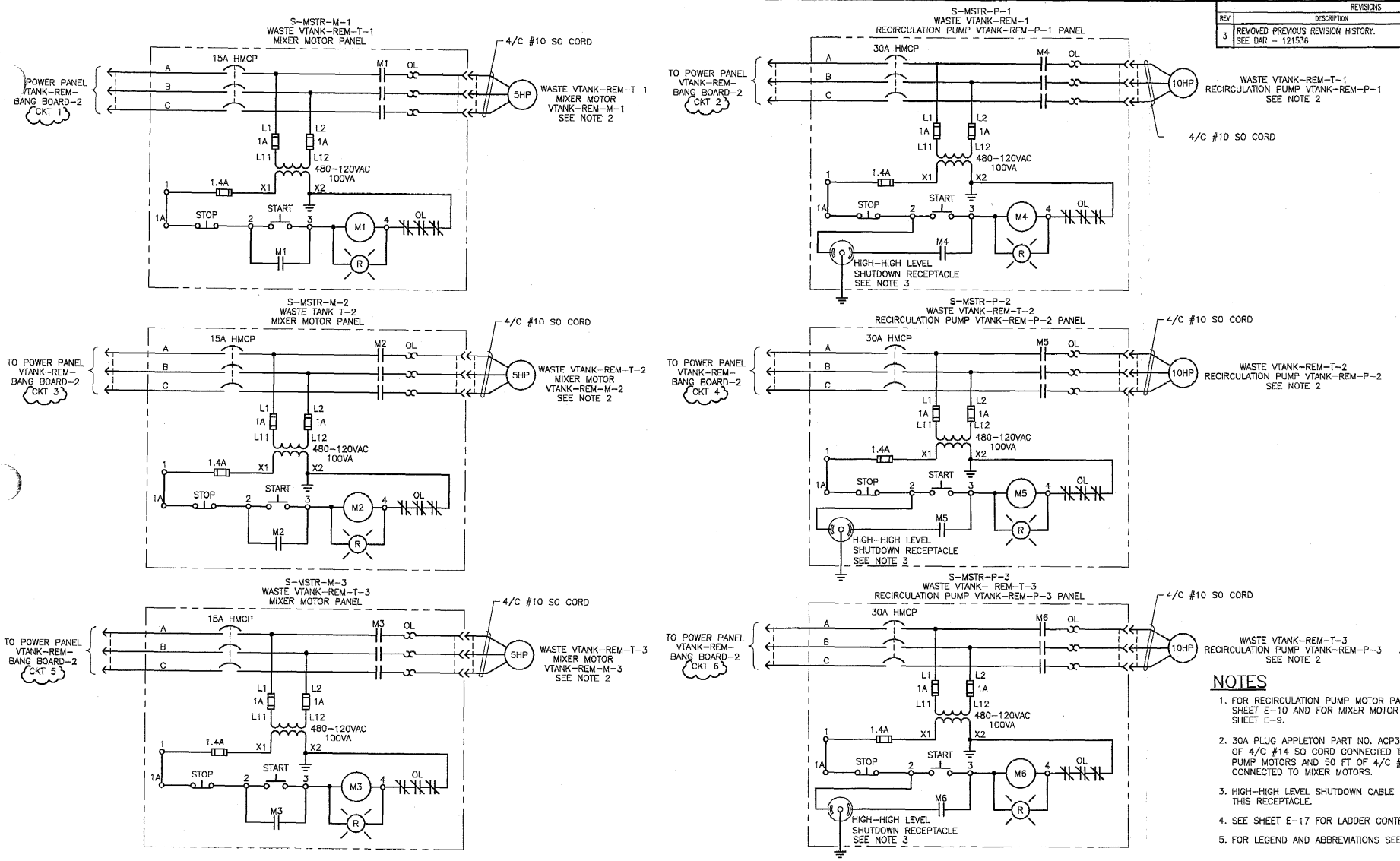

REVISIONS		
REV	DESCRIPTION	EFFECTIVE DATE:
3	REMOVED PREVIOUS REVISION HISTORY. SEE DAR - 121536	3/22/05

NOTES

1. FOR RECIRCULATION PUMP MOTOR PANEL DETAIL SEE SHEET E-10 AND FOR MIXER MOTOR PANEL DETAIL SEE SHEET E-9.
2. 30A PLUG APPLETON PART NO. ACP3034BC AND 50 FT OF 4/C #14 SO CORD CONNECTED TO RECIRCULATION PUMP MOTORS AND 50 FT OF 4/C #12 SO CORD CONNECTED TO MIXER MOTORS.
3. HIGH-HIGH LEVEL SHUTDOWN CABLE CONNECTED TO THIS RECEPTACLE.
4. SEE SHEET E-17 FOR LADDER CONTROL DIAGRAM.
5. FOR LEGEND AND ABBREVIATIONS SEE SHEET T-2.

FOR DRAWING INDEX SEE DRAWING NO. 628443	SUBCONTRACT NO. N/A	INEEL
NO SCALE	REQUESTER: G. Mc DANNEL DESIGN: K. WELLS DRAWN: K.L. SPARROW PROJECT NO. 22901 SPCL CODE	TAN TSF-09/18 V-TANKS REMEDIATION RECIRCULATION PUMP & MIXER MOTOR PANEL SCHEMATIC DIAGRAMS
DESIGN PHASE:	FOR REVIEW/APPROVAL SIGNATURES SEE DAR NO. 113657	SIZE D · CAGE CODE 01MF3 · INDEX CODE NUMBER AREA 034 · TYPE 0400 · CL 10 · ORIG 090 · DWG-628488 · REV 3
SAFETY CATEGORY: CG	EFFECTIVE DATE: 7/15/04	SCALE: NONE · SHEET E-11

MADE FROM 627066

REVISIONS		
REV	DESCRIPTION	EFFECTIVE DATE:
1	SEE DAR – 114333	8/23/04
2	SEE DAR – 116001	11/17/04

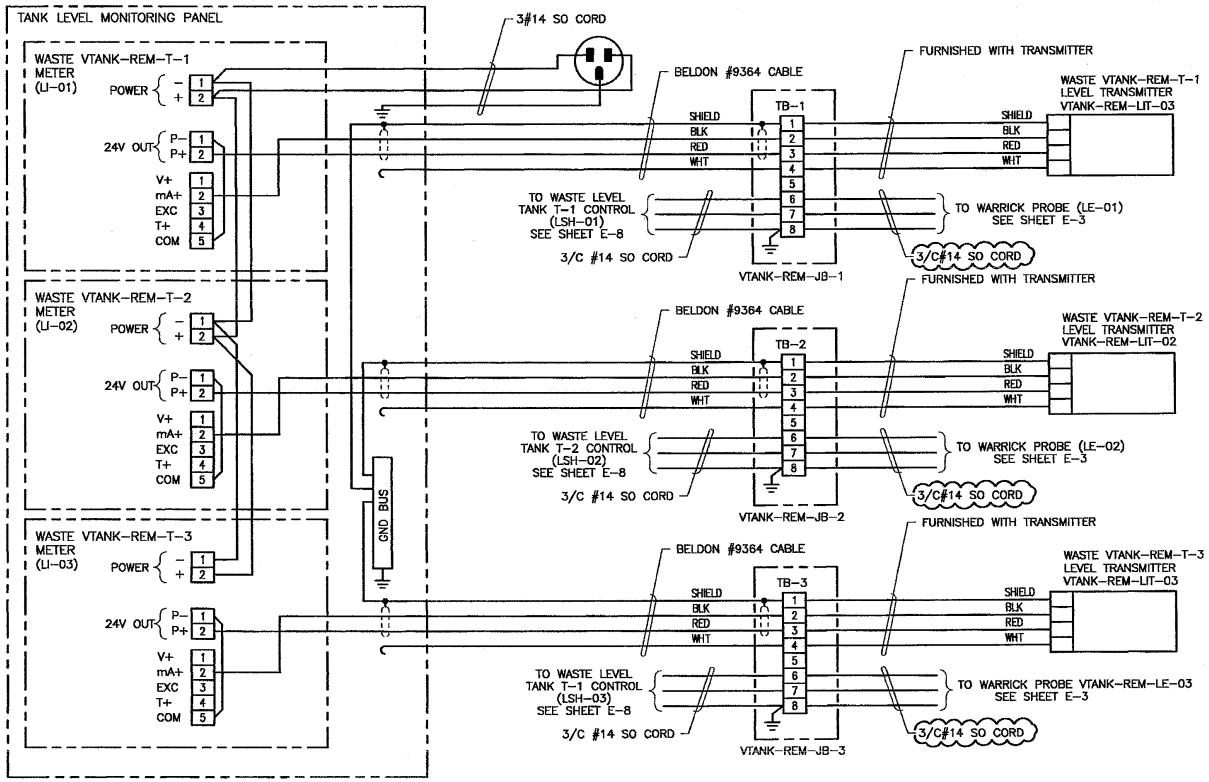

NOTES

1. ALL WIRING TO BE #14 THHW UNLESS OTHERWISE SPECIFIED.
2. FOR TANK LEVEL MONITORING PANEL AND JUNCTION BOX DETAILS SEE SHEET E-13.
3. FOR TRANSMITTER AND PROBE LOCATIONS ON VTANKS-REM-T-1, T-2, AND T-3 SEE SHEET E-3.
4. ITEMS SHOWN IN BOLD ARE IN THE CONTRACT. ITEMS SHOWN LIGHT ARE NOT IN THE CONTRACT.
5. FOR LEGEND AND ABBREVIATIONS SEE SHEET T-2.

REGISTERED PROFESSIONAL ENGINEER 8320 STATE OF IDAHO JOHN E. DUGGAN

REGISTERED PROFESSIONAL ENGINEER 3616 STATE OF IDAHO KENT EDWARD WELLS

REVISION: 1
ORIGINAL SIGNED BY: KENT EDWARD WELLS
DATE ORIGINAL SIGNED: 8/23/04
SEAL NUMBER: 3616
ORIGINAL STORED AT: EROB DOCUMENT CONTROL

FOR DRAWING INDEX SEE DRAWING NO. T-2	SUBCONTRACT NO. N/A	INEEL BECHTEL BWXT IDAHO, LLC
NO SCALE	REQUESTER: G. McDANNEL DESIGN: K. WELLS DRAWN: M COOKE PROJECT NO. 22901 SPCL CODE	TAN TSF-09/18 V-TANKS REMEDIATION TANK LEVEL MONITORING WIRING DIAGRAM
DESIGN PHASE: AFC	FOR REVIEW/APPROVAL SIGNATURES SEE DAR NO. 113657	SIZE D · CAGE CODE 01MF3 · INDEX CODE NUMBER: AREA 034, TYPE 0400, CL 10, DISC 090 · DWG 628491 · REV 2
SAFETY CATEGORY: CG	EFFECTIVE DATE: 7/15/04	SCALE: NONE · SHEET E-14

1 MADE FROM 627069

File: 628491-2.dwg Path: H:\TAN WAG-1 V-Tg Date: 11/17/04 – 1:47 P.M. Layout Name: D Size Title II Design\Controlled DWG\REVISED ID: KEN

REVISIONS		
REV	DESCRIPTION	EFFECTIVE DATE:
1	SEE DAR – 114333	8/23/04
2	SEE DAR – 116001	11/17/04

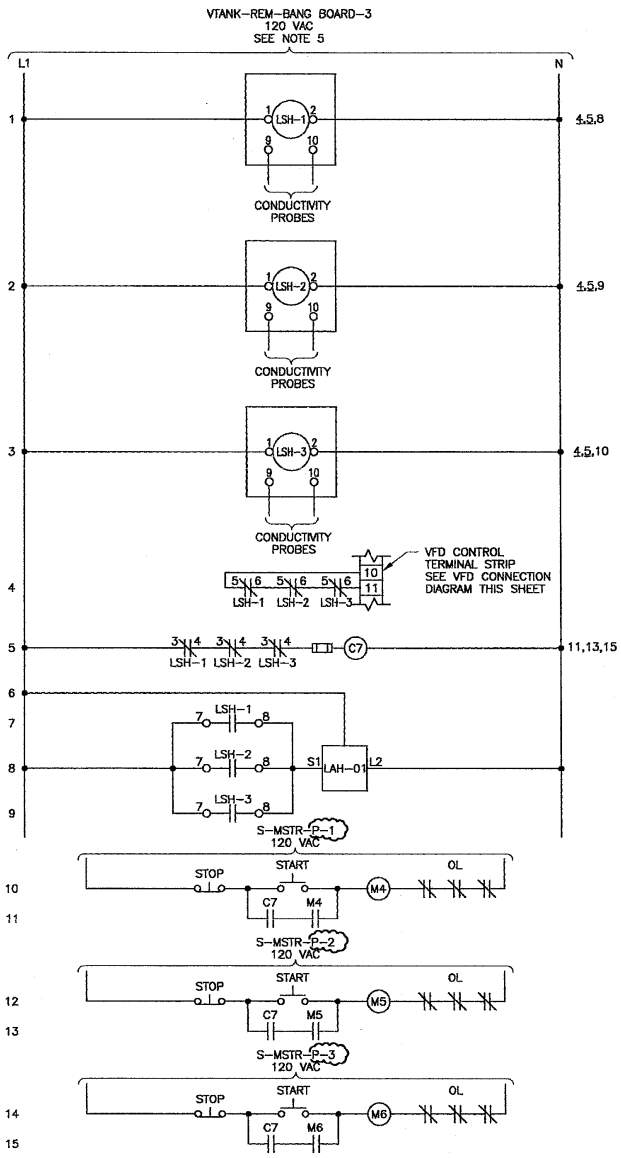

PUMP & LEVEL CONTROL LADDER DIAGRAM

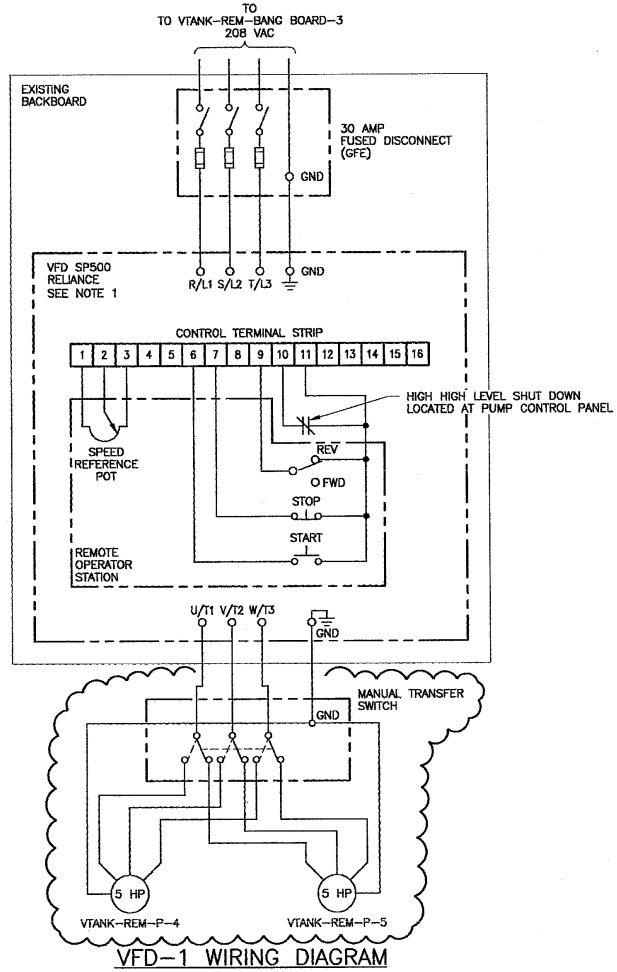

VFD-1 WIRING DIAGRAM

NOTES

1. ALL EXISTING PLUG AND RECEPTACLE CONNECTS TO BE REPLACE WITH HARD WIRE CONNECTION.
2. FOR VARIABLE FREQUENCY DRIVE (VFD) PANEL DETAIL SEE SHEET E-16.
3. FOR PUMP CONTROL PANEL SCHEMATIC DIAGRAM SEE SHEET E-8.
4. FOR MIXER MOTOR PANEL SCHEMATIC DIAGRAMS SEE SHEET E-11.
5. ALL RELAYS SHOWN IN SHELF POSITION.
6. FOR LEGEND AND ABBREVIATIONS SEE SHEET T-2.

REVISION: 1
ORIGINAL SIGNED BY: KENT EDWARD WELLS
DATE ORIGINAL SIGNED: 8/23/04
SEAL NUMBER: 3616
ORIGINAL STORED AT: EROB DOCUMENT CONTROL

PROFESSIONAL ENGINEER REGISTERED 8320 STATE OF IDAHO JOHN E. DUGGAN 11/17/04

REGISTERED PROFESSIONAL ENGINEER 3616 STATE OF IDAHO KENT EDWARD WELLS

FOR DRAWING INDEX SEE DRAWING NO. T-2	SUBCONTRACT NO. N/A	INEEL BECHTEL BWXT IDAHO, LLC
NO SCALE	REQUESTER: G. Mc DANNEL DESIGN: K. WELLS DRAWN: R. PENCE PROJECT NO. SPCL CODE	TAN TSF-09/18 V-TANKS REMEDIATION VFD WIRING DIAGRAM AND PUMP AND LEVEL CONTROL LADDER DIAGRAM
DESIGN PHASE: AFC	FOR REVIEW/APPROVAL SIGNATURES SEE DAR NO. 113657	SIZE D · CAGE CODE 01MF3 · INDEX CODE NUMBER AREA 034 TYPE 0400 CL 10 QBG 090 · DWG- 628494 · REV 2
SAFETY CATEGORY: CG	EFFECTIVE DATE: 7/15/04	SCALE: NONE · SHEET E-17

File: 628494-2.dwg
Path: H:\TAN WAG-1 V-
Date: 11/17/04 – 08:33 A.M. Drawn in Model Space
Title II Design\Controlled DWG\REVISED
ID: KEN

REVISIONS		
REV	DESCRIPTION	EFFECTIVE DATE
1	SEE DAR-116995, OVERALL CHANGE	12/7/04
2	AS BUILT AS OF 2-14-05, SEE DAR-120173	2-14-05

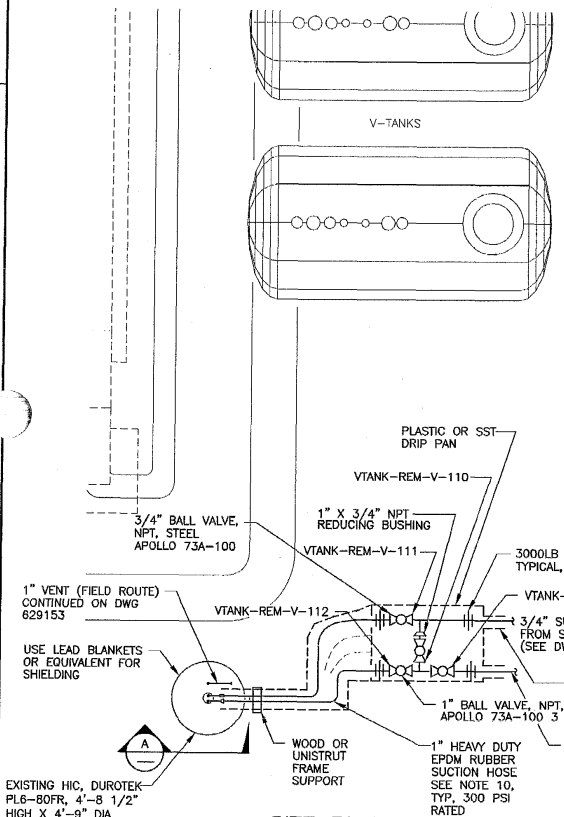

SITE PLAN

SCALE: 1/4"=1'-0"

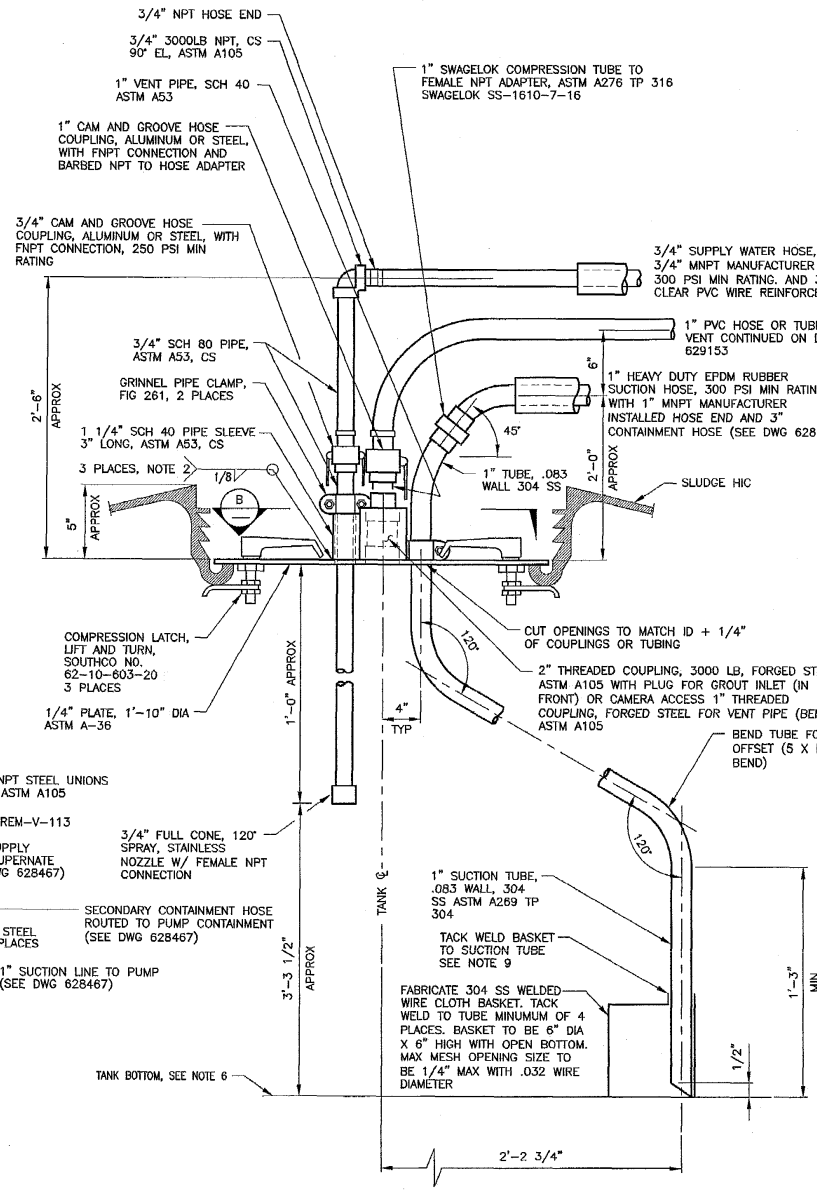

SECTION A
NTS

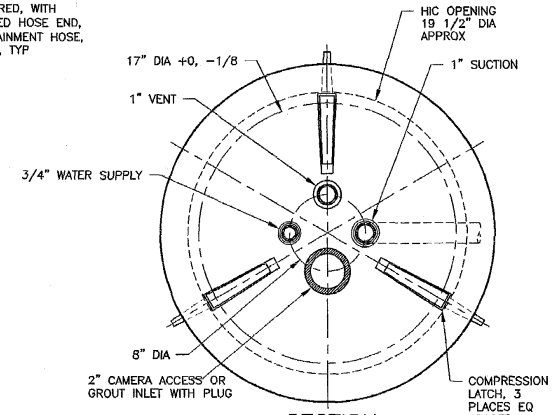

SECTION B
NTS

NOTES

1. ALL MATERIAL CARBON STEEL UNLESS OTHERWISE NOTED PROVIDED IN ACCORDANCE WITH SECTION 15203 OF SPECIFICATION 555.
2. (Q) WELD IN ACCORDANCE WITH SECTION 15024 OF SPECIFICATION 555 USING INEEL WELDING PROCEDURE C3.5 OR EQUIVALENT. VISUAL INSPECTION PER AWS D1.1, SECTION 6.
3. FIELD ROUTE HOSES IN FIELD FROM HIC CONNECTIONS TO V-TANK CONNECTIONS. FIELD INSTALL SECONDARY PIPING.
4. (Q) PERFORM HYDROTEST IN FIELD ON LIQUID PIPING/HOSE USING RAW WATER AT MIN PRESSURE OF 200-210 PSI FOR 10 MINUTES. REPAIR LEAKS.
5. ALL TESTING AND INSPECTIONS SHALL BE BASED ON B31.3, CATEGORY D, AND PERFORMED BEFORE INSTALLATION OF EQUIPMENT INTO HIC USING RAW WATER.
6. TILT HIC FOR DRAINAGE TO SUCTION PIPE.
7. TOLERANCES: DIMENSIONS ± 1/4" UNO, ANGLES ± 10'.
8. (Q) = QUALITY INSPECTION BY SUBCONTRACTOR (OFF-SITE) OR CONTACTOR (ON SITE).
9. WELD PER INEEL WELDING PROCEDURE S2.0 OR EQUIVALENT, VISUAL INSPECTION ONLY TO VERIFY ADEQUATE ATTACHMENT.
10. ALL HOSES HAVE MANUFACTURER INSTALLED MALE NPT HOSE ENDS RATED FOR 200 PSI.

FOR DRAWING INDEX SEE DRAWING NO. N/A	SUBCONTRACT NO. N/A	INEEL (Idaho National Engineering & Environmental Laboratory) LOCKHEED MARTIN IDAHO, LLC
	REQUESTER: RICHARD P. WELLS	TAN
	DESIGN: RANDY EASTMAN	SLUDGE TRANSFER SYSTEM ARA 16
	DRAWN: KEITH BRONSON	SITE PLAN, DETAILS, AND SECTIONS
SCALE: 1/4" = 1'-0"	PROJECT NO.	
	SPCL CODE	
DESIGN PHASE: AFC	FOR REVIEW/APPROVAL SIGNATURES SEE DAR NO. 115000	SIZE D · CAGE CODE 01MF3 · INDEX CODE NUMBER AREA 034 TYPE 0100 SQ 52 SEQ 090 · DWG-628814 · REV 2
SAFETY CATEGORY: CG	EFFECTIVE DATE: 9/14/04	SCALE: NOTED · SHEET 1 OF 1

FMT-D1-REV 3.4

Date: 02/14/05 - 1:36 PM | Layout name: C-1 | Dr: KBR

File: 628814-2.dwg
Path: P:\SLUDGE

FMT-01-REV 3.4

25C

REVISIONS		
REV	DESCRIPTION	EFFECTIVE DATE

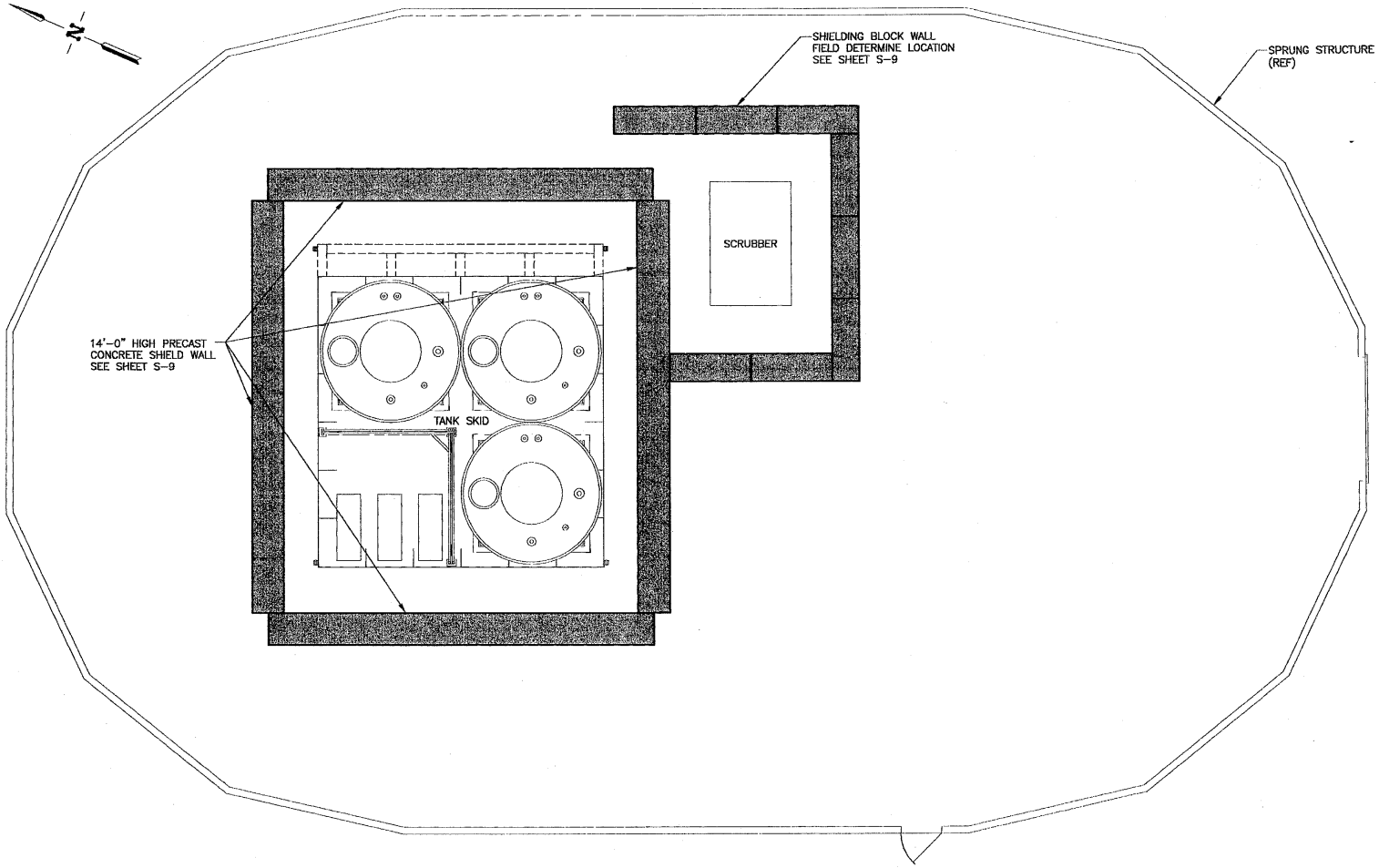

SHIELDING PLAN

SCALE: 1/4"=1'-0"

FOR DRAWING INDEX SEE DRAWING NO. 628443	SUBCONTRACT NO. N/A	INEEL (Idaho National Engineering & Environmental Laboratory) BECHTEL BWXT IDAHO, LLC
SCALE: 1/4" = 1'-0"	REQUESTER: M.E. BODILY DESIGN: R.F. LIPPERT DRAWN:	TAN TSF-09/18 V-TANKS REMEDIATION SHIELDING PLAN
	PROJECT NO. 22901 SPCL. CODE	SIZE D · CAGE CODE 01MF3 · INDEX CODE NUMBER AREA 034 TYPE 1748 SQ 62 DWG 090 · DWG- 629029 · REV
DESIGN PHASE: AFC	FOR REVIEW/APPROVAL SIGNATURES SEE DAR NO. 116007	SCALE: NOTED · SHEET S-8
SAFETY CATEGORY: CG	EFFECTIVE DATE: 11/17/04	

PROFESSIONAL ENGINEER REGISTERED 5629 11-16-04 STATE OF IDAHO RANDY F. LIPPERT

File: 629029.dwg
Path: K:\TAN WAG-1 V-T

Date: 11/15/04 - 11:28 AM | Layout Name: S-8
Title | Design\Controlled DWG\ROUND2

ID: KJ1

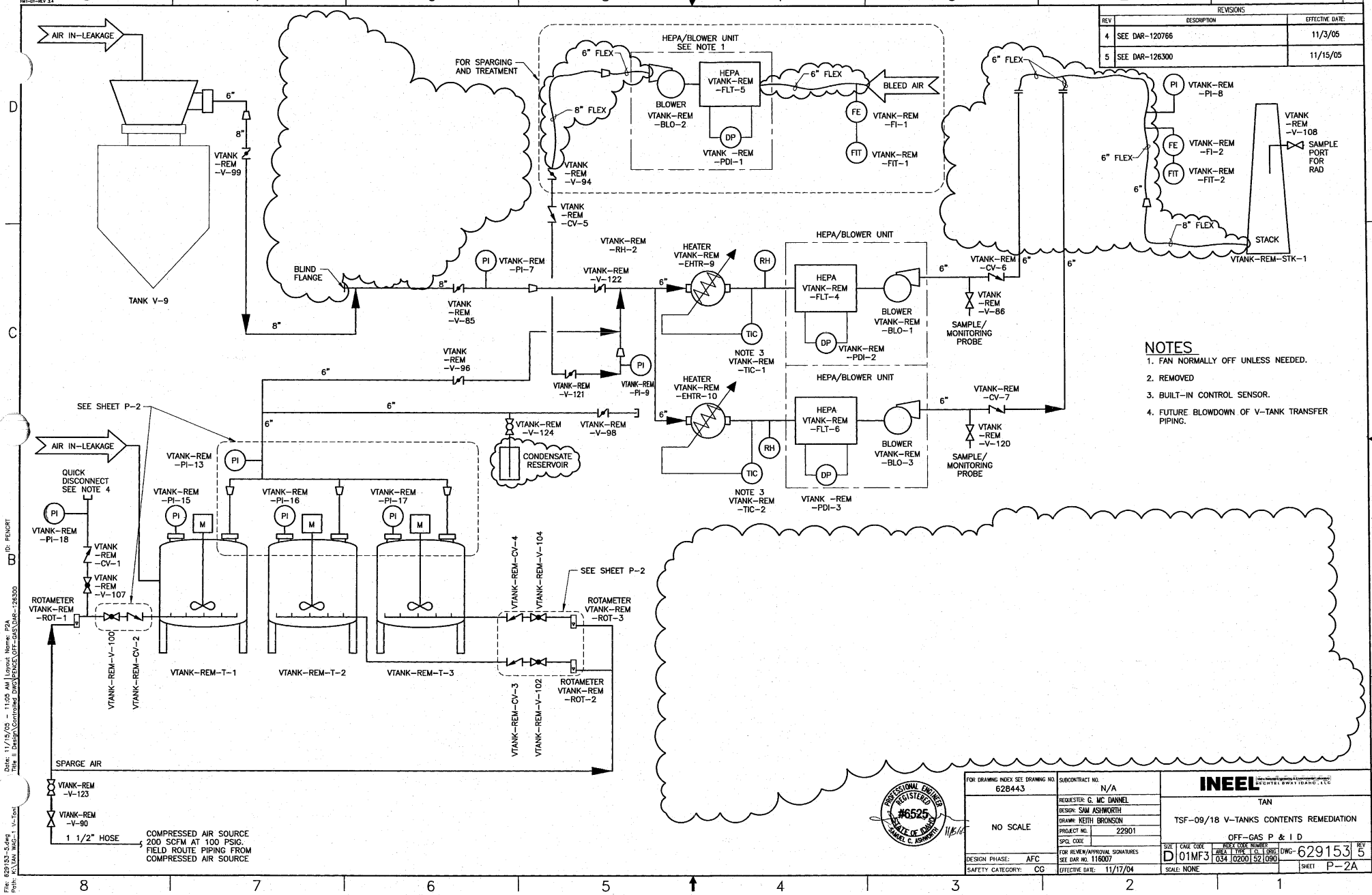

27A
REVISIONS
REV | DESCRIPTION | EFFECTIVE DATE:
4 | SEE DAR-120766 | 11/3/05
5 | SEE DAR-126300 | 11/15/05
AIR IN-LEAKAGE
TANK V-9
VTANK -REM -V-99
6"
8"
FOR SPARGING AND TREATMENT
HEPA/BLOWER UNIT SEE NOTE 1
6" FLEX
8" FLEX
BLOWER VTANK-REM -BLO-2
HEPA VTANK-REM -FLT-5
DP
VTANK -REM -PDI-1
BLEED AIR
FE
VTANK-REM -FI-1
FIT
VTANK-REM -FIT-1
VTANK -REM -V-94
VTANK -REM -CV-5
BLIND FLANGE
PI
VTANK-REM -PI-7
VTANK -REM -V-85
VTANK-REM -RH-2
VTANK-REM -V-122
HEATER VTANK-REM -EHTR-9
RH
TIC
NOTE 3 VTANK-REM -TIC-1
HEPA/BLOWER UNIT
HEPA VTANK-REM -FLT-4
BLOWER VTANK-REM -BLO-1
VTANK-REM -PDI-2
VTANK-REM -CV-6
VTANK -REM -V-86
SAMPLE/ MONITORING PROBE
VTANK -REM -V-96
VTANK-REM -V-121
VTANK-REM -PI-9
HEATER VTANK-REM -EHTR-10
HEPA VTANK-REM -FLT-6
BLOWER VTANK-REM -BLO-3
VTANK -REM -PDI-3
NOTE 3 VTANK-REM -TIC-2
VTANK-REM -CV-7
VTANK -REM -V-120
VTANK-REM -PI-8
VTANK-REM -FI-2
VTANK-REM -FIT-2
VTANK -REM -V-108
SAMPLE PORT FOR RAD
STACK
VTANK-REM-STK-1
SEE SHEET P-2
VTANK-REM -V-124
VTANK-REM -V-98
CONDENSATE RESERVOIR
VTANK-REM -PI-13
QUICK DISCONNECT SEE NOTE 4
VTANK-REM -PI-18
VTANK -REM -CV-1
VTANK -REM -V-107
ROTAMETER VTANK-REM -ROT-1
VTANK-REM -PI-15
VTANK-REM -PI-16
VTANK-REM -PI-17
M
VTANK-REM-V-100
VTANK-REM-CV-2
VTANK-REM-T-1
VTANK-REM-T-2
VTANK-REM-T-3
VTANK-REM-CV-4
VTANK-REM-V-104
VTANK-REM-CV-3
VTANK-REM-V-102
ROTAMETER VTANK-REM -ROT-3
ROTAMETER VTANK-REM -ROT-2
SPARGE AIR
VTANK-REM -V-123
VTANK-REM -V-90
1 1/2" HOSE
COMPRESSED AIR SOURCE 200 SCFM AT 100 PSIG. FIELD ROUTE PIPING FROM COMPRESSED AIR SOURCE
NOTES
1. FAN NORMALLY OFF UNLESS NEEDED.
2. REMOVED
3. BUILT-IN CONTROL SENSOR.
4. FUTURE BLOWDOWN OF V-TANK TRANSFER PIPING.
PROFESSIONAL ENGINEER REGISTERED #6525 STATE OF IDAHO SAMUEL C. ASHWORTH
11/15/05
FOR DRAWING INDEX SEE DRAWING NO. 628443
NO SCALE
DESIGN PHASE: AFC
SAFETY CATEGORY: CG
SUBCONTRACT NO. N/A
REQUESTER: G. MC DANNEL
DESIGN: SAM ASHWORTH
DRAWN: KEITH BRONSON
PROJECT NO. 22901
SPCL CODE
FOR REVIEW/APPROVAL SIGNATURES SEE DAR NO. 116007
EFFECTIVE DATE: 11/17/04
INEEL
TAN
TSF-09/18 V-TANKS CONTENTS REMEDIATION
OFF-GAS P & I D
SIZE D
CAGE CODE 01MF3
DWG-629153
REV 5
SCALE: NONE
SHEET P-2A

REVISIONS		
REV	DESCRIPTION	EFFECTIVE DATE:

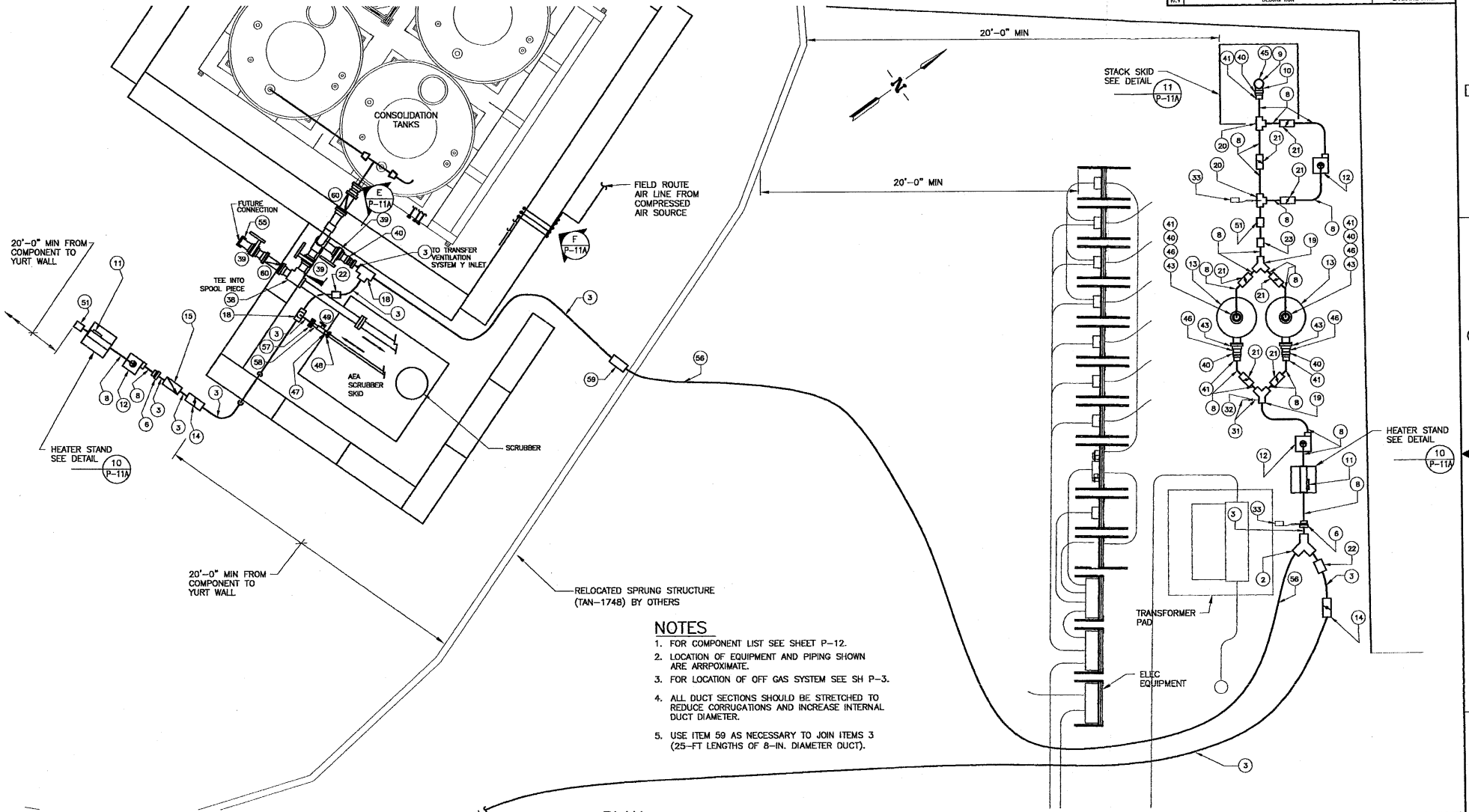

NOTES

1. FOR COMPONENT LIST SEE SHEET P-12.
2. LOCATION OF EQUIPMENT AND PIPING SHOWN ARE ARRPOXIMATE.
3. FOR LOCATION OF OFF GAS SYSTEM SEE SH P-3.
4. ALL DUCT SECTIONS SHOULD BE STRETCHED TO REDUCE CORRUGATIONS AND INCREASE INTERNAL DUCT DIAMETER.
5. USE ITEM 59 AS NECESSARY TO JOIN ITEMS 3 (25-FT LENGTHS OF 8-IN. DIAMETER DUCT).

PLAN

SCALE 3/8"=1'-0"

FOR DRAWING INDEX SEE DRAWING NO. 628443	SUBCONTRACT NO. N/A	INEEL (Idaho National Engineering & Environmental Laboratory) BECHTEL BWXT IDAHO, LLC
SCALE: 3/8" = 1'-0"	REQUESTER: G. MC DANNEL	TAN
	DESIGN: D LOPEZ	TSF-09/18 V-TANKS CONTENTS REMEDIATION
	DRAWN: D LOPEZ	OFF-GAS EQUIPMENT PLAN
	PROJECT NO. 22901	
	SPCL CODE	
	FOR REVIEW/APPROVAL SIGNATURES SEE DAR NO. 116007	
	EFFECTIVE DATE: 11/17/04	

INDEX CODE NUMBER				DESIGN PHASE:	AFC
AREA	TYPE	GL	ORIG	SAFETY CATEGORY:	CG
034	1748	52	090		

SIZE	CAGE CODE	INDEX CODE NUMBER				DWG-629154	REV
		AREA	TYPE	GL	ORIG		
D	01MF3	034	0200	52	090		
SCALE: NOTED						SHEET P-11	

FMT-01-REV 3.4

Date: 11/17/04 - 08:55 AM Layout Name: Sheet 1 ID: KGR

File: 629154.dwg Path: A:\TAN WDG-1 1/-1...\Title II Design\Controlled DWGS\ROUND2

FMT-01-REV 3.4

REVISIONS		
REV	DESCRIPTION	EFFECTIVE DATE:

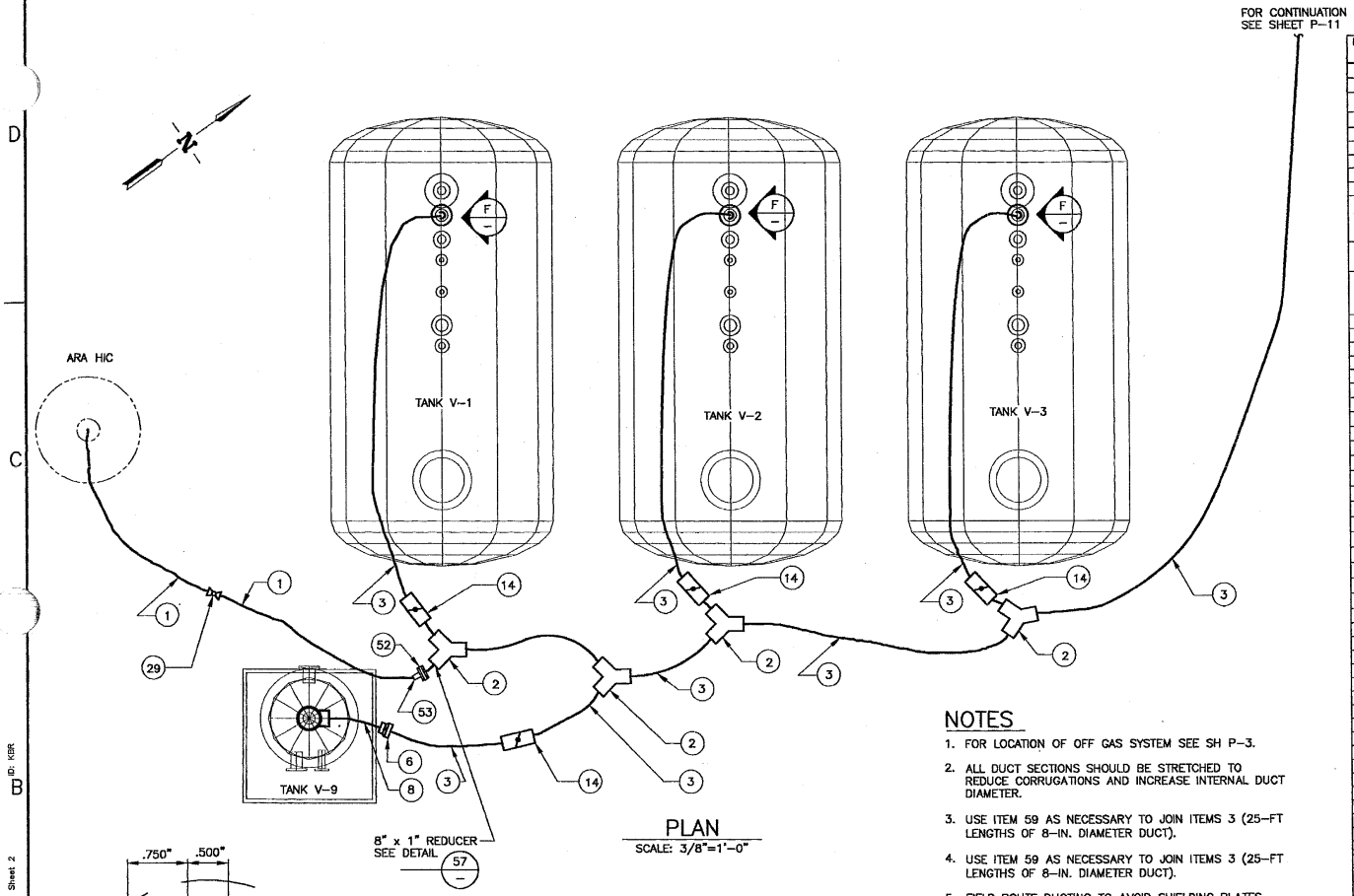

PLAN
SCALE: 3/8"=1'-0"

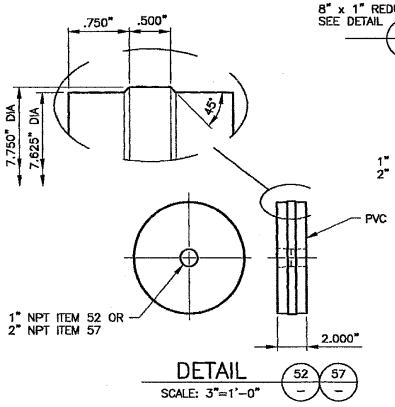

DETAIL 52 57
SCALE: 3"=1'-0"

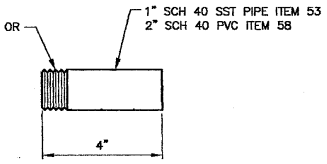

DETAIL 53 58
SCALE: 6"=1'-0"

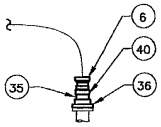

SECTION F
SCALE: 3/8"=1'-0"

NOTES

1. FOR LOCATION OF OFF GAS SYSTEM SEE SH P-3.
2. ALL DUCT SECTIONS SHOULD BE STRETCHED TO REDUCE CORRUGATIONS AND INCREASE INTERNAL DUCT DIAMETER.
3. USE ITEM 59 AS NECESSARY TO JOIN ITEMS 3 (25-FT LENGTHS OF 8-IN. DIAMETER DUCT).
4. USE ITEM 59 AS NECESSARY TO JOIN ITEMS 3 (25-FT LENGTHS OF 8-IN. DIAMETER DUCT).
5. FIELD ROUTE DUCTING TO AVOID SHIELDING PLATES SHOWN ON SHEET P-4. ACTUAL ROUTING MAY BE ON WEST SIDE OF TANKS.

ITEM NO	COMPONENT	LENGTH	QUANTITY
1	1" PVC HOSE TO FIT 1" CAM AND GROOVE HOSE COUPLING ON DRAWING 628814 FOR	40 FT	
2	NFS/RPS # AS49 "Y" FITTING, STAINLESS STEEL, FOR 8" DIA. DUCT"		6
3	NFS/RPS #CG21, 8" DIA. FLEXIBLE DUCT/HOSE WITH 8" COUPLING	25 FT	13 TO 15
4	NFS/RPS # AS132, 8" RUBBER PIPE MENDER		1
5	NFS/RPS # CF03, IN-LINE COUPLING. 8" DIA., STAINLESS STEEL		1
6	NFS/RPS # CR23, REDUCER, 8" TO 6" DIA.		7
8	NFS/RPS #CG52 6" DIA. 2-PLY FLEX DUCT	50 FT	2
9	8" CPVC PIPE, SCH 40 OR 80	12 FT	1
10	6" CPVC PIPE, SCH 40 OR 80	10 FT	1
11	AIR HEATER: 120 VAC, 6 IN. DIAMETER, EM-WX0111R, ELECTRO INDUSTRIES, INC., 2150 WEST RIVER STREET, PO BOX 538, MONTICELLO, MN 55362, PHONE: 800-922-4138 OR 763-295-4138 FAX: 763-295-4434 EMAIL: SALES@ELECTROMN.COM		2
12	AIR MOVER: HEPA/VAC, NFS/RPS FM-34 (SP-505A), 120 VAC, SINGLE PHASE, ¾ BHP @ 3450 RPM, EMAIL: SUPPORT@RPSCT.COM, TELEPHONE: 888-637-7779, FAX: 860-446-1876		3
13	VOC/HG REMOVAL: 400 LB S-GAC, TIGG / N-400 XP, TIGG BREAKTHROUGH DETECTOR INSTALLED, TIGG CORPORATION, 800-925-0011, 412-257-9580, FAX: 412-257-9580-8520, INFO@TIGG.COM, JIM RILEY, JRILEY@TIGG.COM		2
14	NFS/RPS # CF25, 8" IN LINE COUPLING WITH A BUTTERFLY DAMPER		6
15	NFS/RPS #AM13, 8" CHECK VALVE (BACKFLOW PREVENTER)		1
16	REMOVED		
17	2" PIPE TO 7-5/8" REDUCER		1
18	NFS/RPS #08BT08, 8" STAINLESS OR GALVANIZED TEE		1
19	NFS/RPS # AS75, 6" STAINLESS "Y" FITTING		2
20	NFS/RPS #06BT06, 6" STAINLESS OR GALVANIZED TEE		2
21	NFS/RPS # AM12, 6" IN LINE COUPLING WITH A BUTTERFLY DAMPER		7
22	NFS/RPS # CF03-SPT, 8" STAINLESS DUCT COUPLING WITH STATIC PRESSURE		2
23	NFS/RPS # CF02-SPT, 6" STAINLESS DUCT COUPLING WITH STATIC PRESSURE		1
24	REMOVED		
25	REMOVED		
26	REMOVED		
27	MAGNEHELIC PRESSURE/VACUUM GAUGE -6 TO + 6 IWG.		1
28	REMOVED		
29	1" BALL VALVE, WITH BARBED ENDS TO FIT ITEM 1, WITHSTAINLESS WORM CLAMPS		1
30	REMOVED		
31	1/4" SST TUBING, 0.062 WALL	2FT	
32	SWAGELOK, WHITEY 1/4" BALL VALVE, SS-43S4		1
33	DIGITAL HYGROMETER, DWYER INSTRUMENTS, INC. MODEL 485-2		2
34	REMOVED		
35	6" PVC SCHEDULE 40 PIPE	30 FT	
36	6" PVC 150" FLANGE, SOCKET TYPE		8
37	6" PVC 90 DEG ELBOW, SOCKET TYPE		1
38	6" PVC TEE, SOCKET TYPE		2
39	6" PVC BUTTERFLY VALVE, SOCKET TYPE		3
40	NFS/RPS # AS131, 6" RUBBER PIPE MENDER		9
41	NFS/RPS # CF02 IN-LINE COUPLING. 6" DIA., STAINLESS STEEL		5
42	REMOVED		
43	6" CPVC 150" FLANGE, SOCKET TYPE (FOR CHARCOAL FILTER FLANGES)		4
45	REMOVED		
46	6" CPVC SCHEDULE 40 PIPE	3 FT	
47	2" PVC SCHEDULE 40 PIPE	20 FT	
48	2" PVC 150" FLANGE, SOCKET TYPE		1
49	2" PVC BUTTERFLY VALVE, SOCKET TYPE		1
51	NFS/RPS # KTL06-SP - 6", 6" INLINE FLOW INDICATOR, LOW FLOW UNIT		2
52	PVC TRANSITION PIECE, 1" PIPE TO 8" DUCT		1
53	PIPE TRANSITION NIPPLE, 1" SCH 40 SST PIPE, WITH 2" DIA. WORM CLAMP		1
54	NFS/RPS # CL05, HOSE CLAMP, 4-8"		110
55	6" PVC PIPE CAP		1
56	8" INSULATED FLEXIBLE DUCT	75 FT	
57	PVC TRANSITION PIECE, 2" PIPE TO 8" DUCT		1
58	2" PVC SCH 40 PIPE TRANSITION NIPPLE, PIPE, WITH 3" DIA. WORM CLAMP		1
59	NFS/RPS # CF03 IN-LINE COUPLING. 8" Dia., STAINLESS STEEL.		AR
60	NFS/RPS # AM12, 6"STAINLESS CHECK VALVE (BACKFLOW PREVENTER) WITH 150#		2
61	SWAGELOK BULKHEAD UNION # SS-810-61		1
62	SWAGELOK BALL VALVE # SS-45S8		1
63	1/2" STAINLESS STEEL TUBING, 0.035" WALL	2 FT	
64	TS 2" X 2" X 1/4" WALL CARBON STEEL TUBING	100 FT	
65	9" SCHEDULE 40 CARBON STEEL PIPE	6 IN.	
66	1/4" THICK CARBON STEEL PLATE	3 IN. X 20 IN.	
67	8" CPVC 90 DEG ELBOW, SOCKET TYPE, SCH 40		1
68	PIPE HANGER, ANVIL PART NUMBER "FIGURE 100"		2

FOR DRAWING INDEX SEE DRAWING NO. 628443

SCALE: 3/8" = 1'-0"

SCALE: 3" = 1'-0"

INDEX CODE NUMBER: AREA 034 | TYPE 1 | CL 0200 | SEQ 090

DESIGN PHASE: AFC

SAFETY CATEGORY: CG

SUBCONTRACT NO. N/A

REQUESTER: G. Mc DANNEL

DESIGN: D LOPEZ

DRAWN: D LOPEZ

PROJECT NO. 22901

SPCL CODE:

FOR REVIEW/APPROVAL SIGNATURES SEE DAR NO. 116007

EFFECTIVE DATE: 11/17/04

INEEL — BECHTEL BWXT IDAHO, LLC

TAN

TSF-09/18 V-TANKS CONTENTS REMEDIATION

OFF-GAS EQUIPMENT PLAN, DETAILS, SECTION AND PARTS LIST

SIZE D | CAGE CODE 01MF3 | INDEX CODE NUMBER AREA 034 | TYPE 0200 | CL 52 | SEQ 090 | DWG-629155 | REV

SCALE: NOTED | SHEET P-12

File: 629155.dwg
Path: E:\TAN WAG-1 V-Tg
Date: 11/17/04 - 08:47 A.M. | Layout Name: Sheet 2
Title: B Design\Controlled DWG\ROUND2
ID: KBR

REVISIONS		
REV	DESCRIPTION	EFFECTIVE DATE:
3	DRAWING CANCELED, SEE DAR-126039	10/31/05

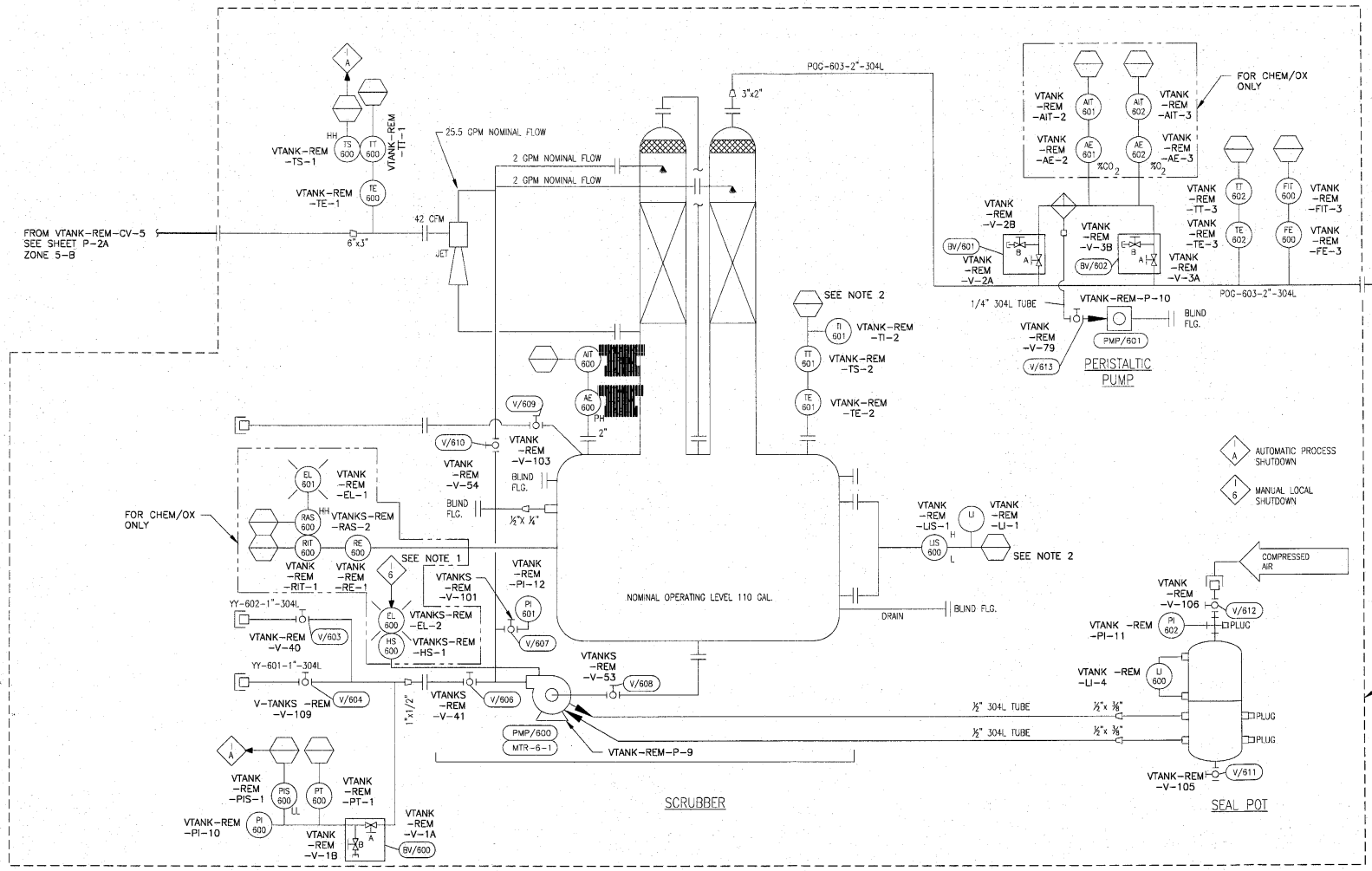

NOTES

1. COMPUTER FUNCTION DISCONNECTED, LOCAL HAND SWITCH ONLY (CHEM/OX).
2. COMPUTER FUNCTION NOT AVAILABLE, LOCAL ONLY WHERE NOTED.

THIS SHEET MADE FROM AEA TECHNOLOGY DRAWING 2179-1-064

CANCELED

FOR DRAWING INDEX SEE DRAWING NO. 628443	SUBCONTRACT NO. N/A	INEEL (Idaho National Engineering & Environmental Laboratory) BECHTEL BWXT IDAHO, LLC
NO SCALE	REQUESTER: G. MC DANNEL DESIGN: SAM ASHWORTH DRAWN: KEITH BRONSON PROJECT NO. 22901 SPCL. CODE	TAN TSF-09/18 V-TANKS CONTENTS REMEDIATION SCRUBBER SKID P & I D
DESIGN PHASE: AFC	FOR REVIEW/APPROVAL SIGNATURES SEE DAR NO. 116007	SIZE D · CAGE CODE 01MF3 · INDEX CODE NUMBER AREA 034 TYPE 0200 SI 52 DBG 090 · DWG-629159 · REV 3
SAFETY CATEGORY: CG	EFFECTIVE DATE: 11/17/04	SCALE: NONE · SHEET P-2B

File: 629159-3.dwg
Path: X:\VAN WGC-1
Date: 10/27/05 - 12:58 PM | Layout Name: P2B
User | Title # | Design\Contrcted DWG:DAR-126039
© PENCRT

REVISIONS		
REV	DESCRIPTION	EFFECTIVE DATE

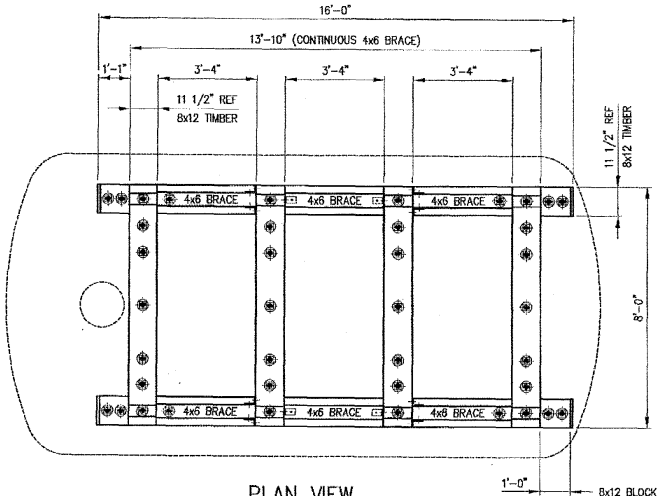

PLAN VIEW
SCALE: 1/2"=1'-0"

8x12 BLOCK AT EACH END OF SKID (4 BLOCKS TOTAL). COUNTERBORE BLOCK AND BOTTOM 8x12 TIMBER TO ACCEPT SIMPSON BP BEARING PLATE WASHERS. CONNECT BLOCKS TO 8x12 BOTTOM TIMBER USING 3/4"-10 UNC THREADED ROD AND HEX NUTS

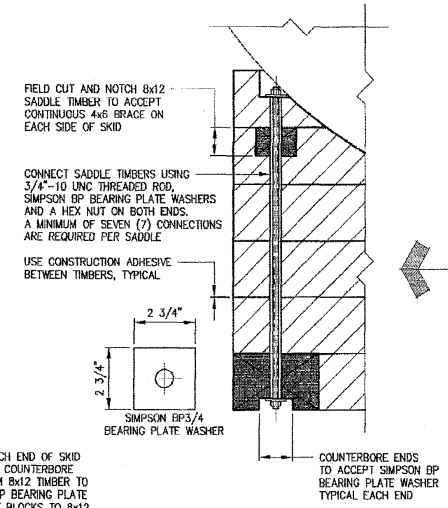

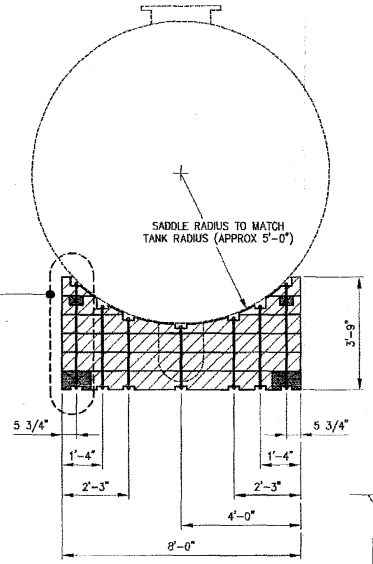

SECTION
SCALE: 1/2"=1'-0"

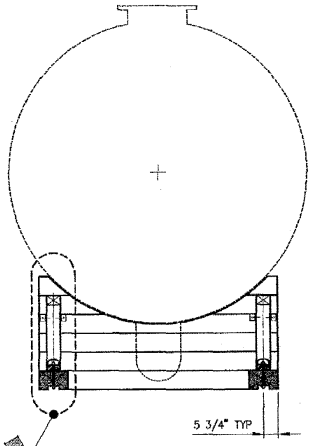

SECTION
SCALE: 1/2"=1'-0"

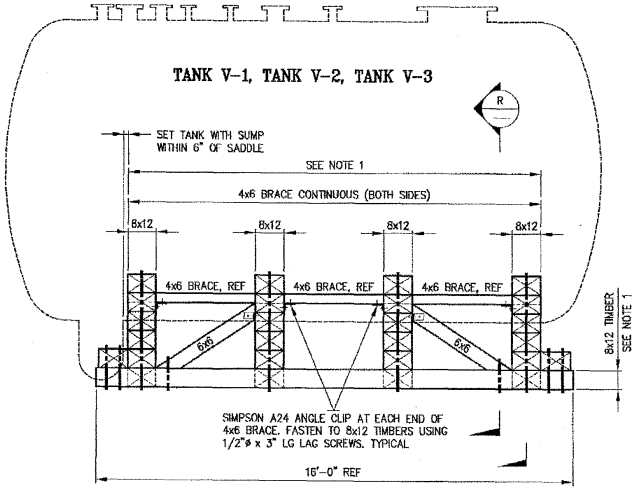

SIDE ELEVATION VIEW
SCALE: 1/2"=1'-0"

NOTE: PROTECTIVE WRAPPING AROUND TANK NOT SHOWN FOR CLARITY

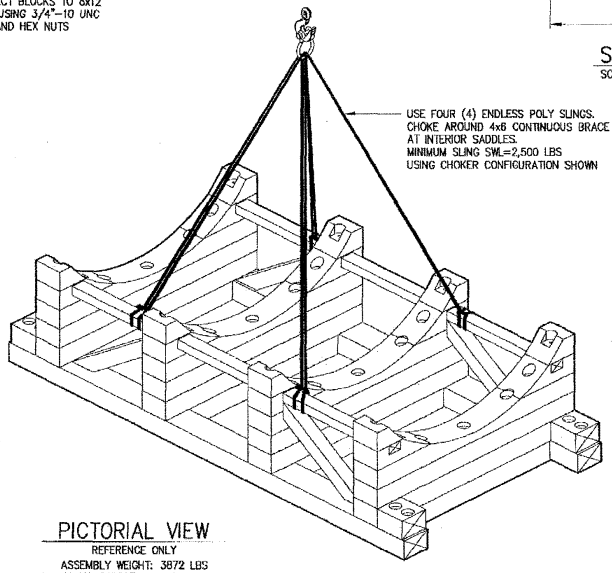

PICTORIAL VIEW
REFERENCE ONLY
ASSEMBLY WEIGHT: 3872 LBS
INDIVIDUAL SADDLE WEIGHT: 800 LBS

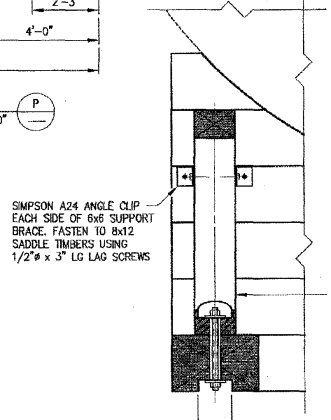

NOTES:

1. SUPPORT CRIBBING MEMBERS SHALL BE DOUGLAS FIR LARCH (NORTH), NO.2 OR BETTER.
2. PROVIDE BEARING PADS AS NEEDED ON SADDLES TO PROTECT WRAPPING.
3. TANKS MUST BE SECURED TO TRANSPORT TRAILERS PER APPROVED TRANSPORT PLAN.
4. IF TANKS ARE SET IN STAGING AREA, BEARING CAPACITY OF SOIL SHALL BE 3000 PSF MINIMUM. SET TANKS ONLY ON LEVEL GROUND.

PROFESSIONAL ENGINEER REGISTERED 6775 STATE OF IDAHO PATRICK WAYNE BRAGASSA

FOR DRAWING INDEX SEE DRAWING NO. 628443	SUBCONTRACT NO. N/A	INEEL Bechtel BWXT Idaho, LLC
SCALE: 1/2" = 1'-0"	REQUESTER: D.F. NICKELSON	TAN
	DESIGN: P.W. BRAGASSA	TSF-09/18 V-TANKS REMEDIATION
	DRAWN: B.E. RHODES	TRAILER CRIBBING LAYOUT
	PROJECT NO. 22901	
	SPCL CODE:	
DESIGN PHASE: AFC	FOR REVIEW/APPROVAL SIGNATURES SEE DAR NO. 121832	
SAFETY CATEGORY: CG	EFFECTIVE DATE: 4/5/05	

SITE	CASE CODE	INDEX TYPE NUMBER (AREA / TYPE / SEQ / DIST)	DWG	REV
D	01MF3	034 9999 02 090	630323	

SCALE: NOTED | SHEET C-19

Date: 04/05/05 - 7:32 AM | Layout name: Layout1 | A: Tsf II Design\Controlled Dwgs\630323.dwg | ID: EBR

File: 630323.dwg
path: A:\TAN WG-1 1-1

4	3	2	1	SHEET
–	–	–	1	REV

REV STATUS OF SHEETS

REVISIONS

REV	DESCRIPTION	EFFECTIVE DATE:
1	SEE DAR-125963	11/3/05

NOTES:

1. FIELD ROUTE EXISTING 4" ENCASEMENT PIPE (GFE) APPROXIMATELY AS SHOWN. CUT EXISTING ENCASEMENT PIPE ONCE IT HAS BEEN ROUTED INTO THE CONTAINMENT MAT, (MIN 2'-0" INSIDE OF MAT). INNER 1 1/2" HDPE PIPE (GFE) SHALL EXTEND BEYOND THE 4" ENCASEMENT PIPE A MIN OF 8" AND BE CUT OFF SQUARE.

2. UPON COMPLETION OF TANK FILLING REPLACE ITEM 14 (RADIAL PREMIXER) WITH ITEM 15 (DUST PLUG). THREE DUST PLUGS (ITEM 15) WILL BE REQUIRED OVERALL, ONE FOR EACH V-TANK.

3. OFF-SITE WELDING SHALL BE PER AWS D1.1, USING ITEM XX WITH VISUAL INSPECTION PER AWS D1.1 SECTION 6. ON-SITE WELDING SHALL BE PER THE INEEL WELDING MANUAL USING WELD PROCEDURE WPS C3.5 OR C6.10, AS APPLICABLE.

4. APPLY ONE COAT OF PRIMER (ITEM 28), FOLLOWED BY ONE COAT OF PAINT (ITEM 27) MINIMUM.

5. GASKET MATERIAL MAY BE SUBSTITUTED WITH EITHER NITROL OR BUNA-N RUBBER MATERIAL.

6. ALL THREADED PIPE CONNECTIONS SHALL BE SEALED USING ITEM 51 AND ITEM 52 TOGETHER.

7. SPRAY SHIELDS SHALL BE INSTALLED ON ALL FLANGES. SHIELDS SHALL BE FABRIC IMPREGNATED WITH RUBBER MATERIAL.

8. FABRICATE, INSTALL, INSPECT, AND TEST ALL LIQUID PIPING IN ACCORDANCE WITH ASME B31.3 CATEGORY D REQUIREMENTS.

9. TORQUE VALUES FOR FLANGE BOLTS SHALL BE IN ACCORDANCE WITH THE GASKET MANUFACTURERS WRITTEN RECOMMENDATIONS FOR THE SIZE AND SERVICE CONDITIONS AND ASME SECTION VIII, DIVISION 1, APP. 2.

10. PIPE SYSTEMS SHALL BE TESTED IN ACCORDANCE WITH THE GENERAL REQUIREMENTS OF ASME B31.3 PARAGRAPH 345, AND A345 AS APPLICABLE, AND SHALL INCLUDE THE FOLLOWING:

    A) ALL 1 1/2" HDPE PRESSURE PIPING AND THE BOSTON ROYAL FLEX H119624 DISCHARGE HOSE SHALL BE INITIALLY SERVICE LEAK TESTED IN ACCORDANCE WITH ASME B31.3 PARAGRAPH 345.7. TEST PRESSURE SHALL BE A MINIMUM OF THE OPERATING PRESSURE, NOT TO EXCEED 90 PSIG. A SUBSEQUENT SUPPLEMENTAL HYDROSTATIC LEAK TEST SHALL BE PERFORMED IN ACCORDANCE WITH ASME B31.3 PARAGRAPH A345.4 AT A TEST PRESSURE OF 195 ±5 PSIG. THE TEST MEDIUM SHALL BE PLANT WATER. THE CONSOLIDATION TANKS, V-TANKS, AND VORTEX VENTURES RADIAL PREMIXER SHALL NOT BE PRESSURIZED.

    B) ALL HDPE ENCASEMENT PIPING SHALL BE PNEUMATICALLY LEAK TESTED IN ACCORDANCE WITH ASME B31.3 PARAGRAPH 345.7. TEST PRESSURE SHALL BE 5 PSIG. TEST MEDIUM SHALL BE AIR.

    C) ALL STEEL PIPING SHALL BE HYDROSTATIC LEAK TESTED IN ACCORDANCE WITH ASME B31.3 PARAGRAPH 345.4. TEST PRESSURE SHALL BE 195 ±5 PSIG FOR THE HYDROSTATIC TEST. THE TEST MEDIUM SHALL BE PLANT WATER. THE CONSOLIDATION TANKS, V-TANKS, AND VORTEX VENTURES RADIAL PREMIXER SHALL NOT BE PRESSURIZED.

    D) PIPING, VALVES, FITTINGS, AND EQUIPMENT SHALL BE VISUALLY FREE OF GREASE, CUTTING OILS, LOOSE PARTICLES, CHIPS, OR OTHER FOREIGN MATTER.

    E) ALL STEEL PIPING AND FITTINGS FOR LIQUID SERVICE SHALL BE FLUSHED WITH WATER UNTIL WATER IS VISUALLY CLEAR. ON-SITE, WATER SOURCE AND DISPOSAL SHALL BE AS DIRECTED BY THE CONTRACTOR'S REPRESENTATIVE. FLUSHING SHALL BE COMPLETED PRIOR TO INSTALLING THE SYSTEM.

11. SLOPE 4" ENCASEMENT PIPE A MINIMUM OF 1/8" PER FOOT TOWARDS THE CONSOLIDATION TANK CONTAINMENT PAN. PROVIDE A PIPE SUPPORT EVERY 10 FT FOR THE ENTIRE LENGTH OF THE ENCASED PIPE.

12. SUPPORT FLEX HOSE IN SUCH A MANNER THAT IT WILL DRAIN TO LOW POINT DRAIN AT CONSOLIDATION TANK CONTAINMENT PAN.

13. CONTAINMENT MAT SHALL BE "SEAMAN CORP # 8130XR-5 REINFORCED SHEETING, .030 THICK", PROVIDED BY OTHERS.

14. POWER REQUIREMENT FOR THE EMCO SONO-TRAK FLOW METER IS 10 W AT 115 V, SINGLE PHASE.

15. POWER REQUIREMENT FOR ITEM 22 IS 2.0 KW AT 230 V, 3 PHASE.

16. POWER REQUIREMENTS FOR THE VFD, ITEM 22 IS 5 KW AT 208 V, 3 PHASE

17. SCAFFOLD TO BE PROVIDED BY OTHERS APPROXIMATELY AS SHOWN. IT WILL PROVIDE: ACCESS FOR MANUAL ENGAGEMENT AND DISENGAGEMENT THE RADIAL PREMIXER (ITEM 14) WITH THE CAM AND GROOVE COUPLER ON THE V-TANK; ACCESS FOR INSTALLING THE DUST PLUG (ITEM 15) IN THE CAM AND GROOVE COUPLER ON THE V-TANK; AND SERVICING OF THE V-TANK'S INTERNAL CAMERA.

QTY REQD -2	QTY REQD -1	SAFETY CAT.	PART OR IDENTIFYING NO.	NOMENCLATURE OR DESCRIPTION	MATERIAL/SPECIFICATION OR VENDOR NAME	ITEM NO.
	4	CG		BOLT, HEX HD 5/8-11 UNC-2A X 2 3/4" LG	304 SST ASTM A193 GR B8	59
	4	CG		NUT, HEX 5/8-11 UNC-2B	GALLING-RESISTANT NITRONIC 60R ASTM A194 GR 8S (UNS S21800)	58
	4	CG		WASHER, LOCK, 5/8	SST COML GRADE	57
	4	CG		BOLT, HEX HD 1/2-13 UNC-2A X 2 3/4" LG	304 SST ASTM A193 GR B8	56
	4	CG		NUT, HEX 1/2-13 UNC-2B	GALLING-RESISTANT NITRONIC 60R ASTM A194 GR 8S (UNS S21800)	55
	4	CG		WASHER, LOCK, 1/2	SST COML GRADE	54
						53
6	AR	CG		TEFLON TAPE	COML GRADE	52
6	AR	CG	#100 VIRGIN HEAVY DUTY PIPE SEALANT	PIPE JOINT SEALANT	RECTOR SEAL	51
AR		CG		WELD FILLER MATERIAL	E7018 AWS A5.1	50
	1	CG		NIPPLE, CLOSE, 1 1/2"	CS ASTM A53 GR B	49
	8	CG		BOLT, HEX HD 3/4-10 UNC-2A X 2 1/2" LG	CS ASTM A193, GR B7	48
	8	CG		NUT, HEX 3/4-10 UNC-2B	CS ASTM A194, GR 2H	47
	8	CG		WASHER, LOCK, 3/4	CS COML GRADE	46
	4	CG		BOLT, HEX HD 1/2-13 UNC-2A X 2 3/4" LG	CS ASTM A193, GR B7	45
	4	CG		NUT, HEX 1/2-13 UNC-2B	CS ASTM A194, GR 2H	44
	4	CG		WASHER, LOCK, 1/2	CS COML GRADE	43
	2	CG		CLAMP, DOUBLE BOLTED 4 1/2" ID, SST	GOLDSTEIN-SCHWARTZ INC	42
5	AR	CG		GASKET MATERIAL, GRAFOIL #150, 1/16" THK	COML GRADE	41
AR		CG			PLATE, 1/4 THK, CS ASTM A36	40
AR		CG			TUBE, 2x2x1/4 HSS ASTM A500 GR B	39
	AR	CG			PIPE, 1 1/2" SCHED 80 CS, BLACK ASTM A53 GR B	38
	1	CG		FLANGE, SCRD, FORGED 1 1/2", 150# ANSI B16.5, RF	CS ASTM A105	37
	2	CG		NIPPLE, CLOSE, 1 1/2"	TP304L SST ASTM A312 AND ANSI B36.19	36
	1	CG		TEE, 1 1/2" FORGED, SCREWED 3000#	SST ASTM A182	35
	1	CG		UNION, 1 1/2" SCRD, 3000#	CS ASTM A105	34
	1	CG		FLANGE, SCRD, FORGED 2", 150# ANSI B16.5, RF	SST ASTM 182	33
	1	CG		FLANGE, SCRD, FORGED 1 1/2", 150# ANSI B16.5, RF	SST ASTM A182	32
	2	CG	1052869	FLANGE, POLYETHYLENE, 1 1/2" ADAPTER, HDPE, SDR9.0 PE340, W/BACKUP RING	CHEVRON PHILLIPS CHEMICAL CO. LP	31
	1	CG		ELBOW, 45° 1 1/2" SCRD, 3000#	CS ASTM A105	30
	1	CG		REDUCING BUSHING, 2 X 1 1/2 THREADED FORGED	SST ASTM A182	29

PARTS LIST

QTY REQD -2	QTY REQD -1	SAFETY CAT.	PART OR IDENTIFYING NO.	NOMENCLATURE OR DESCRIPTION	MATERIAL/SPECIFICATION OR VENDOR NAME	ITEM NO.
AR		CG	ZAP-IT	METAL PRIMER	SPECTRA TONE	28
AR		CG	950-76	OIL BASE METAL PAINT, GREEN	SPECTRA TONE	27
	1	CG		REDUCING BUSHING, 1 1/2" X 1" THREADED, FORGED	SST ASTM A182	26
4		CG	UB 1 1/2 PA	U-BOLT	UNISTRUT CORP.	25
	2	CG		NIPPLE, CLOSE, 1"	TP304L SST ASTM A312 AND ANSI B36.19	24
						23
	1	CG	SCW612A	PORTABLE HOPPER/SCREW CONVEYOR	A & R EQUIPMENT SALES INC	22
	2	CG	5484K25	WHIP CHECK, 1 1/2"	MC MASTER-CARR	21
	AR	CG	124PS	PVC CORRUGATED HOSE 4.5" ID	PACIFIC ECHO, IND	20
	1	CG	FC03052P02	COUPLER, REDUCER, #52, 2"X1 1/2"	VICTAULIC	19
	1	CG	PL020077PT0	COUPLING, STANDARD FLEXIBLE, 2" STYLE 77	VICTAULIC	18
	1	CG	PL040077PT0	COUPLING, STANDARD FLEXIBLE, 4" STYLE 78	VICTAULIC	17
						16
2	3	CG	400-DP-MI	DUST PLUG	DIXON ANDREWS	15
	1	CG	CH2-PRJ2-01	RADIAL PREMIXER, 4", W/4" CAMLOCK NOZZLE OUTLET, PREWETTING	VORTEX VENTURES	14
						13
	1	CG	SS-65TF16	BALL VALVE, 1" SST	SWAGELOK	12
						11
						10
						9
	2	CG	S-67TF24	VALVE, BALL, 1 1/2" 150# CLASS	SWAGELOK	8
						7
						6
	1		631297-2	ASSEMBLY		5
	3		631297-1	ASSEMBLY		4
						3
	1	CG	-2	ASSEMBLY		2
		CG	-1	INSTALLATION		1

PARTS LIST

DASH NO.	NEXT ASSY
1	FINAL

APPLICATION

DIMENSIONING AND SYMBOLOGY PER ASME Y14.5M-1994 AND STD-11
UNLESS OTHERWISE SPECIFIED
SURFACE ROUGHNESS: 125√
DIMENSIONS AND TOLERANCES ARE IN INCHES
TOLERANCES: DECIMALS: X = ± .1, XX = ± .03, XXX = ± .000
FRACTIONS ± 1/8
ANGULAR ± 1°
DO NOT SCALE DRAWING

PROFESSIONAL ENGINEER REGISTERED 7561 STATE OF IDAHO RANDY R. HEYRONI

REQUESTER: MARK BODILY
DESIGN: DARYL LOPEZ
DRAWN: ROB HERGESHEIMER
PROJECT NO.
SPCL CODE
FOR REVIEW/APPROVAL SIGNATURES SEE DAR NO. 124982
EFFECTIVE DATE: 8/16/05

Idaho Cleanup Project CH2M•WG IDAHO, LLC

TAN

TSF-09/18 V-TANKS REMEDIATION

FILL PIPING INSTALLATION

SIZE	INDEX CODE NUMBERS: AREA	TYPE	SL	DRBC	DWG-	REV
D	034	0300	53	136	631295	1

SCALE: NONE SHEET 1 OF 4

FMT-01-REV 4

ID: RDH5

Date: 11/03/05 – 9:23 AM | Layout Name: SH-1
Title II Design\Controlled DWG\heng\dar-125963

File: 631295-1.dwg
Path: K:\TAN WAG-1 V-Tan

FMT-02-REV 4

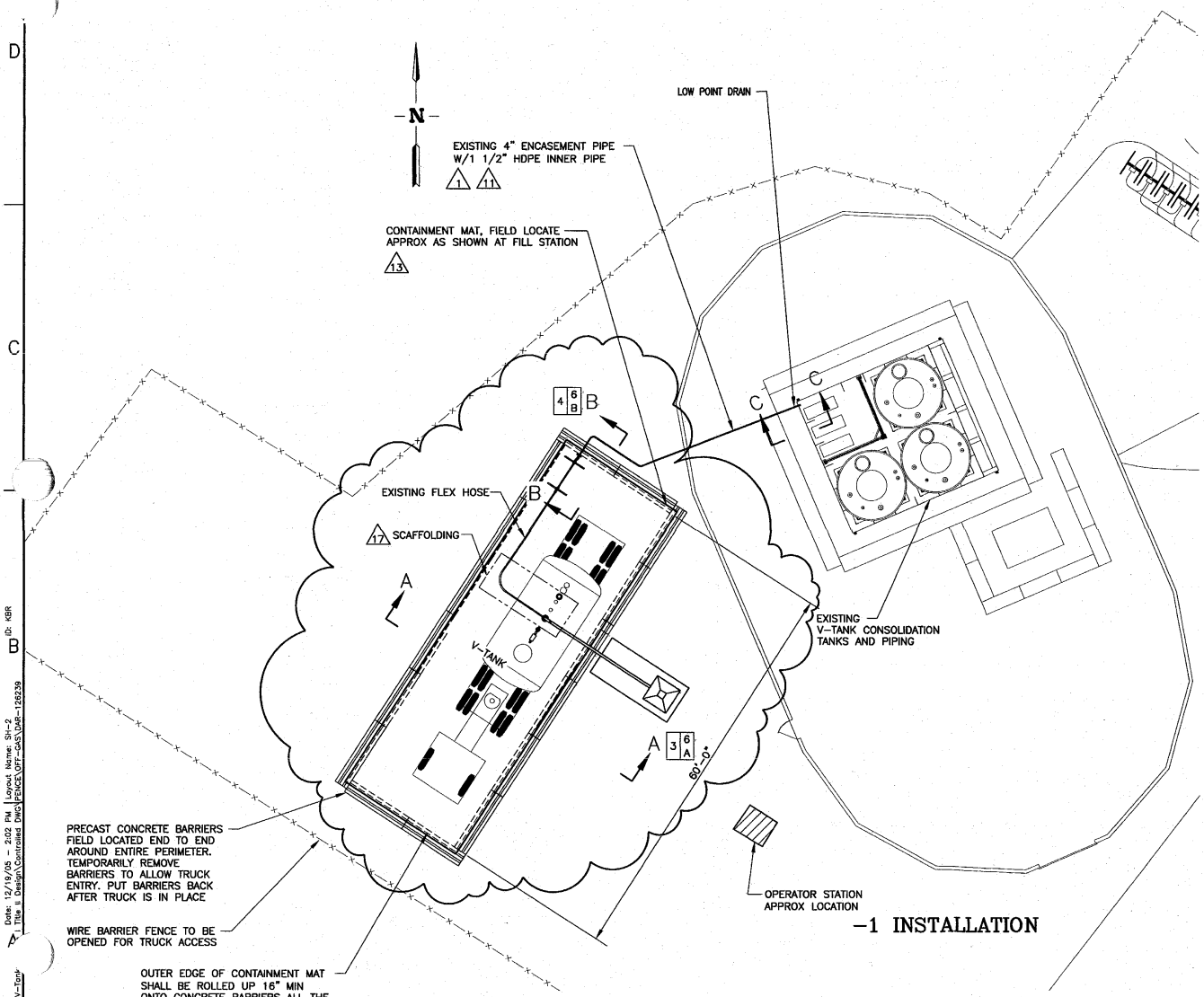

-1 INSTALLATION

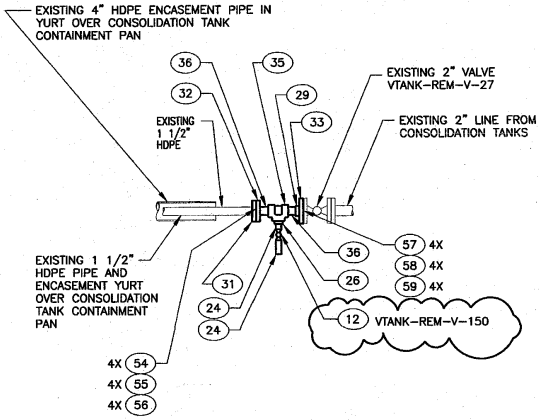

SECTION C-C
NTS

SIZE	INDEX CODE NUMBER: AREA	TYPE	CL	DOC.	DWG-	REV
D	032	0300	53	136	631295	1

SCALE: 1 1/2"=1'-0" SHEET 2

File: 63129502-1.dwg
Path: K:\TAN WAG-1 V-Tank\
Date: 12/19/05 - 2:02 PM | Layout Name: Sit-2
Title II Design\Controlled DWG\FENCE\OFF-GAS\DAR-126239
ID: KBR

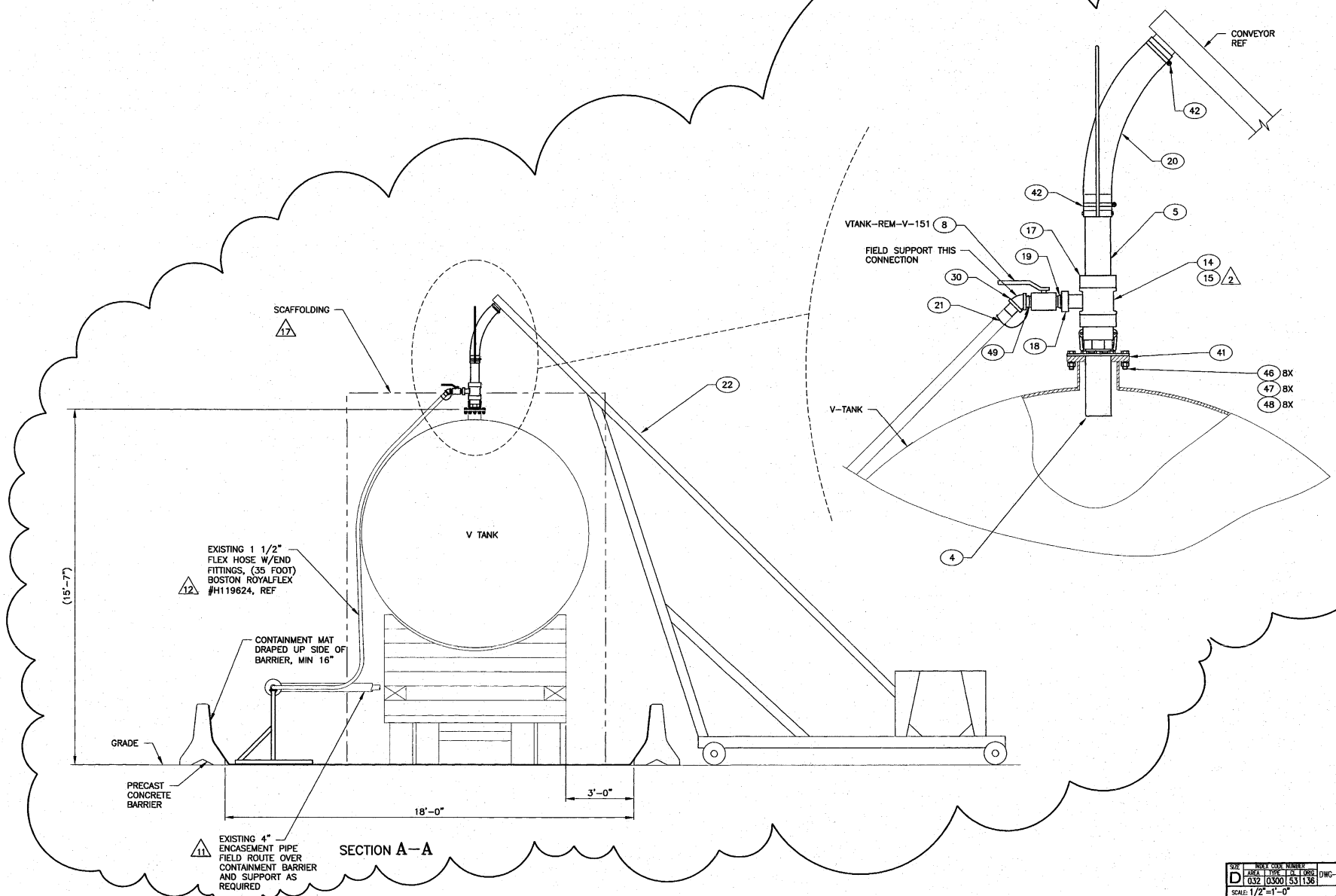

SECTION A-A

SIZE	INDEX CODE NUMBER					REV
	AREA	TYPE	CL	ORIG		
D	032	0300	53	136	DWG- 631295	1
SCALE: 1/2"=1'-0"					SHEET 3	

FMT-02-REV 4

File: 63129503-1.dwg Path: K:\TAN WAG-1 V-Tan Date: 12/21/05 - 8:53 AM Layout Name: SECTION A Title II Design\Controlled DWG\PENCE\OFF-GAS\DAR-126239 ID: KBR

FMT-D1-REV 4

REVISIONS		
REV	DESCRIPTION	EFFECTIVE DATE:
1	SEE DAR-125963	11/3/05

NOTES:

1. ALL THREADED PIPE CONNECTIONS SHALL BE SEALED USING ITEM 22 AND 23 TOGETHER.
2. THIS CONFIGURATION WILL BE NEEDED FOR EACH OF THE THREE V-TANKS.
3. GASKET MATERIAL: MAY BE SUBSTITUTED WITH EITHER NITROL OR BUNA-N RUBBER MATERIAL.

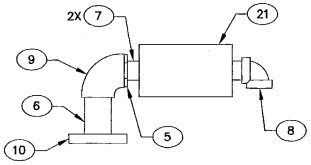

-2 ASSEMBLY
SCALE: NONE

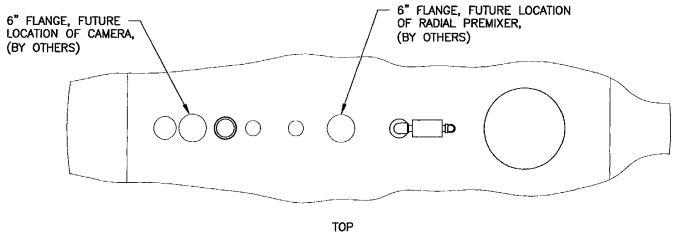

TOP

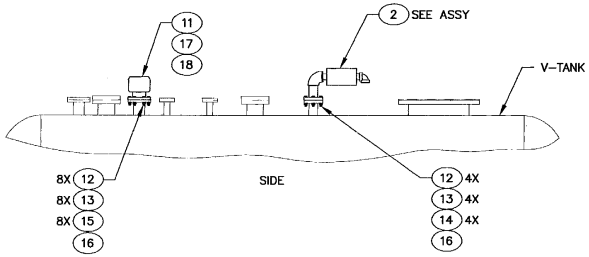

SIDE

-1 INSTALLATION 2
SCALE: 1/2"=1'-0"

QTY REQD -2	QTY REQD -1	SAFETY CAT.	PART OR IDENTIFYING NO.	NOMENCLATURE OR DESCRIPTION	MATERIAL/SPECIFICATION OR VENDOR NAME	ITEM NO.
AR		CG		TEFLON TAPE	COML GRADE	23
AR		CG	#100 VRGN HEAVY DUTY PIPE SEALANT	PIPE JOINT SEALANT	RECTOR SEAL	22
1		CG	0-007-0-42-N2-NU -00-00-Z86177D	FILTER, HEPA, 2" NPT BOTH ENDS WATER RESISTANT GLASS	FLANDERS	21
						20
						19
	1	CG	52155K88	DUST CAP, 4" CAM AND GROOVE 150 PSI	MCMASTER-CARR, CAT#104	18
	1	CG	52155K48	F-ADAPTER, 4" CAM AND GROOVE 150 PSI, NPT-MALE	MCMASTER-CARR, CAT#104	17
	AR	CG		GASKET MATERAIL, GRAFOIL #150, 1/16" THK	COML GRADE	16
	8	CG		BOLT, HEX HD 5/8-11 UNC-2A X 3" LG	CS ASTM A193	15
	4	CG		BOLT, HEX HD 5/8-11 UNC-2A X 2 1/2" LG	CS ASTM A193	14
	12	CG		NUT, HEX 5/8-11 UNC-2B	CS ASTM A194	13
	12	CG		WASHER, LOCK, 5/8	CS COML GRADE	12
	1	CG		FLANGE, SCRD 4", 150#	CS ASTM A105	11
1		CG		FLANGE, SCRD 3", 150#	CS ASTM A105	10
1		CG		ELBOW, 90° 3" SCRD, 150#	CS ASTM A216	9
1		CG		ELBOW, 90° 2" SCRD, 150#	CS ASTM A216	8
2		CG		NIPPLE, CLOSE 2" SCHED 40	CS ASTM A53 GRADE B	7
1		CG		NIPPLE 3" X 6" LG SCHED 40	CS ASTM A53 GRADE B	6
1		CG		BUSHING, REDUCING 3"X2"	CS ASTM A216	5
						4
						3
	1	CG	-2	ASSEMBLY		2
		CG	-1	INSTALLATION		1

PARTS LIST

-1	FINAL
DASH NO.	NEXT ASSY
APPLICATION	

DIMENSIONING AND SYMBOLOGY PER ASME Y14.5M-1994 AND STD-11
UNLESS OTHERWISE SPECIFIED
SURFACE ROUGHNESS 125
DIMENSIONS AND TOLERANCES ARE IN INCHES
TOLERANCES: .X = ±.1
DECIMALS: .XX = ±.03
.XXX = ±.010
FRACTIONS ±1/8
ANGULAR ±2°
DO NOT SCALE DRAWING

PROFESSIONAL ENGINEER REGISTERED 7561 STATE OF IDAHO RANDY R. HERGESHEIMER 11-3-05

REQUESTER: MARK BODILY
DESIGN: DARYL LOPEZ
DRAWN: ROB HERGESHEIMER
PROJECT NO.
SPCL CODE
FOR REVIEW/APPROVAL SIGNATURES SEE DAR NO. 124982
EFFECTIVE DATE: 8/16/05

Idaho Cleanup Project CH2MHILL IDAHO, LLC

TAN
TSF-09/18 V-TANKS REMEDIATION
VENT AND GROUT CAP INSTALLATION

SIZE	INDEX CODE NUMBER AREA	TYPE	CL	DWG	DWG-	REV
D	034	0300	53	136	631296	1

SCALE: NOTED
SHEET 1 OF 1

Date: 11/03/05 - 9:24 AM Layout Names: STAND
Title: II:\Dwg\Contrctrs\DWG\Dwg\Idaho-125963
ID: RDH5
File: 631296-1.dwg
Path: K:\TAN WAG-1 V-Tank

Attachment 1a

TAN V-Tanks Design Modification Drawings

The following drawings were attached to the printed document, and are available on EDMS[o].

DWG-628468, REV. 5	DWG-628153, REV. 6*
DWG-632027, REV. 0	DWG-632045, REV. 0
DWG-634999, REV. 0	DWG-635000, REV. 0
DWG-632029, REV. 0*	DWG-632030, REV. 0*
DWG-632031, REV. 0*	DWG-634826, REV. 0
DWG-634827, REV. 0	

o. Selected drawings (*) are not available on EDMS at time of printing in order to maintain system design configuration control during system modifications.

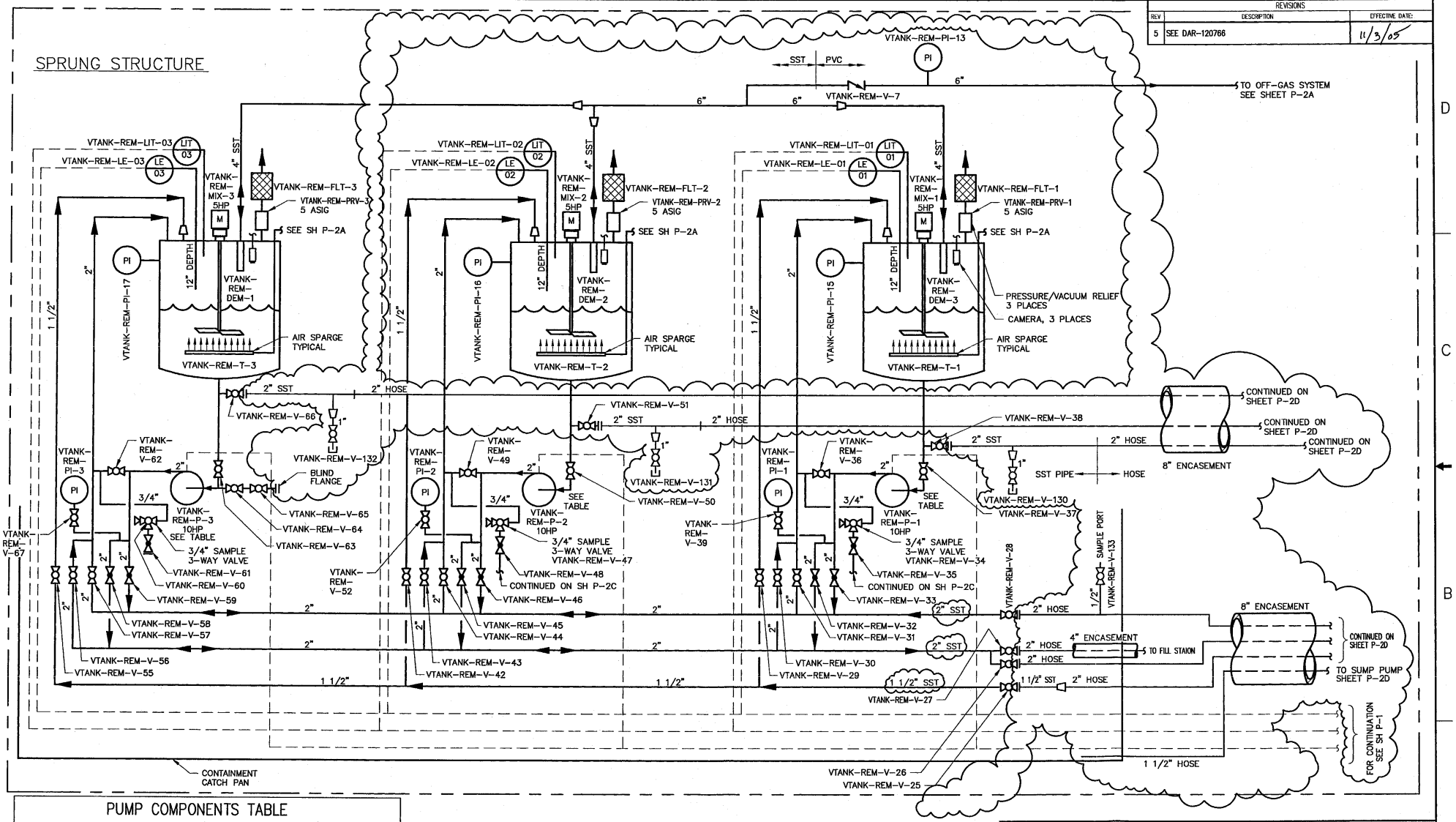

PUMP COMPONENTS TABLE

COMPONENT	VTANK-REM-P-1	VTANK-REM-P-2	VTANK-REM-P-3
AIR RECEIVER	VTANK-REM-VES-1	VTANK-REM-VES-2	VTANK-REM-VES-3
RECEIVER PI	VTANK-REM-PI-1A	VTANK-REM-PI-2A	VTANK-REM-PI-3A
INLET VALVE	VTANK-REM-V-1A	VTANK-REM-V-2A	VTANK-REM-V-3A
OUTLET VALVE	VTANK-REM-V-1B	VTANK-REM-V-2B	VTANK-REM-V-3B

NOTES

1. FOR NOTES SEE SHEET P-1.
2. OFF-GAS SYSTEM WILL PROVIDE HEPA FILTRATION AND GRANULATED ACTIVATED CARBON FILTRATION IN ADDITION TO CONDITIONING THE GAS STREAM.

PROFESSIONAL ENGINEER REGISTERED 4307 11/3/05 STATE OF IDAHO RANDY EASTMAN

REV	DESCRIPTION	EFFECTIVE DATE
5	SEE DAR-120766	11/3/05

FOR DRAWING INDEX SEE DRAWING NO. 628443

NO SCALE

DESIGN PHASE: AFC

SAFETY CATEGORY: CG

SUBCONTRACT NO. N/A

REQUESTER: G. Mc DANNEL

DESIGN: M POPE

DRAWING: J MONCUR

PROJECT NO. 22901

SPCL CODE

FOR REVIEW/APPROVAL SIGNATURES SEE DAR NO. 113657

EFFECTIVE DATE: 7/15/04

INEEL (Idaho National Engineering & Environmental Laboratory) BECHTEL BWXT IDAHO, LLC

TAN

TSF-09/18 V-TANKS CONTENTS REMEDIATION

P&ID

SIZE D | CAGE CODE 01MF3 | INDEX CODE NUMBER AREA 034 TYPE 0200 SQ 24 DWG 090 | DWG-628468 | REV 5

SCALE: NONE | SHEET P-2

Date: 11/03/05 – 2:03 PM | Layout Name: Schematic | Tab: Title II Design\Controlled DWG | Tab: RDH5

Tab: 628468-5.dwg
Pltdir: A:\DWG-1 V-Tan

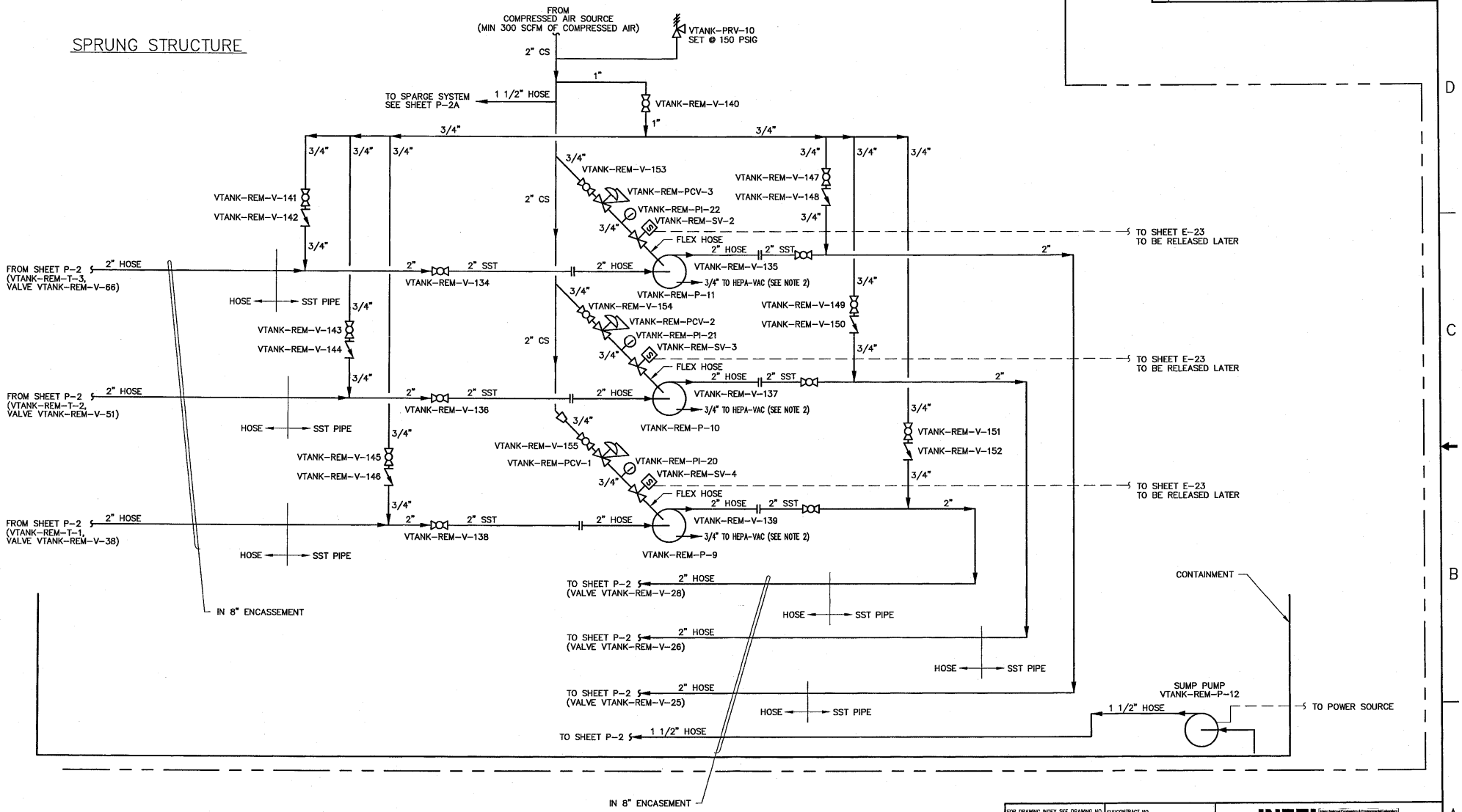

NOTES

1. FOR NOTES SEE SHEET P-1.
2. FIELD ROUTE LINES TO HEPA-VAC.

PROFESSIONAL ENGINEER REGISTERED 4307 11/3/05 STATE OF IDAHO RANDY EASTMAN

FOR DRAWING INDEX SEE DRAWING NO. 628443	SUBCONTRACT NO. N/A	INEEL Idaho National Engineering & Environmental Laboratory BECHTEL BWXT IDAHO, LLC
NO SCALE	REQUESTER: MARK BODILY DESIGN: RANDY EASTMAN DRAWN: ROB HERGESHEIMER PROJECT NO. 22901 SPCL CODE	TAN TSF-09/18 V-TANKS CONTENTS REMEDIATION P&ID
DESIGN PHASE: AFC SAFETY CATEGORY: CG	FOR REVIEW/APPROVAL SIGNATURES SEE DAR NO. 124883 EFFECTIVE DATE: 11/03/05	SIZE D · CAGE CODE 01MF3 · INDEX CODE NUMBER AREA 034 TYPE 0200 CL 24 ORIG 090 · DWG-632027 · REV SCALE: NONE · SHEET P-2D

File: 632027.dwg Path: K:\TAN WAG-1 V-... Date: 11/03/05 - 2:02 PM | Layout Name: Schematic (2) | Title II Design\Controlled DWG\hergy\eastman | ID: RDH5

REVISIONS		
REV	DESCRIPTION	EFFECTIVE DATE:

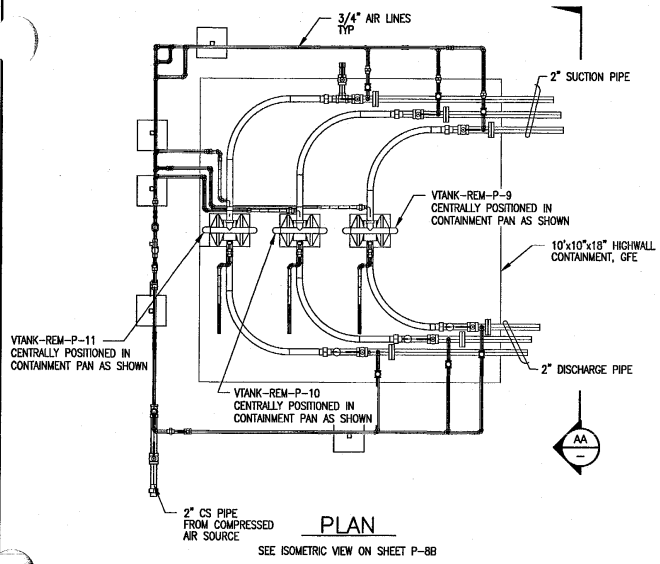

PLAN

SEE ISOMETRIC VIEW ON SHEET P-8B

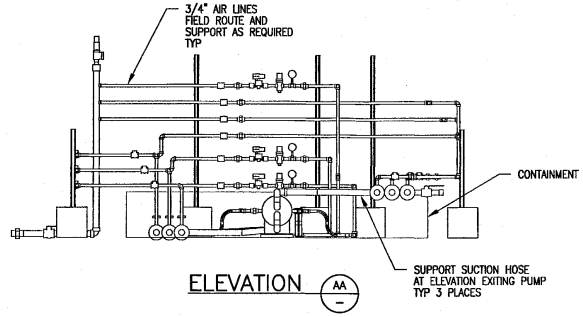

ELEVATION AA

LEGEND

Q = QUALITY INSPECTION

NOTES

1. FIELD ROUTE ALL PIPING AND HOSES.
2. PIPE BENDS MAY BE USED IN LIEU OF ELBOWS. IF UTILIZED, A MINIMUM BEND RADIUS OF 5X THE NOMINAL DIAMETER SHALL BE USED. ALL BENDS SHALL BE FREE FROM WRINKLES, KINKS, AND THIN OR FLAT SPOTS. OUT OF ROUNDNESS SHALL NOT EXCEED 8% BETWEEN THE MINIMUM AND MAXIMUM CROSS-SECTIONAL DIMENSIONS.
3. STAINLESS STEEL PIPE WELDING SHALL BE PERFORMED PER INL WPS S2.0 USING ER-308L WELD FILLER METAL PER AWS A5.9 FOR JOINING 304L STAINLESS STEEL PIPE AND STAINLESS FITTINGS.
4. CARBON STEEL PIPE WELDING SHALL BE PERFORMED PER INL WPS C2.0 USING ER-70S-X WELD FILLER METAL.
5. Q VISUAL WELD EXAMINATION: VISUALLY EXAMINE ALL WELDS IN ACCORDANCE WITH ASME B31.3, PARAGRAPHS 341.4.1 AND 344.2.
6. Q TESTING:
   STAINLESS STEEL PIPING: ALL STAINLESS STEEL PIPING SHALL BE HYDROSTATICALLY LEAK TESTED IN ACCORDANCE WITH ASME B31.3, PARAGRAPH 345.4. TEST PRESSURE SHALL BE 195 PSIG (+5 PSIG -5 PSIG) FOR THE HYDROSTATIC TEST. TEST MEDIUM SHALL BE PLANT WATER.

   CARBON STEEL PIPING: ALL CARBON STEEL COMPRESSED AIR PIPING SHALL BE INITIAL SERVICE LEAK TESTED IN ACCORDANCE WITH ASME B31.3, PARAGRAPH 345.7.
7. ALL PIPING IS ASME B31.3 CATAGORY D.
8. 3/4" AND 2" FLEX HOSE ASSEMBLIES (W/NPT END CONNECTIONS) RATED AT A MAXIMUM OPERATING PRESSURE OF FULL VACUUM TO 200 PSIG AT 70°F. HOSE END CONNECTIONS SHALL BE INSTALLED PER THE MANUFACTURER OF THE HOSE ASSEMBLY. FIELD ASSEMBLED HOSES SHALL COMPLY WITH ALL FLEXIBLE HOSE REQUIREMENTS. HOSE FITTINGS AND FITTING CONNECTION METHODS SHALL BE PRESSURE RATED TO AT LEAST THE HOSE PRESSURE RATING. HOSE ASSEMBLIES SHALL HAVE A MINIMUM BURST PRESSURE OF THREE (3) TIMES THE MAXIMUM OPERATING PRESSURE. HOSE ASSEMBLY LENGTHS ARE AS REQUIRED.

QTY REQD	PART OR IDENTIFYING NO.	NOMENCLATURE OR DESCRIPTION	MATERIAL/SPECIFICATION OR VENDOR NAME	NO.
1	85-100 SERIES	BALL VALVE, 2", FULL PORT, THREE PIECE, 150 PSIG, NPT END CONNECTIONS CS BODY, 316 SST BALL AND STEM SEATS ANS SEALS SHALL BE RPTFE OR VITON, LEVER HANDLE	APOLLO	31
1	85-100 SERIES	BALL VALVE, 1 1/2", FULL PORT, THREE PIECE, 150 PSIG, NPT END CONNECTIONS 304 SST BODY, 316 SST BALL AND STEM SEATS ANS SEALS SHALL BE RPTFE OR VITON, LEVER HANDLE	APOLLO	30
12		FLANGE, 2" 150LB RF THREADED	F304L SST ASTM A182	29
3	SEAL ASSEMBLY 50100SS04T	DIAPHRAGM SEAL ASSEMBLY, 1/2" FNPT PROCESS CONNECTION, W/3' BRAIDED TUBING AND 1/2" SST SNUBBER FILLED AND ASSEMBLED W/SILICONE OIL DC200	ASHCROFT	28
3	DURAGAUGE 451279RSL04L	PRESSURE GAUGE, 300 PSI GLYCERIN FILLED AND BONNET, INTEGRIL SEATS,	ASHCROFT	27
6		CHECK VALVE, 3/4", 150# CLASS NPT CONNECTIONS, SWING TYPE, BODY, BONNET AND DISC 316 SST, INTEGRIL SEATS,	ASTM A182, GRADE F316	26
3		PRESSURE GAUGE, W/1/4" NPT MALE BOTTOM CONNECTION, 2 1/2" DIA GAUGE, SST OR CHROME, 0-200 PSIG		25
6	SEE NOTE 8	FLEX HOSE, 2" W/NPT END CONNECTIONS	HOSE PLUS	24
6	SEE NOTE 8	FLEX HOSE, 3/4" W/NPT END CONNECTIONS	HOSE PLUS	23
6	85-100 SERIES	BALL VALVE, 2", FULL PORT, THREE PIECE 150 PSIG, NPT END CONNECTIONS 304 SST BODY, 316 SST BALL AND STEM SEATS ANS SEALS SHALL BE RPTFE OR VITON, LEVER HANDLE	APOLLO	22
3	4959K54	PRESSURE REGULATOR, 3/4", 0-150 PSIG W/PRESSURE GUAGE, NPT END CONNECTIONS MIN FLOW CAPACITY 100 SCFM @ 100 PSIG T-HANDLE, STEEL OR ALUMINUM BODY	MCMASTER-CARR	21
1	4712K35	PRESSURE RELIEF VALVE, 1 1/2" 125 PSIG, NPT END CONNECTIONS BRONZE OR STEEL BODY	MCMASTER-CARR	20
9	85-100 SERIES	BALL VALVE, 3/4", FULL PORT, THREE PIECE 150 PSIG, NPT END CONNECTIONS 304 SST BODY, 316 SST BALL AND STEM SEATS ANS SEALS SHALL BE RPTFE OR VITON, LEVER HANDLE	APOLLO	19

BILL OF MATERIAL

QTY REQD	PART OR IDENTIFYING NO.	NOMENCLATURE OR DESCRIPTION	MATERIAL/SPECIFICATION OR VENDOR NAME	ITEM NO.
3	8210G54	SOLENOID VALVE, TWO-WAY, NORMAL CLOSED 1" NPT CONNECTIONS PORTS, 150 PSIG MAX. DIFFERENTIAL PRESSURE, 120 VAC, CONTINUOS DUTY, WATER TIGHT BRASS OR ALUMINUM BODY	ASCO	18
AR	DRISCOPLEX 8700 PE 3408 HDPE, SDR 9.0	PIPE, 2" HIGH DENSITY POLYETHELINE	CHEVRON PHILLIPS	17
3		REDUCING TEE, 3/4"x1/4" SCRD, 150#	CS ASTM A197	16
6		REDUCING COUPLING, 1"x3/4" SCRD, 150#	CS ASTM A197	15
3		THREADOLET, 2"x1/2" SCRD, 150#	F304L SST ASTM A182	14
9		THREADOLET, 2"x3/4" SCRD, 150#	CS ASTM A105	13
1		REDUCING COUPLING, 2"x1 1/2" SCRD, 150#	CS ASTM A197	12
6		THREADOLET, 2"x3/4" SCRD, 3000#	F304L SST ASTM A182	11
6		UNION, 2" SCRD, 3000#	F304 SST ASTM A182	10
1		ELBOW, 90° 2" SCRD, 150#	CS ASTM A197	9
AR		PIPE, 2" SCHED 80	T304L SST ASTM A312	8
AR		PIPE, 2" SCHED 40	CS, BLACK ASTM A53	7
3		COUPLING, 3/4" SCRD, 3000#	CS ASTM A105	6
21		UNION, 3/4" SCRD, 3000#	CS ASTM A105	5
6		ELBOW, 90° 3/4" SCRD, 3000#	F304L SST ASTM A182	4
AR		ELBOW, 90° 3/4" SCRD, 150#	CS ASTM A197	3
AR		PIPE, 3/4" SCHED 80	T304L SST ASTM A312	2
AR		PIPE, 3/4" SCHED 80	CS, BLACK ASTM A53	1

BILL OF MATERIAL

PROFESSIONAL ENGINEER STATE OF IDAHO 4307 12/21/05 RANDY EASTMAN

FOR DRAWING INDEX SEE DRAWING NO.	628443
SCALE: 1/2" = 1'-0"	
DESIGN PHASE:	AFC
SAFETY CATEGORY:	CG
SUBCONTRACT NO.	N/A
REQUESTER:	MARK BODILY
DESIGN:	RANDY EASTMAN RE
DRAWN:	ROB HERGESHEIMER
PROJECT NO.	22901
SPCL CODE	
FOR REVIEW/APPROVAL SIGNATURES SEE DAR NO.	126240
EFFECTIVE DATE:	12/21/05

INEEL (Idaho National Engineering & Environmental Laboratory) BECHTEL BWXT IDAHO, LLC

TAN

TSF-09/18 V-TANKS CONTENTS REMEDIATION

PLAN, ELEVATION, AND BILL OF MATERIAL

SIZE	CAGE CODE	INDEX CODE NUMBER AREA	TYPE	CL	DRG	DWG-	REV
D	01MF3	034	0200	24	090	634999	

SCALE: 1/2"=1'-0" SHEET P-8A

File: 634999.dwg Path: ...\INL WG-1 V-Tanks
Date: 12/21/05 - 8:51 AM | Layout Name: Layout1 | ID: KBR
Title II Design\Controlled Dwgs\PEACE\OFF-GAS\DAK-126239

REVISIONS		
REV	DESCRIPTION	EFFECTIVE DATE:

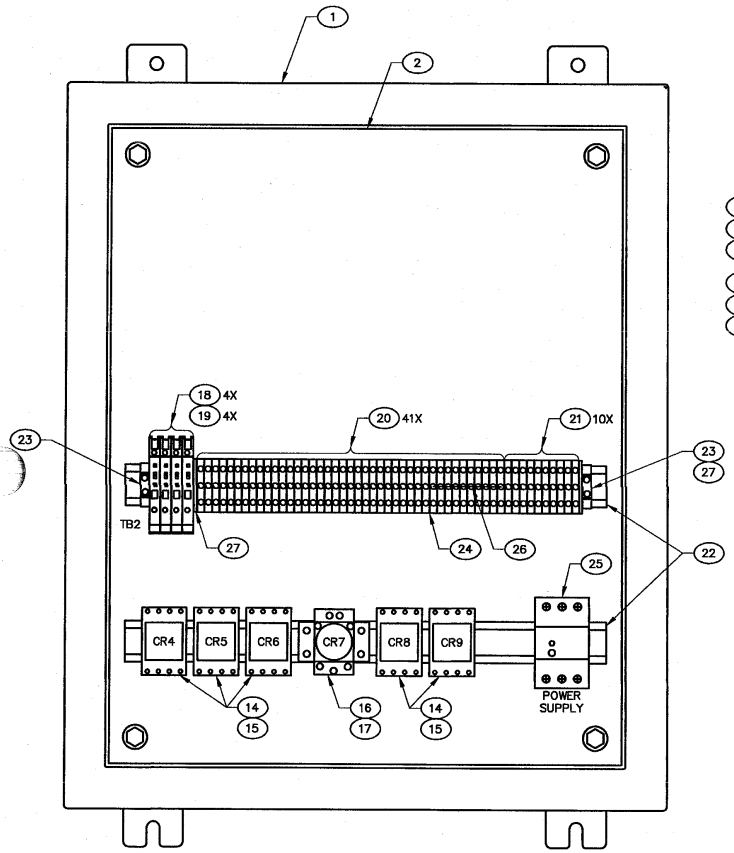

DOOR REMOVED FOR CLARITY

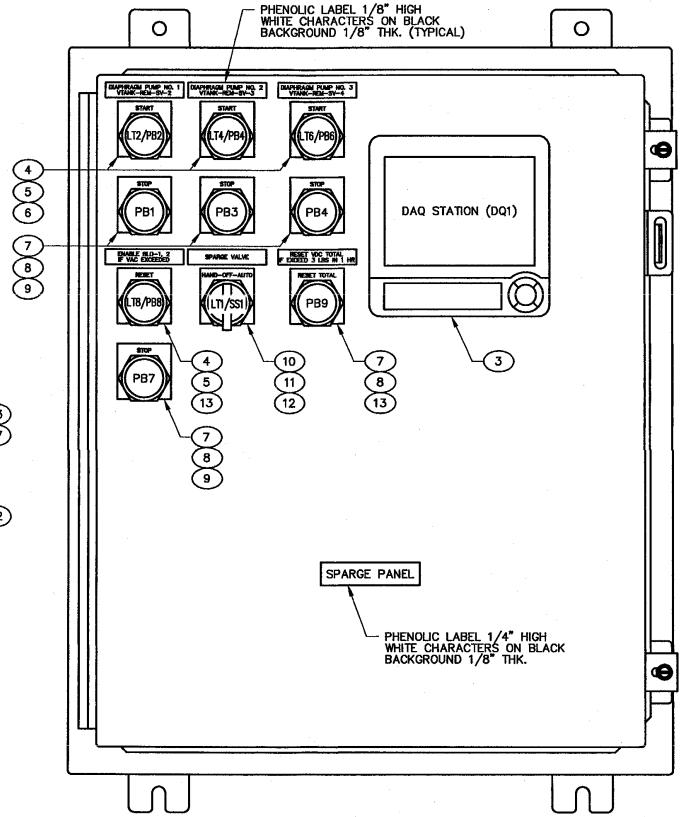

QTY REQD	SAFETY CAT.	PART OR IDENTIFYING NO.	NOMENCLATURE OR DESCRIPTION	MATERIAL/SPECIFICATION OR VENDOR NAME	ITEM NO.
2		1492-EB3	END BARRIER	ALLEN-BRADLEY	27
1		1492-CJ6-10	10-POLE JUMPER	ALLEN-BRADLEY	26
1		PSSR-B24	24 VDC POWER SUPPLY	ACROMAG	25
1		1492-PP3	PARTITION PLATE	ALLEN-BRADLEY	24
2		1492-EA35	END ANCHOR	ALLEN-BRADLEY	23
AR		199-DR1	DIN RAIL	ALLEN-BRADLEY	22
10		1492-WG4	GROUND TERMINAL BLOCK	ALLEN-BRADLEY	21
41		1492-W4	TERMINAL BLOCK	ALLEN-BRADLEY	20
4		AG2-2	FUSE 1X1 1/4" 2 AMP, 250 VAC	BUSSMAN	19
4		1492-H6	FUSE TERMINAL	ALLEN-BRADLEY	18
1		TYPE NR61	RELAY SOCKET, CLASS 8501	SQUARE D	17
1		TYPE KP13P14V60	3PDT RELAY, CLASS 8501 (120 VAC)	SQUARE D	16
5		TYPE NR51	RELAY SOCKET, CLASS 8501	SQUARE D	15
5		TYPE KP12P14V60	2PDT RELAY, CLASS 8506 (120 VAC)	SQUARE D	14
2		TYPE KN223	LEGEND PLATE, CLASS 9001 (RESET)	SQUARE D	13
1		TYPE KN260	LEGEND PLATE, CLASS 9001 (HAND-OFF-AUTO)	SQUARE D	12
1		TYPE KA1	CONTACT BLOCK, CLASS 9001	SQUARE D	11
1		TYPE K43JG8	3-POSTION, ILLUMINATED OPERATOR	SQUARE D	10
4		TYPE KN202	LEGEND PLATE, CLASS 9001 (STOP)	SQUARE D	9
4		TYPE KA3	CONTACT BLOCK, CLASS 9001	SQUARE D	8
4		TYPE K1RB	NON-ILLUMINATED PUSHBUTTON, CLASS 9001	SQUARE D	7
3		TYPE KN201	LEGEND PLATE, CLASS 9001 (START)	SQUARE D	6
3		TYPE KA2	CONTACT BLOCK, CLASS 9001	SQUARE D	5
3		TYPE K11L1G	ILLUNIMATED PUSHBUTTON, CLASS 9001	SQUARE D	4
1		DX106-3-2/A3/H2/W1	DAQSTATION	YOKOGAWA	3
1		A-24P20	BACK PANEL	HOFFMAN	2
1		A-242012LP	24"X20"X12" NEMA ENCLOSURE	HOFFMAN	1

PANEL LAYOUT

REGISTERED PROFESSIONAL ENGINEER 2800 12-21-05 STATE OF IDAHO Paul J. Bunnell

FOR DRAWING INDEX SEE DRAWING NO. 628443	SUBCONTRACT NO. N/A	INEEL (Idaho National Engineering & Environmental Laboratory) BECHTEL BWXT IDAHO, LLC
NO SCALE	REQUESTER: M. BODILY DESIGN: P. BUNNELL DRAWN: R. PENCE PROJECT NO. 22901 SPCL CODE	TAN TSF-09/18 V-TANKS REMEDIATION SPARGE PANEL LAYOUT
DESIGN PHASE: AFC SAFETY CATEGORY: CG	FOR REVIEW/APPROVAL SIGNATURES SEE DAR NO. 126240 EFFECTIVE DATE: 12/21/05	SIZE D · CAGE CODE 01MF3 · INDEX CODE NUMBERS AREA 034 TYPE 0400 CL 10 ORIG 090 · DWG-632029 · REV SCALE: NONE · SHEET E-22A

REVISIONS		
REV	DESCRIPTION	EFFECTIVE DATE:

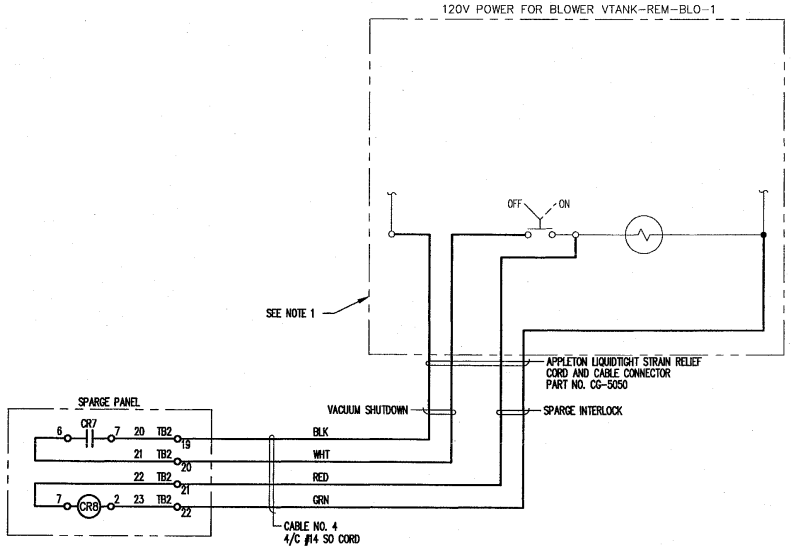

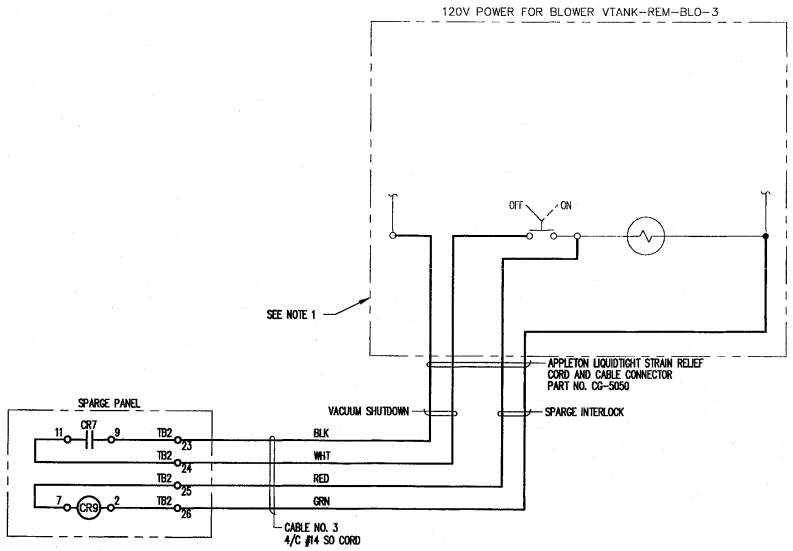

NOTE

1. EXISTING TERMINAL WIRE CONNECTIONS OF THE BLOWER CONTROL PANELS ARE SHOWN IN SIMPLIFIED DETAIL. TERMINATION POINTS FOR CABLES 3 AND 4 SHALL BE FIELD DETERMINED.

REGISTERED PROFESSIONAL ENGINEER 2990 12-21-05 State of Idaho Paul J. Bunnell

FOR DRAWING INDEX SEE DRAWING NO. 628443	SUBCONTRACT NO. N/A	INEEL Idaho National Engineering & Environmental Laboratory BECHTEL BWXT IDAHO, LLC
NO SCALE	REQUESTER: M. BODILY DESIGN: P. BUNNELL DRAWN: R. PENCE PROJECT NO. 22901 SPCL CODE	TAN TSF-09/18 V-TANKS REMEDIATION BLOWER SCHEMATIC DIAGRAMS
DESIGN PHASE: AFC	FOR REVIEW/APPROVAL SIGNATURES SEE DAR NO. 126240	SIZE D · CAGE CODE 01MF3 · INDEX CODE NUMBER AREA 034 TYPE 0400 CL 10 ORIG 090 · DWG-632031 · REV
SAFETY CATEGORY: CG	EFFECTIVE DATE: 12/21/05	SCALE: NONE · SHEET E-24

File: 632031.dwg Path: K:\TAN WAG-1 V-T... Date: 11/16/05 - 7:17 AM Layout Name: Layout2 ID: PENCRT

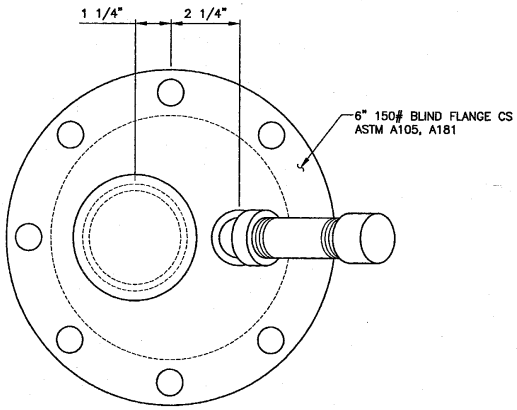

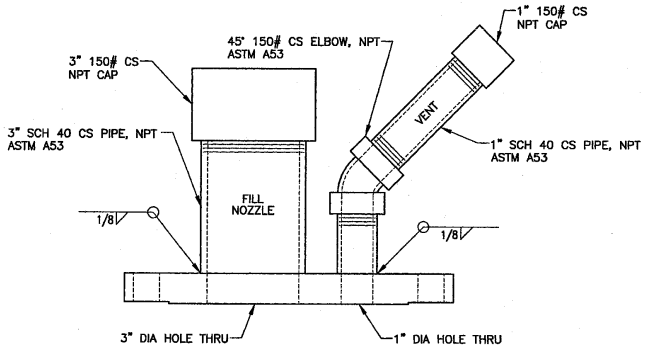

DETAIL 3
SCALE: 6"=1'-0"

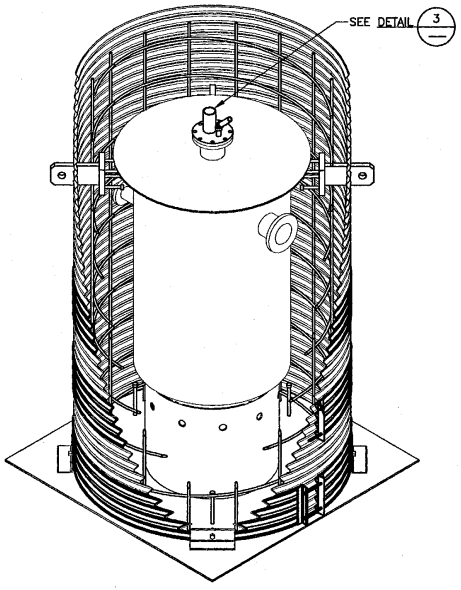

ISOMETRIC VIEW
NTS

SEQUENCE OF WORK

NOTE: CIRCLED ITEM NUMBERS BELOW ARE THE RESPONSIBILITY OF THE SUBCONTRACTOR. OTHER ITEMS SHALL BE ACCOMPLISHED BY THE CONTRACTOR. SUBCONTRACTOR SHALL COORDINATE ALL WORK PER SPEC 01005.

1. PIPE CULVERT ASSEMBLY AS SHOWN ON DWG 634826 IS TO BE COMPLETELY SHOP FABRICATED AND SHIPPED TO THE SITE AS A SINGLE UNIT.
2. OFFLOAD PIPE CULVERT ASSEMBLY WITH FORKLIFT.
3. PLACE ON LEVEL GROUND. AREA SELECTED SHOULD BE UNDISTURBED GRANULAR SOIL OR AT LEAST 12" DEEP MINIMUM PIT RUN GRAVEL COMPACTED TO 90% MAXIMUM DENSITY.
4. ENSURE PIPE CULVERT ASSEMBLY IS PLUMB TO WITHIN 1".
5. INSTALL FABRICATED FLANGE WITH FILL NOZZLE AND VENT, AS SHOWN IN DETAIL-3 ON THIS DRAWING, ON TOP OF V-9 TANK. BOLT AND GASKET PER SPEC 05100. TIGHTEN BOLTS SNUG TIGHT.
6. LIFT V-9 TANK AS SHOWN ON THE LIFT PLAN AND MOVE TO WITHIN A FEW FEET OF THE PIPE CULVERT ASSEMBLY OPENING IN PREPARATION FOR FINAL PLACEMENT. ORIENTATION OF THE TANK MUST BE SUCH THAT THERE WILL BE MINIMAL DELAY WHEN MOVING AND LOWERING THE TANK DURING FINAL V-9 TANK PLACEMENT. IN ADDITION, ORIENTATION OF THE TANK MUST BE SUCH THAT TANK NOZZLES WILL CLEAR INTERNAL REBAR AND LIFTING LUGS. MAINTAIN THE LOAD IN SUSPENSION.
7. ENSURE ANY OTHER PREPARATIONS ARE MADE TO TANK OR PIPE CULVERT ASSEMBLY AS NEEDED PRIOR TO PLACEMENT OF V-9 TANK INTO PIPE CULVERT ASSEMBLY.
8. FILL BOTTOM SUPPORT RING WITH CONTROLLED LOW STRENGTH MATERIAL (CLSM) PER SPEC 03601 UP TO LEVEL OF HOLES NEAR TOP PERIMETER (ABOUT 3/4 FULL).
9. IMMEDIATELY AFTER PLACING CLSM, LOWER V-9 TANK INTO PIPE CULVERT AND PLACE INTO BOTTOM SUPPORT RING UNTIL THE TANK SETTLES INTO PLACE AND RESTS ALL AROUND ON THE RING. TOP SURFACE OF TANK WILL BE APPROXIMATELY 1'-9" BELOW TOP EDGE OF PIPE CULVERT. MAINTAIN RIGGING IN PLACE AROUND TOP OF THE TANK. AFTER ENSURING THAT V-9 TANK WILL REMAIN PLUMB WITHIN 2" WHEN RESTING ON THE BOTTOM SUPPORT RING, REAPPLY SLIGHT TENSION ON RIGGING.
10. USING 3" FILL NOZZLE, FILL INTERIOR OF THE V-9 TANK WITH CLSM PER SPEC 03601. ALLOW 2 (TWO) DAY MINIMUM CURING TIME BEFORE PROCEEDING WITH NEXT STEP.
11. ALLOW V-9 TANK TO REST COMPLETELY ON BOTTOM SUPPORT RING AND THEN REMOVE RIGGING FROM TOP OF TANK.
12. POUR A UNIFORM 6 (SIX) INCH DEEP MAXIMUM LIFT OF CONCRETE PER SPEC 03300 IN THE BOTTOM OF THE PIPE CULVERT ASSEMBLY. ALLOW 2 (TWO) DAYS MINIMUM CURING TIME BEFORE PROCEEDING WITH NEXT STEP.
13. FILL THE BALANCE OF THE INTERIOR OF THE PIPE CULVERT ASSEMBLY WITH CONCRETE PER THE SPECIFICATION. CONFORM TO THE SPECIFICATION FOR LIFT DEPTHS AND PLACEMENT METHODS. ENSURE CONCRETE IS PLACED THOROUGHLY AROUND REINFORCEMENT STEEL, LIFTING LUGS, NOZZLES, FLANGES, AND OTHER EMBEDDED ITEMS. AVOID COLD JOINTS.
14. ALLOW 28-DAY MINIMUM CURE TIME PRIOR TO LIFTING.
15. OBTAIN RESULTS FROM 28-DAY TESTING OF CONCRETE TEST CYLINDERS AND PROVIDE THESE RESULTS TO ENGINEERING.
16. UPON APPROVAL OF CONCRETE STRENGTH BASED ON TEST RESULTS RIG AND HOIST ENTIRE ASSEMBLY AS SHOWN ON LIFT PLAN AND PLACE ON TRANSPORT VEHICLE.
17. TIE DOWN ENTIRE ASSEMBLY USING LIFTING LUGS AS SHOWN ON TRANSPORT PLAN 1571.
18. TRANSPORT TO ICDF.
19. RIG AND HOIST ENTIRE ASSEMBLY AS SHOWN ON LIFT PLAN AND PLACE AS DIRECTED IN THE LANDFILL.

REV	DATE	DESCRIPTION

REVISION HISTORY

PROFESSIONAL ENGINEER REGISTERED 17574 STATE OF IDAHO DAVID L. STEPHENS 11/18/05

SCALE: 6" = 1'-0"

DESIGN PHASE:	AFC
SAFETY CATEGORY:	CG
HORIZONTAL SCALE	NOTED
VERTICAL SCALE	N/A
FOR DRAWING INDEX SEE DRAWING NO.	N/A

INITIALS AND DATE FOR CURRENT RELEASE ONLY

	INITIALS	DATE
DESIGN: D.L. STEPHENS	DLS	11/18/05
DRAFTER:	KJK	11-18-05
DRAFTING CHECK: G.K. MACE	GKM	11/18/05
TECHNICAL CHECK: N.K. ROGERS	NKR	11/18/05
ENG GROUP SUPERVISOR: K.D. FRITZ	KDF	11/18/05
DESIGN PROJECT ENG: M.E. BOOILY	MEB	11/18/05

CH2MHILL

Idaho Cleanup Project

TAN

V-9 TANK MACROENCAPSULATION

FILL NOZZLE DETAIL AND SEQUENCE OF WORK

PROJECT NO. 22901

SPCL CODE:

EFFECTIVE DATE: 11/18/05

INDEX CODE NUMBER			
AREA	TYPE	CL	ORIG
034	9999	60	136

SIZE D DWG- 634827 REV

DAR NO. 126340 SHEET 1 OF 1

FMT-DV-REV 2
ID: KJ1
Date: 11/18/05 - 10:00 AM Layout Name: 634827
I:\Title II Design\Controlled DWG\Fall-2005
File: 634827.dwg
Path: K:\TAN WAG-1 V-Tgr

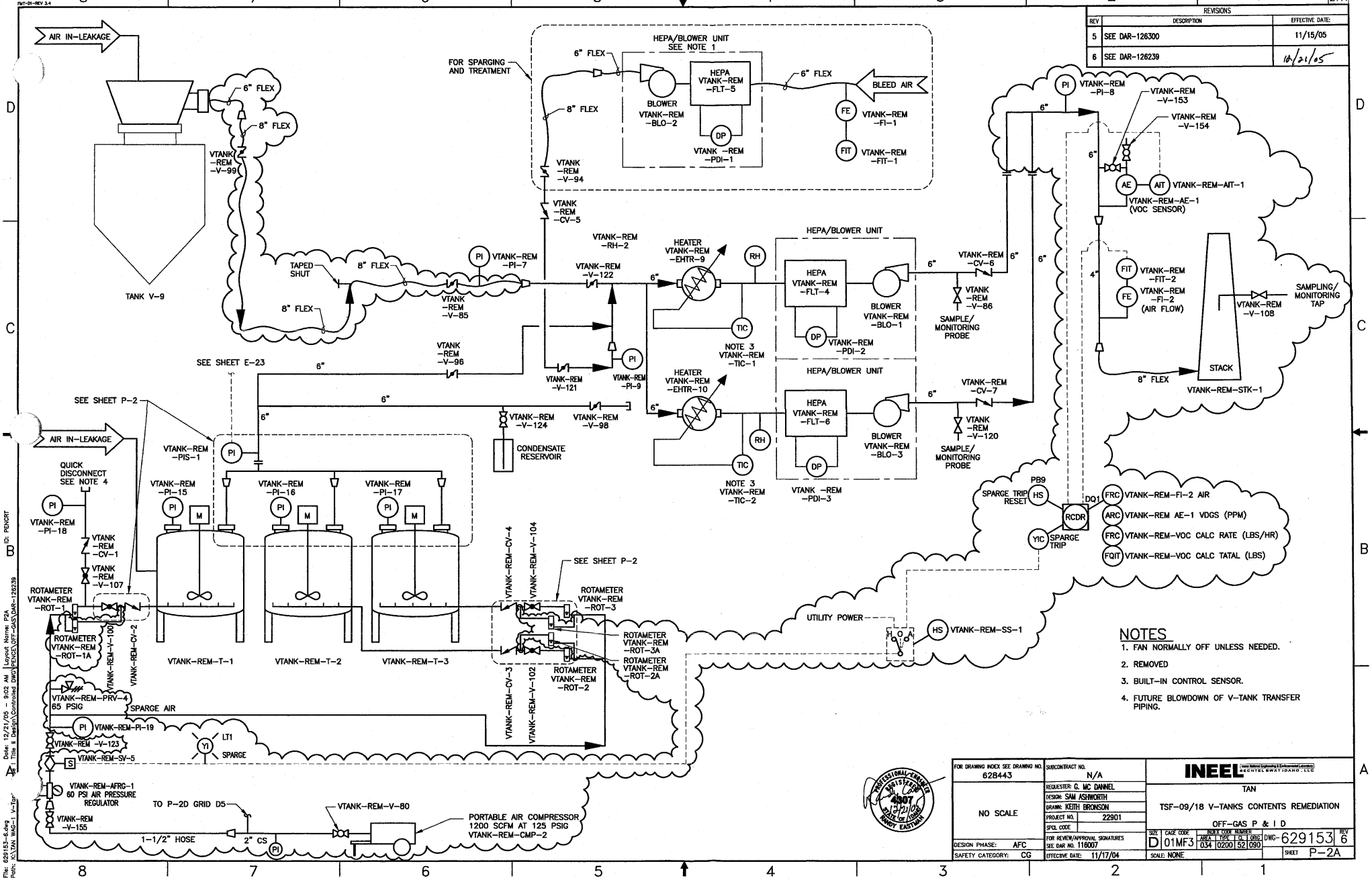
27A
REVISIONS
REV | DESCRIPTION | EFFECTIVE DATE:
5 | SEE DAR-126300 | 11/15/05
6 | SEE DAR-126239 | 10/21/05
AIR IN-LEAKAGE
6" FLEX
8" FLEX
VTANK-REM-V-99
TANK V-9
TAPED SHUT
8" FLEX
8" FLEX
VTANK-REM-V-85
PI VTANK-REM-PI-7
FOR SPARGING AND TREATMENT
HEPA/BLOWER UNIT SEE NOTE 1
6" FLEX
8" FLEX
BLOWER VTANK-REM-BLO-2
HEPA VTANK-REM-FLT-5
DP VTANK-REM-PDI-1
6" FLEX
BLEED AIR
FE VTANK-REM-FI-1
FIT VTANK-REM-FIT-1
VTANK-REM-V-94
VTANK-REM-CV-5
VTANK-REM-RH-2
VTANK-REM-V-122
HEATER VTANK-REM-EHTR-9
RH
TIC
NOTE 3 VTANK-REM-TIC-1
HEPA/BLOWER UNIT
HEPA VTANK-REM-FLT-4
DP VTANK-REM-PDI-2
BLOWER VTANK-REM-BLO-1
VTANK-REM-CV-6
VTANK-REM-V-86
SAMPLE/MONITORING PROBE
VTANK-REM-V-121
PI VTANK-REM-PI-9
HEATER VTANK-REM-EHTR-10
HEPA/BLOWER UNIT
HEPA VTANK-REM-FLT-6
DP VTANK-REM-PDI-3
BLOWER VTANK-REM-BLO-3
VTANK-REM-CV-7
VTANK-REM-V-120
SAMPLE/MONITORING PROBE
NOTE 3 VTANK-REM-TIC-2
VTANK-REM-V-96
SEE SHEET E-23
SEE SHEET P-2
VTANK-REM-V-124
VTANK-REM-V-98
CONDENSATE RESERVOIR
AIR IN-LEAKAGE
VTANK-REM-PIS-1
QUICK DISCONNECT SEE NOTE 4
PI VTANK-REM-PI-18
VTANK-REM-CV-1
VTANK-REM-V-107
VTANK-REM-PI-15
VTANK-REM-PI-16
VTANK-REM-PI-17
M
ROTAMETER VTANK-REM-ROT-1
ROTAMETER VTANK-REM-ROT-1A
VTANK-REM-V-100
VTANK-REM-CV-2
VTANK-REM-T-1
VTANK-REM-T-2
VTANK-REM-T-3
VTANK-REM-CV-4
VTANK-REM-V-104
SEE SHEET P-2
ROTAMETER VTANK-REM-ROT-3
ROTAMETER VTANK-REM-ROT-3A
ROTAMETER VTANK-REM-ROT-2A
ROTAMETER VTANK-REM-ROT-2
VTANK-REM-CV-3
VTANK-REM-V-102
VTANK-REM-PRV-4 65 PSIG
SPARGE AIR
PI VTANK-REM-PI-19
VTANK-REM-V-123
VTANK-REM-SV-5
S
YI LT1 SPARGE
VTANK-REM-AFRG-1 60 PSI AIR PRESSURE REGULATOR
VTANK-REM-V-155
TO P-2D GRID D5
1-1/2" HOSE
2" CS
PI
VTANK-REM-V-80
PORTABLE AIR COMPRESSOR 1200 SCFM AT 125 PSIG VTANK-REM-CMP-2
UTILITY POWER
HS VTANK-REM-SS-1
PI VTANK-REM-PI-8
VTANK-REM-V-153
VTANK-REM-V-154
AE AIT VTANK-REM-AIT-1
VTANK-REM-AE-1 (VOC SENSOR)
FIT VTANK-REM-FIT-2
FE VTANK-REM-FI-2 (AIR FLOW)
VTANK-REM-V-108
SAMPLING/MONITORING TAP
STACK
8" FLEX
VTANK-REM-STK-1
PB9
SPARGE TRIP RESET HS
DQ1
RCDR
YIC SPARGE TRIP
FRC VTANK-REM-FI-2 AIR
ARC VTANK-REM AE-1 VDGS (PPM)
FRC VTANK-REM-VOC CALC RATE (LBS/HR)
FQIT VTANK-REM-VOC CALC TATAL (LBS)
NOTES
1. FAN NORMALLY OFF UNLESS NEEDED.
2. REMOVED
3. BUILT-IN CONTROL SENSOR.
4. FUTURE BLOWDOWN OF V-TANK TRANSFER PIPING.
PROFESSIONAL ENGINEER REGISTERED 4307 STATE OF IDAHO RANDY EASTMAN 12/21/05
FOR DRAWING INDEX SEE DRAWING NO. 628443
NO SCALE
DESIGN PHASE: AFC
SAFETY CATEGORY: CG
SUBCONTRACT NO. N/A
REQUESTER: G. MC DANNEL
DESIGN: SAM ASHWORTH
DRAWN: KEITH BRONSON
PROJECT NO. 22901
SPCL CODE
FOR REVIEW/APPROVAL SIGNATURES SEE DAR NO. 116007
EFFECTIVE DATE: 11/17/04
INEEL
TAN
TSF-09/18 V-TANKS CONTENTS REMEDIATION
OFF-GAS P & I D
SIZE D
CAGE CODE 01MF3
INDEX CODE NUMBER AREA 034 TYPE 0200 CL 52 ORG 090
DWG- 629153
REV 6
SCALE: NONE
SHEET P-2A
File: 629153-6.dwg
Path: K:\TAN WAG-1 V-Tan
Date: 12/21/05 - 9:02 AM
Layout Name: P2A
Title II Design\Controlled DWG\PENCE\OFF-GAS\DAR-126239
ID: PENCRT

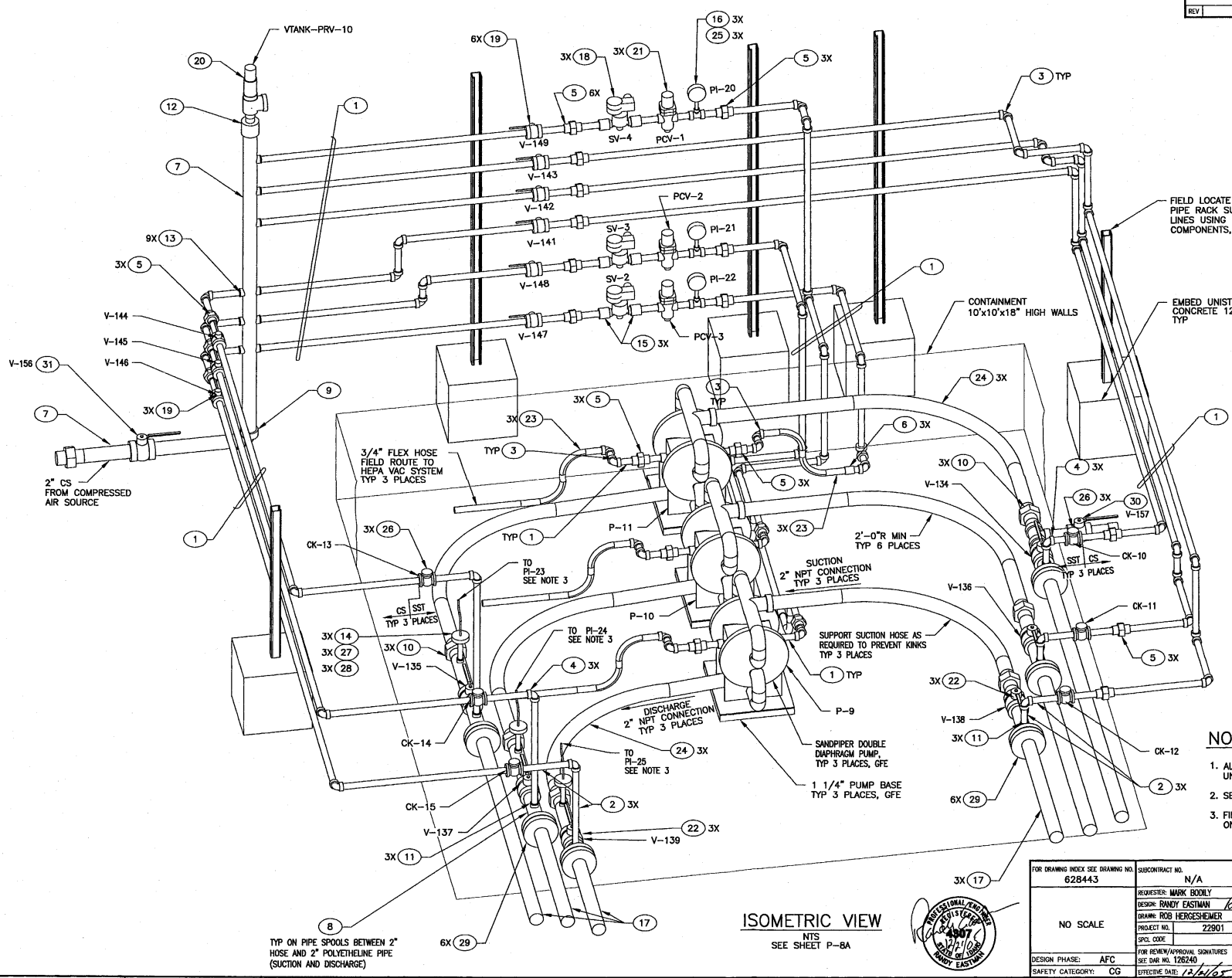

LEGEND

ITEM NUMBER

3X, 4X, ETC INDICATES NUMBER OF PLACES

NOTES

1. ALL LABELS SHALL HAVE A PREFIX OF "VTANK-REM-" UNLESS OTHERWISE INDICATED.
2. SEE SHEET P-8A FOR BILL OF MATERIAL.
3. FIELD ROUTE BRAIDED TUBING AND FIELD LOCATE GAUGE ON PIPE SUPPORT.

ISOMETRIC VIEW

NTS

SEE SHEET P-8A

FOR DRAWING INDEX SEE DRAWING NO. 628443	SUBCONTRACT NO. N/A	INEEL
NO SCALE	REQUESTER: MARK BODILY	TAN
	DESIGN: RANDY EASTMAN	TSF-09/18 V-TANKS CONTENTS REMEDIATION
	DRAWN: ROB HERGESHEIMER	ISOMETRIC VIEW
	PROJECT NO. 22901	
	SPCL CODE	
DESIGN PHASE: AFC	FOR REVIEW/APPROVAL SIGNATURES SEE DAR NO. 126240	SIZE D · CAGE CODE 01MF3 · INDEX CODE NUMBER AREA 034 TYPE 0200 CL 24 ORIG 090 · DWG- 635000 · REV
SAFETY CATEGORY: CG	EFFECTIVE DATE: 12/21/05	SCALE: NONE · SHEET P-8B

PROFESSIONAL ENGINEER REGISTERED 4307 STATE OF IDAHO RANDY EASTMAN

REVISIONS

REV	DESCRIPTION	EFFECTIVE DATE:

33B

FMT-01-REV 3.4

File: 635000.dwg Path: K:\TAN WAG-1 V-T... Date: 12/21/05 - 8:52 AM Layout Name: Layout1 (2) ID: KBR

REVISIONS		
REV	DESCRIPTION	EFFECTIVE DATE:

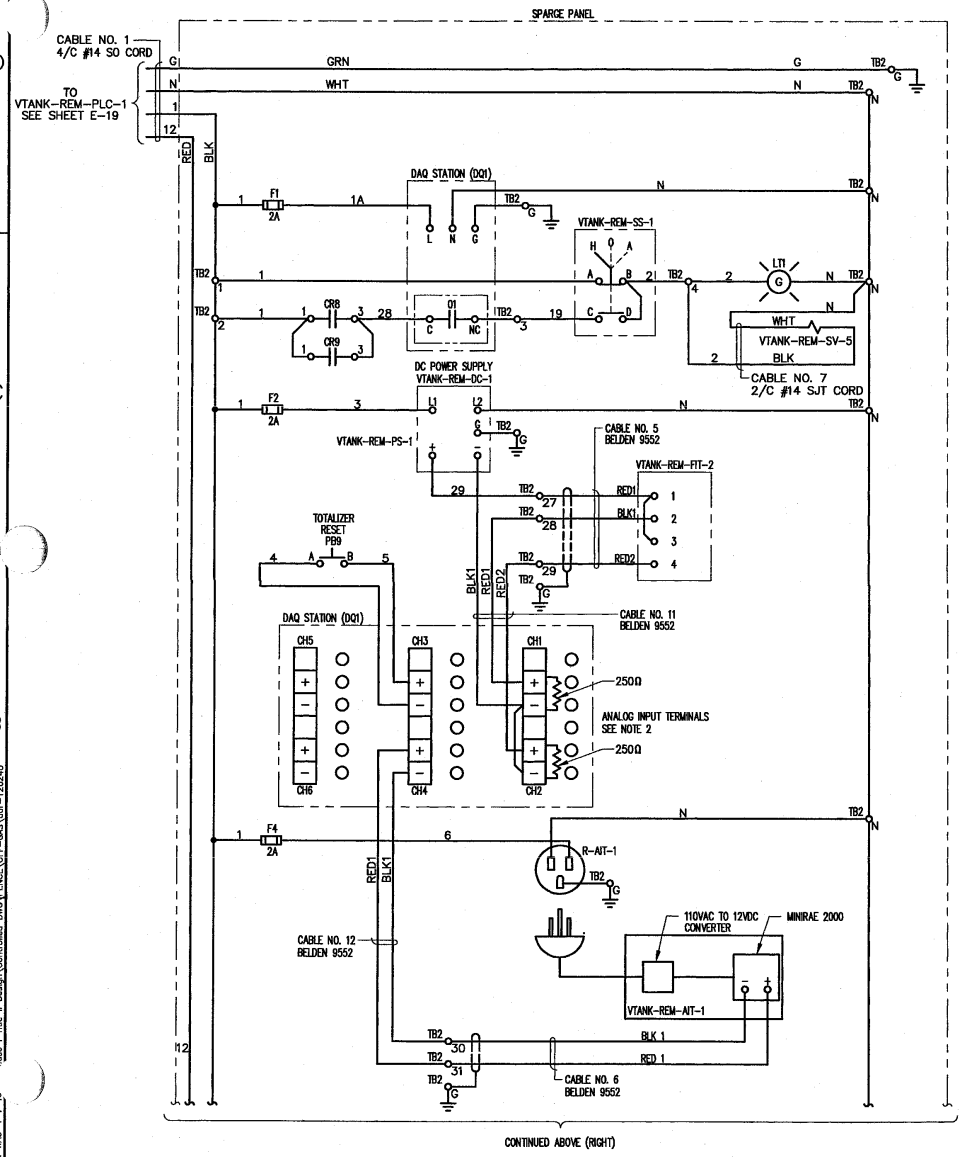

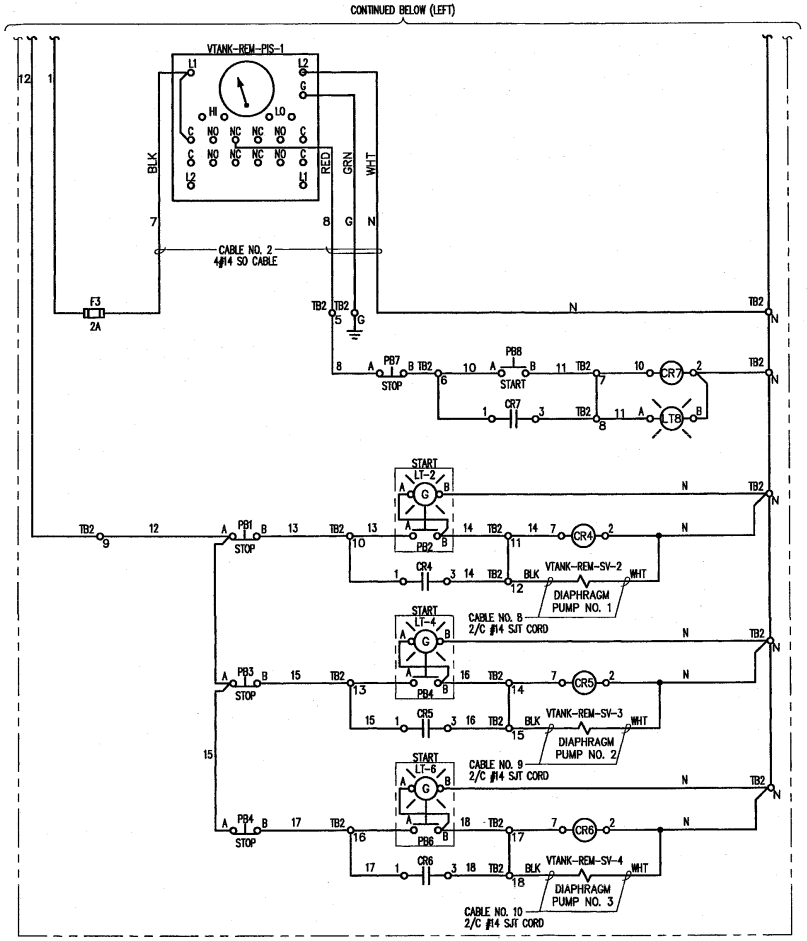

NOTE

1. ALL CONDUCTORS SHALL BE #14 THHN. UNLESS OTHERWISE NOTED.
2. FOR CHANNEL 1 AND 2, INSTALL 250 OHM RESISTORS BETWEEN + AND – TERMINALS.

REGISTERED PROFESSIONAL ENGINEER 12-21-05 State of Idaho Paul J. Bunnell

FOR DRAWING INDEX SEE DRAWING NO. 628443	SUBCONTRACT NO. N/A	INEEL (Idaho National Engineering & Environmental Laboratory) BECHTEL BWXT IDAHO, LLC
NO SCALE	REQUESTER: M. BODILY DESIGN: P. BUNNELL DRAWN: R. PENCE PROJECT NO. 22901 SPCL CODE	TAN TSF-09/18 V-TANKS REMEDIATION SPARGE PANEL SCHEMATIC DIAGRAM
DESIGN PHASE: AFC SAFETY CATEGORY: CG	FOR REVIEW/APPROVAL SIGNATURES SEE DAR NO. 126240 EFFECTIVE DATE: 12/21/05	SIZE D · CAGE CODE 01MF3 · INDEX CODE NUMBER AREA 034 TYPE 0400 SA 10 DRG 090 · DWG-632030 · REV SCALE: NONE · SHEET E-23

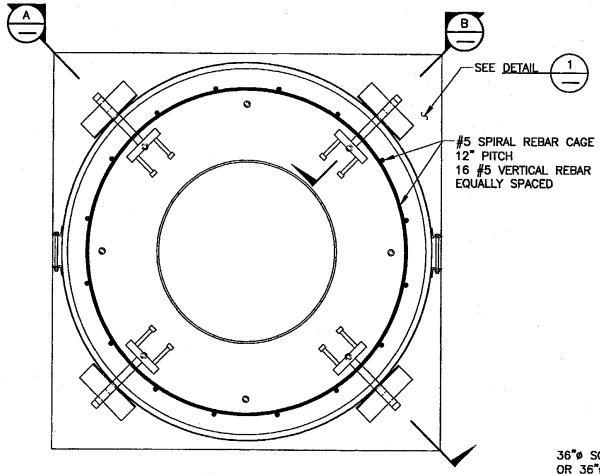

TANK V-9 GROUTING PLAN
SCALE: 1"=1'-0"

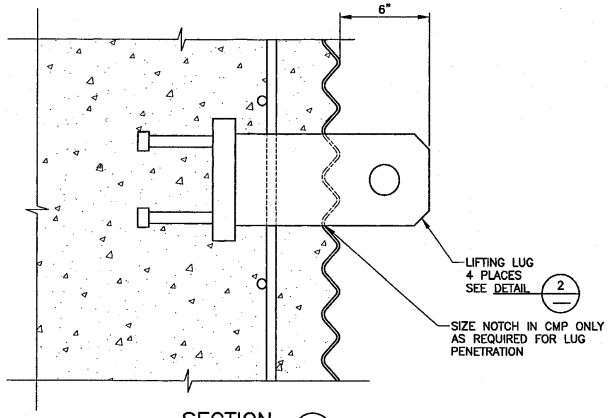

SECTION B
SCALE: 3"=1'-0"

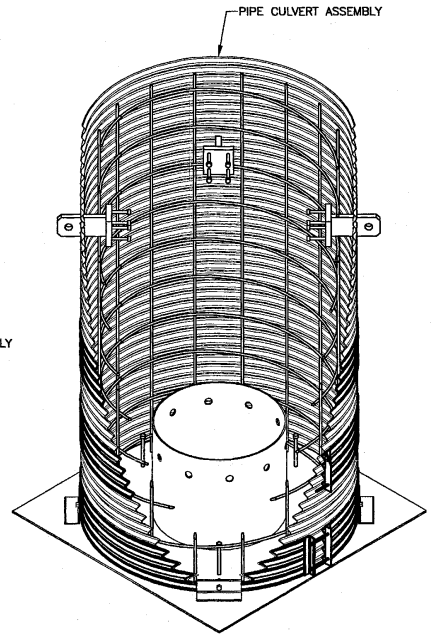

ISOMETRIC VIEW
NTS

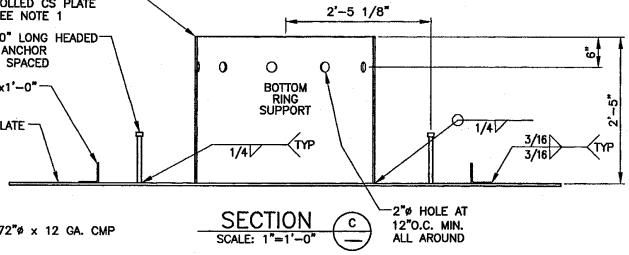

SECTION C
SCALE: 1"=1'-0"

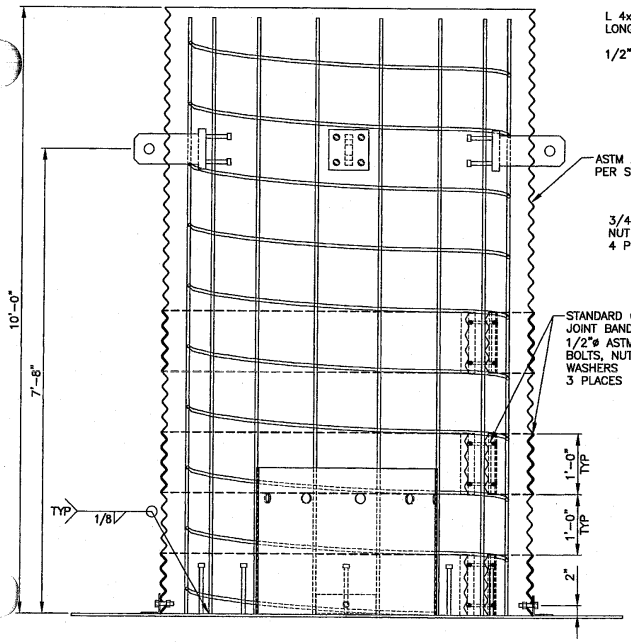

SECTION A
SCALE: 1"=1'-0"

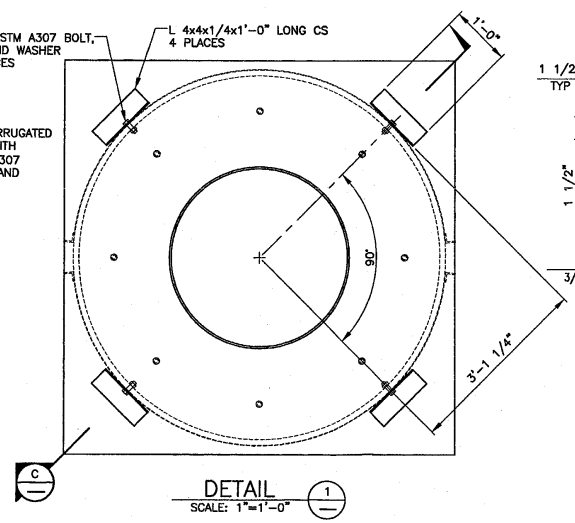

DETAIL 1
SCALE: 1"=1'-0"

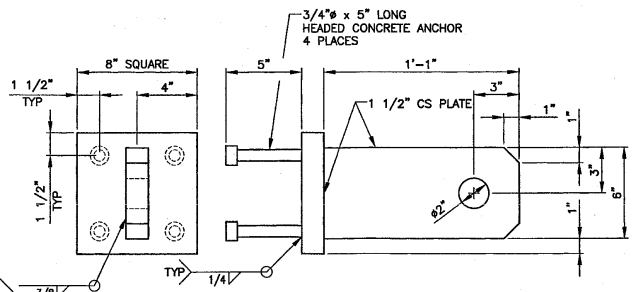

DETAIL 2
SCALE: 3"=1'-0"

NOTES

1. IF ROLLED PLATE IS USED, SEAM SHALL BE WELDED WITH A FULL PENETRATION GROOVE WELD FULL HEIGHT.

REV	DATE	DESCRIPTION

REVISION HISTORY

PROFESSIONAL ENGINEER REGISTERED 7874 11/18/05 STATE OF IDAHO DAVID L. STEPHENS

SCALE: 1" = 1'-0"
SCALE: 3" = 1'-0"

DESIGN PHASE:	AFC
SAFETY CATEGORY:	CG
HORIZONTAL SCALE	NOTED
VERTICAL SCALE	N/A
FOR DRAWING INDEX SEE DRAWING NO.	N/A

INITIALS AND DATE FOR CURRENT RELEASE ONLY

	INITIALS	DATE
DESIGN: D.L. STEPHENS	[illegible]	11/18/05
DRAFTER: [illegible]	KJK	11-18-05
DRAFTING CHECK: G.K. MACE	[illegible]	11/18/05
TECHNICAL CHECK: N.K. ROGERS	KDF for NKR	11/18/05
ENG GROUP SUPERVISOR: K.D. FRITZ	KDF	11/18/05
DESIGN PROJECT ENG: M.E. BODILY	[illegible]	11/18/05

Idaho Cleanup Project
CH2M+WG IDAHO, LLC

TAN
V-9 TANK MACROENCAPSULATION
PIPE CULVERT ASSEMBLY PLAN, SECTIONS AND DETAILS

PROJECT NO.	22901
SPCL CODE:	
EFFECTIVE DATE:	11/18/05

INDEX CODE NUMBER			
AREA	TYPE	Q.	ORIG
034	9999	60	136

SIZE D DWG- 634826 REV

DAR NO. 126340 SHEET 1 OF 1

File: 634826.dwg Path: K:\TAN WAG-1 V-Tan Date: 11/18/05 - 9:59 AM Layout Name: 634826 Title II Design\Controlled DWG\Fall-2005 ID: KJ1