3. COSTS

3.1 Operable Unit 5-12 Phase I Costs

Total project costs for the OU 5-12 Phase I activities are provided in Table 3-1. These costs include the INL management and operation contractor's project management, materials, and labor costs associated with remediation of the ARA-02, ARA-16, and ARA-25 sites and the closure of the ARA-07, ARA-08, ARA-13, and ARA-21 sanitary waste systems. An estimated $70,671 is yet to be spent for the treatment and disposal of the remaining Phase I waste streams.

Table 3-1. Phase I remedial design/remedial action costs.

Activity	Cost
Phase I remedial design	$740,796
Phase I fieldwork	$1,761,983
Waste Area Group 5 project support activities	$462,528
Waste Area Group 5 project management and administrative activities	$383,212
Waste management and disposal costs	$441,419
Remaining waste disposal costs (estimated)	$70,671
Phase I remedial design/remedial action total cost	$3,860,609

3.2 Operable Unit 5-12 Phase II Costs

Total project costs for the OU 5-12 Phase II activities are provided in Table 3-2. These costs include the INL management and operation contractor's project management, materials, and labor costs associated with remediation of the ARA-01, ARA-12, and ARA-23 sites. An estimated $91,000 will be spent to complete the remedial action and operations and maintenance reports. Long-term monitoring, maintenance of institutional controls, and all future reporting pertaining to WAG 5 will be performed under the purview of the INL Long-Term Stewardship organization.

3.3 Cost Comparison to the Record of Decision

Costs associated with implementation and performance of the OU 5-12 remedial action were significantly below the costs listed in the *Record of Decision Power Burst Facility and Auxiliary Reactor Area, Operable Unit 5-12* (DOE-ID 2000a). Table 3-3 provides a summary of the total ROD costs for the ARA-02, ARA-16, and contaminated soil sites versus the actual costs incurred. The WAG 5 and project construction management, remedial design, and remedial action costs were pulled directly from Tables 19, 24, and 30 for the contaminated soils, ARA-02, and ARA-16 remediation activities, respectively. For comparison, the Phase I WAG 5 and project construction management costs include the WAG 5 project support activities and the WAG 5 project management and administrative activities; the Phase II costs include these same activities plus the final report costs. The remedial design costs include the specified costs for both Phase I and Phase II plus the site boundary verification cost for Phase II. The remedial action costs for Phase I and Phase II include all other costs incurred.

Table 3-2. Phase II remedial design/remedial action costs.

Activity	Cost
Phase II remedial design	$178,628
Site boundary verification	$24,396
Waste Area Group 5 project support activities	$66,506
Waste Area Group 5 project management and administrative activities	$611,965
Phase II subcontract award	$24,701
Phase II fieldwork	$3,698,887
Phase II contaminated soils disposal[a]	$1,515,270
Phase II sampling and analysis	$41,388
Final report costs (including estimated costs to completion)	$91,000
Phase II remedial design/remedial action total cost	$6,252,741

a. The costs associated with disposal of the Phase II contaminated soils were incurred by the ICDF and were not directly accrued by the Waste Area Group 5 project.
ICDF = Idaho CERCLA Disposal Facility

Table 3-3. Remediation cost summary.

Activity	ROD Costs	Actual Costs
Waste Area Group 5 and project construction management	ARA-02—$455,000 ARA-16—$775,000 Soils—$1,080,000 Subtotal—$2,310,000	Phase I—$845,740 Phase II—$769,471 Subtotal—$1,615,211
Remedial design	ARA-02—$721,000 ARA-16—$910,000 Soils—$1,947,000 Subtotal—$3,578,000	Phase I—$740,796 Phase II—$203,024 Subtotal—$943,820
Remedial action	ARA-02—$493,000 ARA-16—$1,977,000 Soils—$8,440,000 Subtotal—$10,910,000	Phase I—$2,274,073 Phase II—$5,280,246 Subtotal—$7,554,319
Total costs	$16,798,000	$10,113,350

As can be seen from the summary, costs for all three major activities were less than those estimated in the *Record of Decision Power Burst Facility and Auxiliary Reactor Area, Operable Unit 5-12* (DOE-ID 2000a). For WAG 5 and project construction management, the actual costs were 69.9% of the estimated cost. For remedial design, the actual costs were 26.4% of the estimated cost with the Phase I costs being 45.4% of projected and Phase II being 10.4%. The primary contributor to Phase II costs being significantly less than estimated was the site characterization costs projected in the ROD required to support remedial design, which were $1,273,000. For comparison, the actual costs incurred for site boundary verification were $24,396, primarily attributed to the extensive use of in situ

instrumentation rather than more cost sampling and analysis using conventional laboratory methods. The Phase I remedial action costs were 92.1% of those estimated in the ROD, while the Phase II costs were 62.6%. The primary contributor to the Phase II costs being significantly less than projected is because the actual disposal costs were $1,515,270 as compared to the ROD estimate of $4,243,000. Overall total costs were 60.2% of the estimated costs provided in the ROD, not taking into account the 30% contingency allocated in the ROD.

4. MODIFICATIONS TO THE REMEDIAL ACTION WORK PLAN

Modifications to Revision 0 of the Phase I RD/RA Work Plan (DOE-ID 2000d) were provided in ongoing discussions with the Agencies during the spring of 2001 and documented in Revision 1 to the Phase I RD/RA Work Plan in June 2001 (DOE-ID 2001).

4.1 ARA-16 Radionuclide Tank

The primary change to the field activities involved remediation of the ARA-16 radionuclide tank. This change generated a third option for remediation of the site that placed the ARA-16 tank and contents in a low-risk state by doing the following:

- Tank contents were removed.
- The liquid was separated from the sludge, filtered to remove organic contaminants, and placed into approved containers. The sludge was dewatered to the extent practicable.
- The disposal facility's acceptance requirements for stabilized liquid were met. For stabilization, the liquid was solidified using a sodium polyacrylate monopolymer and was shipped to the SSA for eventual disposal in the ICDF.
- The dewatered sludge was temporarily stored in the CERCLA storage unit located at the ARA-I facility until appropriate treatment and disposal could be established. The sludge has subsequently been shipped to TAN for treatment and disposal with the waste from the V-Tanks in the treatment system currently being fabricated.
- The tank, ancillary piping, equipment, and debris were encapsulated in grout and shipped to the SSA for eventual disposal in the ICDF.

These changes were considered insignificant or minor. The stabilized liquid met LDRs as defined in the numeric treatment standards provided in "Applicability of Treatment Standards" (40 CFR 268.40) for F-listed waste. Encapsulation and disposal of piping and the tank at the ICDF were not considered changes from the selected remedy. Some decontamination of the piping had been performed and the tank was decontaminated to the extent practicable. Disposal of this waste at the INL rather than an off-Site disposal facility such as Envirocare of Utah was considered an insignificant or minor change, because the use of an on-Site versus off-Site disposal facility did not significantly alter the scope of the remedy nor did it alter the performance of the remedy.

The *Explanation of Significant Differences for the Record of Decision for the Power Burst Facility and Auxiliary Reactor Area Operable Unit 5-12* (DOE-ID 2005a) has been prepared and approved by the Agencies with the final version of the document released in January 2005. The Explanation of Significant Differences documents a significant difference in the remedy selected in the ROD (DOE-ID 2000a) for the treatment of the waste contained in the ARA-16 radionuclide tank. The remedy selected in the ROD for the ARA-16 tank waste was removal, ex situ thermal treatment, and disposal. The Explanation of Significant Differences alters the remedy for the ARA-16 tank waste to allow an alternative approach to treat the waste. Specifically, the waste will be included with the TAN V-Tanks waste for treatment in the system being developed for that much larger waste stream.

The alternative consists of combining the ARA-16 tank waste with the V-Tanks waste from OU 1-10 and treating the combined waste with air sparging at ambient or slightly elevated temperatures (up to and including boiling) to remove VOCs. If organic LDR treatment standards are not met at this point, the waste will be chemically oxidized/reduced to meet the applicable LDR standards. The treated

waste will be solidified/stabilized, as appropriate, and disposed of at the ICDF. A concurrent Explanation of Significant Differences was prepared for OU 1-10 describing and approving this treatment approach (including the addition of this waste stream) (DOE-ID 2004b). This remedy is further described in the *Remedial Design/Remedial Action, Phase II, for Waste Area Group 5* (DOE-ID 2003a) for the V-Tanks. Both the ARA-16 and the V-Tanks' remedial actions are being performed in accordance with the requirements in CERCLA (42 USC § 9601 et seq.) and the "National Oil and Hazardous Substances Pollution Contingency Plan" (40 CFR 300). The PCBs will be managed in accordance with EDF-3077, "Risk-Based Approach for Management of PCB Remediation Waste from the V-Tanks," which was approved as part of the *Explanation of Significant Differences for the Record of Decision for the Power Burst Facility and Auxiliary Reactor Area Operable Unit 5-12* (DOE-ID 2005a).

4.2 Waste Storage and Disposal

As previously stated, the stabilized liquid and encapsulated waste from the ARA-16 remediation were shipped to the SSA for eventual disposal in the ICDF. In addition, the dewatered sludge is currently in storage in the CERCLA storage unit located at the ARA-I facility. The final disposal of this waste will be documented in the Phase II Remedial Action Report, which will be provided to the Agencies once remediation of the WAG 5 soil sites (i.e., ARA-01, ARA-12, and ARA-23) is completed. The draft Phase II Remedial Action Report is to be transmitted to the Agencies by January 2006, by which time this waste will be disposed of. Both the ARA-16 sludge waste and the ARA-02 sludge waste currently in storage will be managed in accordance with INL resident procedures and all applicable federal and state regulations. In addition, the status of the waste streams will be documented in the annual institutional control status report.

The disposal of this waste, of course, is contingent upon the availability of a treatment, storage, and disposal facility that is capable of handling the described waste. In the interim, the waste will be stored in compliant facilities and inspected on a weekly basis in accordance with INL procedures. The INL will work with the Agencies to ensure that the storage of the WAG 5 waste streams is compliant with all regulatory requirements and any long-term storage needs identified or that are identified. In addition, the INL will review and actively pursue alternative disposal options for this waste.

4.3 Revegetation of Phase I Sites

The reseeding and mulching requirements for the Phase I sites were delineated in Specification 02486, "Revegetation," provided in Appendix B of the *Waste Area Group 5 Remedial Design/Remedial Action Work Plan, Phase 1* (DOE-ID 2001). The specification provided that a grass seed mix consisting of P-27 Siberian wheatgrass, "Ephriam" crested wheatgrass, and "Sodar" streambank wheatgrass be applied at a rate of 1.8 kg, 2.3 kg, and 4.1 kg (4 lb, 5 lb, and 9 lb) per acre pure live seed, respectively. Further consultation led to a modification of the seed mix and application rate per acre as follows:

- Wyoming big sagebrush (0.23 kg [0.5 lb])
- Green rabbitbrush (0.23 kg [0.5 lb])
- Indian rice grass "Rimrock" (0.9 kg [2 lb])
- Thickspike wheatgrass "Bannock" (0.9 kg [2 lb])
- Streambank wheatgrass "Sodar" (0.9 kg [2 lb])
- Bluebunch wheatgrass "Goldar" (0.9 kg [2 lb])

- Munro globemallow (0.45 kg [1 lb])
- Northern sweetvetch (0.45 kg [1 lb]).

Because of concerns about the potential spread of contamination at the ARA-02 site after a snowfall, mulching of this area was not performed at the completion of the Phase I activities. Inspection of the site the following spring showed that vegetation growth was acceptable; therefore, mulching was not required.

4.4 PBF-37

A New Site Identification Form (Form 435.36) was initiated in May 2004 to address the contaminated soils that were found beneath the PER-751 radioactive waste storage tank pumphouse's slab and foundation. The primary contamination was determined to be radionuclides. As such, it was determined that the contamination was similar to other low-level radioactively contaminated soils remediated under the *Record of Decision Power Burst Facility and Auxiliary Reactor Area, Operable Unit 5-12* (DOE-ID 2000a). Therefore, the Agencies agreed that the soils at PBF-37 would be remediated in conjunction with the other remedial actions being completed for OU 5-12 and would meet or exceed the RAOs established in Section 8.6 of the ROD (DOE-ID 2000a). The selected remedy for PBF-37 was excavation and disposal at the ICDF.

5. QUANTITIES AND TYPES OF WASTE GENERATED

Waste generated during the Phase I remedial activities was managed in accordance with the requirements delineated in Appendix J of the *Waste Area Group 5 Remedial Design/Remedial Action Work Plan, Phase 1* (DOE-ID 2001). For Phase II, waste was managed in accordance with the requirements outlined in Appendix D of the *Remedial Design/Remedial Action Work Plan, Phase II, for Waste Area Group 5* (DOE-ID 2003a). Waste Generator Services at the INL was responsible for managing all waste generated during Phase I activities as well as waste generated during the Phase II activities that fell out of the purview of the Phase II subcontractor. The Phase II subcontractor was responsible for managing all waste disposed of at the ICDF. Waste management was performed in accordance with resident procedures.

5.1 Waste Minimization and Segregation

Waste minimization for both the Phase I and Phase II activities was achieved primarily through design and planning to maintain efficient operations. To achieve this goal, waste streams were segregated primarily by the field activity being conducted at the time of generation. Waste types generated included conditional industrial waste, low-level waste, RCRA hazardous waste, mixed low-level waste, and TSCA-regulated waste. Waste containers were provided for each specific waste stream and were maintained inside the work area until removed for either storage or disposal.

5.2 Packaging and Labeling

5.2.1 Phase I Activities

Containers for storing hazardous waste met the requirements of 40 CFR 264, Subpart I, "Use and Management of Containers." Waste was packaged in accordance with the criteria set forth in the *Idaho National Engineering and Environmental Laboratory Waste Acceptance Criteria* (DOE-ID 2005b). The types of containers used included the following:

- 208-L (55-gal), open-top drums
- Open-top, roll-on/roll-off containers
- 1.2 × 1.2 × 2.4-m (4 × 4 × 8-ft) wooden boxes
- 0.6 × 1.2 × 2.4-m (2 × 4 × 8-ft) wooden boxes
- 1.2 × 1.2 × 2.4-m (4 × 4 × 8-ft) metal boxes
- 76-L (20-gal), open-top drums
- Low-level waste packaging (soft-sided packaging).

Bulk waste destined for disposal at the CFA landfill was shipped in a dump truck with water destined for disposal at the CFA Sewage Treatment Plant being shipped in a HIC. The sludge from the ARA-16 tank was stored at the CERCLA storage unit located at the ARA-I facility in a vented HIC up until the time it was shipped to TAN where it currently remains in compliant storage awaiting treatment with the V-Tanks waste. In addition to the ARA-16 tank sludge, other waste being stored in this area includes samples of the ARA-16 tank waste, sampling debris, debris generated during the transfer of the ARA-16 HIC to TAN, carbon samples from the filter used during dewatering of the ARA-16 tank waste, the carbon filter, and a HEPA filter used during remediation of the ARA-16 radionuclide tank site. All containers are labeled in accordance with resident procedures and all state, federal, and local regulations.

5.2.2 Phase II Activities

For waste disposed of by the subcontractor in the ICDF, the containers of choice were roll-on/roll-off containers fitted with a liner. The liner was spot sealed using a heat gun prior to shipment with a tarp affixed to the container to mitigate the potential for spread of contamination. The waste met the requirements outlined in the *Waste Acceptance Criteria for ICDF Landfill* (DOE-ID 2005c). Table 5-1 summarizes the waste types that were generated during both the Phase I and Phase II remedial activities, including current disposal status. Table 5-2 provides a comparison of estimated waste volumes from the *Record of Decision Power Burst Facility and Auxiliary Reactor Area, Operable Unit 5-12* (DOE-ID 2000a) to the actual volumes generated for the specified waste streams.

Table 5-1. Waste Area Group 5 waste summary.

Waste Stream	Volume	Disposal Site	Disposal Status
ARA-02: ARA-I Sanitary Waste System			
Seepage pit sludge	Seven 208-L (55-gal) drums (3,166 lb)	Envirocare	Disposed of 12/2000
Septic Tank No. 2 sludge	Nine 208-L (55-gal) drums (3,870 lb)	TSCA incinerator	Disposed of 01/2004
Debris	Thirteen 1.2 × 1.2 × 2.4-m (4 × 4 × 8-ft) metal boxes (77,165 lb)	Envirocare	Disposed of 12/2000
Debris	Nine 0.6 × 1.2 × 2.4-m (2 × 4 × 8-ft) wood boxes (32,530 lb)	Envirocare	Disposed of 12/2000
Debris	One 1.2 × 1.2 × 2.4-m (4 × 4 × 8-ft) wood box (4,000 lb)	Envirocare	Disposed of 04/2004
Debris	Three 1.2 × 1.2 × 2.4-m (4 × 4 × 8-ft) TX4 boxes (17,860 lb)	Envirocare	Disposed of 12/2000
Debris	Three 208-L (55-gal) drums (636 lb)	Envirocare	Disposed of 12/2000
Debris	Three 18 yd^3 roll-offs (93,860 lb)	Envirocare	Disposed of 12/2000
Debris	One 25 yd^3 roll-off (29,130 lb)	Envirocare	Disposed of 12/2000
Debris	One 1.2 × 1.2 × 2.4-m (4 × 4 × 8-ft) B-25 metal box (410 lb)	Envirocare	Disposed of 12/2000
Debris	Eight 208-L (55-gal) drums (1,674 lb)	Envirocare	Disposed of 07/2004
Lead rings	Four 19-L (5-gal) drums (314 lb)	Envirocare	Disposed of 07/2004
Sample returns	Three 208-L (55-gal) drums and three 19-L (5-gal) pails (133 lb)	TSCA incinerator	Disposed of 01/2004

Table 5-1. (continued).

Waste Stream	Volume	Disposal Site	Disposal Status
ARA-07: ARA-II Seepage Pit to the East (ARA-720A)			
Debris	4.3 m^3 (5.6 yd^3)	CFA landfill	Disposed of 07/2000
ARA-08: ARA-II Seepage Pit to the West (ARA-720B)			
Debris	2.3 m^3 (3.0 yd^3)	CFA landfill	Disposed of 07/2000
ARA-13: ARA-III ARA-III Sanitary Sewer Leach Field and Septic Tank (ARA-740)			
Septic tank sludge	One soft-sided sack (20,000 lb)	RWMC	Disposed of 06/2001
Distribution box sludge	One 208-L (55-gal) drum (350 lb)	PermaFix	Disposed of 04/2004
Water	21,198 L (5,600 gal)	CFA Sewage Treatment Plant	Disposed of 05/2001
Debris	One 12-yd^3 dump truck	CFA landfill	Disposed of 05/2001
Debris	Two 208-L (55-gal) drums (205 lb)	RWMC	Disposed of 05/2002
ARA-16: ARA-I Radionuclide Tank			
Piping	Five 0.6 × 1.2 × 1.8-m (2 × 4 × 6-ft) metal boxes, grouted	Stored at SSA for disposal at ICDF	Shipped to SSA 08/2001 through 09/2001
Tank	1.4 × 1.4 × 4.0-m (4.5 × 4.5 × 13-ft) concrete monolith	Stored at SSA for disposal at ICDF	Shipped to SSA 04/2002
Sludge	High-integrity container with 303 L (80 gal) of liquid and sludge	V-Tanks treatment system	Stored at TAN hot shop; treatment is planned for 06/2005.
Stabilized liquid	Nineteen 208-L (55-gal) drums	Stored at SSA for disposal at ICDF	Shipped to SSA on 09/2001
Carbon filter	One 20 × 60-in. unit (6 ft^3 of carbon)	Envirocare	Stored at CERCLA storage unit at ARA-I; shipment is planned for 06/2005.
HEPA filter	One 0.9 × 1.2 × 0.76-m (3 × 4 × 2.5-ft) unit	Envirocare	Stored at CERCLA storage unit at ARA-I; shipment is planned for 06/2005.
Miscellaneous debris	Nine 0.6 × 1.2 × 1.8-m (2 × 4 × 6-ft) metal boxes, grouted	Stored at SSA for disposal at ICDF	Shipped to SSA on 09/2001
Vault and gravel	Two soft-sided sacks (20,000 lb each)	RWMC	Disposed of 10/2001

Table 5-1. (continued).

Waste Stream	Volume	Disposal Site	Disposal Status
Unused/unaltered samples, analytical residues, and miscellaneous analytical debris	Six containers, 0.9 m^3 (33 ft^3)	Samples are planned to be combined with the ARA-16 sludge; treatment/disposal alternatives are being investigated for other waste streams.	Stored at CPP-1617, awaiting disposal
Unused/unaltered liquid samples	Two 1-L glass containers and 16 40-mL glass vials	PermaFix	Stored at CERCLA storage unit at ARA; shipment is planned for 06/2005.
Unused/unaltered sludge sample	10-mL	Sample is planned to be combined with the ARA-16 sludge.	Stored at CERCLA storage unit at ARA
ARA-21: ARA-IV Test Area Septic Tank and Leach Pit No. 2			
Water	3,785 L (1,000 gal)	CFA Sewage Treatment Plant	Disposed of 10/2000
ARA-25: ARA-I Soils beneath the ARA-626 Hot Cells			
Debris	39 soft-sided sacks (20,000 lb each)	RWMC	Disposed of 08/2001 through 09/2001
Phase II Contaminated Soil Sites			
ARA-01 soil with some debris	23 roll-on/roll-off containers (497 tons)	ICDF	Disposed of 04/22/2004 through 04/26/2004
ARA-12 soil with some debris	146 roll-on/roll-off containers (3,156 tons)	ICDF	Disposed of 04/19/2004 through 08/3/2004
ARA-23 soil with some debris	3,133 roll-on/roll-off containers (69,336 tons)	ICDF	Disposed of 10/16/2003 through 12/1/2004
Mixed waste from decontamination of equipment	1,202 lb	Full container storage area	Awaiting stabilization prior to disposal at the ICDF

ARA = Auxiliary Reactor Area
CERCLA = Comprehensive Environmental Response, Compensation, and Liability Act
CFA = Central Facilities Area
CPP = Chemical Processing Plant
HEPA = high-efficiency particulate air
ICDF = Idaho CERCLA Disposal Facility
RWMC = Radioactive Waste Management Complex
SSA = Staging and Storage Annex
TAN = Test Area North
TSCA = Toxic Substances Control Act

Table 5-2. Waste volume comparison.

Site	Site Name	ROD Estimated Volume (m^3)	Actual Volume (m^3)
ARA-01	ARA-I chemical evaporation pond	1,821	256
ARA-12	ARA-III radioactive waste leach pond	1,503	1,625
ARA-23	ARA-I and ARA-II radiologically contaminated surface soil and subsurface structures	35,538	35,700
ARA-25	ARA-I contaminated soil beneath the ARA-626 hot cells	54	298
PBF-16	SPERT-II leach pond	382	0

ARA = Auxiliary Reactor Area
PBF = Power Burst Facility
ROD = Record of Decision
SPERT = Special Power Excursion Reactor Test

5.2.3 PBF-37 Activities

Remediation of the PBF-37 contaminated soil resulted in the removal and containerization of 12 soft-sided bags with a total volume of approximately 61 m^3 (80 yd^3) of contaminated soil classified as CERCLA waste. This waste was transported via flatbed to the PBF control area, where it is currently stored in a registered CERCLA storage area. Disposal of the bagged, contaminated soil is planned for the spring of 2005 in the ICDF.

Additional waste includes approximately 1.5 m^3 (2 yd^3) of low-level waste PPE. This waste was commingled with existing low-level waste at the PBF reactor area. The waste will eventually be transported to the RWMC for disposal.

5.3 Waste Types

Various types of waste were generated, including debris (e.g., PPE, plastic sheeting, concrete, concrete piping, pumice/concrete blocks, gravel, and wood), water (both stabilized and direct disposed), sludge, activated carbon, lead, and soil. Other waste forms included unused/unaltered samples, analytical residues, sample containers, residual soils and debris resulting from hydraulic spills, and contaminated equipment. The following subsections summarize the waste types generated at each site.

5.3.1 ARA-01: ARA-I Chemical Evaporation Pond

Waste generated during remediation of the ARA-01 chemical evaporation pond included primarily contaminated soils with some PPE. All of the contaminated soil as well as the PPE were transported in roll-on/roll-off containers for direct disposal in the ICDF. Other waste streams included unused/unaltered samples, analytical residues, and sample containers. The analytical laboratory disposed of these “other” waste streams.

5.3.2 ARA-02: ARA-I Sanitary Waste System

Waste generated during remediation of the ARA-02 sanitary waste system included sludge (bottom cleaning of the seepage pit), concrete and concrete piping (excavation and sizing of system components), three concrete septic tanks, three concrete manholes, pumice blocks (excavation and disposal of the seepage pit), PPE, plastic sheeting, and lead rings from pipe joints. Other waste streams included unused/unaltered samples, analytical residues, and sample containers. The analytical laboratory disposed of these "other" waste streams.

5.3.3 ARA-07: ARA-II Seepage Pit to the East

Waste generated during closure of the ARA-07 seepage pit included the roof structure and roofing material, pumice/concrete blocks, PPE, plastic sheeting, and fencing. This waste was disposed of at the CFA landfill. No other waste streams were generated during this activity.

5.3.4 ARA-08: ARA-II Seepage Pit to the West

Waste generated during closure of the ARA-08 seepage pit included the three concrete slabs that overlayed the pit. This waste was disposed of at the CFA landfill. No other waste streams were generated during this activity.

5.3.5 ARA-12: ARA-III Radioactive Waste Leach Pond

Waste generated during remediation of the ARA-12 radioactive waste leach pond included primarily contaminated soils and basalt with some PPE. All of the contaminated soil and basalt along with the PPE were transported in roll-on/roll-off containers for direct disposal in the ICDF. Other waste streams included unused/unaltered samples, analytical residues, and sample containers. The analytical laboratory disposed of these "other" waste streams.

5.3.6 ARA-13: ARA-III Sanitary Sewer Leach Field and Septic Tank

Waste generated during closure of the ARA-13 septic system included the sludge in the septic tank and distribution box, water from the septic tank, concrete debris (tops of the septic tank and the manhole), PPE, and plastic sheeting. The sludge from the septic tank was solidified and disposed of at the RWMC. The sludge from the distribution box was solidified and shipped to PermaFix for disposal. Two drums of debris were disposed of at the RWMC in May 2002. The water from the septic tank was disposed of at the CFA Sewage Treatment Plant. Concrete debris, PPE, and plastic sheeting were surveyed and disposed of as uncontaminated waste at the CFA landfill. Any materials that had come in contact with contaminated sludge were disposed of with the corresponding sludge waste stream. Other waste streams included unused/unaltered samples, analytical residues, and sample containers. The analytical laboratory disposed of these "other" waste streams.

5.3.7 ARA-16: ARA-I Radionuclide Tank

Waste generated during remediation of the ARA-16 radionuclide tank included sludge and liquid waste (generated during cleaning of the tank), tank rinsate (water generated during decontamination and rinsing), concrete (generated from sizing and removal of the vault), gravel (from within the vault), fencing, stainless-steel piping, stainless-steel tank, PPE, plastic sheeting, and contaminated equipment generated during remediation. The liquid tank waste and rinsate water were stabilized and shipped to the SSA for eventual disposal in the ICDF. The sludge waste from the tank is in a HIC stored at the TAN hot shop awaiting treatment along with the V-Tanks waste in the system being fabricated for that waste

stream. Two HEPA filters used during the ARA-16 remedial action were transported to the Test Reactor Area, which is now called the Reactor Technology Complex, for use on other projects. Another HEPA filter is stored at the CWSA and is awaiting shipment to Envirocare for encapsulation and disposal. All other solid waste was encapsulated in concrete and shipped to the SSA for eventual disposal in the ICDF. Other waste streams included unused/unaltered samples, analytical residues, and sample containers. Some unused/unaltered samples and analytical residues were returned from the laboratory to the project for disposal. It is planned for the unused/unaltered samples to be removed from the container and returned to the parent waste stream. The containers will be combined with other debris for encapsulation. Any altered samples and the analytical residues returned to the project are being stored in the compliant storage awaiting treatment and disposal at an available off-Site treatment, storage, and disposal facility. The analytical laboratory disposed of all other unused/unaltered samples, analytical residues, and sample containers.

5.3.8 ARA-21: ARA-IV Test Area Septic Tank and Leach Pit No. 2

Waste generated during closure of the ARA-21 septic system included water removed from the tanks, which was disposed of at the CFA Sewage Treatment Plant. Metal manholes, connecting piping, and lids were removed from the two tanks and were disposed of at the CFA landfill. A minimal quantity of PPE and plastic sheeting was generated; it was surveyed and disposed of as uncontaminated waste at the CFA landfill. Other waste streams included unused/unaltered samples, analytical residues, and sample containers, which were disposed of by the analytical laboratory.

5.3.9 ARA-23: Radiologically Contaminated Surface Soil and Subsurface Structures Associated with ARA-I and ARA-II

Waste generated during remediation of the ARA-23 radiologically contaminated soils included contaminated soils, basalt, concrete debris, concrete piping, electrical debris, fence posts and fencing, plastic liners, and PPE. All of this contaminated material was transported in roll-on/roll-off containers for direct disposal in the ICDF. In addition, other waste streams included unused/unaltered samples, analytical residues, sample containers, and debris resulting from the decontamination of equipment. The analytical laboratory disposed of the samples, residues, and containers. The decontamination debris is currently stored at the full-container storage area awaiting treatment at the Staging, Storage, Sizing, and Treatment Facility prior to disposal at the ICDF.

5.3.10 ARA-25: ARA-I Soil beneath the ARA-626 Hot Cells

Waste generated during remediation of the ARA-25 soil and hot cell foundation included the soil removed from the area underlying the former ARA-626 hot cell site, concrete from the hot cell foundation walls, PPE, and plastic sheeting. This waste was disposed of at the RWMC. The hot cell roof that was overlying the hot cell site was field screened for radiological contamination using standard RadCon protocols. Finding none, the roof was disposed of at the CFA landfill. No other waste streams were generated during this activity.

5.3.11 PBF-37: Contaminated Soils beneath the PER-751 Pumphouse Floor Slab and Foundation

The primary waste types that were generated during sampling and remediation activities included contaminated soil and low-level waste PPE. Other anticipated waste may include unused/unaltered samples and sample containers returned to the site by the analytical laboratory.

6. PREFINAL INSPECTION

6.1 Phase I

The prefinal inspection of the WAG 5 Phase I sites was conducted on October 2 and 3, 2001, in accordance with the prefinal inspection checklist. The project had most items 100% complete. The items not yet completed at the time of the prefinal inspection included the following:

- Shipping the ARA-16 tank sludge and carbon filter for off-Site treatment and disposal
- Shipping the encapsulated ARA-16 tank to the SSA for eventual disposal in the ICDF
- Performing a final survey and backfilling the ARA-16 excavation
- Shipping the ARA-13 distribution box (TSCA-regulated [for PCBs]) sludge off-Site for disposal
- Shipping the ARA-02 debris and lead rings off-Site for disposal
- Shipping the ARA-16 samples off-Site for treatment and disposal
- Decontaminating equipment
- Demobilizing the ARA-16 tank site
- Reseeding disturbed areas, where necessary
- Completing the annual inspection of the institutional control sites
- Analyzing the ARA-16 carbon filter samples.

Progress was accepted as satisfactory by the Agencies in attendance. In the time since the prefinal inspection, the majority of the items not yet completed at the time of the prefinal inspection have been done. The ARA-16 tank sludge has been shipped to TAN for treatment concurrently with the V-Tanks waste in the system being fabricated for that purpose. The ARA-16 carbon filter has been prepared for shipment off-Site for disposal based upon successful completion of the analysis of the ARA-16 carbon filter samples. The ARA-16 encapsulated tank has been shipped to the SSA where it awaits disposal in the ICDF. The ARA-16 excavation has been surveyed and backfilled in accordance with the *Waste Area Group 5 Remedial Design/Remedial Action Work Plan, Phase 1* (DOE-ID 2001). The ARA-13 distribution box sludge and ARA-02 debris and lead rings have been shipped off-Site for disposal. The ARA-16 samples that were originally destined for off-Site shipment for treatment and disposal have been consolidated with the ARA-16 tank sludge for treatment with the V-Tanks waste. All equipment used during the Phase I activities was decontaminated followed by demobilization from the ARA-16 tank site. The disturbed areas were reseeded in accordance with the *Waste Area Group 5 Remedial Design/Remedial Action Work Plan, Phase 1* (DOE-ID 2001) with the aforementioned change in the seed mix as described in Section 4.3. The institutional control sites were inspected by WAG 5 and will continue to be inspected under the purview of the Long-Term Stewardship organization.

6.2 Phase II

The prefinal inspection of the WAG 5 Phase II sites was conducted on September 7, 2004, in accordance with the prefinal inspection checklist. The items not yet completed at the time of the prefinal inspection included the following:

- Completing the ARA-23 excavation, transport, and disposal of contaminated soils
- Performing final surveys and backfilling the ARA-23 excavation
- Performing confirmation sampling of ARA-23
- Revegetating the affected remediation areas
- Decontaminating equipment
- Performing demobilization.

Progress was accepted as satisfactory by the Agencies in attendance. The items listed above have since been completed. The Phase II Prefinal Inspection Checklist is provided in Appendix G.

7. SUMMARY AND VERIFICATION OF WORK PERFORMED

The primary work activities for the OU 5-12 Phase I remedial action included the following:

- Removing inactive septic and waste system piping, tanks, and belowgrade structures (as necessary)
- Removing contaminated soil and debris
- Packaging, shipping, and transporting remedial action waste
- Verifying that the soils remaining in place and stockpiled soils used for backfill did not contain contamination in excess of the remedial action goals
- Backfilling and contouring the excavated areas
- Reseeding and/or stabilizing disturbed areas.

The primary work activities for the OU 5-12 Phase II remedial action included the following:

- Removing contaminated soil and debris
- Packaging, shipping, and transporting remedial action waste
- Verifying that the soils remaining in place did not contain contamination in excess of the remedial action goals
- Backfilling and contouring the excavated areas
- Reseeding and/or stabilizing disturbed areas.

7.1 Summary of Work Performed

The OU 5-12 Phase I and Phase II remedial actions have been completed in accordance with the *Waste Area Group 5 Remedial Design/Remedial Action Work Plan, Phase 1* (DOE-ID 2001) and the *Remedial Design/Remedial Action Work Plan, Phase II, for Waste Area Group 5* (DOE-ID 2003a). The remedial actions for each site included the following:

- **ARA-01:** Contaminated soils were removed, packaged, and disposed of at the ICDF. Near real-time XRF analyses were performed coupled with the collection of confirmation samples for laboratory analysis following excavation to demonstrate that the remedial action goal had been achieved. The area was contoured and reseeded.
- **ARA-02:** The ARA-02 piping was removed, sized, packaged, and shipped to Envirocare for disposal. The three manholes, three septic tanks, seepage pit pumice blocks and gravel, and seepage pit sludge were also packaged and sent to Envirocare for disposal. Excavations were screened for radiological and VOC contamination, backfilled appropriately, and reseeded.
- **ARA-07:** The roof structure and top two courses of cement blocks were removed and disposed of. In accordance with IDAPA regulations (IDAPA 58.01.03.007), the seepage pit was filled with earthen material and abandoned.
- **ARA-08:** The concrete slab covering the seepage pit was removed and disposed of. In accordance with IDAPA regulations (IDAPA 58.01.03.007), the seepage pit was filled with earthen material and abandoned.

- **ARA-12:** Contaminated soils were removed, packaged, and disposed of at the ICDF. Near real-time XRF analyses and in situ gamma surveys were performed to guide additional excavation. Near real-time XRF analyses and in situ gamma surveys were performed coupled with the collection of confirmation samples for laboratory analysis following excavation to demonstrate that the remedial action goal had been achieved. The area was contoured and reseeded.

- **ARA-13:** The manhole, top sections of the three septic tanks, and the lid to the distribution box were removed and disposed of. The water was removed separating it from the sludge and disposed of at the CFA Sewage Treatment Plant. The sludge from the manhole and septic tanks was removed, stabilized, and disposed of at the RWMC, while the TSCA-regulated sludge from the distribution box was dispositioned at PermaFix. In accordance with IDAPA regulations (IDAPA 58.01.03.007), holes were placed in the bottoms of the septic system components that were to remain in place. These components were then filled with earthen material and abandoned in place. The excavations were backfilled, contoured to grade, and reseeded.

- **ARA-16:** The piping was removed, sized, and encapsulated for shipment to the SSA and eventual disposal at the ICDF. The tank waste was pumped into a dewatering HIC from which the water was separated from the sludge. The water was pumped through a carbon filter into 208-L (55-gal) drums in which it was stabilized for shipment to the SSA and eventual disposal in the ICDF. The sludge in the HIC was placed into compliant storage at the ARA-I facility until it was shipped to TAN for treatment in the system being fabricated for the V-Tanks waste. The tank was crushed to reduce the volume, filled with grout, encapsulated in concrete, and shipped to the SSA awaiting disposal in the ICDF. The tank vault and gravel were packaged and shipped to the RWMC. All excavations were field screened for radiological and organic contamination. Contaminated soil was sampled and analyzed (refer to Appendix E) to determine the waste disposition path and disposed of appropriately at the RWMC. All excavations were backfilled, contoured to grade, and reseeded.

- **ARA-21:** The liquid waste in the septic tank and chlorine contact tank was removed and disposed of at the CFA Sewage Treatment Plant. The manholes, connecting piping, and tank lids were disposed of at the CFA landfill. In accordance with IDAPA regulations (IDAPA 58.01.03.007), holes were placed in the bottoms of each tank and the tanks were filled with earthen material and abandoned in place.

- **ARA-23:** The radiologically contaminated soils were removed, packaged, and disposed of at the ICDF, as were subsurface structures encountered during the remedial action. Basalt was reached in areas within the confines of the ARA-II facility. In situ surveys with the GPRS were performed during the remedial action to guide the excavation, and in situ gamma surveys were performed coupled with the collection of confirmation samples for laboratory analysis following excavation to demonstrate that the remedial action goal had been achieved. All excavations greater than 0.3 m (1 ft) were backfilled, contoured to grade, and reseeded.

- **ARA-25:** The radiologically contaminated foundation and associated soils were removed, packaged, and disposed of at the RWMC. Basalt was reached, and elevated levels of Cs-137 were still present. In accordance with the *Record of Decision Power Burst Facility and Auxiliary Reactor Area, Operable Unit 5-12* (DOE-ID 2000a), and upon verbal concurrence of the Agencies, the excavation was backfilled with earthen material, as the intent of the ROD had been met. As stated in Section 8.6 of the ROD (DOE-ID 2000a), remediation goals can be satisfied by either cleaning up to the identified contaminant concentration or by removing all soil down to the basalt interface. Removing soil down to basalt is protective, because surface exposure pathways have been eliminated. The area was contoured to grade and reseeded.

- **PBF-37:** Characterization samples were collected prior to remediation and an in situ gamma survey of the area was performed. The contaminated soils were removed, packaged, and staged for disposal at the ICDF. An in situ gamma survey was performed following the completion of the removal of contaminated soils that demonstrated that the remediation goal had been achieved. Confirmation samples were collected and submitted for laboratory analysis.

7.2 Verification of Work Performed

Verification of the work performed was documented throughout the duration of the project. The job site supervisor and the subcontractor maintained daily logbooks that detailed each day's work activities, including prejob briefings, number and names of personnel on the job site, and their functions. Copies of the daily logbooks can be obtained from the project files and on the INL Intranet through the INL Optical Imaging System. Periodic management assessments were conducted during the remedial action to verify that work was being completed in accordance with the *Waste Area Group 5 Remedial Design/Remedial Action Work Plan, Phase 1* (DOE-ID 2001) or the *Remedial Design/Remedial Action Work Plan, Phase II, for Waste Area Group 5* (DOE-ID 2003a), as appropriate, and that the work was on schedule.

A prefinal inspection of the Phase I sites was conducted with the Agencies on October 2 and 3, 2001, to verify that the work outlined in the *Waste Area Group 5 Remedial Design/Remedial Action Work Plan, Phase 1* (DOE-ID 2001) was accomplished. Similarly, a prefinal inspection of the Phase II sites was conducted on September 7, 2004, to verify that the work outlined in the *Remedial Design/Remedial Action Work Plan, Phase II, for Waste Area Group 5* (DOE-ID 2003a) was accomplished. Results of these two inspections are presented in Appendixes F and G, respectively.

As-built drawings were prepared depicting the final remedial actions at the ARA-07, ARA-08, ARA-13, ARA-16, ARA-21, and ARA-25 Phase I sites. These drawings are provided in Appendix A. Drawings depicting the progress of the remedial action are presented in Appendix B for ARA-01, ARA-12, and ARA-23.

7.3 Performance Standards and Construction Quality Control

The following subsections discuss the performance standards and construction quality control for each site requiring remediation under the *Record of Decision Power Burst Facility and Auxiliary Reactor Area, Operable Unit 5-12* (DOE-ID 2000a). To ensure the quality control of in situ measurements, established standard operating procedures were followed that included calibration and verification requirements for the instruments used. Samples collected and sent to a laboratory for confirmation were analyzed following standard analytical methods that included requirements for calibration and verification.

7.3.1 ARA-01: ARA-I Chemical Evaporation Pond

For ARA-01, the contaminated soil was removed in accordance with the requirements delineated in the *Record of Decision Power Burst Facility and Auxiliary Reactor Area, Operable Unit 5-12* (DOE-ID 2000a). Removal and disposal of soil contaminated with arsenic mitigated the human health risk associated with this site, while removal and disposal of the same soil also contaminated with selenium and thallium reduced the ecological risk. The 95% UCL for arsenic from the sampling results was 7.3 mg/kg, as compared to the remedial action goal of 10 mg/kg. For selenium, all but one of the results were below the method detection limit with the one detectable concentration being 0.2 mg/kg, as compared to the remedial action goal of 2.2 mg/kg. All thallium results were below the remedial action goal of 4.3 mg/kg, with a 95% UCL of 1.5 mg/kg. The data sets

for the three COCs at the ARA-01 site were analyzed following EPA guidance provided in *Calculating Upper Confidence Limits for Exposure Point Concentrations at Hazardous Waste Sites* (EPA 2002). Based upon the comparison of the postremediation concentrations (i.e., 95% UCL) to the remediation goals, as prescribed by the *Field Sampling Plan for the Waste Area Group 5, Remedial Action, Phase II* (DOE-ID 2003b), the remediation of the ARA-01 site is determined to be successful. Table 7-1 summarizes the confirmation sample analytical results versus the remediation goals for each COC.

Table 7-1. ARA-01 contaminant concentrations.

Contaminant of Concern	Maximum Concentration prior to Remediation	Remediation Goal	Postremediation Concentration
Arsenic	25.8 mg/kg	10 mg/kg	7.3 mg/kg
Selenium	27.7 mg/kg	2.2 mg/kg	0.2 mg/kg
Thallium	59.2 mg/kg	4.3 mg/kg	1.5 mg/kg

7.3.2 ARA-02: ARA-I Sanitary Waste System

For ARA-02, the entire septic system was removed in accordance with the requirements of the *Record of Decision Power Burst Facility and Auxiliary Reactor Area, Operable Unit 5-12* (DOE-ID 2000a). The seepage pit sludge was removed and disposed of, thereby mitigating the human health risk associated with this site. In situ measurement of the soil immediately underlying the seepage pit location demonstrated that the Cs-137 concentration remaining in the soil was 0.36 ± 0.13 pCi/g, which is below the 8.5-pCi/g remediation goal at the 1E-04 human health risk concentration for the residential 100-year scenario decayed through the exposure period. It is also below the average Cs-137 concentration of 0.82 pCi/g for the INL at the 95% UCL for the mean soil concentration averaged over a 3-m (10-ft) soil interval (INEL 1996). Using Cs-137 as a marker and assuming the concentrations of the other COCs are present at the same ratio as the maximum concentrations provided in Table 21 of the *Record of Decision Power Burst Facility and Auxiliary Reactor Area, Operable Unit 5-12* (DOE-ID 2000a), the concentrations of the remaining contaminants were derived as provided in Table 7-2. Based upon comparison of the postremediation concentrations to the remediation goals, the remediation of the ARA-02 site is determined to be successful.

Table 7-2. ARA-02 contaminant concentrations.

Contaminant of Concern	Maximum Concentrations prior to Remediation	Remediation Goal	Postremediation Concentration
Cs-137	178 pCi/g	8.5 pCi/g	0.36 pCi/g
Ra-226	89.6 pCi/g	1.2 or 2.1 pCi/g[a]	0.18 pCi/g
U-235	120 pCi/g	6.2 pCi/g	0.24 pCi/g
U-238	190 pCi/g	10.6 pCi/g	0.38 pCi/g
Aroclor-1242	23.5 mg/kg	1 mg/kg	0.05 mg/kg
Lead	1,290 mg/kg	400 mg/kg	2.61 mg/kg

a. A goal of 2.1 pCi/g will be used for comparing sample results that may include interference from U-235; otherwise, a goal of 1.2 pCi/g will be used. Since U-235 is present at this site, the use of the 2.1-pCi/g remediation goal would be appropriate even though the postremediation concentration is well below either of the two Ra-226 remediation goal concentrations.

7.3.3 ARA-12: ARA-III Radioactive Waste Leach Pond

For ARA-12, the contaminated soil was removed in accordance with the requirements outlined in the *Record of Decision Power Burst Facility and Auxiliary Reactor Area, Operable Unit 5-12* (DOE-ID 2000a). Removal and disposal of soil contaminated with Ag-108m mitigated the human health risk associated with this site, while removal and disposal of the same soil also contaminated with copper, mercury, and selenium reduced the ecological risk. Confirmation sampling for the ARA-12 site for Ag-108m included both in situ measurements and physical samples analyzed by an off-Site laboratory. The 95% UCLs for Ag-108m for the in situ measurements and confirmation samples were 0.43 pCi/g and 0.38 pCi/g, respectively, compared to the remedial action goal of 0.75 pCi/g. Confirmation sampling for copper, mercury, and selenium included physical samples analyzed by an off-Site laboratory. For copper, mercury, and selenium, all results were below the remedial action goals of 220 mg/kg, 0.5 mg/kg, and 2.2 mg/kg, respectively. The respective 95% UCLs were 27.5 mg/kg, 0.3 mg/kg, and 1.0 mg/kg. The data sets for the four COCs at the ARA-12 site were analyzed following EPA guidance provided in *Calculating Upper Confidence Limits for Exposure Point Concentrations at Hazardous Waste Sites* (EPA 2002). Based upon the comparison of the postremediation concentrations (i.e., 95% UCL) to the remediation goals, as prescribed by the *Field Sampling Plan for the Waste Area Group 5, Remedial Action, Phase II* (DOE-ID 2003b), the remediation of the ARA-12 site is determined to be successful. Table 7-3 summarizes the confirmation sample analytical results versus the remediation goals for each COC.

Table 7-3. ARA-12 contaminant concentrations.

Contaminant of Concern	Maximum Concentration prior to Remediation	Remediation Goal	Postremediation Concentration
Ag-108m	67.2 pCi/g	0.75 pCi/g	0.38 pCi/g—lab 0.43 pCi/g—in situ
Copper	623 mg/kg	220 mg/kg	27.5 mg/kg
Mercury	1.4 mg/kg	0.5 mg/kg	0.3 mg/kg
Selenium	2.7 mg/kg	2.2 mg/kg	1.0 mg/kg

7.3.4 ARA-16: ARA-I Radionuclide Tank

For ARA-16, the waste was removed from the tank, the tank as well as all associated piping, and the concrete vault was removed in accordance with the requirements of the *Record of Decision Power Burst Facility and Auxiliary Reactor Area, Operable Unit 5-12* (DOE-ID 2000a). In situ measurement of the basalt/soil underlying the tank and vault demonstrated that the maximum Cs-137 concentration remaining was 1.5 pCi/g, which is below the 23-pCi/g remediation goal at the 1E-04 human health risk concentration for the residential 100-year scenario decayed through the exposure period. Because the remaining contaminant concentration is below the remediation goal, the remediation of the ARA-16 site is determined to be successful. The sludge that was removed from the tank will be treated concurrently along with the V-Tanks waste in the system currently being fabricated for that project.

7.3.5 ARA-23: Radiologically Contaminated Surface Soil and Subsurface Structures Associated with ARA-I and ARA-II

For ARA-23, the contaminated soil was removed in accordance with the requirements delineated in the *Record of Decision Power Burst Facility and Auxiliary Reactor Area, Operable Unit 5-12*

(DOE-ID 2000a). Removal and disposal of soil contaminated with Cs-137 mitigated the human health risk associated with this site. Confirmation sampling for the ARA-23 site included both in situ measurements and physical samples analyzed by an off-Site laboratory for the five areas within the ARA-23 site—namely, the ARA-I facility, ARA-II facility, equipment washdown area, haul road and turnaround area, and the windblown area. The ARA-II facility area was further divided between that portion that was excavated to basalt and the portion of the area not excavated to basalt. The remedial action goal for Cs-137 at the ARA-23 site was 23 pCi/g. The 95% UCLs for each of the areas within ARA-23 were evaluated against the remedial action goal—as prescribed by the *Field Sampling Plan for the Waste Area Group 5, Remedial Action, Phase II* (DOE-ID 2003b)—and the results are summarized in Table 7-4. The data sets for the four COCs at the ARA-12 site were analyzed following EPA guidance provided in *Calculating Upper Confidence Limits for Exposure Point Concentrations at Hazardous Waste Sites* (EPA 2002). Although Cs-137 concentrations at the ARA-II area that was excavated to basalt exceed the 23-pCi/g remedial action goal, the remedial action is deemed successful in accordance with the remedy described in the *Record of Decision Power Burst Facility and Auxiliary Reactor Area, Operable Unit 5-12* (DOE-ID 2000a), which states that remediation is complete if the excavation reaches basalt or if soil concentrations are less than the remedial action goal. Based upon the comparison of the postremediation concentrations (i.e., 95% UCL) to the remediation goals, the remediation of the ARA-12 site is determined to be successful.

Table 7-4. ARA-23 data summary by area—95% upper confidence limit.

	Cs-137 Concentrations, pCi/g	
Area	In Situ	Confirmation Sample
ARA-I	8.5	22.3
ARA-II	8.6	11.1
ARA-II on basalt	52.1	83.8
Equipment washdown area	8.4	12.9
Haul road and turnaround area	7.4	9.5
Windblown area	9.3	9.6
Remediation goal, pCi/g	23	

Based on the comparison of the postremediation concentrations to the remediation goals, the remediation of the ARA-23 site is determined to be successful.

7.3.6 ARA-25: ARA-I Soil beneath the ARA-626 Hot Cells

For ARA-25, the contaminated soils were removed in accordance with the requirements of the *Record of Decision Power Burst Facility and Auxiliary Reactor Area, Operable Unit 5-12* (DOE-ID 2000a). In addition, the hot cell foundation was removed, allowing excavation of the underlying and immediately surrounding soils to basalt. In situ measurements of the basalt layer demonstrated that the maximum Cs-137 concentration remaining was 398 pCi/g, which exceeds the 23-pCi/g remediation goal at the 1E-04 human health risk concentration for the residential 100-year scenario decayed through the exposure period. As with the ARA-02 site, Cs-137 was used as a marker to calculate the concentrations of the remaining contaminants based on the ratio of their maximum concentrations to that of Cs-137, as obtained from Tables 13 and 14 in the OU 5-12 ROD (DOE-ID 2000a). The concentration of Cs-137 and those derived for the other COCs are provided in Table 7-5. Although the remaining contaminant concentrations exceed the remediation goal, it was stipulated in Section 8.6 of the OU 5-12

ROD (DOE-ID 2000a) that remediation goals can be satisfied by either cleaning up to the identified contaminant concentration or by removing all soil down to the basalt interface. Because the contaminated soils were removed down to the basalt interface, the remediation of the ARA-25 site is determined to be successful.

Table 7-5. ARA-25 contaminant concentrations.

Contaminant of Concern	Maximum Concentration prior to Remediation	Remediation Goal	Maximum Postremediation Concentration
Cs-137	449 pCi/g	23 pCi/g	398 pCi/g
Ra-226	29.7 pCi/g	1.2 or 2.1 pCi/g[a]	26.3 pCi/g
Arsenic	40.6 mg/kg	5.8 mg/kg	36.0 mg/kg
Lead	1,430 mg/kg	400 mg/kg	1,266 mg/kg
Copper	227 mg/kg	220 mg/kg	201 mg/kg

a. A goal of 2.1 pCi/g will be used for comparing sample results that may include interference from U-235; otherwise, a goal of 1.2 pCi/g will be used. Regardless of which remediation goal concentration is used for comparison, the postremediation concentration clearly exceeds either one.

7.3.7 PBF-37: Contaminated Soils beneath the PER-751 Pumphouse Floor Slab and Foundation

For PBF-37, contaminated soils were removed to mitigate the human health risk associated with Cs-137. The in situ gamma survey and laboratory analytical results demonstrated that the Cs-137 concentrations are less than 23 pCi/g with maximum concentrations of 2.8 and 2.29 pCi/g, respectively. Based upon the comparison of the postremediation concentrations to the 23-pCi/g remediation goal, the remediation of the PBF-37 site is determined to be successful.

7.4 Institutional Controls

The following subsections discuss the institutional control requirements for each site that underwent remediation in accordance with the OU 5-12 ROD (DOE-ID 2000a). In addition, institutional control requirements for the four inactive waste system sites that were closed as part of the Phase I activities are discussed as are any institutional control requirements pertaining to the PBF-37 contaminated soil site.

7.4.1 ARA-01: ARA-I Chemical Evaporation Pond

In accordance with the OU 5-12 ROD (DOE-ID 2000a), institutional controls will not be required at ARA-01 following remediation if the remedial action goals are achieved. Based upon the postremediation concentrations of the COCs being below the remediation goals, institutional controls at the ARA-01 site are not required.

7.4.2 ARA-02: ARA-I Sanitary Waste System

In accordance with the OU 5-12 ROD (DOE-ID 2000a), institutional controls will not be required at ARA-02 following remediation if all contaminated sludge is removed to basalt or if contaminant concentrations are comparable to local background values for soil. The remedial action was successful

in removing all the contaminated sludge. Furthermore, the postremediation concentrations of the COCs are below the remediation goal for the site. For the radionuclide contaminants, the remediation goal concentrations that are based on the 100-year scenario must be adjusted for decay to current day. Table 7-6 provides a comparison of the remediation goal concentrations adjusted for decay to existing concentrations of the radionuclide COCs.

Based upon the postremediation concentrations of the COCs being below both the remediation goals as well as the decay-corrected remediation goals, institutional controls at the ARA-02 site are not required. Areas of surficial soil contamination exist where the concentrations of Cs-137 are elevated. This contamination is attributed to ARA-23 and has been addressed under Phase II remedial activities.

7.4.3 ARA-12: ARA-III Radioactive Waste Leach Pond

In accordance with the OU 5-12 ROD (DOE-ID 2000a), institutional controls will not be required at ARA-12 following remediation if the remedial action goals for the COCs are achieved. For Ag-108m, this is dependant on the radionuclide concentrations meeting the criteria for free release given that the Ag-108m remediation goal concentration is based on the 100-year scenario.

Given the land-use assumption that institutional controls would be maintained until 2095 and the revised half-life for Ag-108m of 418 years, the soil concentration remediation goal of 0.75 pCi/g based upon the 100-year scenario would result in a concentration of 0.63 pCi/g to qualify for free release in the year 2004, calculated based upon the 418-year half-life. Because the 95% UCL concentration for Ag-108m of 0.4 pCi/g is below the free release criteria concentration of 0.64 pCi/g, and because the concentrations for the three metal COCs are below the remedial action goals, institutional controls are not required at the ARA-12 site.

7.4.4 ARA-16: ARA-I Radionuclide Tank

For ARA-16, the concentration of Cs-137 remaining in the soil at the basalt interface underlying the tank had a maximum concentration of 1.5 pCi/g. This is below the remediation goal of 23 pCi/g that equates to a current concentration of 2.3 pCi/g for Cs-137. Although it exceeds the 0.82-pCi/g background concentration, the requirement has been met to remove the soil to basalt. Given that fact, along with the remaining contamination being below the calculated current RBC (2.3 pCi/g), institutional controls at the ARA-16 site are not required. As with ARA-02, Cs-137 is present in surficial soil attributed to windblown contamination resulting from the SL-1 accident. This soil will be addressed as part of the Phase II remedial action for ARA-23 following the need for which institutional controls will be addressed.

7.4.5 ARA-23: Radiologically Contaminated Surface Soil and Subsurface Structures Associated with ARA-I and ARA-II

For ARA-23, although the remediation goals have been achieved, the goal is based upon the 100-year scenario. For free release, the Cs-137 concentration would be required to be below 2.3 pCi/g (0.833 for the logarithmic transformed data). The residual Cs-137 concentrations for the five areas within ARA-23 exceed this level; therefore, institutional controls will be required. As outlined in Table 3-2 of the *Operations and Maintenance Plan for Power Burst Facility and Auxiliary Reactor Area, Operable Unit 5-12* (DOE-ID 2000c), institutional controls at the ARA-23 site will consist of the following:

- Visible access restrictions—CERCLA sign
- Prevention of unauthorized access—INL security gate.

Table 7-6. ARA-02 decay-corrected remediation goals.

Contaminant of Concern	Remediation Goal	Decay-Corrected Remediation Goal	Postremediation Concentration
Cs-137	8.5 pCi/g	0.85 pCi/g	0.36 pCi/g
Ra-226	1.2 or 2.1 pCi/g	1.15 or 2.01 pCi/g[a]	0.18 pCi/g
U-235	6.2 pCi/g	6.2 pCi/g	0.24 pCi/g
U-238	10.6 pCi/g	10.6 pCi/g	0.38 pCi/g

a. A goal of 2.1 pCi/g will be used for comparing sample results that may include interference from U-235; otherwise, a goal of 1.2 pCi/g will be used. Since U-235 is present at this site, the use of the 2.1-pCi/g remediation goal would be appropriate even though the postremediation concentration is well below either of the two Ra-226 remediation goal concentrations.

7.4.6 ARA-25: ARA-I Soil beneath the ARA-626 Hot Cells

For ARA-25, soils were removed to basalt. However, the concentrations of most of the COCs were elevated above the remediation goals as well as the RBCs. Although the OU 5-12 ROD (DOE-ID 2000a) requirement has been met in terms of removing contaminated soils, contamination remains at the basalt interface. As such, institutional controls at the ARA-25 site will be required. As outlined in Table 3-2 of the *Operations and Maintenance Plan for Power Burst Facility and Auxiliary Reactor Area, Operable Unit 5-12* (DOE-ID 2000c), institutional controls at the ARA-25 site will consist of the following:

- Visible access restrictions—CERCLA sign
- Prevention of unauthorized access—INL security gate.

In addition, a monument will be installed marking the location of subsurface contamination remaining at the site.

7.4.7 Closure Sites

In accordance with the OU 5-12 ROD (DOE-ID 2000a), institutional controls would not be required at any of the four sites that were closed during the Phase I activities (i.e., ARA-07, ARA-08, ARA-13, and ARA-21). Based upon results of the closure activities and information presented in the *Waste Area Group 5 Operable Unit 5-12 Comprehensive Remedial Investigation/Feasibility Study* (Holdren et al. 1999), no evidence exists that would indicate institutional controls at any of these sites are warranted.

Based upon the analytical data obtained for ARA-13 and ARA-21 during Phase I, this determination holds true for these sites. However, based upon historical analytical data for the ARA-07 and ARA-08 sites, residual Cs-137 contamination exists that warrants institutional controls being established at these two sites. For ARA-07 and ARA-08, the historical Cs-137 maximum concentrations were 17.6 pCi/g and 11.6 pCi/g, respectively. These analyses were performed in June 1991; thus, the decay-corrected Cs-137 concentrations (to December 2004) for ARA-07 and ARA-08 are 12.9 pCi/g and 8.5 pCi/g, respectively. These concentrations exceed the current concentration of 2.3 pCi/g required for free release; therefore, institutional controls will be required. The institutional controls will consist of visible access restrictions (i.e., CERCLA signs) and prevention of unauthorized access (i.e., the INL security gate). The requirement for institutional controls at these two sites will be reviewed every 5 years.

7.4.8 PBF-37: Contaminated Soils beneath the PER-751 Pumphouse Floor Slab and Foundation

Based upon the in situ gamma spectroscopic data for Cs-137, a maximum concentration of 2.8 pCi/g was obtained that exceeds the 2.4 pCi/g required for free release. However, the maximum result from the laboratory analyses was 2.29 pCi/g, which is below this concentration. Based upon the laboratory analytical data and given that all other confirmation analytical results (both laboratory and in situ measurements) are below the 2.4-pCi/g requirement, institutional controls will not be required at this site.

7.4.9 Summary of Institutional Controls

Table 7-7 summarizes the institutional control requirements for those sites that have undergone remediation or closure as discussed herein. The table identifies each site and the COCs related to the placement of institutional controls. For sites where radionuclides are the only COCs remaining above the criteria required for free release, an estimated duration for institutional controls has been provided based upon the exponential nature of the radioactive decay. The DOE will be responsible for implementing the institutional controls with the INL contractor's Long-Term Stewardship organization having fiduciary responsibility for ensuring that those controls are maintained.

Table 7-7. Institutional controls summary.

Site	Contaminant(s) of Concern	Concentration	Institutional Controls	Estimated Duration[a]
ARA-01	—	—	Not required	—
ARA-02	—	—	Not required	—
ARA-07	Cs-137	17.6 pCi/g	• Visible access restrictions—CERCLA sign • Prevention of unauthorized access—INL security gate	June 2078
ARA-08	Cs-137	11.6 pCi/g	• Visible access restrictions—CERCLA sign • Prevention of unauthorized access—INL security gate	December 2059
ARA-12	—	—	Not required	—
ARA-13	—	—	Not required	—
ARA-16	—	—	Not required	—
ARA-21	—	—	Not required	—
ARA-23	Cs-137	83.8 pCi/g	• Visible access restrictions—CERCLA sign • Prevention of unauthorized access—INL security gate	155 years

Table 7-7. (continued).

Site	Contaminant(s) of Concern	Concentration	Institutional Controls	Estimated Duration[a]
ARA-25	Cs-137 Ra-226 Arsenic Copper Lead	398 pCi/g 26.3 pCi/g 36.0 mg/kg 201 mg/kg 1,266 mg/kg	• Visible access restrictions—CERCLA sign • Prevention of unauthorized access—INL security gate • Monument marking the location of subsurface contamination	To be determined
PBF-37	—	—	Not required	—

a. An estimated duration for institutional controls is provided for those sites where radionuclides are the only contaminants of concern remaining at concentrations above the free-release criteria. For sites having contaminants other than radionuclides (i.e., metals) remaining, the institutional controls will be maintained until discontinued based upon the results of a 5-year review.

ARA = Auxiliary Reactor Area
CERCLA = Comprehensive Environmental Response, Compensation, and Liability Act
INL = Idaho National Laboratory
PBF = Power Burst Facility

8. CERTIFICATION THAT THE REMEDY IS OPERATIONAL AND FUNCTIONAL

As stated in the OU 5-12 ROD (DOE-ID 2000a), the RAOs and the remedial action goals were established to reduce or eliminate the risk to human health and the environment. To ensure that current or future exposure to human health and the environment does not exceed the RAOs, access restrictions and institutional controls will be established for the ARA-07, ARA-08, ARA-23, ARA-25, and PBF-37 sites in accordance with the *Operations and Maintenance Plan for Power Burst Facility and Auxiliary Reactor Area, Operable Unit 5-12* (DOE-ID 2000c). Institutional controls will not be required for the ARA-01, ARA-02, ARA-13, ARA-16, ARA-21, or PBF-16 sites.

Hazardous substances will remain at various WAG 5 sites above levels that allow unlimited use and unrestricted exposure after the completion of the remedial action. Pursuant to CERCLA Section 121(c) and as provided in the current guidance on 5-year reviews—*Structure and Components of Five-Year Reviews* (EPA 1991), *Supplemental Five-Year Review Guidance* (EPA 1994b), and the *Second Supplemental Five-Year Review Guidance* (EPA 1995)—the EPA must conduct a statutory 5-year review. The DOE has the duty and authority by law to conduct 5-year reviews at the INL, since this was delegated to DOE for the INL under Section 2(d) of Executive Order 12580, pursuant to the President's authority to delegate, conferred by Section 115 of CERCLA. Furthermore, the "National Oil and Hazardous Substances Pollution Contingency Plan" (40 CFR 300), as promulgated in the *Code of Federal Regulations*, recognizes by 40 CFR 300.5 that DOE will be the lead agency for the INL with regard to conducting 5-year reviews. While the responsibility and authority for conducting 5-year reviews lie with DOE, the EPA retains authority over whether the 5-year review adequately addresses the protectiveness of the remedies. The *Federal Facility Agreement and Consent Order for the Idaho National Engineering Laboratory* (DOE-ID 1991) specifies that the EPA may review response actions and, with consultation from the DEQ, determine whether additional action is required by DOE. Final authority and acceptance of the 5-year review are at the EPA's discretion.

This report certifies that the remedies selected in the *Record of Decision Power Burst Facility and Auxiliary Reactor Area, Operable Unit 5-12* (DOE-ID 2000a) and detailed in the *Waste Area Group 5 Remedial Design/Remedial Action Work Plan, Phase 1* (DOE-ID 2001) and the *Remedial Design/Remedial Action Work Plan, Phase II, for Waste Area Group 5* (DOE-ID 2003a) have been completed and the remedies are operational and functional. Institutional controls and operations and maintenance of the remedial action sites will be implemented as outlined in the *Operations and Maintenance Plan for Power Burst Facility and Auxiliary Reactor Area, Operable Unit 5-12* (DOE-ID 2000c) to ensure that the remedies remain protective of human health and the environment.

9. CONTACT INFORMATION

The Phase I remedial action was performed by the primary contractor at the INL (Bechtel BWXT Idaho, LLC) operating under DOE-ID Contract DE-AC07-99ID13727. The potentially responsible parties used the following contractor for the Phase II remedial action:

Primary Contact Name and Title:	Randall A. Haws, Project Manager
Company Name:	S.M. Stoller Corporation
Address:	1780 E. 1st Street Idaho Falls, ID 83401
Phone Number:	(208) 525-9358

The following laboratories provided analytical services for the potentially responsible parties:

Company Name:	Analytical Laboratories Department Idaho National Laboratory Test Reactor Area
Address:	P.O. Box 1625 Scoville, ID 83415
Phone Number:	(208) 526-1000
Company Name:	General Engineering Laboratories, LLC
Address:	2040 Savage Road Charleston, SC 29407
Phone Number:	(843) 556-8171
Company Name:	INTEC Analytical Chemistry Laboratory Analytical Laboratories Department
Address:	P.O. Box 1625 Scoville, ID 83415
Phone Number:	(208) 526-1000
Company Name:	Paragon Analytics, Inc.
Address:	225 Commerce Dr. Fort Collins, CO 80524
Phone Number:	(970) 224-2559
Company Name:	Quanterra Incorporated, St. Louis
Address:	13715 Rider Trail North Earth City, MO 63045
Phone Number:	(314) 298-8566
Company Name:	Pace Analytical Services, Inc. formerly Southwest Laboratory of Oklahoma, Inc. (now closed)
Address:	1700 West Albany Broken Arrow, OK 74012
Phone Number:	(918) 251-2858
Company Name:	Southwest Research Institute
Address:	6220 Culebra Road San Antonio, TX 78238
Phone Number:	(210) 522-5428

Company Name:	STL Knoxville
Address:	5815 Middlebrook Pike Knoxville, TN 37921-5947
Phone Number:	(865) 291-3000

Company Name:	STL St. Louis (formerly Quanterra)
Address:	13715 Rider Trail North Earth City, MO 63045
Phone Number:	(314) 298-8566

The project manager for the potentially responsible parties was:

Name:	Andrew R. Baumer
Company Name:	Bechtel BWXT Idaho, LLC
Address:	P. O. Box 1625, MS 8101 Idaho Falls, ID 83415-8101
Phone Number:	(208) 526-3238

The project manager for the DOE-ID was:

Name:	R. Mark Shaw
Organization:	U.S. Department of Energy Idaho Operations Office
Address:	P.O. Box 1625, MS 1222 Idaho Falls, ID 83415-1222
Phone Number:	(208) 526-6442

The project manager for the EPA was:

Name:	Matt Wilkening
Organization:	U.S. Environmental Protection Agency Region 10
Address:	1435 North Orchard St. Boise, ID 83706
Phone Number:	(208) 378-5760

The project manager for the DEQ was:

Name:	Ted Livieratos
Organization:	Idaho Department of Environmental Quality
Address:	1410 N. Hilton Boise, ID 83706
Phone Number:	(208) 373-0217

10. REFERENCES

29 CFR 1910.95, 2005, "Occupational Noise Exposure," *Code of Federal Regulations*, Office of the Federal Register, March 2005.

29 CFR 1910.120, 2005, "Hazardous Waste Operations and Emergency Response," *Code of Federal Regulations*, Office of the Federal Register, March 2005.

29 CFR 1926.65, 2005, "Hazardous Waste Operations and Emergency Response," *Code of Federal Regulations*, Office of the Federal Register, March 2005.

40 CFR 264, Subpart I, 2005, "Use and Management of Containers," *Code of Federal Regulations*, Office of the Federal Register, March 2005.

40 CFR 268.40, 2005, "Applicability of Treatment Standards," *Code of Federal Regulations*, Office of the Federal Register, February 2005.

40 CFR 300, 2005, "National Oil and Hazardous Substances Pollution Contingency Plan," *Code of Federal Regulations*, Office of the Federal Register, May 2005.

40 CFR 300.5, 2005, "Definitions," *Code of Federal Regulations*, Office of the Federal Register, May 2005.

15 USC § 2601 et seq., 1976, "The Toxic Substances Control Act (TSCA) of 1976," *United States Code.*

42 USC § 4321 et seq., 1970, "National Environmental Policy Act," *United States Code,* January 1, 1970.

42 USC § 6901 et seq., 1976, "Resource Conservation and Recovery Act (Solid Waste Disposal Act)," *United States Code,* October 21, 1976.

42 USC § 9601 et seq., 1980, "Comprehensive Environmental Response, Compensation and Liability Act of 1980 (CERCLA/Superfund)," *United States Code,* December 11, 1980.

Burns, D. E., 1995, *Guidance Protocol for the Performance of Cumulative Risk Assessments at the INEL*, INEL-95/131, Rev. 0, Idaho National Engineering Laboratory, May 1995.

DOE-ID, 1991, *Federal Facility Agreement and Consent Order for the Idaho National Engineering Laboratory,* Administrative Docket No. 1088-06-29-120, U.S. Department of Energy Idaho Operations Office; U.S. Environmental Protection Agency, Region 10; Idaho Department of Health and Welfare, December 4, 1991.

DOE-ID, 1996, *Record of Decision Stationary Low-Power Reactor-1 and Boiling Water Reactor Experiment-I Burial Grounds (Operable Units 5-05 and 6-01), and 10 No Action Sites (Operable Units 5-01, 5-03, 5-04, and 5-11)*, INEL-95/0282, Rev. 0, U.S. Department of Energy Idaho Operations Office; U.S. Environmental Protection Agency, Region 10; and Idaho Department of Health and Welfare, January 1996.

DOE-ID, 1997, *Final Work Plan for Waste Area Group 5 Operable Unit 5-12 Comprehensive Remedial Investigation/Feasibility Study*, DOE/ID-10555, Rev. 0, U.S. Department of Energy Idaho Operations Office, May 1997.

DOE-ID, 2000a, *Record of Decision Power Burst Facility and Auxiliary Reactor Area, Operable Unit 5-12*, DOE/ID-10700, Rev. 0, U.S. Department of Energy Idaho Operations Office, January 2000.

DOE-ID, 2000b, *Field Sampling Plan for the Waste Area Group 5 Remedial Action, Phase 1*, DOE/ID-10758, Rev. 0, U.S. Department of Energy Idaho Operations Office, June 2000.

DOE-ID, 2000c, *Operations and Maintenance Plan for Power Burst Facility and Auxiliary Reactor Area, Operable Unit 5-12,* DOE/ID-10805, Rev. 0, U.S. Department of Energy Idaho Operations Office, December 2000.

DOE-ID, 2000d, *Waste Area Group 5 Remedial Design/Remedial Action Work Plan Phase 1*, DOE/ID-10761, Rev. 0, U.S. Department of Energy Idaho Operations Office, June 2000.

DOE-ID, 2001, *Waste Area Group 5 Remedial Design/Remedial Action Work Plan, Phase 1*, DOE/ID-10761, Rev. 1, U.S. Department of Energy Idaho Operations Office, June 2001.

DOE-ID, 2002, *Remedial Action Report for WAG 5, OU 5-12 Phase I Remedial Action; Sites ARA-02, ARA-16, ARA-25, and Inactive Waste System Sites ARA-07, ARA-08, ARA-13, and ARA-21*, DOE/ID-10954, Rev. 0, U.S. Department of Energy Idaho Operations Office, January 2002.

DOE-ID, 2003a, *Remedial Design/Remedial Action Work Plan, Phase II, for Waste Area Group 5,* DOE/ID-10798, Rev. 1, U.S. Department of Energy Idaho Operations Office, April 2003.

DOE-ID, 2003b, *Field Sampling Plan for the Waste Area Group 5, Remedial Action, Phase II,* DOE/ID-10808, Rev. 1, U.S. Department of Energy Idaho Operations Office, April 2003.

DOE-ID, 2004a, *Quality Assurance Project Plan for Waste Area Groups 1, 2, 3, 4, 5, 6, 7, 10, and Deactivation, Decontamination, and Decommissioning,* DOE/ID-10587, Rev. 8, U.S. Department of Energy Idaho Operations Office, March 2004.

DOE-ID, 2004b, *Groundwater Monitoring Plan for the Waste Area Group 5 Remedial Action,* DOE/ID-10779, Rev. 2, U.S. Department of Energy Idaho Operations Office, September 2004.

DOE-ID, 2004c, *Field Sampling Plan for Waste Reduction Operations Complex/Power Burst Facility Buildings, Structures, and Tanks,* DOE/ID-11104, Rev. 7, U.S. Department of Energy Idaho Operations Office, November 2004.

DOE-ID, 2005a, *Explanation of Significant Differences for the Record of Decision for the Power Burst Facility and Auxiliary Reactor Area Operable Unit 5-12*, DOE/ID-11017, Rev. 0, U.S. Department of Energy Idaho Operations Office, January 2005.

DOE-ID, 2005b, *Idaho National Engineering and Environmental Laboratory Waste Acceptance Criteria*, DOE/ID-10381, Rev. 21, U.S. Department of Energy Idaho Operations Office, January 2005.

DOE-ID, 2005c, *Waste Acceptance Criteria for ICDF Landfill,* DOE/ID-10865, Rev. 8, U.S. Department of Energy Idaho Operations Office, February 2005.

EDF-3077, 2005, "Risk-Based Approach for Management of PCB Remediation Waste from the V-Tanks," Rev. 2, Idaho Completion Project, January 2005.

EPA, 1991, *Structure and Components of Five-Year Reviews*, OSWER Directive 9355.7-02, U.S. Environmental Protection Agency, May 23, 1991.

EPA, 1994a, *Guidance for the Data Quality Objectives Process*, EPA QA/G-4, EPA/6001R-96/055, U.S. Environmental Protection Agency, September 1994.

EPA, 1994b, *Supplemental Five-Year Review Guidance*, OSWER Directive 9355.7-02A, U.S. Environmental Protection Agency, July 26, 1994.

EPA, 1995, *Second Supplemental Five-Year Review Guidance*, OSWER Directive 9355.7-03A, U.S. Environmental Protection Agency, December 21, 1995.

EPA, 2002, *Calculating Upper Confidence Limits for Exposure Point Concentrations at Hazardous Waste Sites*, OSWER 9285.6-10, U.S. Environmental Protection Agency Office of Emergency and Remedial Response, December 2002.

EPA, 2004, "ProUCL Version 3.0 User Guide," EPA/600/R04/079, U.S. Environmental Protection Agency, April 2004.

Form 435.36, 2004, "New Site Identification (NSI)," Rev. 5, Idaho National Engineering and Environmental, April 2004.

Fromm, J., 1996, Idaho Department of Environmental Quality, Letter to Waste Area Group Managers and Technical Support Staff, "Radionuclide Risk-Based Concentration Tables."

Giles, J. R., 1999, *Extent of Silver-108m Contamination at the ARA-III Radioactive Waste Leach Pond CERCLA Site ARA-12*, INEEL/EXT-99-01241, EDF-ER-103, Rev. 0, Idaho National Engineering and Environmental Laboratory, December 1999.

Hillman-Mason, K. Y., K. J. Poor, D. W. Lodman, and S. D. Dunstan, 1994, *Preliminary Scoping Track 2 Summary Report for Operable Unit 5-08 and 5-09*, INEL-94/0108, Rev. 0, Idaho National Engineering and Environmental Laboratory, October 1994.

Holdren, K. J., C. M. Hiaring, D. E. Burns, N. L. Hampton, B. J. Broomfield, E. R. Neher, R. L. Van Horn, I. E., Stepan, R. P. Wells, R. L. Chambers, L. Schmeising, and R. Henry, 1999, *Waste Area Group 5 Operable Unit 5-12 Comprehensive Remedial Investigation/Feasibility Study,* DOE/ID-10607, Rev. 0, U.S. Department of Energy Idaho Operations Office, January 1999.

IDAPA 58.01.03.007, 1990, "Septic Tanks Design and Construction Standards," Idaho Administrative Procedures Act, Idaho Department of Environmental Quality, October 1990.

INEEL, 1999, *Final Report of the Decontamination and Dismantlement of the Auxiliary Reactor Area II Facility*, INEEL/EXT-99-00905, Rev. 0, Idaho National Engineering and Environmental Laboratory, September 1999.

INEEL, 2000, *Field Sampling Plan for the PBF-16 (SPERT-II) Leach Pond,* INEEL/EXT-2000-00396, Rev. 0, Idaho National Engineering and Environmental Laboratory, June 2000.

INEEL, 2003a, *Health and Safety Plan for Operable Unit 5-12 Remedial Design/Remedial Action Projects,* INEEL/EXT-2000-00515, Rev. 2, Idaho National Engineering and Environmental Laboratory, April 2003.

INEEL, 2003b, *Health and Safety Plan for Deactivation, Decontamination, and Decommissioning Projects with CERCLA, RCRA Closure, or VCO Activities*, INEEL/EXT-03-01066, Rev. 0, Idaho National Engineering and Environmental Laboratory, October 2003.

INEL, 1991, *Closure Plan for the ARA-III ARA-740 Sanitary Sewer Leach Field (COCA Unit ARA-13)*, EGG-WM-9471, Rev. 0, Idaho National Engineering Laboratory, March 1991.

INEL, 1996, *Background Dose Equivalent Rates and Surficial Soil Metal and Radionuclide Concentrations for the Idaho National Engineering Laboratory*, INEL-94/0250, Rev. 1, Idaho National Engineering Laboratory, August 1996.

Jorgensen, D. K., 1995, *ARA Windblown Area Risk Evaluation*, ER-WAG5-54, Rev. 2, Idaho National Engineering Laboratory, September 1995.

ORTEC, 1999, *User's Manual for the ISO-CART System*.

Parsons, 1999, "Idaho National Engineering and Environmental Laboratory Hazardous Waste Determination Record for the ARA-I Building, ARA-626 Hot Cells 1 and 2, Concrete Floors and Soils Beneath the Floors, April 22, 1999," Parsons Infrastructure and Technologies Group, Inc.

Pickett, S. L., K. J. Poor, P. E. Seccomb, and S. N. Stanisich, 1993, *Track 2 Summary Report for Operable Unit 5-07: ARA-I Sites ARA-02 and ARA-03*, EGG-ER-10593, Rev. 0, Idaho National Engineering Laboratory, May 1993.

Pickett, S. L., K. J. Poor, R. W. Rice, and P. E. Seccomb, 1994, *Track 2 Summary Report for Operable Unit 5-06: ARA-III Site ARA-12 and ARA-IV Site ARA-20*, EGG-ER-11144, Rev. 0, Idaho National Engineering Laboratory, June 1994.

PRD-183, 2005, "Radiological Control Manual," Rev. 8, Idaho Completion Project, March 2005.

Rose, Keith, U.S. Environmental Protection Agency, May 6, 1999, "hwd and data-reply," e-mail to distribution.

Rose, Keith, U.S. Environmental Protection Agency, May 6, 1999, e-mail to distribution, "hwd and data-reply."

Stanisich, S. N., K. J. Poor, M. J. Spry, G. A. Barry, and D. W. Lodman, 1992, *Final Remedial Investigation Report for the ARA Chemical Evaporation Pond (Operable Unit 5-10),* EGG-WM-10001, Rev. 0, Idaho National Engineering Laboratory, June 1992.

STD-101, 2004, "Integrated Work Control Process," Rev. 16, *Manual 6–Maintenance*, Idaho Completion Project, August 2004.

Appendix A

Waste Area Group 5 Phase I
As-Built Drawings

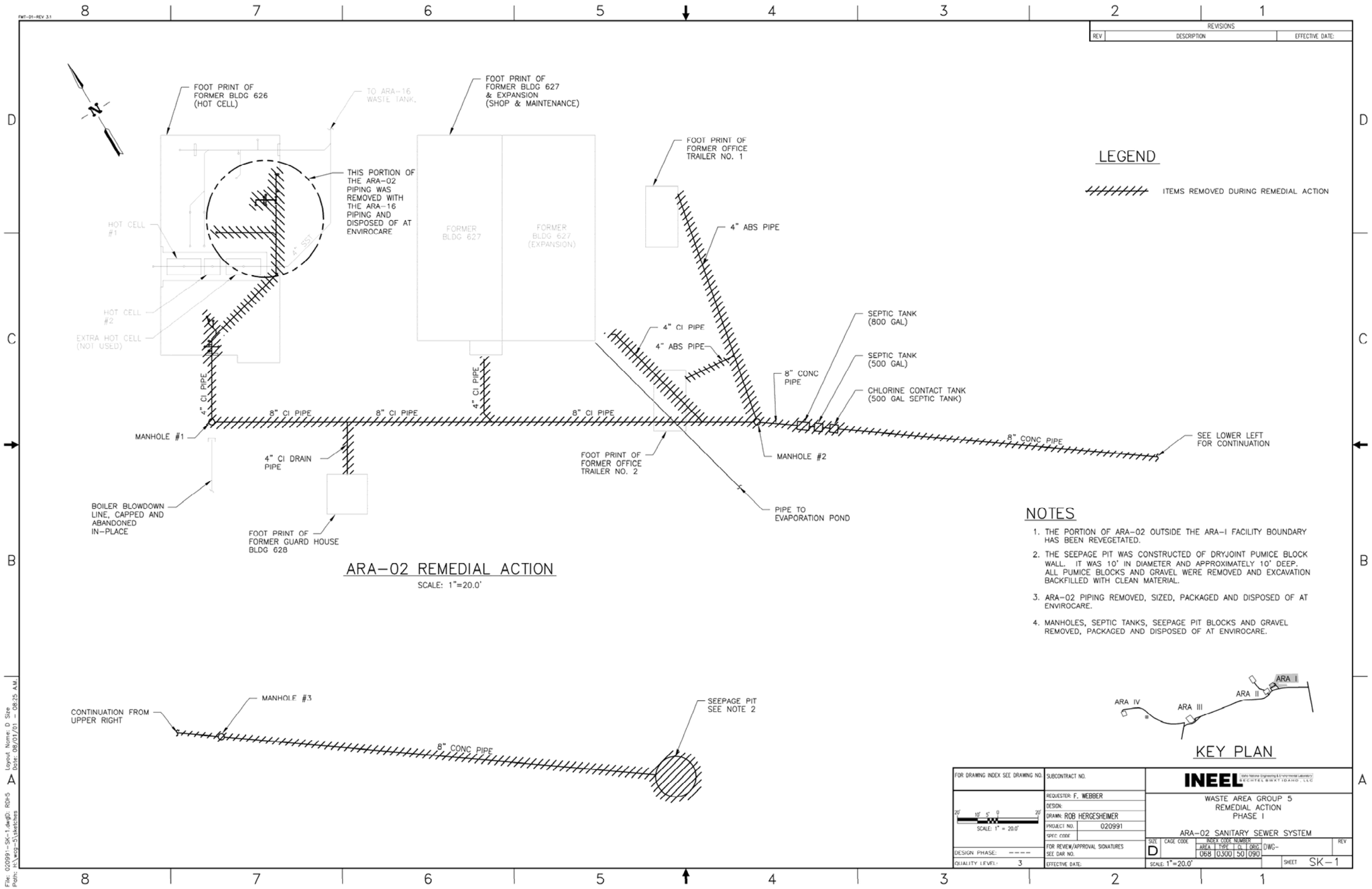

FOOT PRINT OF FORMER BLDG 626 (HOT CELL)
TO ARA-16 WASTE TANK.
FOOT PRINT OF FORMER BLDG 627 & EXPANSION (SHOP & MAINTENANCE)
THIS PORTION OF THE ARA-02 PIPING WAS REMOVED WITH THE ARA-16 PIPING AND DISPOSED OF AT ENVIROCARE
HOT CELL #1
HOT CELL #2
EXTRA HOT CELL (NOT USED)
FORMER BLDG 627
FORMER BLDG 627 (EXPANSION)
FOOT PRINT OF FORMER OFFICE TRAILER NO. 1
4" ABS PIPE
4" CI PIPE
4" ABS PIPE
SEPTIC TANK (800 GAL)
SEPTIC TANK (500 GAL)
CHLORINE CONTACT TANK (500 GAL SEPTIC TANK)
8" CONC PIPE
8" CI PIPE
MANHOLE #1
4" CI DRAIN PIPE
FOOT PRINT OF FORMER OFFICE TRAILER NO. 2
MANHOLE #2
SEE LOWER LEFT FOR CONTINUATION
BOILER BLOWDOWN LINE, CAPPED AND ABANDONED IN-PLACE
FOOT PRINT OF FORMER GUARD HOUSE BLDG 628
PIPE TO EVAPORATION POND
ARA-02 REMEDIAL ACTION
SCALE: 1"=20.0'
LEGEND
ITEMS REMOVED DURING REMEDIAL ACTION
NOTES
1. THE PORTION OF ARA-02 OUTSIDE THE ARA-I FACILITY BOUNDARY HAS BEEN REVEGETATED.
2. THE SEEPAGE PIT WAS CONSTRUCTED OF DRYJOINT PUMICE BLOCK WALL. IT WAS 10' IN DIAMETER AND APPROXIMATELY 10' DEEP. ALL PUMICE BLOCKS AND GRAVEL WERE REMOVED AND EXCAVATION BACKFILLED WITH CLEAN MATERIAL.
3. ARA-02 PIPING REMOVED, SIZED, PACKAGED AND DISPOSED OF AT ENVIROCARE.
4. MANHOLES, SEPTIC TANKS, SEEPAGE PIT BLOCKS AND GRAVEL REMOVED, PACKAGED AND DISPOSED OF AT ENVIROCARE.
CONTINUATION FROM UPPER RIGHT
MANHOLE #3
8" CONC PIPE
SEEPAGE PIT SEE NOTE 2
ARA I
ARA II
ARA III
ARA IV
KEY PLAN
REVISIONS
REV
DESCRIPTION
EFFECTIVE DATE:
FOR DRAWING INDEX SEE DRAWING NO.
SUBCONTRACT NO.
REQUESTER: F. WEBBER
DESIGN:
DRAWN: ROB HERGESHEIMER
PROJECT NO. 020991
SPEC CODE
FOR REVIEW/APPROVAL SIGNATURES SEE DAR NO.
EFFECTIVE DATE:
SCALE: 1" = 20.0'
DESIGN PHASE: ----
QUALITY LEVEL: 3
INEEL
WASTE AREA GROUP 5
REMEDIAL ACTION
PHASE I
ARA-02 SANITARY SEWER SYSTEM
SIZE D
CAGE CODE
INDEX CODE NUMBER
AREA TYPE CL ORIG
068 0300 50 090
DWG-
REV
SCALE: 1"=20.0'
SHEET SK-1

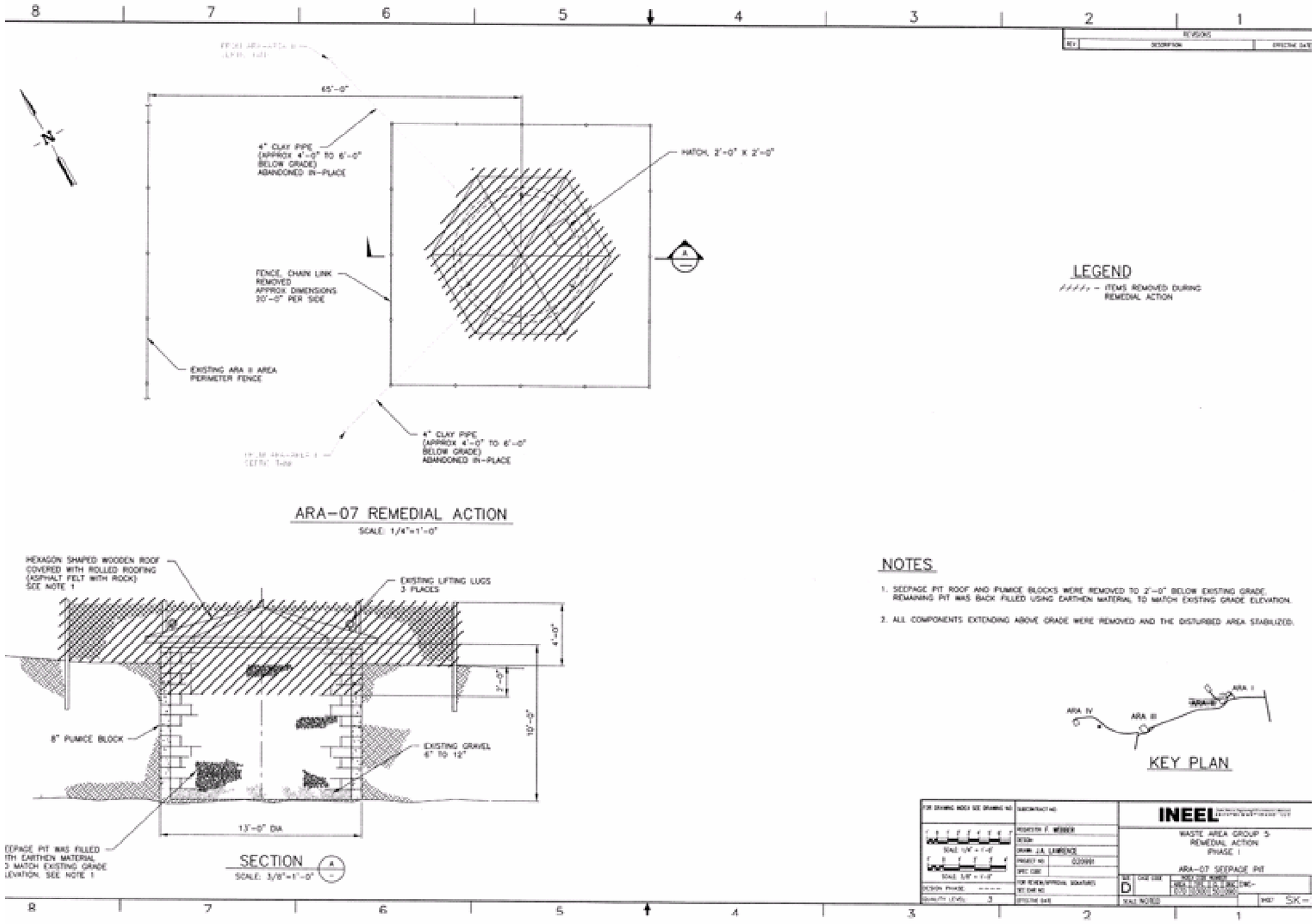

65'-0"
4" CLAY PIPE (APPROX 4'-0" TO 6'-0" BELOW GRADE) ABANDONED IN-PLACE
HATCH, 2'-0" X 2'-0"
FENCE, CHAIN LINK REMOVED APPROX DIMENSIONS 30'-0" PER SIDE
EXISTING ARA II AREA PERIMETER FENCE
4" CLAY PIPE (APPROX 4'-0" TO 6'-0" BELOW GRADE) ABANDONED IN-PLACE
ARA-07 REMEDIAL ACTION
SCALE: 1/4"=1'-0"
HEXAGON SHAPED WOODEN ROOF COVERED WITH ROLLED ROOFING (ASPHALT FELT WITH ROCK) SEE NOTE 1
EXISTING LIFTING LUGS 3 PLACES
4'-0"
3'-0"
10'-0"
8" PUMICE BLOCK
EXISTING GRAVEL 6" TO 12"
13'-0" DIA
SEEPAGE PIT WAS FILLED WITH EARTHEN MATERIAL 3 MATCH EXISTING GRADE ELEVATION. SEE NOTE 1
SECTION
SCALE: 3/8"=1'-0"
LEGEND
ITEMS REMOVED DURING REMEDIAL ACTION
NOTES
1. SEEPAGE PIT ROOF AND PUMICE BLOCKS WERE REMOVED TO 2'-0" BELOW EXISTING GRADE. REMAINING PIT WAS BACK FILLED USING EARTHEN MATERIAL TO MATCH EXISTING GRADE ELEVATION.
2. ALL COMPONENTS EXTENDING ABOVE GRADE WERE REMOVED AND THE DISTURBED AREA STABILIZED.
ARA IV
ARA III
ARA II
ARA I
KEY PLAN
INEEL
WASTE AREA GROUP 5
REMEDIAL ACTION
PHASE I
ARA-07 SEEPAGE PIT
D
SK-

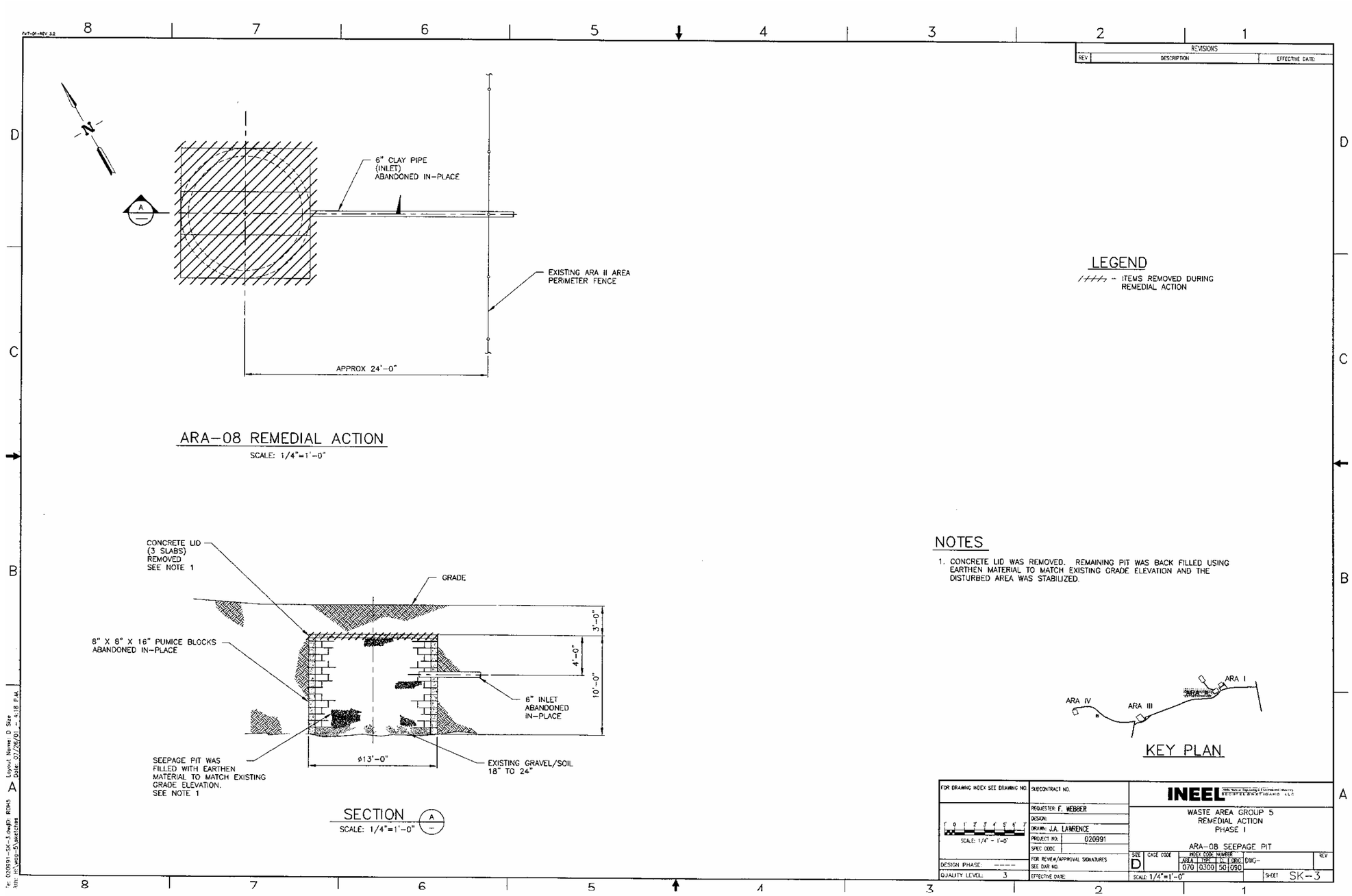

6" CLAY PIPE (INLET) ABANDONED IN-PLACE
EXISTING ARA II AREA PERIMETER FENCE
APPROX 24'-0"
ARA-08 REMEDIAL ACTION
SCALE: 1/4"=1'-0"
CONCRETE LID (3 SLABS) REMOVED SEE NOTE 1
GRADE
8" X 8" X 16" PUMICE BLOCKS ABANDONED IN-PLACE
6" INLET ABANDONED IN-PLACE
3'-0"
4'-0"
10'-0"
ø13'-0"
SEEPAGE PIT WAS FILLED WITH EARTHEN MATERIAL TO MATCH EXISTING GRADE ELEVATION. SEE NOTE 1
EXISTING GRAVEL/SOIL 18" TO 24"
SECTION A
SCALE: 1/4"=1'-0"
LEGEND
ITEMS REMOVED DURING REMEDIAL ACTION
NOTES
1. CONCRETE LID WAS REMOVED. REMAINING PIT WAS BACK FILLED USING EARTHEN MATERIAL TO MATCH EXISTING GRADE ELEVATION AND THE DISTURBED AREA WAS STABILIZED.
ARA I
ARA II
ARA III
ARA IV
KEY PLAN
REVISIONS
REV
DESCRIPTION
EFFECTIVE DATE
FOR DRAWING INDEX SEE DRAWING NO.
SUBCONTRACT NO.
REQUESTER: F. WEBBER
DESIGN:
DRAWN: J.A. LAWRENCE
PROJECT NO. 020991
SPEC CODE
FOR REVIEW/APPROVAL SIGNATURES SEE DAR NO.
EFFECTIVE DATE:
SCALE: 1/4" = 1'-0"
DESIGN PHASE: ----
QUALITY LEVEL: 3
INEEL
WASTE AREA GROUP 5
REMEDIAL ACTION
PHASE I
ARA-08 SEEPAGE PIT
SIZE D
CAGE CODE
INDEX CODE NUMBER
AREA 070 TYPE 0300 C. 50 DRG 090
DWG-
REV
SCALE: 1/4"=1'-0"
SHEET SK-3

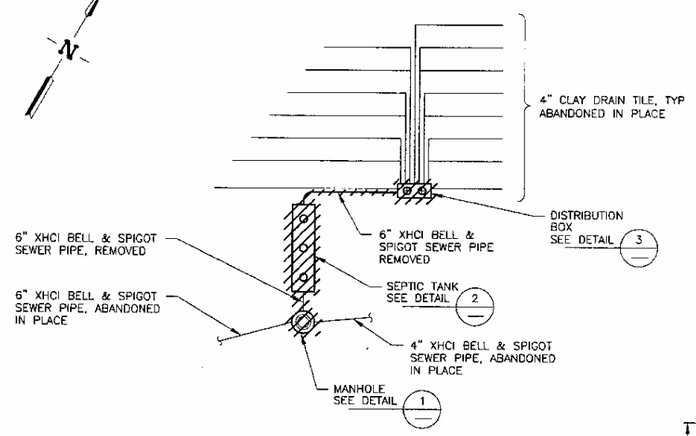

ARA-13 REMEDIAL ACTION

SCALE: 1/8"=1'-0"

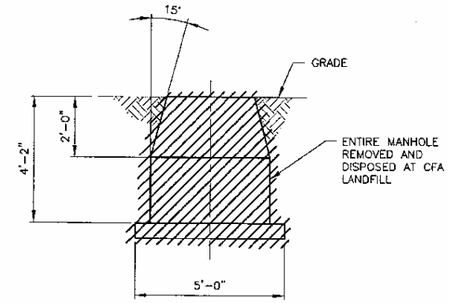

MANHOLE DETAIL 1

SCALE: 1/2"=1'-0"

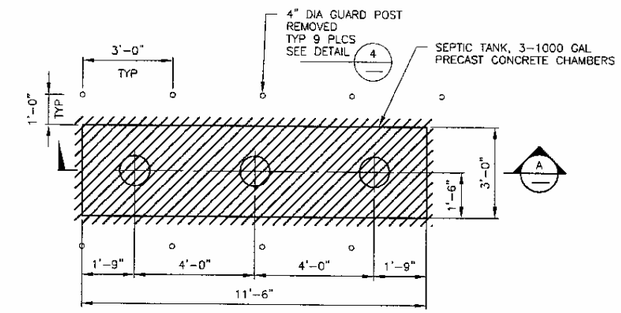

SEPTIC TANK DETAIL 2

SCALE: 1/4"=1'-0"

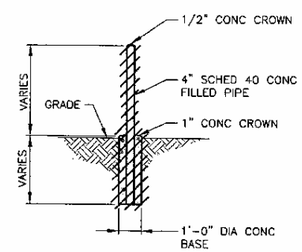

GUARD POST DETAIL 4

NTS

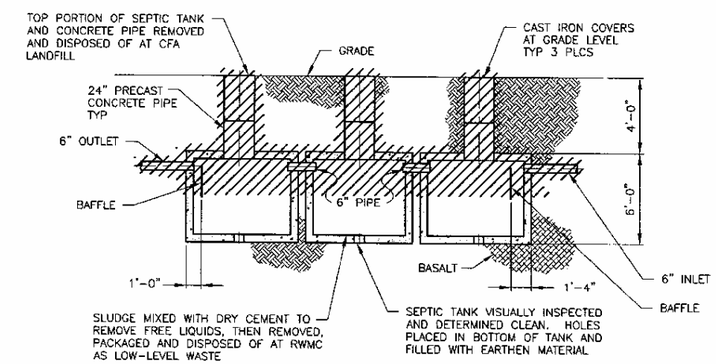

SECTION A

SCALE: 1/4"=1'-0"

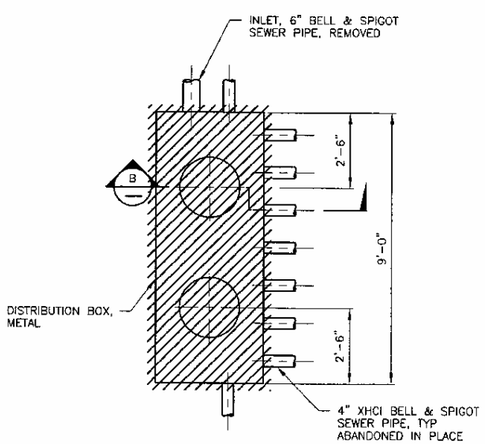

DISTRIBUTION BOX DETAIL 3

SCALE: 1/2"=1'-0"

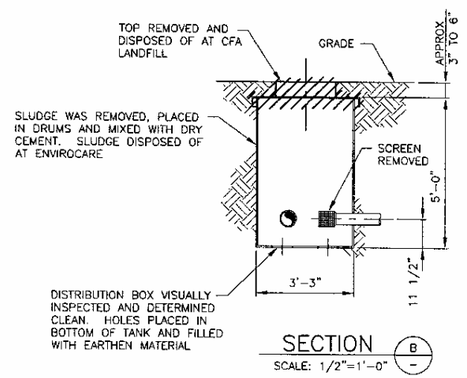

SECTION B

SCALE: 1/2"=1'-0"

NOTES

1. DISTURBED AREAS SHALL BE RESEEDED IN THE LATE FALL OF 2001.

LEGEND

ITEMS REMOVED DURING REMEDIAL ACTION

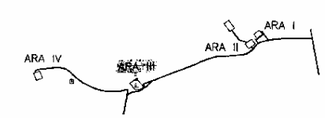

KEY PLAN

FOR DRAWING INDEX SEE DRAWING NO.	SUBCONTRACT NO.	INEEL — WASTE AREA GROUP 5 REMEDIAL ACTION PHASE I
SCALE: 1/4" = 1'-0" / SCALE: 1/2" = 1'-0"	REQUESTER: F. WEBBER	ARA-13 SEWER SYSTEM SECTIONS & DETAILS
	DESIGN:	
	DRAWN: ROB HERGESHEIMER	
	PROJECT NO. 020991	
	SPEC CODE	
DESIGN PHASE: ----	FOR REVIEW/APPROVAL SIGNATURES SEE DAR NO.	SIZE D; CADD CODE; INDEX CODE NUMBER: AREA 1 TYPE 063, CL 0300, OPC 50, 090; DWG-
QUALITY LEVEL: 3	EFFECTIVE DATE:	SCALE: NOTED; SHEET SK-4

REVISIONS

REV	DESCRIPTION	EFFECTIVE DATE

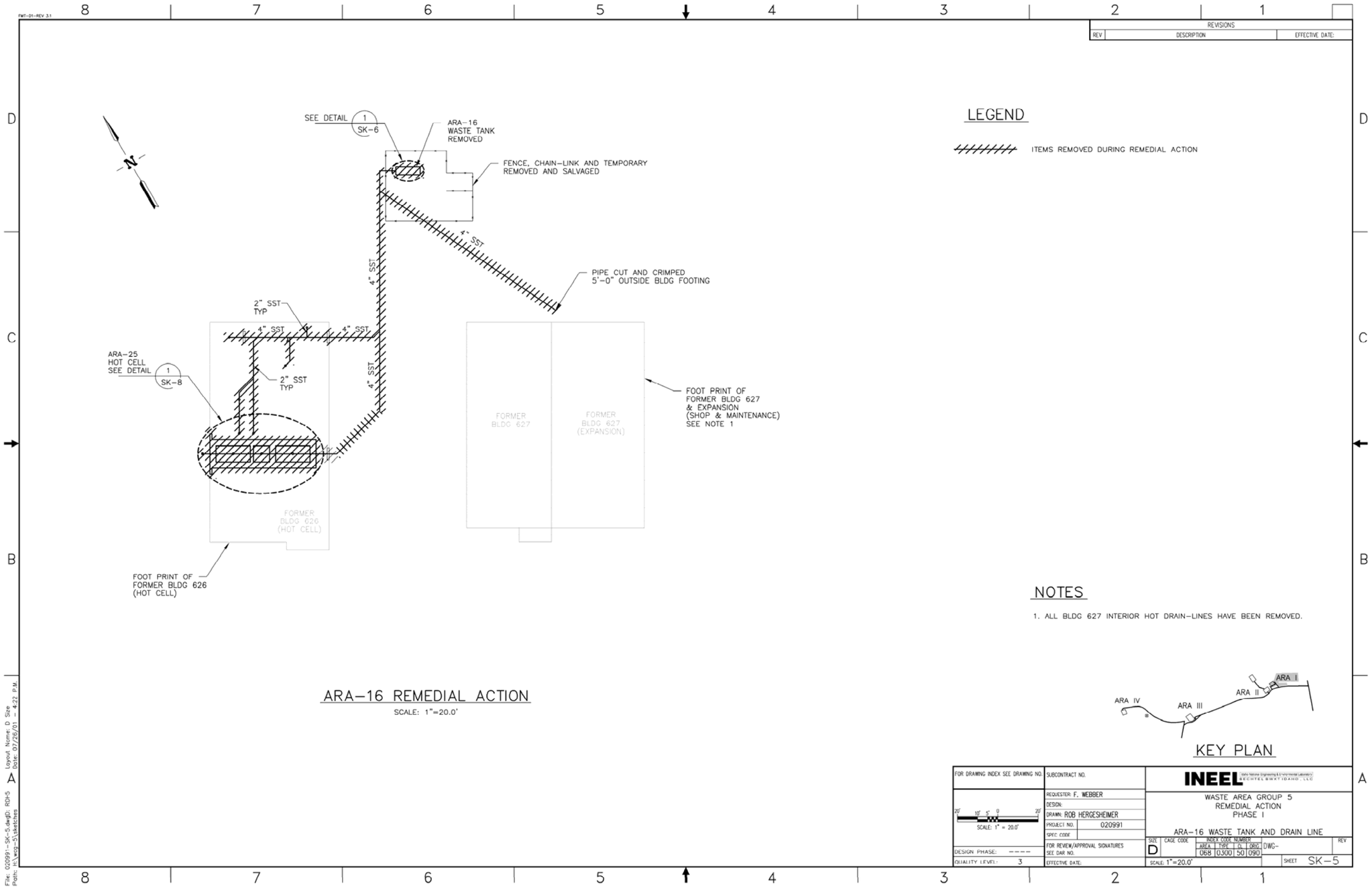

REVISIONS
REV
DESCRIPTION
EFFECTIVE DATE:
LEGEND
ITEMS REMOVED DURING REMEDIAL ACTION
SEE DETAIL 1 SK-6
ARA-16 WASTE TANK REMOVED
FENCE, CHAIN-LINK AND TEMPORARY REMOVED AND SALVAGED
4" SST
PIPE CUT AND CRIMPED 5'-0" OUTSIDE BLDG FOOTING
2" SST TYP
ARA-25 HOT CELL SEE DETAIL 1 SK-8
FOOT PRINT OF FORMER BLDG 627 & EXPANSION (SHOP & MAINTENANCE) SEE NOTE 1
FORMER BLDG 627
FORMER BLDG 627 (EXPANSION)
FORMER BLDG 626 (HOT CELL)
FOOT PRINT OF FORMER BLDG 626 (HOT CELL)
NOTES
1. ALL BLDG 627 INTERIOR HOT DRAIN-LINES HAVE BEEN REMOVED.
ARA-16 REMEDIAL ACTION
SCALE: 1"=20.0'
ARA I
ARA II
ARA III
ARA IV
KEY PLAN
FOR DRAWING INDEX SEE DRAWING NO.
SUBCONTRACT NO.
INEEL
REQUESTER: F. WEBBER
DESIGN:
DRAWN: ROB HERGESHEIMER
PROJECT NO. 020991
SPEC CODE
FOR REVIEW/APPROVAL SIGNATURES SEE DAR NO.
EFFECTIVE DATE:
SCALE: 1" = 20.0'
DESIGN PHASE: ----
QUALITY LEVEL: 3
WASTE AREA GROUP 5
REMEDIAL ACTION
PHASE I
ARA-16 WASTE TANK AND DRAIN LINE
SIZE D
CAGE CODE
INDEX CODE NUMBER
AREA 068
TYPE 0300
CL 50
ORIG 090
DWG-
REV
SCALE: 1"=20.0'
SHEET SK-5

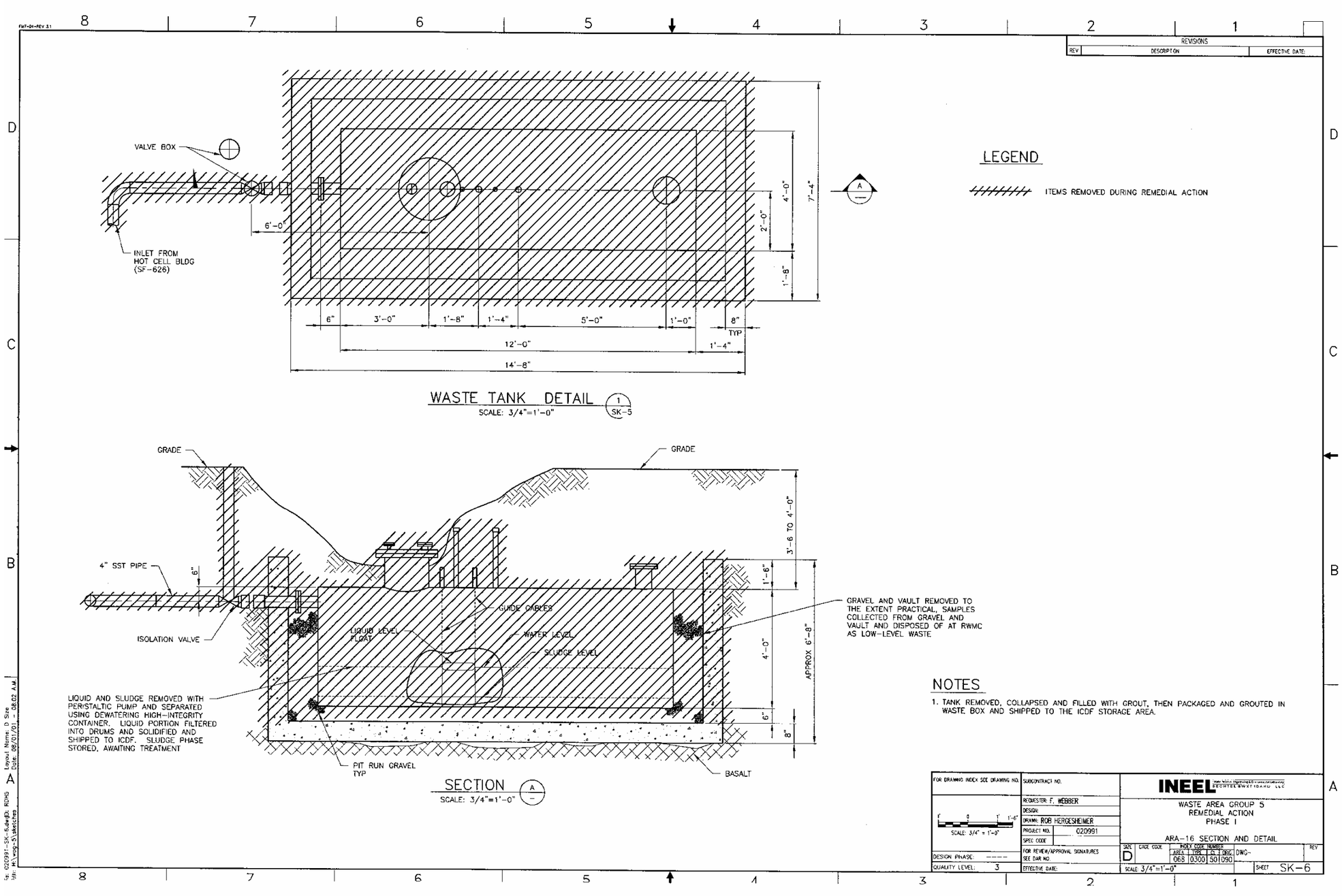

WASTE TANK DETAIL 1 SK-5
SCALE: 3/4"=1'-0"

SECTION A
SCALE: 3/4"=1'-0"

LEGEND

ITEMS REMOVED DURING REMEDIAL ACTION

NOTES

1. TANK REMOVED, COLLAPSED AND FILLED WITH GROUT, THEN PACKAGED AND GROUTED IN WASTE BOX AND SHIPPED TO THE ICDF STORAGE AREA.

LEGEND

ITEMS REMOVED DURING REMEDIAL ACTION

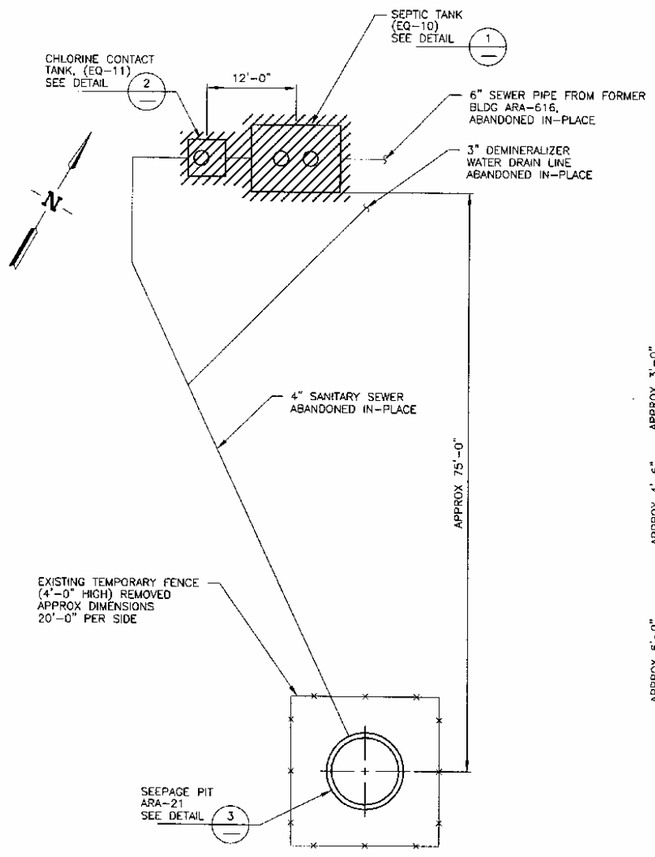

ARA-21 DEMOLITION PLAN

SCALE: 1/8"=1'-0"

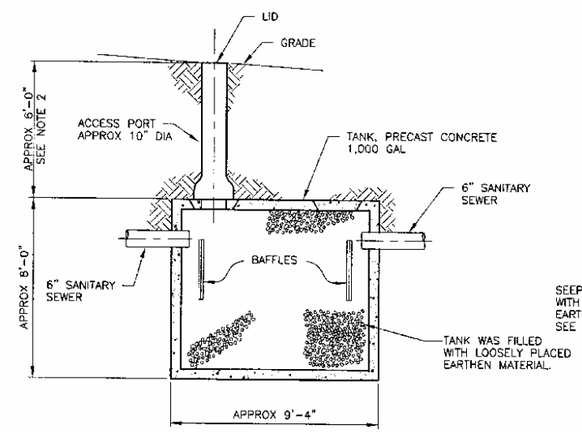

SEPTIC TANK (EQ-10) DETAIL 1

SCALE: 3/8"=1'-0"

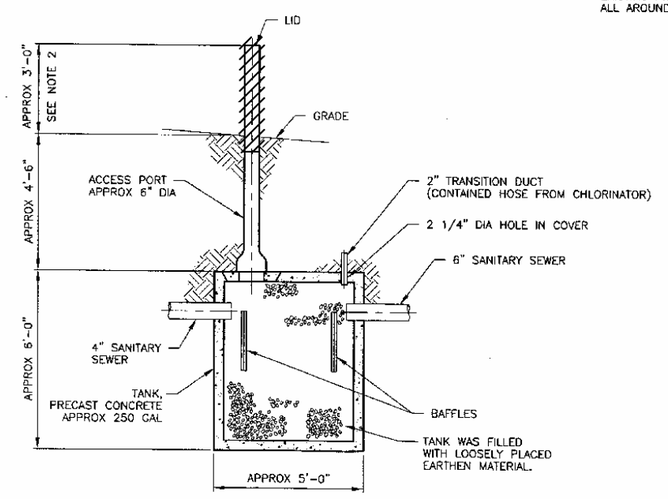

CHLORINE CONTACT TANK (EQ-11) DETAIL 2

NTS

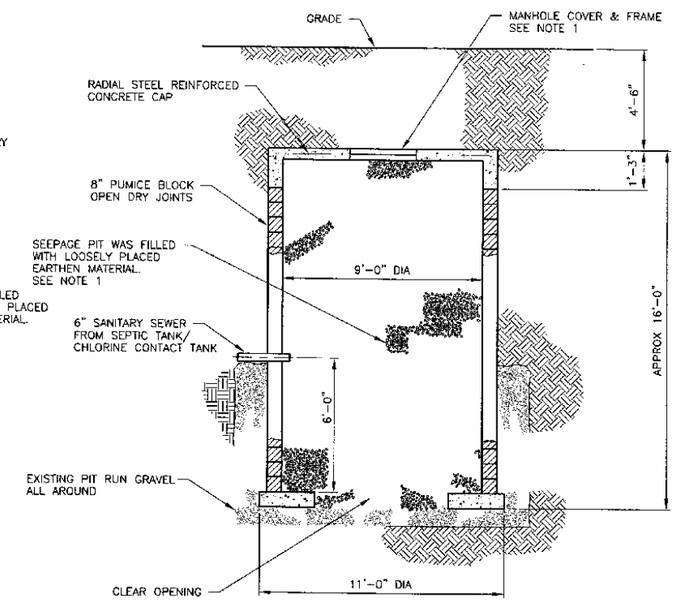

SEEPAGE PIT ARA-21 DETAIL 3

SCALE: 3/8"=1'-0"

NOTES

1. SEEPAGE PIT LID WAS REMOVED AND THE PIT WAS FILLED W/EARTHEN MATERIAL. THE LID WAS THEN REPLACED AND THE DISTURBANCE BACK FILLED USING EARTHEN MATERIAL TO MATCH EXISTING GRADE ELEVATION.
2. ALL COMPONENTS EXTENDING ABOVE GRADE WERE REMOVED AND THE DISTURBED AREA WAS REVEGETATED.

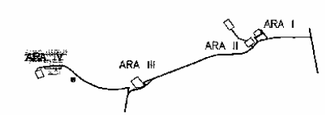

KEY PLAN

REVISIONS

REV	DESCRIPTION	EFFECTIVE DATE

FOR DRAWING INDEX SIZE DRAWING NO. SKETCH 1	SUBCONTRACT NO.
SCALE: 1/8" = 1'-0"	REQUESTER: F. WEBBER
SCALE: 3/8" = 1'-0"	DESIGN:
	DRAWN: J.A. LAWRENCE
	PROJECT NO. 020991
	SPEC CODE
	FOR REVIEW/APPROVAL SIGNATURES
	SEE DAR NO.
DESIGN PHASE: ----	EFFECTIVE DATE:
QUALITY LEVEL: 3	

INEEL

WASTE AREA GROUP 5
REMEDIAL ACTION
PHASE I

ARA-21 SEPTIC SYSTEM

SIZE	CAGE CODE	INDEX CODE NUMBER					REV
		ARA	TYP	E	LOBC	DWG-	
D		066	0300	50	090		

SCALE: NOTED SHEET SK-7

REVISIONS		
REV	DESCRIPTION	EFFECTIVE DATE

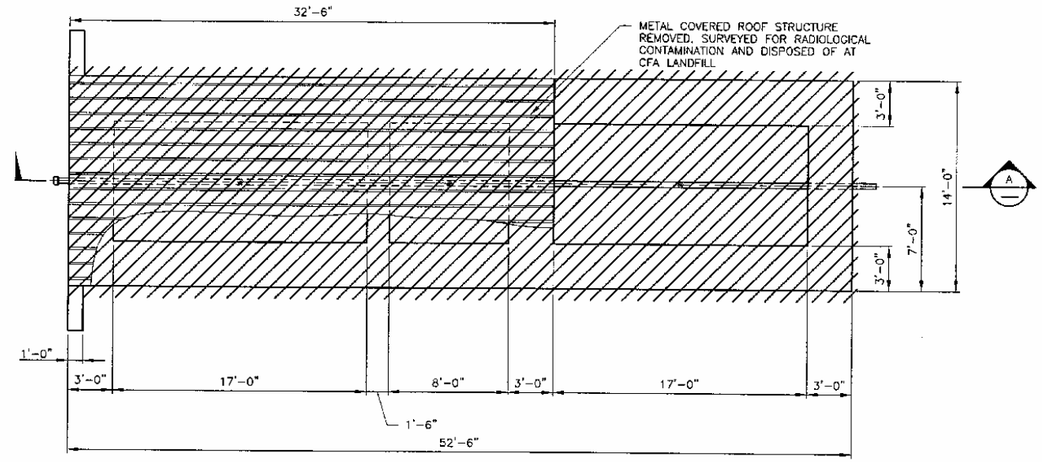

ARA-25 HOT CELLS DETAIL (1 / SK-5)

SCALE: 1/4"=1'-0"

LEGEND

ITEMS REMOVED DURING REMEDIAL ACTION

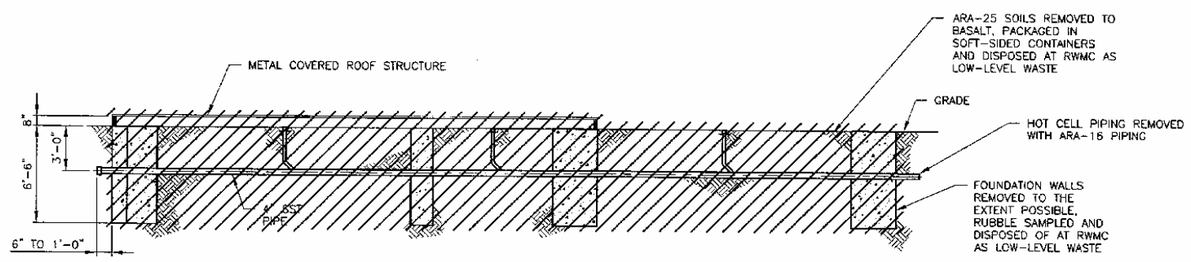

SECTION (A / –)

1/4"=1'-0"

FOR DRAWING INDEX SEE DRAWING NO.	SUBCONTRACT NO.	INEEL
SCALE: 1/4" = 1'-0"	REQUESTER: F. WEBBER	WASTE AREA GROUP 5 REMEDIAL ACTION PHASE I
SCALE: 1/2" = 1'-0"	DESIGN:	
	DRAWN: ROB HERGESHEIMER	ARA-25 SECTION AND DETAIL
	PROJECT NO. 020991	
	SPEC CODE	
DESIGN PHASE: ----	FOR REVIEW/APPROVAL SIGNATURES	SIZE D / CAGE CODE / INDEX CODE NUMBER: AREA 1 SITE 1 E-1 DBA 068 0300 50 090 / DMC- / REV
QUALITY LEVEL: 3	SEE DWG NO.	SCALE: NOTED / SHEET SK-8
	EFFECTIVE DATE:	