DOE/NE-ID-11221
Revision 1

U.S. Department of Energy
Idaho Operations Office

In Situ Bioremediation Interim Remedial Action Report, Test Area North, Operable Unit 1-07B

June 2005

Idaho Cleanup Project

DOE/NE-ID-11221
Revision 1
Project No. 23339

In Situ Bioremediation Interim Remedial Action Report, Test Area North, Operable Unit 1-07B

June 2005

Prepared for the
U.S. Department of Energy
Idaho Operations Office

ABSTRACT

This Interim Remedial Action Report is for the in situ bioremediation remedial component of Operable Unit 1-07B at Test Area North at the Idaho National Laboratory. Under U.S. Environmental Protection Agency guidance, an interim report for a long-term groundwater remedial action provides a chronology of events and a description of the remedial action facilities, systems, components, and operating documents that lead to a declaration that the system is operational and functional. It is the conclusion of this report that the in situ bioremediation remedial component includes the infrastructure and programs necessary to achieve the objectives of the in situ bioremediation remedial component for contaminated groundwater in the vicinity of the TSF-05 well; therefore, it can be deemed operational and functional.

CONTENTS

ABSTRACT iii

ACRONYMS ix

1. INTRODUCTION 1

1.1 Regulatory Background 2

1.2 Description of Test Area North Operable Unit 1-07B 2

1.3 Overall Remedial Action Summary 4

1.4 In Situ Bioremediation: The Hot Spot Remedial Component 6

1.4.1 Objectives of In Situ Bioremediation Implementation 7
1.4.2 Governing Documents 7
1.4.3 Operational Phases 7
1.4.4 Chronology of Events 9

2. IN SITU BIOREMEDIATION SYSTEM 11

2.1 Description of the In Situ Bioremediation System 11

2.1.1 In Situ Bioremediation Facility 11
2.1.2 In Situ Bioremediation Well Network 16
2.1.3 Monitoring Program 16
2.1.4 Institutional Controls 19

2.2 Construction 20

2.3 Operation and Maintenance Strategy 20

2.3.1 Routine Operations 21
2.3.2 Maintenance 21
2.3.3 Waste Management 21
2.3.4 Health and Safety 22

2.4 Final Inspection 23

2.5 Performance 23

3. OPERATIONAL AND FUNCTIONAL DETERMINATION 23

4. SUMMARY OF PROJECT COSTS AND ENFORCEABLE MILESTONES 24

5. OBSERVATIONS AND LESSONS LEARNED 27

5.1 Technical Perspective 27

5.1.1 Site Conceptual Model Updates 27
5.1.2 Enhanced Dissolution 27
5.1.3 Alternate Electron Donor Evaluation 28
5.1.4 Microbial Characterization 28

5.2 Operational Perspective 28

5.2.1 Amendment Delivery Systems 28
5.2.2 Extensive Use of Screening Data 29
5.2.3 Sampling and Analysis Optimization 29

6. CONTACT INFORMATION 30

7. REFERENCES 30

Appendix A—Final Inspection Details 35

FIGURES

1. Map of the Idaho National Laboratory showing the location of major facilities and Test Area North 3

2. Conceptual illustration of the remedial action components 6

3. In situ bioremediation implementation strategy 8

4. In situ bioremediation facility layout 12

5. In situ bioremediation well network and facility locations 13

6. Process flow diagram for the in situ bioremediation electron donor injection system 15

TABLES

1. Contaminants of concern in the vicinity of the TSF-05 injection well (established in the 1995 Record of Decision) 4

2. Timeline of events and documents relevant to in situ bioremediation implementation 10

3. Summary of in situ bioremediation remedial action groundwater performance monitoring strategy 18

4. Summary of in situ bioremediation remedial action groundwater compliance monitoring strategy 19

5. In situ bioremediation operations procedures 22

6. Operational and functional determination for the in situ bioremediation system 24

7. Operable Unit 1-07B remedial action cost summary 25

8. Agency deliverable documents 26

9. Project managers with contact information..... 30

ACRONYMS

AED	alternate electron donor
CERCLA	Comprehensive Environmental Response, Compensation, and Liability Act
CFR	*Code of Federal Regulations*
COC	contaminant of concern
COD	chemical oxygen demand
CWI	CH2M-WG Idaho, LLC
CWSA	CERCLA waste storage area
D&D	decontamination and decommissioning
DCE	dichloroethene
DOE	U.S. Department of Energy
DQO	data quality objective
EPA	U.S. Environmental Protection Agency
FY	fiscal year
GWTF	Groundwater Treatment Facility
ICP	Idaho Cleanup Project
INEEL	Idaho National Engineering and Environmental Laboratory
INEL	Idaho National Engineering Laboratory
INFO	information
INL	Idaho National Laboratory
IRC	Idaho National Laboratory Research Center
ISB	in situ bioremediation
MCL	maximum contaminant level
MNA	monitored natural attenuation
N/A	not applicable
NPTF	New Pump and Treat Facility

O&M	operations and maintenance
OU	operable unit
PCE	tetrachloroethene
PDD	program description document
PLN	plan
PPE	personal protective equipment
QA	quality assurance
QC	quality control
RAO	remedial action objective
RD/RA	remedial design/remedial action
RI/FS	remedial investigation/feasibility study
ROD	Record of Decision
T&FR	technical and functional requirement
TAN	Test Area North
TBD	to be determined
TCE	trichloroethene
TPR	technical procedure
TSF	Technical Support Facility
USC	*United States Code*
VOC	volatile organic compound

In Situ Bioremediation Interim Remedial Action Report, Test Area North, Operable Unit 1-07B

1. INTRODUCTION

In situ bioremediation (ISB) is one of three remedial components selected to complete the groundwater cleanup efforts associated with Operable Unit (OU) 1-07B at Test Area North (TAN) of the Idaho National Laboratory (INL). As part of the Comprehensive Environmental Response, Compensation, and Liability Act (CERCLA) (42 USC § 9601 et seq.) remediation activities, an ISB system was designed and constructed to remediate the hot spot of the contaminant plume. The ISB system injects amendment into the aquifer to enhance the growth of indigenous subsurface microorganisms that naturally dechlorinate trichloroethene (TCE), tetrachloroethene (PCE), dichloroethene (DCE), and vinyl chloride to nonhazardous compounds ethene, ethane, chloride, carbon dioxide, and water (DOE-ID 2004a). The construction, system testing, and Agency inspection and approval of this system have been completed as documented in the *In Situ Bioremediation Final Inspection Report* (ICP 2004a). Operations of this facility will continue for an extended period of time (estimated 20 to 30 years). Continued ISB operations will meet ISB objectives before 2095.

The purpose of this report is to provide information to lead to the declaration that the ISB remedial component is operational and functional. Pursuant to CERCLA regulations, "a remedy becomes 'operational and functional' either 1 year after construction is complete or when the remedy is determined concurrently by EPA and the state to be functioning properly and is performing as designed, whichever is earlier" (40 CFR 300.435 [f][2]). The ISB system has been operating for 1 year since the completion of the final inspection. The ISB component is comprised of the necessary programs and infrastructure required to achieve the objectives of the ISB remedial component of the overall remedial action.

As stated in the *Close Out Procedures for National Priorities List Sites* (EPA 2000), an interim remedial action report may be submitted for remedies involving groundwater restoration after completion of construction activities. This Interim Remedial Action Report provides information to demonstrate that the ISB system (which consists of the ISB Injection Facility, the injection and monitoring wells, and the monitoring program) is operational and functional. This report is written to include components required by U.S. Environmental Protection Agency (EPA) guidance (EPA 2000, 2001) and is organized into the following sections:

- Introduction (Section 1)
- Description of ISB system (Section 2)
- Operational and functional determination (Section 3)
- Summary of project costs and enforceable milestones (Section 4)
- Discussion of observations and lessons learned (Section 5)
- Contact information for project managers (Section 6)
- References (Section 7).

1.1 Regulatory Background

From about 1953 to 1972, liquid waste generated at TAN was disposed of by pumping the waste into the TSF-05 injection well in the southwest corner of the Technical Support Facility (TSF). This well dispersed the waste into the Snake River Plain Aquifer, which underlies the INL. The types of waste consisted mainly of industrial and sanitary wastewater but also included organic, inorganic, and low-level radioactive wastewaters. Activities that generated these types of waste included efforts to develop a nuclear-powered aircraft and tests simulating accidental loss of coolant from nuclear reactors. Contamination was discovered in 1989 and was first addressed in accordance with the *Consent Order and Compliance Agreement* (DOE-ID 1987).

In 1991, the EPA, U.S. Department of Energy (DOE), and the Idaho Department of Health and Welfare (presently named the Idaho Department of Environmental Quality) (i.e., the Agencies) entered into the *Federal Facility Agreement and Consent Order for the Idaho National Engineering Laboratory* (DOE-ID 1991). As a result, contaminated groundwater that emanates from TSF-05 was designated as OU 1-07B.

A remedial investigation/feasibility study (RI/FS) was completed (INEL 1994), which led to the approval of the *Record of Decision Declaration for the Technical Support Facility Injection Well (TSF-05) and Surrounding Groundwater Contamination (TSF-23) and Miscellaneous No Action Sites Final Remedial Action* (DOE-ID 1995). This Record of Decision (ROD) included a default remedy of pump and treat; however, it allowed for additional treatability studies to be performed that would be used to possibly determine if a more cost-effective remedy could be identified. During the performance of the treatability studies, it was made evident that the most cost-effective way to treat the contaminant plume was to divide the plume into three different zones that have distinctly different contaminant concentrations. The three zones were designated as the hot spot, the medial zone, and the distal zone. This distinction regarding the approach to the plume-wide cleanup process was documented in the *Explanation of Significant Differences from the Record of Decision for the Technical Support Facility Injection Well (TSF-05) and Surrounding Groundwater Contamination (TSF-23) and Miscellaneous No Action Sites, Final Remedial Action Operable Unit 1-07B Waste Area Group 1* (INEEL 1997).

Completion of the treatability study process identified ISB as a more cost-effective remedy for the hot spot area and was selected as the final remedy for that zone in the *Record of Decision Amendment Technical Support Facility Injection Well (TSF-05) and Surrounding Groundwater Contamination (TSF-23) and Miscellaneous No Action Sites, Final Remedial Action* (DOE-ID 2001a).

1.2 Description of Test Area North Operable Unit 1-07B

Operable Unit 1-07B is the final remedial action for the TSF-05 injection well and the surrounding groundwater contamination located within TAN, which is one of nine major facilities at the INL (Figure 1). The TSF-05 injection well is 93 m (310 ft) deep and is perforated from 55 to 74 m (180 to 244 ft) and 82 to 93 m (269 to 305 ft) below ground surface. Historical records provide little definitive information on the types and volumes of organic waste disposed of into the groundwater via the injection well. It is estimated that as little as 1,325 L (350 gal) or as much as 132,489 L (35,000 gal) of TCE may have been disposed of using the injection well during its period of operation. Table 1 is a list of contaminants of concern (COCs) in the vicinity of TSF-05 that was established in the ROD (DOE-ID 1995).

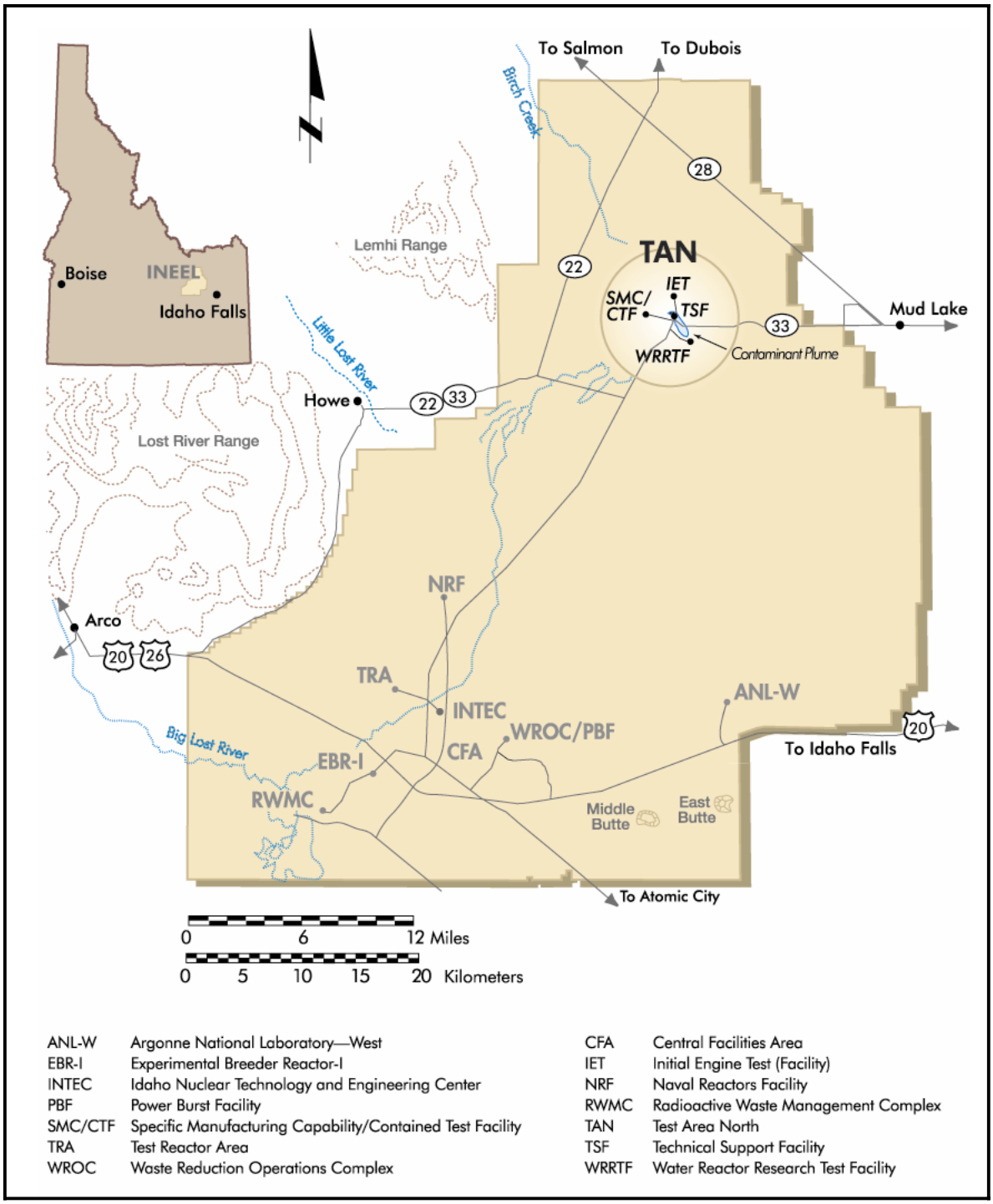

Figure 1. Map of the Idaho National Laboratory showing the location of major facilities and Test Area North.

Table 1. Contaminants of concern in the vicinity of the TSF-05 injection well (established in the 1995 Record of Decision).

Contaminant	Maximum Concentrations[a]	Federal Drinking Water Standard
Volatile Organic Compounds		
TCE	12,000–32,000 ppb[b]	5 ppb[c]
PCE	110 ppb	5 ppb[c]
cis-1,2-DCE	3,200–7,500 ppb	70 ppb[c]
trans-1,2-DCE	1,300–3,900 ppb	100 ppb[c]
Radionuclides		
Tritium	14,900–15,300 pCi/L[d]	20,000 pCi/L
Strontium-90	530–1,880 pCi/L	8 pCi/L
Cesium-137	1,600–2,150 pCi/L	119 pCi/L[e]
Uranium-234	5.2–7.7 pCi/L[d]	27 pCi/L[f]

ppb = parts per billion pCi/L = picocuries per liter

a. The concentration range is taken from measured groundwater concentrations at the TSF-05 injection well (INEEL 1999).

b. Higher TCE concentrations were detected during Phase A surge-and-stress pumping of the TSF-05 injection well.

c. ppb is a weight-to-weight ratio that is equivalent to micrograms per liter (μg/L) in water.

d. Maximum concentrations of tritium and U-234 are below federal drinking water standards, and baseline risk calculations indicate a cancer risk of 3×10^{-6}. While this risk is smaller than 1×10^{-4}, both tritium and U-234 are included as COCs as a comprehensive plume management strategy.

e. The MCL for Cs-137 is derived from a limit of 4 mrem/yr cumulative dose-equivalent to the public, assuming a lifetime intake of 2 L/day of water.

f. The federal drinking water standard for U-234 is for the U-234, U-235, and U-238 series.

COC = contaminant of concern
DCE = dichloroethene
INEEL = Idaho National Engineering and Environmental Laboratory
MCL = maximum contaminant level
PCE = tetrachloroethene
TCE = trichloroethene
TSF = Technical Support Facility

1.3 Overall Remedial Action Summary

The final remedy for OU 1-07B combines ISB for hot spot restoration and monitored natural attenuation (MNA) for distal zone restoration with pump and treat (selected in the ROD [DOE-ID 1995]) for the medial zone, providing a comprehensive approach to the restoration of the contaminant plume. The following is a description of the remedy components for restoration of the OU 1-07B hot spot, medial zone, and distal zone of the contaminant plume (illustrated conceptually in Figure 2) and the institutional controls, monitoring, and contingencies:

- **Hot Spot**—The selected remedial component for the hot spot is ISB. In situ bioremediation promotes bacterial growth by supplying essential nutrients to indigenous bacteria that are able to break down contaminants within the aquifer. An amendment (i.e., sodium lactate or whey powder) is injected into the secondary source area through the TSF-05 injection well or through other

injection wells in the immediate vicinity. Amendment injections increase the number of bacteria, thereby increasing the rate at which the volatile organic compounds (VOCs) break down into harmless compounds. The amendment supply is distributed as needed, and the treatment system operates year-round.

- **Medial Zone**—The selected remedy component for the medial zone is pump and treat. The pump-and-treat remedy component involves extraction of contaminated groundwater, treatment through air strippers, and injection of treated groundwater back into the aquifer. In accordance with the original remedy selected in the ROD (DOE-ID 1995), construction of the New Pump and Treat Facility (NPTF) in the medial zone was completed in January 2001. Routine operations for the NPTF began on October 1, 2001. The Agencies approved a medial zone rebound test to evaluate the effectiveness of the NPTF. The NPTF was shut down on March 1, 2005, and the duration of this rebound test is approximately 24 months.

- **Distal Zone**—The selected remedy component for the distal zone is MNA. Natural attenuation is the physical, chemical, and biological processes that act without human intervention to reduce the mass, toxicity, mobility, volume, or concentration of contaminants in groundwater. Monitored natural attenuation includes groundwater monitoring to compare actual measured degradation rates to predicted degradation rates.

- **Institutional Controls**—Engineering and administrative controls have been put in place to protect current and future users from health risks associated with groundwater contamination. Groundwater monitoring and numerical modeling will be used to track the plume boundary; the institutional control area will be modified, as required, to maintain a conservative buffer zone around the contaminant plume area.

- **Monitoring**—Groundwater monitoring is conducted throughout the plume with samples analyzed to determine the progress of the remedy.

- **Contingencies**—Contingencies identified under the remedy include:

  - For the medial zone, monitoring wells located upgradient of the NPTF will be monitored on a routine basis to ensure that concentrations of radionuclides in the groundwater remain low. If monitoring indicates that the concentration of radionuclides in the NPTF effluent would exceed maximum contaminant levels (MCLs), the air-stripper treatment unit, located between the hot spot and the NPTF (but not currently operating), will be used to prevent those radionuclides from traveling downgradient to the NPTF.

  - For the distal zone, if the Agencies determine that MNA will not restore the distal zone of the plume within the restoration timeframe, pump-and-treat units will be designed, constructed, and operated in the distal zone to remediate the plume. This contingency remedy also will be invoked if the required monitoring necessary for MNA is not performed.

Under the final remedy for OU 1-07B, the concentrations of the radionuclide COCs in the hot spot and medial zone will meet the remedial action objectives (RAOs) stated in the ROD (DOE-ID 1995) within the remedial timeframe through natural attenuation processes. Concentrations of the radionuclide COCs in the distal zone have never exceeded the RAOs. The groundwater monitoring program will include monitoring the attenuation of radionuclide COCs in the hot spot and the medial zone.

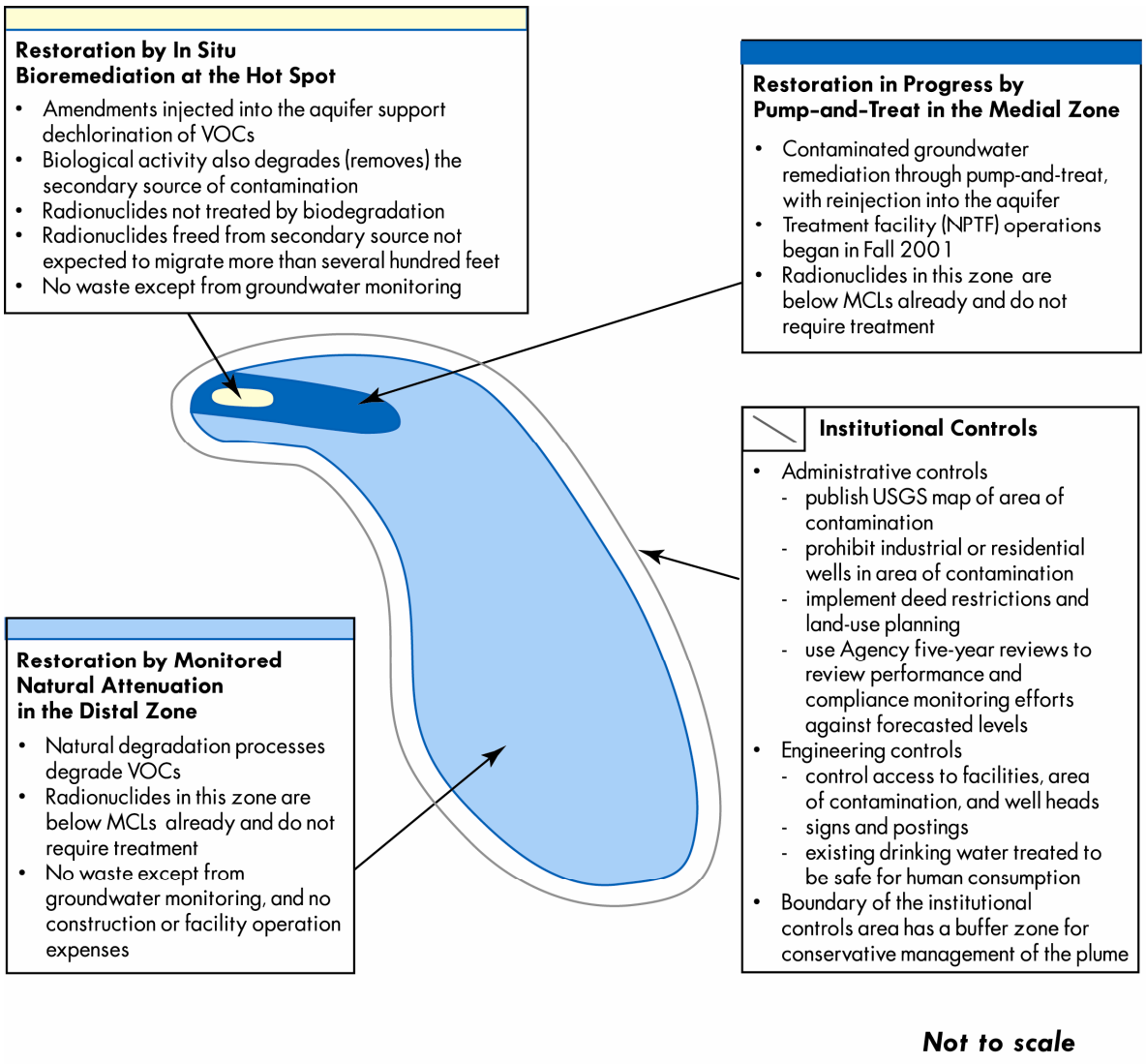

Figure 2. Conceptual illustration of the remedial action components.

1.4 In Situ Bioremediation: The Hot Spot Remedial Component

As part of the overall OU 1-07B groundwater remedial action, ISB is the final hot spot remedial component. The ISB remedial component involves regular injection of amendments into injection wells and monitoring groundwater throughout the hot spot. The ISB system, working in conjunction with naturally occurring organisms, is capable of stopping contaminant flux from leaving the hot spot and degrading the source within the hot spot. This is accomplished by creating a biologically reduced zone that encompasses the hot spot by injection of an electron donor, which stimulates biological activity in the aquifer.

This Interim Remedial Action Report addresses the system (as described in Section 2) needed to implement ISB in the hot spot area. This section provides background and description of the ISB remedial component, which is also referred to as ISB. Included in this section is a description of the ISB objectives (Section 1.4.1), governing documents (Section 1.4.2), operational phases (Section 1.4.3), and chronology of events (Section 1.4.4).

1.4.1 Objectives of In Situ Bioremediation Implementation

The compliance and performance monitoring objectives for ISB consist of demonstrating meaningful progress toward restoration of the hot spot contaminated groundwater by 2095 (100 years from the signature of the ROD [DOE-ID 1995]) by reducing all COCs to below MCLs and a 1×10^{-4} total cumulative carcinogenic risk-based level for future residential groundwater use and, for noncarcinogens, until the cumulative hazard index is less than 1 (DOE-ID 2001a). These objectives will be met through operation of the ISB system and through continued monitoring to demonstrate (1) complete dechlorination of VOCs to prevent (to the maximum extent practicable) migration of VOCs above MCLs beyond the hot spot, (2) degradation of the source area, and (3) restoration of the plume by 2095.

1.4.2 Governing Documents

The *In Situ Bioremediation Remedial Action Work Plan for Test Area North Final Groundwater Remediation, Operable Unit 1-07B* (DOE-ID 2004b) outlines the process for implementing ISB at TAN. The ISB Remedial Action Work Plan was developed in concert with several supporting documents to establish the basis for ISB operations. It identifies and establishes the ISB system's technical and functional requirements (T&FRs), design requirements, applicable or relevant and appropriate requirements, and the requirements for operation, monitoring, and reporting. The supporting documentation provides technical methods, procedures, and protocols for implementing the requirements. Other documents that govern ISB operations and monitoring include:

- *In Situ Bioremediation Operations and Maintenance Plan for Test Area North, Operable Unit 1-07B* (DOE-ID 2004a)
- *In Situ Bioremediation Remedial Action Groundwater Monitoring Plan for Test Area North, Operable Unit 1-07B* (INEEL 2003)
- *Test Area North Operable Unit 1-07B Final Groundwater Remedial Action Health and Safety Plan* (INEEL 2002a)
- *Interim Decontamination Plan for Operable Unit 1-07B* (INEEL 2002b)
- *Waste Management Plan for Test Area North Final Groundwater Remediation Operable Unit 1-07B* (ICP 2005).

1.4.3 Operational Phases

For the OU 1-07B ISB remedial component, a phased implementation strategy is being conducted for current and future activities. This implementation strategy and completion criteria are shown in Figure 3, which is modified from the ISB Remedial Action Work Plan (DOE-ID 2004b) and includes clarifications from the ISB Operations and Maintenance (O&M) Plan (DOE-ID 2004a). Completion of the ISB Interim Remedial Action Report was not stated in previous documents, but the Agencies requested that the ISB Interim Remedial Action Report deliverable be added as a milestone decision point, as shown in Figure 3. The implementation strategy provides a sequenced approach designed to provide the time necessary to optimize electron donor addition prior to the start of long-term operations and to monitor secondary source degradation. The ISB implementation phases are:

1. **Interim Operations**—Interim operations consist of the period of time governed by the ISB Remedial Action Work Plan before the start-up of the final remedy. This phase covers activities that support a better understanding of injection strategies and electron donors.

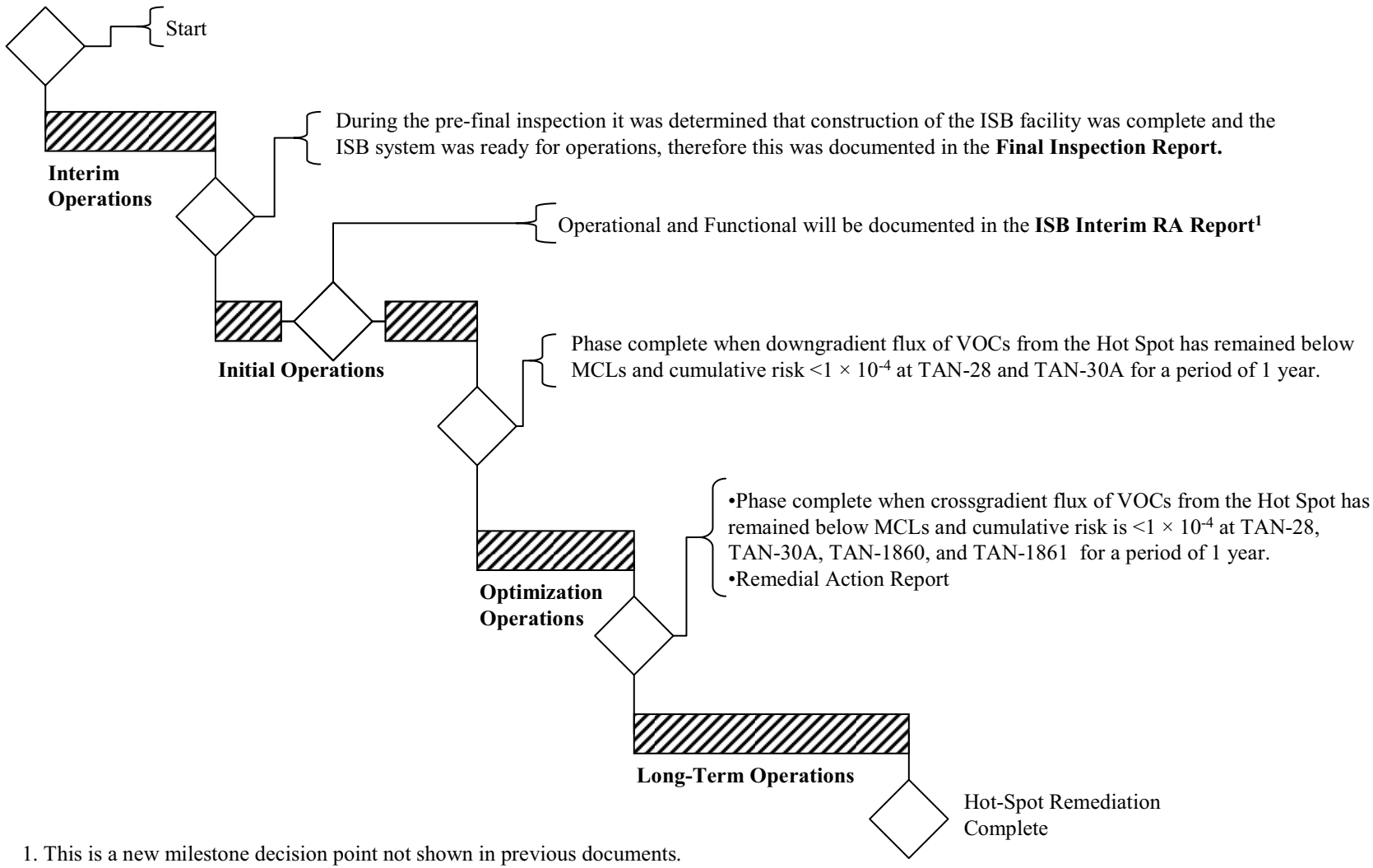

1. This is a new milestone decision point not shown in previous documents.

Figure 3. In situ bioremediation implementation strategy.

2. **Initial Operations**—This phase is ongoing and focuses on reducing the flux of VOCs from the hot spot in the downgradient direction, which will be determined by monitoring VOC concentrations at the TAN-28 and TAN-30A downgradient wells. During this phase, data are being gathered and analyzed relating to achievement of the long-term performance objectives of determining whether MCLs have been achieved throughout the hot spot.

3. **Optimization Operations**—This phase will focus on reducing the flux of VOCs from the hot spot in the crossgradient direction while maintaining VOC flux reduction in the downgradient direction, which will be determined by monitoring VOC concentrations at the TAN-1860 and TAN-1861 crossgradient wells. During this phase, data will continue to be gathered and analyzed relating to achievement of the long-term performance objectives of determining whether MCLs have been achieved throughout the hot spot.

4. **Long-Term Operations**—This phase will focus on achievement of hot spot source degradation, while maintaining the reduction of VOC flux from the hot spot in the crossgradient and downgradient directions.

Each phase has specific completion criteria that, when achieved, lead to the next phase or completion of the remedy component. The completion criteria for a given phase require the monitoring and evaluation of ISB performance parameters. Documents produced at various stages of implementation include the completed Final Inspection Report, this Interim Remedial Action Report, and the yet to be completed Remedial Action Report.

1.4.4 Chronology of Events

The overall remedial action for the OU 1-07B contaminant plume consists of three remedial components, as described in Section 1.3, which include the ISB remedial component. This section lists a chronology of events that led to the implementation of ISB as the hot spot remedial component (Section 1.4.4.1) and a summary of events that have occurred since the establishment of the ISB system and future activities, including the current projection for achieving the RAOs (Section 1.4.4.2). Table 2 lists these events and documents with the corresponding references.

1.4.4.1 Events Leading to Implementation of In Situ Bioremediation. In 1995, a ROD (DOE-ID 1995) was written with a requirement to conduct treatability studies focused on specific technologies that offered the potential to be more cost effective than the original remedy, which was "hot spot containment and/or removal with aboveground treatment." The technologies studied included metal enhanced reductive dehalogenation, monolithic confinement, ISB, in situ chemical oxidation, and MNA. The Technology Evaluation Work Plan Test Area North Final Groundwater Remediation Operable Unit 1-07B (DOE-ID 1997a) was established in 1997, which governed evaluation of alternatives. The results of the treatability studies—which were concluded in 1999 and summarized in the Field Demonstration Report, Test Area North Final Groundwater Remediation, Operable Unit 1-07B (DOE-ID 2000)—demonstrated that the ISB technology evaluation met or exceeded all objectives and expectations. The technical success of the field evaluation, combined with the preliminary cost information, supported a recommendation to implement ISB for remediation of the hot spot. Therefore, in 2001, the ROD Amendment (DOE-ID 2001a) was written that selected ISB to replace pump and treat for the hot spot area.

Table 2. Timeline of events and documents relevant to in situ bioremediation implementation.

Events	Date	Reference
Remedial Investigation	January 1994	INEL 1994
Record of Decision	August 1995	DOE-ID 1995
RD/RA Scope of Work	August 1997	DOE-ID 1997b
OU 1-07B Explanation of Significant Differences	November 1997	INEEL 1997
Technology Evaluation Work Plan	March 1997	DOE-ID 1997a
ISB Field Evaluation Work Plan	September 1998	DOE-ID 1998
ISB Field Evaluation Report	July 2000	INEEL 2000
Field Demonstration Report	March 2000	DOE-ID 2000
Record of Decision Amendment	September 2001	DOE-ID 2001a
RD/RA Scope of Work	November 2001	DOE-ID 2001b
ISB Remedial Action Work Plan	January 2003	DOE-ID 2004b
ISB Operations and Maintenance Plan	January 2003	DOE-ID 2004a
ISB Groundwater Monitoring Plan	January 2003	INEEL 2003
Construction		
ISB Prefinal Inspection	October 2003	ICP 2004a
ISB Final Inspection Report	October 2003	ICP 2004a
Begin Initial Operations	October 2003	ICP 2004a
Alternate Electron Donor Optimization	March 2004[a]	ICP 2004b
Projection for Achieving RAOs	By 2095	DOE-ID 2004b

a. Alternate electron donor optimization began in March 2004 and is ongoing.

DOE-ID = U.S. Department of Energy Idaho Operations Office
ICP = Idaho Cleanup Project (formerly Idaho Completion Project)
INEEL = Idaho National Engineering and Environmental Laboratory
INEL = Idaho National Engineering Laboratory
ISB = in situ bioremediation
OU = operable unit
RAO = remedial action objective
RD/RA = remedial design/remedial action

Following the ROD Amendment, efforts began to implement ISB as the final hot spot remedial component. These efforts included predesign operations and development of the governing documents. Predesign operations continued ISB operations under the *In Situ Bioremediation Predesign Operations Work Plan Test Area North, Operable Unit 1-07B* (INEEL 2001). During this time period, the governing documents discussed in Section 1.4.2 were developed as driven by the *Remedial Design/Remedial Action Scope of Work Test Area North Final Groundwater Remediation Operable Unit 1-07B* (DOE-ID 2001b), which was developed just after the completion of the ROD Amendment. These documents established programs for groundwater monitoring, electron donor injections, and institutional controls. Construction activities included installation of wells and building the ISB facility.

1.4.4.2 Events Following Implementation of In Situ Bioremediation. The prefinal inspection was conducted on October 16–17, 2003. During the prefinal inspection, the regulatory agencies inspected the ISB system, including governing documents, the ISB facility, and the monitoring and injection well network. As a result of the prefinal inspection, it was concluded that construction of the ISB facility was complete and the ISB system was ready for operations. Therefore, the prefinal inspection became the final inspection and the ISB Final Inspection Report (ICP 2004a) was prepared.

Upon completion of the inspection in October 2003, initial operations began with regular injections of sodium lactate and monitoring according to the prescribed program. The injection facility was constructed to allow the injection of alternate electron donors (AEDs) such as whey powder (see Section 2.1.1). Evidence from laboratory studies suggested that whey powder might enhance performance and decrease the cost of ISB operations (ICP 2004c). As a result, initial operations included the evaluation of whey powder as an AED and potential replacement for sodium lactate (ICP 2004b). This electron donor optimization is ongoing.

1.4.4.3 Projection for Meeting Remedial Action Objectives. The ISB operations will continue according to the phased implementation strategy summarized in Section 1.4.3. As shown in Table 2, the RAOs for the ISB remedial component are projected to be achieved by 2095, 100 years from the signature of the ROD (DOE-ID 1995). The ROD Amendment (DOE-ID 2001a) states that if evaluations show that the RAOs will not be met within the restoration timeframe, then the contingency remedy will be implemented. Evaluation of ISB implementation to the compliance and performance objectives stated in the ISB Remedial Action Work Plan (DOE-ID 2004b) demonstrates that the ISB component is operating as expected; therefore, the projected timeframe noted in the ROD Amendment has not been modified.

2. IN SITU BIOREMEDIATION SYSTEM

The ISB system is composed of the infrastructure and programs required to achieve the objectives of the ISB remedial component of the overall remedy. The ISB system includes the injection equipment, wells, ISB facility, and a monitoring program. This section provides a description of these components of the ISB system (Section 2.1), a synopsis of the construction (Section 2.2), a description of O&M (Section 2.3), a summary of results and findings from the final inspection (Section 2.4), and a synopsis of performance of the ISB system from start-up to the present (Section 2.5).

2.1 Description of the In Situ Bioremediation System

Operational resources required to implement the remedial action include personnel, physical infrastructure, and institutional controls. Physical components of the ISB system include injection wells, monitoring wells, and the ISB facility. A groundwater monitoring program also has been established to monitor the performance of ISB. This section includes a description of the ISB facility (Section 2.1.1), well network (Section 2.1.2), monitoring program (Section 2.1.3), and institutional controls (Section 2.1.4).

2.1.1 In Situ Bioremediation Facility

A new building, TAN-1614, was constructed specifically for use as the ISB Injection Facility and provides laboratory and office space for the OU 1-07B project. It is a 30 × 40-ft prefabricated building set onto a slab-on-grade concrete base. The ISB facility is divided into three areas: (1) an amendment storage (500 ft^2) and process area (300 ft^2), (2) a field laboratory (250 ft^2), and (3) office space (150 ft^2) (see Figure 4). The building is situated southeast of the TAN-37 well (Figure 5). The well network and facility locations are discussed in Section 2.1.2.

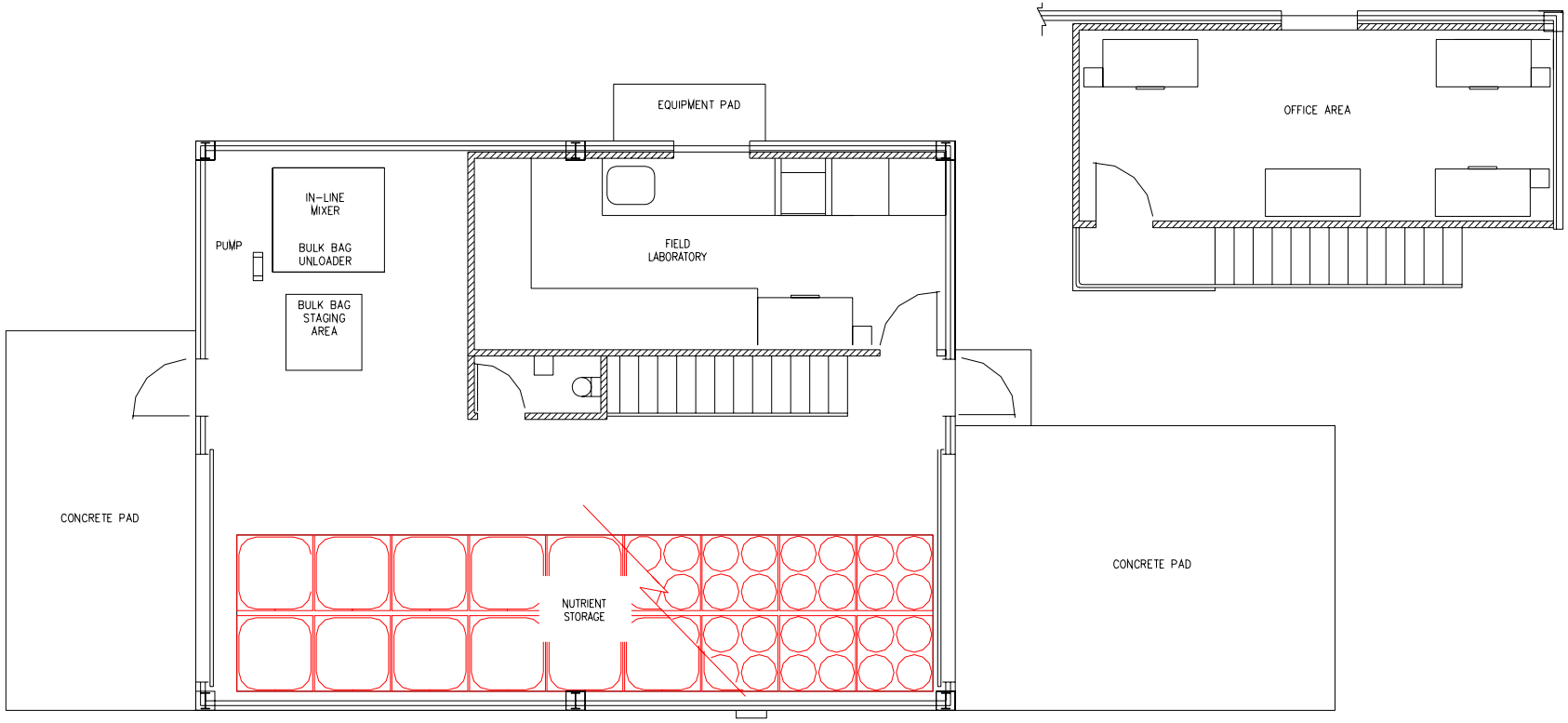

Figure 4. In situ bioremediation facility layout.

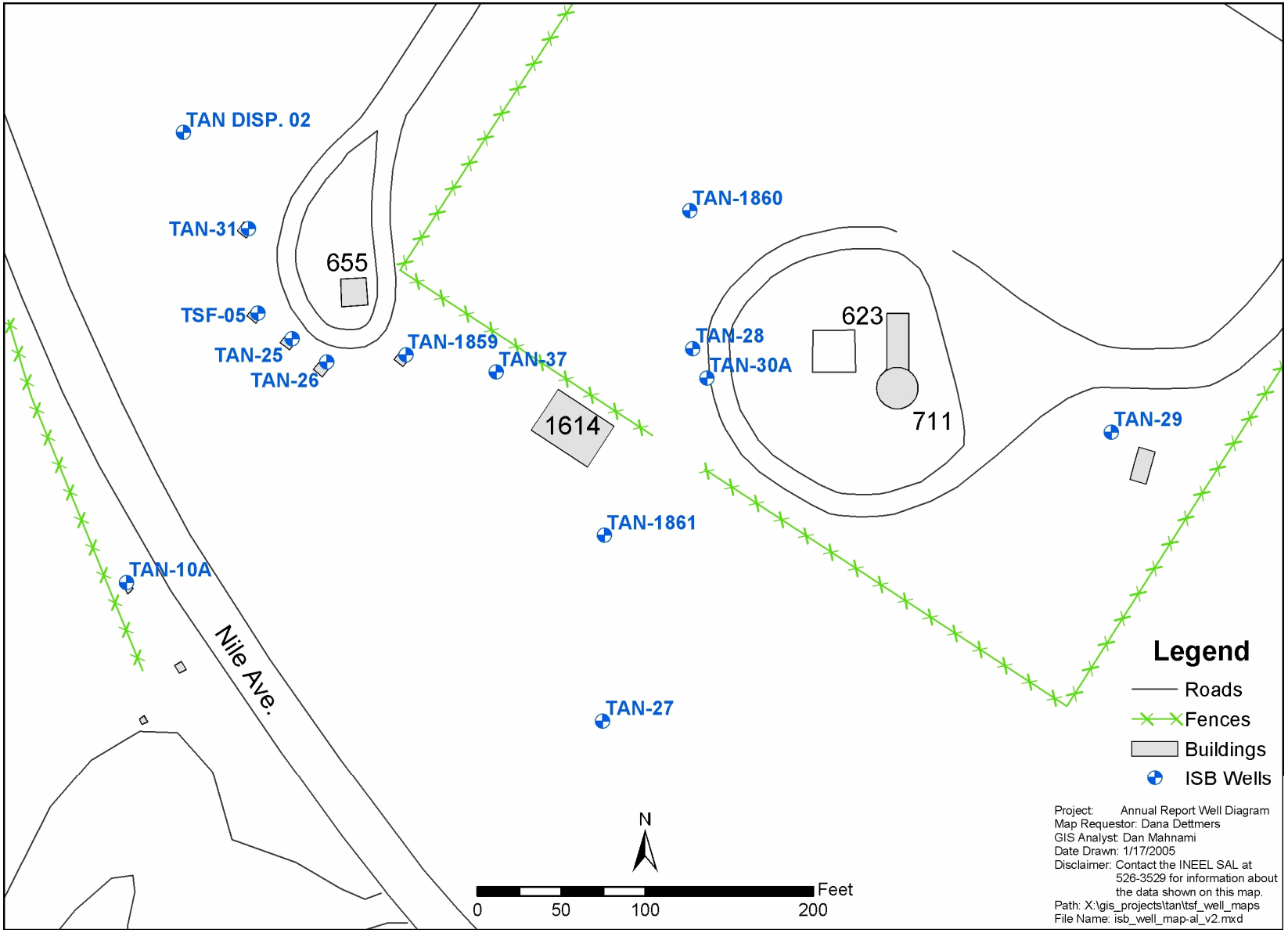

Figure 5. In situ bioremediation well network and facility locations.

Individual areas of the ISB facility and relevant operational requirements are described in this section, including the injection equipment (Section 2.1.1.1) and the field laboratory (Section 2.1.1.2). The facility also provides office space and is used to stage up to 20 pallets of electron donor. This storage area is accessible for loading and unloading pallets through two overhead doors on either end of the building (Figure 4) and is heated in the winter to mitigate problems associated with high-concentration amendment solutions that become excessively viscous at low temperatures.

2.1.1.1 Injection Equipment. The electron donor injection equipment is designed to mix electron donor with potable water at specific ratios and inject the resulting solution into injection wells. *The In Situ Bioremediation Remedial Design Test Area North, Operable Unit 1-07B* report (DOE-ID 2003) provides the design of the injection system. The following list is a summary of the general design parameters:

- The injection system provides the components needed to inject the designated amendments into the TAN-31, TAN-1859, and TSF-05 wells (see Section 2.1.2 for a description of the well network)
- The system is capable of injecting the amendment solution into each of the three wells individually at flow rates between 76 L/min (20 gpm) and 189 L/min (50 gpm)
- As a minimum, the system has the capability to inject amendment solution 10 hours/day for up to 4 days/week
- The system is designed for a 15-year operating life
- The system is capable of performing periodic injections year-round
- The system is capable of injecting sodium lactate, whey powder, or molasses.

Equipment locations within the ISB facility are shown in Figure 4. The amendment injection process flow diagram is shown in Figure 6. The injection system is comprised of a bulk bag unloader and handling system, amendment injection device (eductor or pump), flow controls, monitoring instrumentation, and piping. Injection equipment includes:

- Pressure and flow indicators
- Pressure switch
- Pump
- Bulk bag unloader (includes overhead crane and hopper)
- Eductor
- Backflow preventer
- Vacuum breaker
- Piping to injection wells.

2.1.1.2 Field Laboratory. The ISB facility includes a 250-ft^2 (23.2-m^2) field laboratory used for performing field test kit analyses, sample preparations, secure sample storage, and to prepare samples for shipping and transportation. Field laboratory equipment for sample analyses includes colorimeters, reagents and standards (with appropriate storage areas), digital titrators, chemical oxygen demand (COD), digestors, alpha and beta counters, an analytical scale, pipettes, and other equipment. Equipment available for sample storage and shipping and transportation includes a refrigerator, scale, coolers, and other

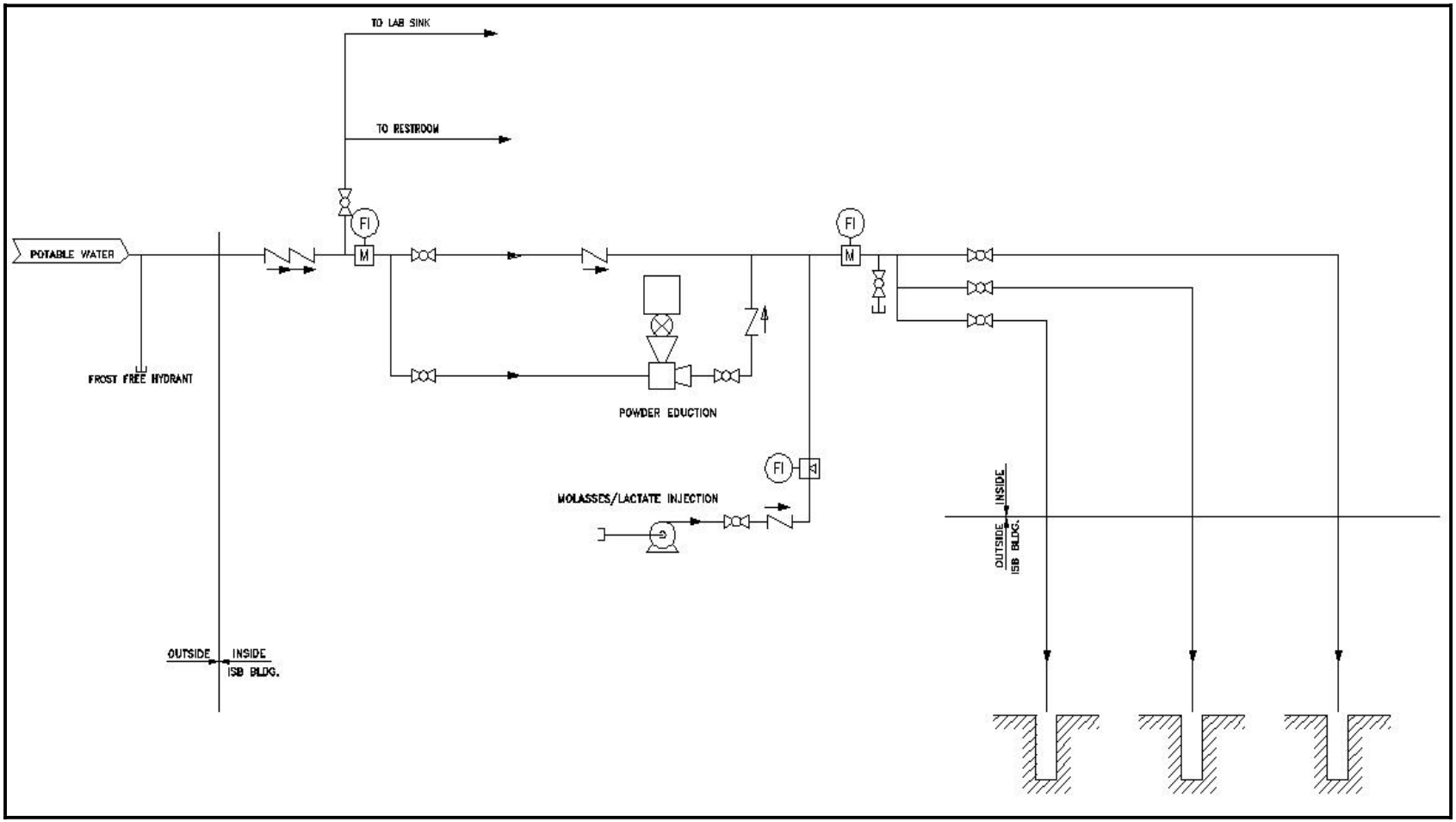

Figure 6. Process flow diagram for the in situ bioremediation electron donor injection system.

equipment. Safety and waste disposal equipment also is available in the field laboratory, including a fume hood, personal protective equipment (PPE), and waste containers for temporary storage of solid and liquid waste.

2.1.2 In Situ Bioremediation Well Network

The ISB well network consists of wells used for groundwater monitoring and injection of amendments. Figure 5 illustrates the relative locations of these wells. Current amendment injection wells include TSF-05, TAN-1859, and TAN-31. This well network includes groundwater monitoring locations both inside and outside the residual source area. Downgradient monitoring wells are strategically located to monitor flux of contaminants from the residual source area. Most wells are screened at depths approximately corresponding to the depth of the residual source area and contaminated groundwater. The TAN-26 well is screened below the residual source area and the TSF-05 and TAN-37 wells can be sampled at multiple depths.

2.1.3 Monitoring Program

In order to meet the objectives of the ISB remedial component, the monitoring program is designed to collect groundwater samples to evaluate the effectiveness of source containment and removal. The monitoring program is summarized in this section. The ISB Groundwater Monitoring Plan (INEEL 2003) provides a more complete description of the program.

The groundwater monitoring program is designed to meet data quality objectives (DQOs) developed for the ISB remedial component, which are presented in detail in the ISB Remedial Action Work Plan (DOE-ID 2004b). The DQOs were prepared following EPA's *Guidance for the Data Quality Objective Process* (EPA 1994) and included consideration of method detection limits and experience with sampling and analysis methods required to support decisions on remedy performance. Data quality requirements for all INL CERCLA investigations and remedial responses are defined in the *Quality Assurance Project Plan for Waste Area Groups 1, 2, 3, 4, 5, 6, 7, 10, and Deactivation, Decontamination, and Decommissioning* (DOE-ID 2004c).

Groundwater monitoring is performed to obtain performance and compliance monitoring data to support evaluation of progress toward meeting the objectives of each implementation phase discussed in Section 1.4.3 and eventually to confirm that the ISB remedial component objectives have been achieved. In summary, the program is used to:

- Document concentration changes of COCs over time
- Provide data that will be used to perform periodic reviews and evaluations
- Evaluate progress toward meeting the RAOs established in the ROD Amendment (DOE-ID 2001a).

2.1.3.1 Sampling Strategy. Groundwater samples are routinely taken from the well network identified in Section 2.1.2. The sampling strategy is based on the results of the DQO process and the experience gained during predesign operations. Two types of monitoring (performance and compliance) are defined and a detailed discussion of the specific indicator parameters for both types of monitoring is provided in the ISB Groundwater Monitoring Plan (INEEL 2003). A summary presentation of the indicator parameters and subsequent decisions for both types of monitoring is provided in this section.

Groundwater monitoring data are required during each phase of remedy implementation to support decisions. Tables 3 and 4 portray the performance and compliance monitoring strategies, respectively, for the operational phases, including a summary of the indicator parameters to be monitored and the subsequent decisions.

2.1.3.2 Analytes. The data to be collected from groundwater sampling activities include measures of electron donor parameters, oxidation/reduction, bioactivity, anaerobic reductive dechlorination of VOCs, and radiological contaminants. These data are generated from analytical procedures used in the field laboratory, INL Research Center (IRC) laboratory, and off-Site laboratories. Detailed information on analytical methods and data management is provided in the ISB Groundwater Monitoring Plan (INEEL 2003).

The monitoring strategy includes requirements for some data to meet certain data quality levels. The data quality levels are fully defined and their application is discussed in the ISB Remedial Action Work Plan (DOE-ID 2004b). In general, definitive-level data are generated using rigorous analytical methods such as approved American Society for Testing and Materials or EPA methods. Definitive data quality assurance/quality control (QA/QC) elements include:

- Sample documentation (e.g., location, date, and time)
- Chain of custody
- Sampling design approach
- Initial and continuing calibration
- Determination and documentation of detection limits
- Analyte or property identification
- QC blanks (field and method)
- Matrix spike recoveries
- Analytical error determination
- Total measurement error determination.

2.1.3.3 Quality Assurance and Quality Control. The QA/QC requirements for the monitoring program were developed in the ISB Remedial Action Work Plan (DOE-ID 2004b) to meet the DQOs for the ISB remedial component and to follow data quality requirements defined in the Quality Assurance Project Plan (DOE-ID 2004c). The QA/QC requirements allow determination that all analytical results reported are accurate and adequate to ensure satisfactory execution of the ISB remedial component. To date, there have been no significant deviations from the QA/QC requirements to result in rejection of any data.

Table 3. Summary of in situ bioremediation remedial action groundwater performance monitoring strategy.

Monitoring Type/Strategy Element	Operational Phase		
	Initial	Optimization	Long Term
Decision	Determine whether operational changes are required by routinely monitoring the performance of the ISB system with respect to indicator parameters.		
Monitoring locations	TSF-05A, TSF-05B, TAN-10A, TAN-25, TAN-26, TAN-27, TAN-28, TAN-29, TAN-30A, TAN-31, TAN-37A, TAN-37B, TAN-37C, and TAN-D2, TAN-1861, TAN-1860		
Monitoring frequency/ analytes	Monthly: VOCs (PCE, TCE, cis- and trans-DCE, vinyl chloride), electron donor evaluation parameters (COD, lactate or lactose, acetate, propionate, butyrate), redox parameters (ferrous iron, sulfate), bioactivity parameters (alkalinity), dissolved gases (ethene, ethane, methane), and tritium		Quarterly: VOCs (PCE, TCE, cis- and trans-DCE, vinyl chloride), electron donors (COD, lactate, acetate, propionate, butyrate), redox parameters (ferrous iron, sulfate), bioactivity parameters (alkalinity), dissolved gases (ethene, ethane, methane), and tritium; Sr-90, Cs-137 (TAN-29 only)
	Annually: Sr-90; semiannually: gamma spectrometry (Cs-137) for TAN-29 only; definitive confirmation (off-Site splits) for VOCs		Semiannual: nutrients (ammonia-nitrogen, phosphate)
	Semiannual: nutrients (ammonia-nitrogen, phosphate)		Annual: gross alpha; definitive confirmation for VOCs
	Annual: gross alpha		
Data quality required[a]	Screening with definitive confirmation for VOCs Definitive for radionuclides and definitive confirmation for VOCs Screening for all other analytes		
Data validation level required[b]	Level A for VOC definitive confirmation and radionuclide analyses No data validation for onsite and IRC laboratory data		

a. Data quality levels are defined in the Quality Assurance Project Plan (DOE-ID 2004c).
b. Data validation levels are defined in the Quality Assurance Project Plan (DOE-ID 2004c).
COD = chemical oxygen demand
DCE = dichloroethene
DOE-ID = U.S. Department of Energy Idaho Operations Office
IRC = Idaho National Laboratory Research Center
PCE = tetrachloroethene
TAN = Test Area North
TCE = trichloroethene
TSF = Technical Support Facility
VOC = volatile organic compound

Table 4. Summary of in situ bioremediation remedial action groundwater compliance monitoring strategy.

Monitoring Type/Strategy Element	Operational Phase		
	Initial	Optimization	Long Term
Decision	Determine whether downgradient flux of contaminants from the hot spot has been cut off.	Determine whether crossgradient flux of contaminants from the hot spot has been cut off.	Determine whether MCLs have been achieved throughout the hot spot.
Monitoring duration	1 year		TBD
Monitoring frequency	Quarterly		TBD
Monitoring locations	TAN-28 and TAN-30A	TAN-1860 and TAN-1861	TBD
Analytes	VOCs (PCE, TCE, cis- and trans-DCE, and vinyl chloride)		TBD
Data quality required[a]	Definitive		TBD
Data validation level required[b]	Level A		TBD

a. Data quality levels are defined in the Quality Assurance Project Plan (DOE-ID 2004c)

b. Data validation levels are defined in the Quality Assurance Project Plan (DOE-ID 2004c)

DCE = dichloroethene
DOE-ID = U.S. Department of Energy Idaho Operations Office
MCL = maximum contaminant level
PCE = tetrachloroethene
TAN = Test Area North
TBD = to be determined
TCE = trichloroethene
VOC = volatile organic compound

2.1.4 Institutional Controls

Institutional controls consist of engineering and administrative controls to protect current and future users from health risks associated with (1) ingestion or inhalation of, or dermal contact with, contaminants in concentrations greater than the MCLs; (2) contaminants with greater than a 1×10^{-4} cumulative carcinogenic risk-based concentration; or (3) a cumulative hazard index of greater than 1, whichever is more restrictive (DOE-ID 2001a). The risk assessment is based on future residential use of this land. Institutional controls will be implemented until groundwater meets the RAOs and unrestricted land use is allowed (DOE-ID 2001a). The institutional controls for the ISB system are maintained in accordance with the *INEEL Sitewide Institutional Controls Plan* (DOE-ID 2004d). The Long-Term Stewardship Program is responsible for ensuring that the institutional controls are maintained (point of contact is Wendell Jolley [208-526-5990]).

2.1.4.1 Administrative Controls. Administrative controls include written notification of this remedial action in the *INEEL Sitewide Institutional Controls Plan* (DOE-ID 2004d). The notification includes the following elements:

- Prohibits installation of any drinking water wells accessing the aquifer within the contaminated plume and buffer zone, as described in the ROD Amendment (DOE-ID 2001a)

- Prohibits engaging in any activities that would interfere with the remedial activity

- Legible signs are placed on all groundwater wells installed within the area of contamination to indicate COCs and access restrictions.

2.1.4.2 Engineering Controls. Engineering controls consist of installing devices and controls to restrict access to water from within the contaminated plume. The devices include, but are not limited to, the following:

- Controlled access to the injection facility and the CERCLA waste storage areas (CWSAs) (with padlocks and locking doors)

- Controlled access to the well heads (with locking doors and/or well caps)

- Signs and postings at the ISB facility and the CWSAs (CERCLA signage is posted in accordance with 29 CFR 1910, "Occupational Safety and Health Standards")

- Postings on wellheads identifying potential hazards.

2.2 Construction

Construction activities associated with ISB at TAN include the construction of the ISB facility, installation of injection and monitoring wells, and construction of infrastructure to maintain institutional controls. Individual components of the ISB system are described in Section 2.1. Construction of the ISB facility began in October 2002 (DOE-ID 2004b) and the Agency final inspection occurred in October 2003, as documented in the ISB Final Inspection Report (ICP 2004a).

Construction quality control requirements and design specifications are described in the *In Situ Bioremediation Remedial Design, Test Area North, Operable Unit 1-07B* report (DOE-ID 2003). In summary, construction of the ISB system complies with the local building codes, as follows:

- Code of record: *International Building Code* 2000 edition (IBC 2000)
- International Building Code (IBC) occupancy class: F-2
- IBC construction class: Type IIB.

2.3 Operation and Maintenance Strategy

This section summarizes the O&M strategy for the ISB system. All ISB operations are performed in accordance with both CERCLA and INL work control requirements. The ISB O&M Plan (DOE-ID 2004a) addresses the activities and requirements for O&M. Individual technical procedures (TPRs) specify protocols and procedures necessary for ISB system operation. Aspects of ISB operations that are summarized in this section include routine operations (Section 2.3.1), maintenance (Section 2.3.2), and waste management (Section 2.3.3).

2.3.1 Routine Operations

Routine operations for the ISB system include amendment injection, sampling, and field laboratory procedures. The injection system has been used to deliver both sodium lactate and whey powder as electron donors. The equipment is used to mix high-concentration, aqueous-phase sodium lactate from 55-gal drums or 265-gal bulk containers with potable water at specific ratios. The equipment also is used to empty whey powder from 2,000-lb super sacks into the hopper and mix this solid electron donor with potable water at specific ratios. The field laboratory is routinely used during monitoring to perform field test kit analyses, sample preparations, sample storage, and to prepare samples for shipping/transportation.

The TPRs provide guidance for routine operations of the ISB system. Individual TPRs that support routine operations of the ISB system are listed in Table 5. These include procedures used for groundwater monitoring and injection of amendments. Groundwater monitoring includes sampling, field laboratory analyses, and operation of in situ instruments. Amendment injections include startup, operation, shutdown, and system equipment inspections and routine adjustments.

2.3.2 Maintenance

Procedures used for ISB maintenance activities have been developed and are listed in the ISB O&M Plan (DOE-ID 2004a). The maintenance strategy for the ISB system consists of periodic preventative maintenance and corrective maintenance, as needed. Preventative maintenance is performed on the pumps and flow control equipment, as recommended by the manufacturers. Maintenance activities for the ISB system include:

- **Safety Equipment Inspections**—Routine maintenance of eye wash bottles, portable fire extinguishers, and emergency lights, as well as the steps to be taken when an emergency indicator is triggered or abnormal conditions occur

- **Routine Maintenance**—Inspections and maintenance activities performed periodically of the ISB equipment

- **Corrective Maintenance**—Primarily consists of unplanned repairs or replacement of system components

- **Freeze Protection**—Measures taken after each injection event to remove all process water from the system components and piping that might otherwise be exposed to freezing.

2.3.3 Waste Management

The ISB Remedial Action Work Plan (DOE-ID 2004b) addresses the general requirements for all waste generated, including waste generated during O&M. The waste streams expected to be generated by ISB operations are:

- Nonhazardous CERCLA waste
- PPE
- Sampling purge water
- Laboratory waste (hazardous and nonhazardous).

Table 5. In situ bioremediation operations procedures.

ISB Operations Task	Operations Procedure
Injection of aqueous electron donor	TPR-6899, "In Situ Bioremediation Facility Aqueous Electron Donor Injection"
Injection of solid-phase electron donor	TPR-6900, "In Situ Bioremediation Facility Solid-Phase Electron Donor Injection"
Sampling	TPR-165, "Low-Flow Groundwater Sampling Procedure"
Laboratory	TPR-166, "In Situ Bioremediation Field Laboratory Procedure"
In situ instruments	TPR-6248, "Operable Unit 1-07B Hydrolab Operation and Maintenance"
In situ instruments	TPR-6247, "Operable Unit 1-07B TROLL 9000 Water Quality Probe Operation and Maintenance"
Sampling, in situ instruments, and water-level measurements	TPR-4907, "Installation and Removal of Equipment in Test Area North Wells"
Training requirements	PDD-125, "Operable Unit 1-07B Test Area North Groundwater Remediation Project Training Program"
Preventative maintenance	TPR-6901, "In Situ Bioremediation Facility Preventative Maintenance"
Inspection of safety equipment	TPR-6375, "Operable Unit 1-07B Facility Eye Wash, Emergency Light/Exit Sign, Fire Extinguisher, and First Aid Kit Inspection Procedure"
Data management	PLN-1750, "Data Management Plan Test Area North, Operable Unit 1-07B"

ISB = in situ bioremediation
PDD = program description document
PLN = plan
TPR = technical procedure

All waste generated during the operation of the ISB injection system is identified, characterized, containerized, labeled, handled, stored, and disposed of in a manner consistent with the Waste Management Plan (ICP 2005) and all other applicable requirements. The waste containers are inspected periodically, their locations are confirmed periodically, and the waste and inspection records are maintained.

2.3.4 Health and Safety

The *Test Area North Operable Unit 1-07B Final Groundwater Remedial Action Health and Safety Plan* (INEEL 2002a) establishes the procedures and requirements used to eliminate or minimize health and safety risks to personnel. These procedures and requirements were developed to include elements of the INL Voluntary Protection Program and the Integrated Safety Management System criteria, principles, and concepts to identify and mitigate hazards, thereby preventing accidents. The Voluntary Protection Program is focused on the people aspect of conducting work, and the Integrated Safety Management System focuses on the system side of conducting operations. No health and safety problems were encountered during construction or operation of the ISB remedial component. The required level of

PPE and site control and security requirements is stated in the Health and Safety Plan (INEEL 2002a) for the different activities performed during ISB operations.

2.4 Final Inspection

During the prefinal inspection, it was determined that construction of the ISB facility was complete and the ISB system was ready for operations. Therefore, the prefinal inspection became the final inspection, which took place from October 16–17, 2003. The ISB Final Inspection Report (ICP 2004a) documents the Agencies' concurrence that construction of the ISB facility is complete and the ISB system is ready for operations. The ISB system inspection was weighed against the operational requirements—as listed in TFR-2539, "Technical and Functional Requirements for the In Situ Bioremediation Design at TAN, OU 1-07B"—and was demonstrated to be able to meet these requirements. In addition to construction activities, the Agencies inspected the governing documents described in Section 1.4.2 and confirmed that these documents were sufficient to govern activities required for ISB operations, such as O&M and groundwater monitoring. Following the final inspection, the Agencies agreed that full-scale operations could begin.

2.5 Performance

The ISB system meets operational requirements defined in TFR-2539 that will enable the ISB remedial component to meet its objectives. As documented in the ISB Final Inspection Report (ICP 2004a), after ISB construction was complete, checkout component testing was performed on the system to ensure that the equipment was properly installed and operated in accordance with the design specifications. The component testing was followed by a management self-assessment and a system operability test using potable water to demonstrate proper operation of the injection system. These activities were followed by the final inspection, which is discussed in Section 2.4. The monitoring program (including the field laboratory) has also performed according to requirements, as defined in the governing documents, and the monitoring program has been successfully used to collect data in accordance with the strategy summarized in Section 2.1.3. Minor problems associated with equipment and operations of the ISB system are documented in the ISB Final Inspection Report and included in Appendix A of this report. Since operations began in October 2003, the ISB system has performed effectively.

3. OPERATIONAL AND FUNCTIONAL DETERMINATION

Pursuant to CERCLA regulations, "a remedy becomes 'operational and functional' either 1 year after construction is complete or when the remedy is determined concurrently by EPA and the state to be functioning properly and is performing as designed, whichever is earlier" (40 CFR 300.435 [f][2]). The ISB system has been operating for 1 year since completion of the final inspection. As stated, the ISB component is comprised of the necessary programs and infrastructure required to achieve the objectives of the ISB remedial component of the overall remedial action.

The ISB system (Section 2.1) is divided into four components: the ISB facility, ISB well network, monitoring program, and institutional controls. For each component, the actions performed during the 1-year timeframe following the final inspection in October 2003 are stated in Table 6. These actions demonstrate that the ISB system has been operating and functioning as expected for 1 year. Agency approval of this Interim Remedial Action Report will document that the ISB system is operational and functional.

Table 6. Operational and functional determination for the in situ bioremediation system.

ISB System Components	Actions Performed during the 1-Year Timeframe Following the ISB Final Inspection	Operational and Functional?
1. ISB Facility		
Injection equipment	Periodic continuous injections: Spaced 1 to 3 months apart Each injection lasted between 5 to 10 hours Four sodium lactate injections and one whey powder injection into TSF-05 Two sodium lactate injections into TAN-1859.	Yes
Field laboratory	Field laboratory was used to perform analyses, sample preparation, sample storage, and shipping preparations for 12 week-long sampling events and 9 single-day sampling events.	Yes
2. ISB Well Network		
	All wells were sampled during 12 week-long events and a subset of wells was sampled during 9 single-day events.	Yes
3. Monitoring Program		
Sampling strategy	Performance sampling was conducted as part of the initial operations phase.	Yes
Analytes	Samples were collected and analyses were performed for all analytes.	Yes
Quality assurance and quality control	Quality assurance and quality control requirements were met.	Yes
4. Institutional Controls		
Administrative controls	Administrative controls were implemented, as stated in Section 2.1.4.1 of this report.	Yes
Engineering controls	Engineering controls were implemented, as stated in Section 2.1.4.2 of this report.	Yes

ISB = in situ bioremediation
TAN = Test Area North
TSF = Technical Support Facility

4. SUMMARY OF PROJECT COSTS AND ENFORCEABLE MILESTONES

This section addresses cost, schedule, and deliverables for ISB remediation activities. The OU 1-07B ROD Amendment (DOE-ID 2001a) cost estimate (see Table 7), and the assumptions contained in the ROD Amendment, may be used for comparison throughout the project. Depending on the outcome of the specified ROD and Remedial Design/Remedial Action Scope of Work decision points

(DOE-ID 2001b), the actual remediation costs have been within -30 to +50% of the ROD cost estimate. A cost comparison of the current project baseline and the cost estimate presented in the OU 1-07B ROD Amendment also is included. Out-year funding availability for this project is subject to Congressional approval of DOE budgets; however, DOE has identified adequate funding in existing budget plans for this project.

Table 7. Operable Unit 1-07B remedial action cost summary.

Description	2004 Baseline Cost Estimate[a,b] (Using FY 1999 $)	ROD Amendment Cost Estimate[a] (FY 1999 $)
In Situ Bioremediation of the Hot Spot		
ISB design	152,645	9,097
ISB construction	1,178,936[c]	77,871
ISB O&M (FY 2004 to FY 2018)	1,761,059[d]	1,366,916
ISB D&D	29,692	29,692
Subtotal for ISB	3,122,332	1,483,576
Common elements (NPTF design, construction, and O&M; MNA construction and O&M; facility operations/waste management; GWTF D&D; miscellaneous items)	18,637,368	15,091,322
Total costs incurred through FY 1999	18,840,000	18,840,000
Total cost	40,599,700	35,414,898
Contingency	3,102,647	8,287,449
TOTAL	43,702,347	43,702,347

a. Dollars are net present value with a discount rate of 7%.

b. The baseline cost estimate includes actual cost through FY 2004 and estimated costs for FY 2005 through FY 2018 (except as noted).

c. Includes cost for office space, in accordance with the ISB Remedial Action Work Plan (DOE-ID 2004b), that was not included in the original cost estimate.

d. The ISB O&M cost included alternate electron donor testing and evaluation.

D&D = decontamination and decommissioning
DOE-ID = U.S. Department of Energy Idaho Operations Office
FY = fiscal year
GWTF = Groundwater Treatment Facility
ISB = in situ bioremediation
MNA = monitored natural attenuation
NPTF = New Pump and Treat Facility
O&M = operations and maintenance
ROD = Record of Decision

Table 8 identifies the documents and deliverables that are required by the Agencies for the ISB remedial component. This table identifies the document, document type, planned and enforceable due dates, and the date the document was actually submitted. To date, all required documents and deliverables for the ISB remedial component have been delivered on or ahead of schedule.

Table 8. Agency deliverable documents.

Deliverable	Planned Submittal Date	Enforceable Submittal Date	Review Duration (Days)	Document Type	Actual Delivery Date
Hot Spot Remediation					
ISB Technical and Functional Requirements	March 2002	N/A	30	Secondary	February 21, 2002
ISB Remedial Action Work Plan	July 2002	September 2002	45	Primary	July 31, 2002
ISB Prefinal Inspection Report	January 2004	March 2004	45	Primary	January 26, 2004
ISB Interim Remedial Action Report	September 2005	N/A	45	Primary	Current Document[c]
ISB Remedial Action Report	TBD	TBD	45	Primary	N/A[d]
ISB Performance Report	May 2002	N/A	INFO	External release	May 14, 2002
O&M Plan Revision[a]	TBD	TBD	45	Primary	N/A[d]
ISB Annual Performance Report	July/yearly	N/A	INFO	External Release	2003[e]
O&M Report[b]	TBD	TBD	45	Primary	N/A[d]

a. Deliverable date (to be determined) set in the ISB Remedial Action Report
b. Deliverable date set in the ISB O&M Plan (DOE-ID 2004a)
c. The current document meets the requirement for the ISB Interim Remedial Action Report.
d. The planned and enforceable due dates for these documents have not been determined. The documents will be submitted when appropriate.
e. This annual report has been submitted on time since completion of the OU 1-07B RD/RA Scope of Work.

DOE-ID = U.S. Department of Energy Idaho Operations Office
INFO = information
ISB = in situ bioremediation
N/A = not applicable
O&M = operations and maintenance
OU = operable unit
RD/RA = remedial design/remedial action
TBD = to be determined

Figure 3 (see Section 1) is an illustration of the current ISB remedial component implementation schedule. This schedule illustrates the expected and agreed-upon outcomes for each phase of the ISB remedial component. Currently, the project is in the second year of the initial operations phase.

5. OBSERVATIONS AND LESSONS LEARNED

Observations and lessons learned from selection of the ISB remedial component, as well as construction and operation of the ISB system, can be divided into the categories of technical and operational. The following sections document the key lessons learned from before the signature of the ROD (DOE-ID 1995) through present. This is a longer timeframe than the information stated in the remainder of this report, but it is necessary to document the chronology of events leading to the operational and functional ISB system implemented at TAN that enables use of bioremediation for chlorinated solvent source-area remediation.

5.1 Technical Perspective

Several significant technical accomplishments have been achieved during the initial evaluation, subsequent optimization, and current long-term implementation of the ISB remedial component. The following subsections discuss major areas of technical achievement that have significantly impacted ISB remedy implementation at TAN and have contributed to the current body of science for implementing ISB as a chlorinated solvent source-area remedy.

5.1.1 Site Conceptual Model Updates

Evaluation of the ISB technology at TAN began using the information compiled during the *Remedial Investigation Final Report with Addenda for the Test Area North Groundwater Operable Unit 1-07B at the Idaho National Engineering Laboratory* (Kaminski et al. 1994). Initial research into ISB revealed that the nature and scale of the RI/FS characterization data were not adequate to implement a field study of ISB at the TAN hot spot. Therefore, an iterative process was employed in which a site conceptual model for the hot spot was created with data gaps identified. Activities were conducted to fill those data gaps and an updated conceptual model was produced incorporating the new data. This process resulted in obtaining the required characterization data for field testing of ISB and resulted in an original site conceptual model document followed by three annual updates.

Lesson Learned: The site conceptual model created during the RI/FS stage was compiled independent of remedies that may be implemented and, because of this, is general in nature. For ISB at TAN, new characterization data were obtained specific to the hot spot area of the plume to iteratively update the site conceptual model.

5.1.2 Enhanced Dissolution

The most important technical achievement for ISB at TAN, other than the ability to stimulate complete dechlorination of TCE to ethene, is the demonstration of enhanced dissolution of the residual source. Results obtained during the field evaluation showed that aqueous TCE concentrations increased nearly 21-fold in response to lactate injections at one TAN monitoring location and that this newly mobilized TCE was highly bioavailable. The fact that field data indicated accelerated source degradation and subsequent dechlorination was achievable using ISB was an integral part for acceptance of ISB as the hot spot remedy.

Lesson Learned: Proper implementation of ISB using an electron donor with enhanced dissolution properties can accelerate source-area degradation compared with diffusion-limited processes.

5.1.3 Alternate Electron Donor Evaluation

Field testing and initial ISB optimization activities at TAN were conducted using sodium lactate as the electron donor. However, it was recognized that other electron donors may be more cost effective and/or may perform better than sodium lactate. To investigate this possibility, a series of laboratory studies was conducted. The results showed that whey powder had greater enhanced dissolution properties, stimulated comparable dechlorination efficiency, and cost less than sodium lactate and the other AEDs evaluated. Therefore, a field-scale optimization was recommended and is currently ongoing to determine whether whey powder can replace sodium lactate as the electron donor for long-term operations of ISB at TAN.

Lesson Learned: Site-specific evaluation of important electron donor properties can lead to selection of a high-performance and cost-effective electron donor.

5.1.4 Microbial Characterization

Microbial characterization has been conducted as part of ISB optimization activities at TAN. This characterization has been used to assess the effects of sodium lactate and whey powder injections in the field and to assess the performance of the various AEDs during the AED lab studies. Both community-level characterization and species-specific methods have been used. The community-level characterization has provided important information regarding shifts in the microbial community over time in response to electron donor additions. It has also revealed that competing biological reactions do not significantly hinder dechlorination efficiency and donor utilization efficiency in the TAN system. The species-specific characterization has provided the ability to track the proliferation of certain organisms that are known to perform complete dechlorination of TCE to ethene. Both types of characterization have provided valuable information that has been used to assess and even predict the response of the microbial community to operational changes.

Lesson Learned: Microbial characterization has allowed for the assessment of community dynamics in response to electron donor injections and has provided valuable information relating to donor utilization pathways, dechlorination efficiency, and the importance of competing biological reactions.

5.2 Operational Perspective

The approximately 6 years of ISB activities at TAN have resulted in a wealth of data relating to how the system can be manipulated and the corresponding response that might be expected. This section discusses important lessons learned related to ISB operations that have resulted in significant cost savings and have increased operational efficiency.

5.2.1 Amendment Delivery Systems

Two amendment delivery systems have been used during ISB operations at TAN. The first system consisted of a simple drum pump combined with plumbing from a potable water line for injection of sodium lactate. This was a low capital cost system that required fairly intensive labor resources to operate. It was used for injection into the TSF-05 well only and was capable of injecting a wide range of electron donor volumes and concentrations at variable frequencies. The second system, which has been built for long-term ISB operations, is a more complex and automated design capable of injecting both aqueous and solid-phase electron donor into up to three injection wells. A key feature of this system is the ability to

handle bulk containers of electron donor. This system also can be used to inject a wide range of electron donor volumes and concentrations at variable frequencies.

Lesson Learned: Both simple and complex designs for electron donor injection systems can be used effectively for ISB operations. A simple system involves lower capital and higher operational costs, while an automated system requires a higher capital investment but has lower operational costs and allows for more flexibility in injection strategies.

5.2.2 Extensive Use of Screening Data

It was recognized from the outset of ISB activities at TAN that a substantial volume of groundwater monitoring data would be required to assess the performance of ISB. It was also recognized that standard 35- to 40-day turnaround times for fixed laboratory analyses would not be adequate to make real-time operational decisions in the field and that paying for faster turnaround times would result in very high analytical expenses. Because of this, an approach has been employed that relies on the extensive use of screening-level data combined with definitive-level data that are used for confirmation of the screening results. Specifically, field test kits, in situ data (collected with multiparameter water quality instruments), and an innovative VOC analysis (solid-phase microextraction) are an integral part of ISB performance monitoring. This approach has resulted in the ability to cost effectively obtain near real-time data for assessment of ISB performance to optimize ISB operations.

Lesson Learned: Screening data, in situ data, and low-cost rapid turnaround onsite VOC analysis allow rapid field decisions to optimize ISB system operations and reduce the overall analytical cost.

5.2.3 Sampling and Analysis Optimization

Sampling frequency, analytes, and locations have been assessed periodically throughout ISB activities at TAN to ensure that the level of monitoring remains commensurate with the current phase of operations. In general, the amount of data required to assess ISB performance was high during the field evaluation stage and has been reduced as the ISB remedy has progressed through various stages of optimization and implementation. For example, since the field evaluation, sampling frequency has been reduced from biweekly to monthly and several field test kits and offsite split samples are no longer collected. These changes have resulted in a more cost-effective monitoring program that still provides adequate data for ISB performance assessment. The number of monitoring wells sampled and the frequency of sampling from these monitoring wells may also be decreased in the future as concentration trends following regular amendment injections are established and become more predictable.

On the other hand, sampling frequency, locations, and analytes have occasionally been increased in order to fill important data gaps. For example, in order to collect the data required to adequately compare the performance of whey powder to lactate during the AED optimization, additional sampling rounds have been added over the short term to provide the needed data.

Lesson Learned: The frequency, locations, and analytes included in an ISB monitoring program should be evaluated periodically to determine their utility for overall ISB operations. Eliminating unnecessary analytes, monitoring locations, and sampling rounds will result in cost savings. On the contrary, important data gaps can be filled by collecting additional data (if the need to do so is identified).

6. CONTACT INFORMATION

Table 9 provides contact information for project managers affiliated with the EPA, Idaho Department of Environmental Quality, DOE, and the major design and remediation contractor—CH2M-WG Idaho, LLC (CWI).

Table 9. Project managers with contact information.

Name	Affiliation	Address	Phone Number
Lee Nelson	CWI (design and remediation contractor) project manager	PO Box 1625 Mail Stop 3940 Idaho Falls, Idaho 83415	(208) 526-3093
Matt Wilkining	EPA project manager	1435 North Orchard Street Boise, Idaho 83706	(208) 378-5760
Margie English	Idaho Department of Environmental Quality project manager	1410 North Hilton Boise, Idaho 83706-1255	(208) 373-0306
Mark Shaw	DOE project manager	PO Box 1625 Mail Stop 1222 Idaho Falls, Idaho 83415	(208) 526-6442

CWI = CH2M-WG Idaho, LLC
DOE = U.S. Department of Energy
EPA = U.S. Environmental Protection Agency

7. REFERENCES

29 CFR 1910, 2005, "Occupational Safety and Health Standards," *Code of Federal Regulations*, Office of the Federal Register, March 2005.

40 CFR 300, 2005, "National Oil and Hazardous Substances Pollution Contingency Plan," *Code of Federal Regulations*, Office of the Federal Register, June 2005.

40 CFR 300.435, 2005, "Remedial Design/Remedial Action, Operation and Maintenance," *Code of Federal Regulations*, Office of the Federal Register, June 2005.

42 USC § 9601 et seq., 1980, "Comprehensive Environmental Response, Compensation and Liability Act of 1980 (CERCLA/Superfund)," *United States Code,* December 11, 1980.

DOE-ID, 1987, *Consent Order and Compliance Agreement,* U.S. Department of Energy Idaho Operations Office; U.S. Environmental Protection Agency, Region 10; and the U.S. Geological Survey, July 10, 1987.

DOE-ID, 1991, *Federal Facility Agreement and Consent Order for the Idaho National Engineering Laboratory,* Administrative Docket No. 1088-06-29-120, U.S. Department of Energy Idaho Operations Office; U.S. Environmental Protection Agency, Region 10; Idaho Department of Health and Welfare, December 4, 1991.

DOE-ID, 1995, *Record of Decision Declaration for the Technical Support Facility Injection Well (TSF-05) and Surrounding Groundwater Contamination (TSF-23) and Miscellaneous No Action Sites Final Remedial Action*, Document ID: 10139, Rev. 0, U.S. Department of Energy Idaho Operations Office, August 1995.

DOE-ID, 1997a, *Technology Evaluation Work Plan Test Area North Final Groundwater Remediation Operable Unit 1-07B*, DOE/ID-10562, Rev. 0, U.S. Department of Energy Idaho Operations Office, March 1997.

DOE-ID, 1997b, *Remedial Design/Remedial Action Scope of Work Test Area North Final Groundwater Remediation Operable Unit 1-07B,* DOE/ID-10522, Rev. 5, U.S. Department of Energy Idaho Operations Office, August 1997.

DOE-ID, 1998, *Enhanced In Situ Bioremediation Field Evaluation Work Plan, Test Area North, Operable Unit 1-07B*, DOE/ID-10639, Rev. 0, U.S. Department of Energy Idaho Operations Office, September 1998.

DOE-ID, 2000, *Field Demonstration Report, Test Area North Final Groundwater Remediation, Operable Unit 1-07B,* DOE/ID-10718, Rev. 0, U.S. Department of Energy Idaho Operations Office, March 2000.

DOE-ID, 2001a, *Record of Decision Amendment Technical Support Facility Injection Well (TSF-05) and Surrounding Groundwater Contamination (TSF-23) and Miscellaneous No Action Sites, Final Remedial Action*, DOE/ID-10139 Amendment, Rev. 0, U.S. Department of Energy Idaho Operations Office, September 2001.

DOE-ID, 2001b, *Remedial Design/Remedial Action Scope of Work Test Area North Final Groundwater Remediation Operable Unit 1-07B*, DOE/ID-10905, Rev. 1, U.S. Department of Energy Idaho Operations Office, November 2001.

DOE-ID, 2003, *In Situ Bioremediation Remedial Design, Test Area North, Operable Unit 1-07B*, DOE/ID-11013, Rev. 0, U.S. Department of Energy Idaho Operations Office, January 2003.

DOE-ID, 2004a, *In Situ Bioremediation Operations and Maintenance Plan for Test Area North, Operable Unit 1-07B,* DOE/ID-11012, Rev. 2, U.S. Department of Energy Idaho Operations Office, July 2004.

DOE-ID, 2004b, *In Situ Bioremediation Remedial Action Work Plan for Test Area North Final Groundwater Remediation, Operable Unit 1-07B*, DOE/ID-11015, Rev. 2, U.S. Department of Energy Idaho Operations Office, July 2004.

DOE-ID, 2004c, *Quality Assurance Project Plan for Waste Area Groups 1, 2, 3, 4, 5, 6, 7, 10, and Deactivation, Decontamination, and Decommissioning*, DOE/ID-10587, Rev. 8, U.S. Department of Energy Idaho Operations Office, March 2004.

DOE-ID, 2004d, *INEEL Sitewide Institutional Controls Plan,* DOE/ID-11042, Rev. 1, U.S. Department of Energy Idaho Operations Office, June 2004.

EPA, 1994, *Guidance for the Data Quality Objectives Process*, EPA QA/G-4, EPA/600/R-96/055, U.S. Environmental Protection Agency, September 1994.

EPA, 2000, *Close Out Procedures for National Priorities List Sites,* EPA 540-R-98-016, OSWER Directive 9320.2-09A-P, Office of Emergency and Remedial Response, U.S. Environmental Protection Agency, January 2000.

EPA, 2001, *Operation and Maintenance in the Superfund Program*, EPA 540-F-01-004, OSWER Directive 9200.1-37FS, Office of Solid Waste and Emergency Response, U.S. Environmental Protection Agency, May 2001.

IBC, 2000, *International Building Code,* First Edition, ISBM 1892395258, International Code Council, Falls Church, Virginia.

ICP, 2004a, *In Situ Bioremediation Final Inspection Report*, ICP/EXT-03-00116, Rev. 0, Idaho Completion Project, January 2004.

ICP, 2004b, *Alternate Electron Donor Optimization Plan for ISB Operations at Test Area North Operable Unit 1-07B*, ICP/EXT-04-00243, Rev. 0, Idaho Completion Project, March 2004.

ICP, 2004c, *Fiscal Year 2003 Alternate Electron Donor Evaluation, Test Area North Final Remedy, Operable Unit 1-07B,* ICP/INT-04-02077, Rev. 0, Idaho Completion Project, September 2004.

ICP, 2005, *Waste Management Plan for Test Area North Final Groundwater Remediation Operable Unit 1-07B*, INEEL/EXT-98-00267, Rev. 5, Idaho Completion Project, April 2005.

INEEL, 1997, *Explanation of Significant Differences from the Record of Decision for the Technical Support Facility Injection Well (TSF-05) and Surrounding Groundwater Contamination (TSF-23) and Miscellaneous No Action Sites, Final Remedial Action Operable Unit 1-07B Waste Area Group 1*, INEEL/EXT-97-00931, Rev. 0, Idaho National Engineering and Environmental Laboratory, November 1997.

INEEL, 1999, *Fiscal Year 1998 Groundwater Monitoring Annual Report Test Area North, Operable Unit 1-07B*, INEEL/EXT-99-00011, Rev. 0, Idaho National Engineering and Environmental Laboratory, March 1999.

INEEL, 2000, *Field Evaluation Report of Enhanced In Situ Bioremediation, Test Area North, Operable Unit 1-07B*, INEEL/EXT-2000-00258, Rev. 0, Idaho National Engineering and Environmental Laboratory, July 2000.

INEEL, 2001, *In Situ Bioremediation Predesign Operations Work Plan Test Area North, Operable Unit 1-07B*, INEEL/EXT-2000-00647, Rev. 1, Idaho National Engineering and Environmental Laboratory, April 2001.

INEEL, 2002a, *Test Area North Operable Unit 1-07B Final Groundwater Remedial Action Health and Safety Plan*, INEEL/EXT-99-00020, Rev. 2, Idaho National Engineering and Environmental Laboratory, November 2002.

INEEL, 2002b, *Interim Decontamination Plan for Operable Unit 1-07B,* INEEL/EXT-97-01287, Rev. 4, Idaho National Engineering and Environmental Laboratory, May 2002.

INEEL, 2003, *In Situ Bioremediation Remedial Action Groundwater Monitoring Plan for Test Area North, Operable Unit 1-07B*, INEEL/EXT-2002-00779, Rev. 2, Idaho National Engineering and Environmental Laboratory, December 2003.

INEL, 1994, *Remedial Investigation Final Report with Addenda for the Test Area North Groundwater Operable Unit 1-07B at the Idaho National Engineering Laboratory,* EGG-ER-10643, Rev. 0, Volumes 1 and 2, Idaho National Engineering Laboratory, January 1994.

Kaminski, J. F., K. N. Keck, A. L. Schafer-Perini, C. F. Hersley, R. P. Smith, G. J. Stormberg, and A. H. Wylie, 1994, *Remedial Investigation Final Report with Addenda for the Test Area North Groundwater Operable Unit 1-07B at the Idaho National Engineering Laboratory*, EGG-ER-10643, Rev. 0, Volumes 1 and 2, Idaho National Engineering Laboratory, January 1994.

National Research Council, 1994, *Alternatives for Ground Water Cleanup*, National Academy Press, Washington, D.C., p. 315.

PDD-125, 2003, "Operable Unit 1-07B Test Area North Groundwater Remediation Project Training Program," Rev. 0, Idaho Completion Project, October 2003.

PLN-1750, 2005, "Data Management Plan Test Area North, Operable Unit 1-07B," Rev. 0, Idaho Completion Project, March 2005.

TFR-2539, 2002, "Technical and Functional Requirements for the In Situ Bioremediation Design at TAN, OU 1-07B," Rev. 0, Idaho National Engineering and Environmental Laboratory, March 2002.

TPR-165, 2004, "Low-Flow Groundwater Sampling Procedure," Rev. 9, Idaho Completion Project, November 2004.

TPR-166, 2004, "In Situ Bioremediation Field Laboratory Procedure," Rev. 6, Idaho Completion Project, November 2004.

TPR-4907, 2004, "Installation and Removal of Equipment in TAN Wells," Rev. 1, Idaho Completion Project, November 2004.

TPR-6247, 2004, "Operable Unit 1-07B TROLL 9000 Water Quality Probe Operation and Maintenance," Rev. 1, Idaho Completion Project, November 2004.

TPR-6248, 2004, "Operable Unit 1-07B Hydrolab Operation and Maintenance," Rev. 1, Idaho Completion Project, November 2004.

TPR-6375, 2004, "Operable Unit 1-07B Facility Eye Wash, Emergency Light/Exit Sign, Fire Extinguisher, and First Aid Kit Inspection Procedure," Rev. 1, Idaho Completion Project, January 2004.

TPR-6899, 2004, "In Situ Bioremediation Facility Aqueous Electron Donor Injection," Rev. 2, Idaho Completion Project, July 2004.

TPR-6900, 2004, "In Situ Bioremediation Facility Solid-Phase Electron Donor Injection, Rev. 3, Idaho Completion Project, October 2004.

TPR-6901, 2004, "In Situ Bioremediation Facility Preventative Maintenance," Rev. 1, Idaho Completion Project, February 2004.

Appendix A

Final Inspection Details

Appendix A

Final Inspection Details

Table A-1 below lists the minor problems associated with equipment and operations of the in situ bioremediation system that resulted from the system walk-down and Agency inspection during the prefinal inspection conducted on October 16–17, 2003 (ICP 2004a). Along with each issue listed is a resolution and status. For any issue not yet completed, a scheduled completion date is provided.

Table A-1. Agency inspection issues and status.

Inspection Checklist Item No.	Issue	Resolution	Status
1.j	IDEQ 2: The ISB building lacked heat tape on the gutters and drain spouts, which could allow ice buildup during winter in the gutters causing unwanted discharge or flooding in the building.	Heat tape and a diffuser will be added to the gutters and drain spouts to prevent ice buildup during winter.	Delayed—will be completed in June 2005.
2.e	EPA 1: Operating procedures were not field tested for efficiency as the operator needed to leave the building to check on the water supply and the valving of the injection well at separate points in the procedures. Also no final procedures set for valve setting after injection of electron donor was complete.	Agree. Amendment injection procedures will be modified to reduce the number of times operators need to leave the building to no more than once. This modified valve lineup will be moved to the prerequisite section of the procedure. In addition, the valve setting required for a safe shutdown condition after injection is complete will be added to the injection procedures.	Completed
4.c	EPA 2: The fire extinguisher in process building inspection was not up to date.	The fire extinguisher has been mounted and a current inspection sticker has been attached.	Completed
4.d	IDEQ 5: Lack of phones in the designated areas, especially by the emergency phone number list. EPA 5: Lack of phones in the designated areas. However, two-way radios were evident.	The phone in the laboratory trailer will be relocated into the in situ bioremediation facility and placed near the emergency phone number list.	Completed
4.h	EPA 3: Equipment spares were not located on-site, nor were there any inspection procedures established for ensuring their presence.	There are a limited number of spares required for operation of the facility (see Appendix B). These are currently on order and will be stored in the in situ bioremediation facility. A line item (and inspection log) will be added to the injection procedures to check for the presence of spares for the facility after each injection.	Completed

Table A-1. (continued).

Inspection Checklist Item No.	Issue	Resolution	Status
Non-checklist items			
x.1	IDEQ 1: Potential problems with the pressure relief valve by the injection pump. As observed, there was no protection for the operator if the valve was accidentally opened with someone in front of it.	Piping will be added to the outlet of the pressure relief valve to direct flow to the ground and away from the operator.	Completed
x.2	IDEQ 3: The laboratory in the ISB building was not operational during our inspection. Therefore, the Agencies could not evaluate the effectiveness or potential deficiencies in the lab. The temporary laboratory trailer did meet the requirements of the inspection checklist. It is assumed the permanent lab will be set up as efficiently.	Equipment from the laboratory trailer was moved into the new facility on November 13, 2003. Operations in the lab are expected to be as efficient as they have been in the laboratory trailer.	Completed
x.3	Well house inspections not defined.	Well houses will be added to the inspection procedure.	Completed
x.4	CERCLA Waste Storage Unit (CWSU) inspection logs not available.	The CWSU inspection logs from the week of October 10, 2003, are provided in the ISB Final Inspection Report (ICP 2004a)	Completed
x.5	Current pump does not require priming.	Technical procedure will be changed to remove the pump priming step.	Completed