Appendix H

Sequencing Sketches

Index

PM-2A Tanks Remediation

PM-2A Elevation Sketch H-5

Stage 1 – Utility Isolation / Removal H-6

Stage 2 – Initial Excavation H-7

Stage 3 – Tank Excavation H-8

Stage 4 – Final Tank Excavation H-9

Stage 5 – Preparation for Tank Dismantlement H-10

Stage 6 – Initial Tank Dismantlement H-11

Stage 7 – Final Tank Dismantlement H-12

Stage 8 – Install Waste Collection System H-13

Stage 9 – Waste Removal Operations H-14

Stage 10 – Removal of Temporary Enclosure During Tank Dismantlement H-15

Stage 11 – Installation of Waste Collection System H-16

Stage 12 – Waste Removal Operations H-17

Stage 13 – Dismantle Waste removal System H-18

Stage 14 – Removal of Temporary Enclosure During Tank V14 Dismantlement H-19

Stage 15 – Area Ready for Final Sampling/Cleanup H-20

Stage 16 – Mass Backfill Operations H-21

Stage 17 – Complete Mass Backfill Operations H-22

Stage 18 – Final Grading and Contouring H-23

TSF-03 Burn Pit Remediation

TSF-03 Burn Pit General Area H-24

Stage 1 ..... H-25

Stage 2 ..... H-26

Stage 3 ..... H-27

Stage 4 ..... H-28

Stage 5 ..... H-29

Stage 6 & 7 ..... H-30

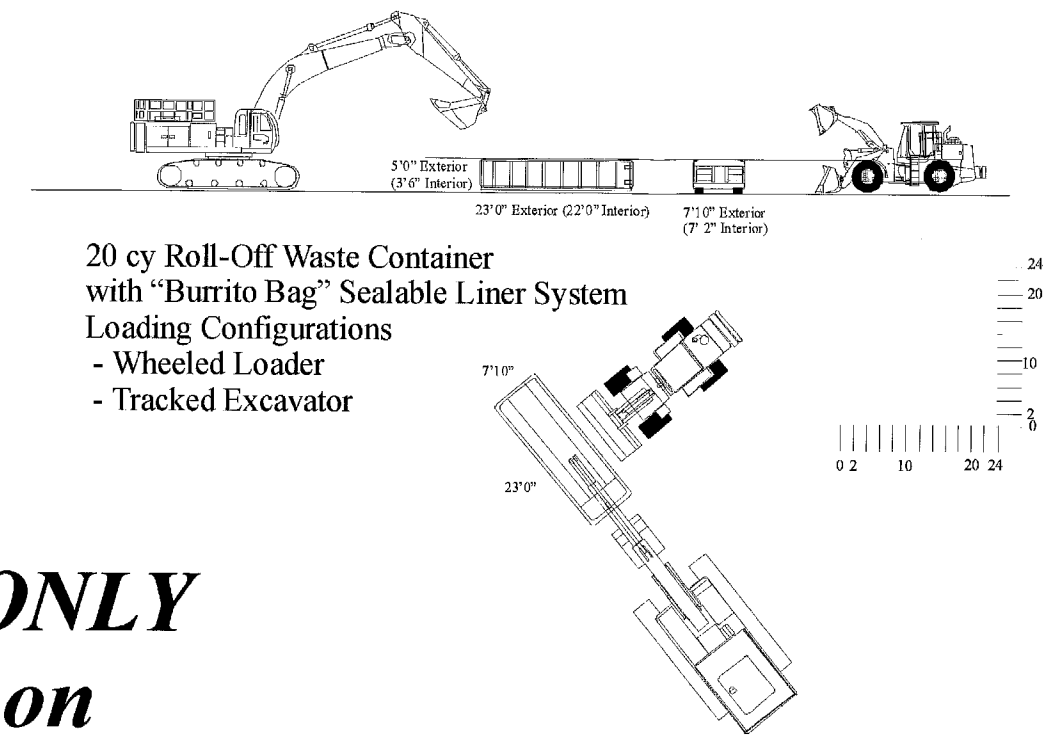

Sequencing Sketches - For Information ONLY
See Engineering Drawings for Details on Excavation Configuration and Utility Layouts

OU 1-10 PM2A Tanks
RD/RA Work Plan - Design
Excavation Limits
Section B-B

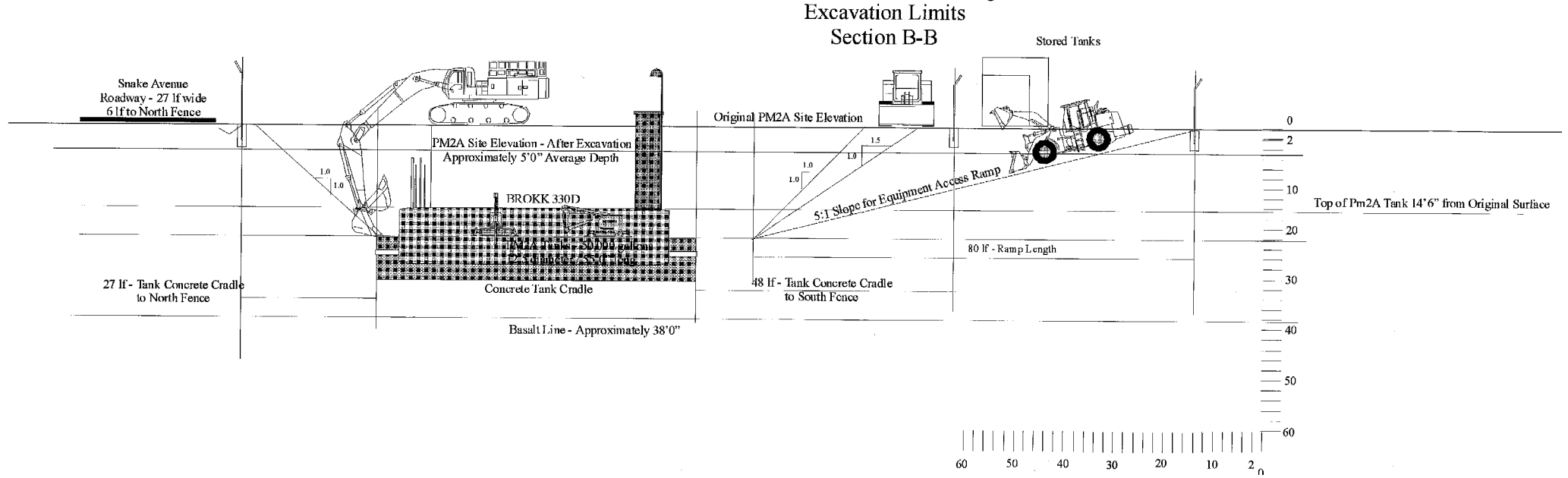

Stage 1 - Utility Isolation / Removal

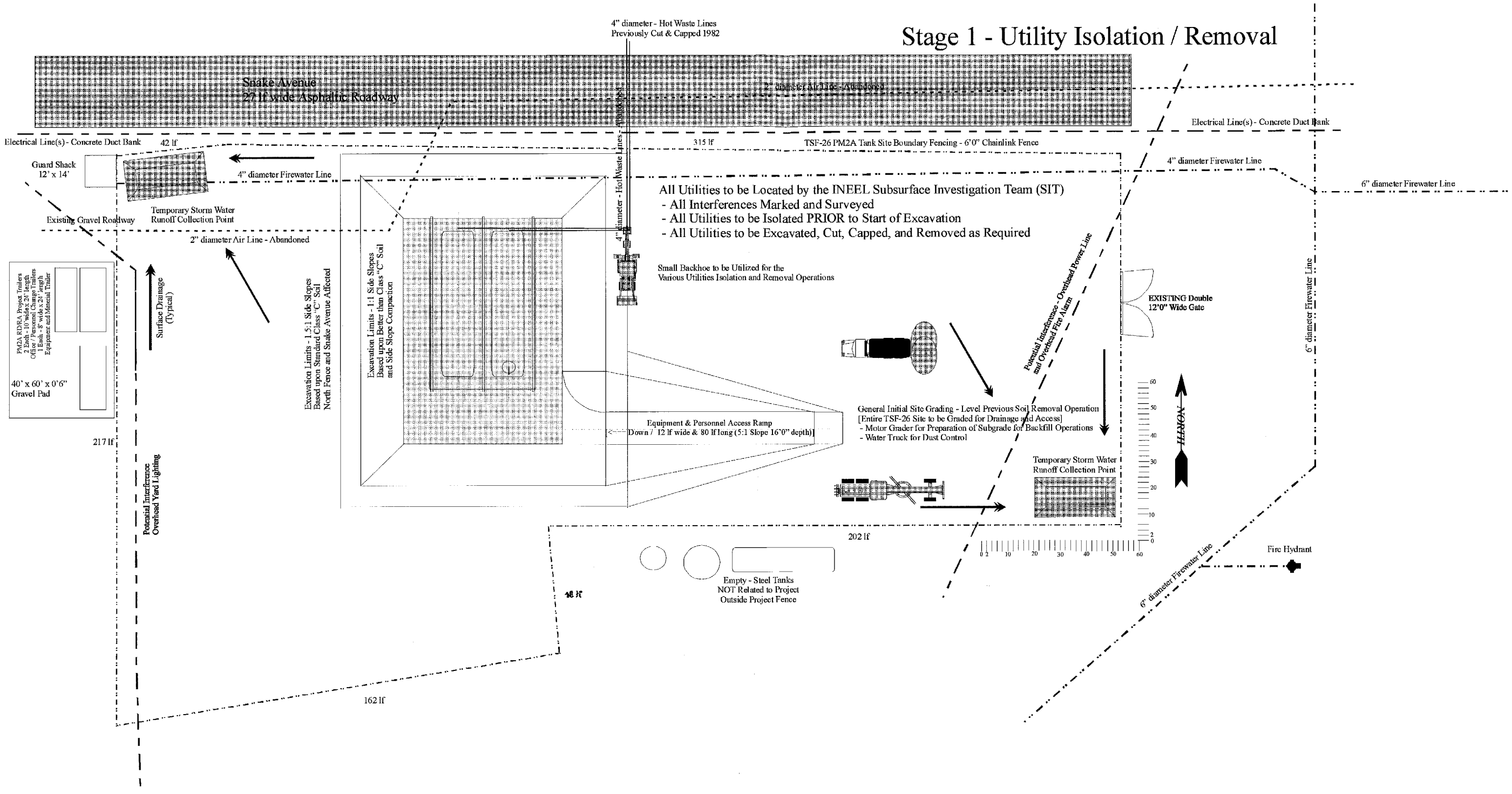

Stage 2 - Initial Excavation

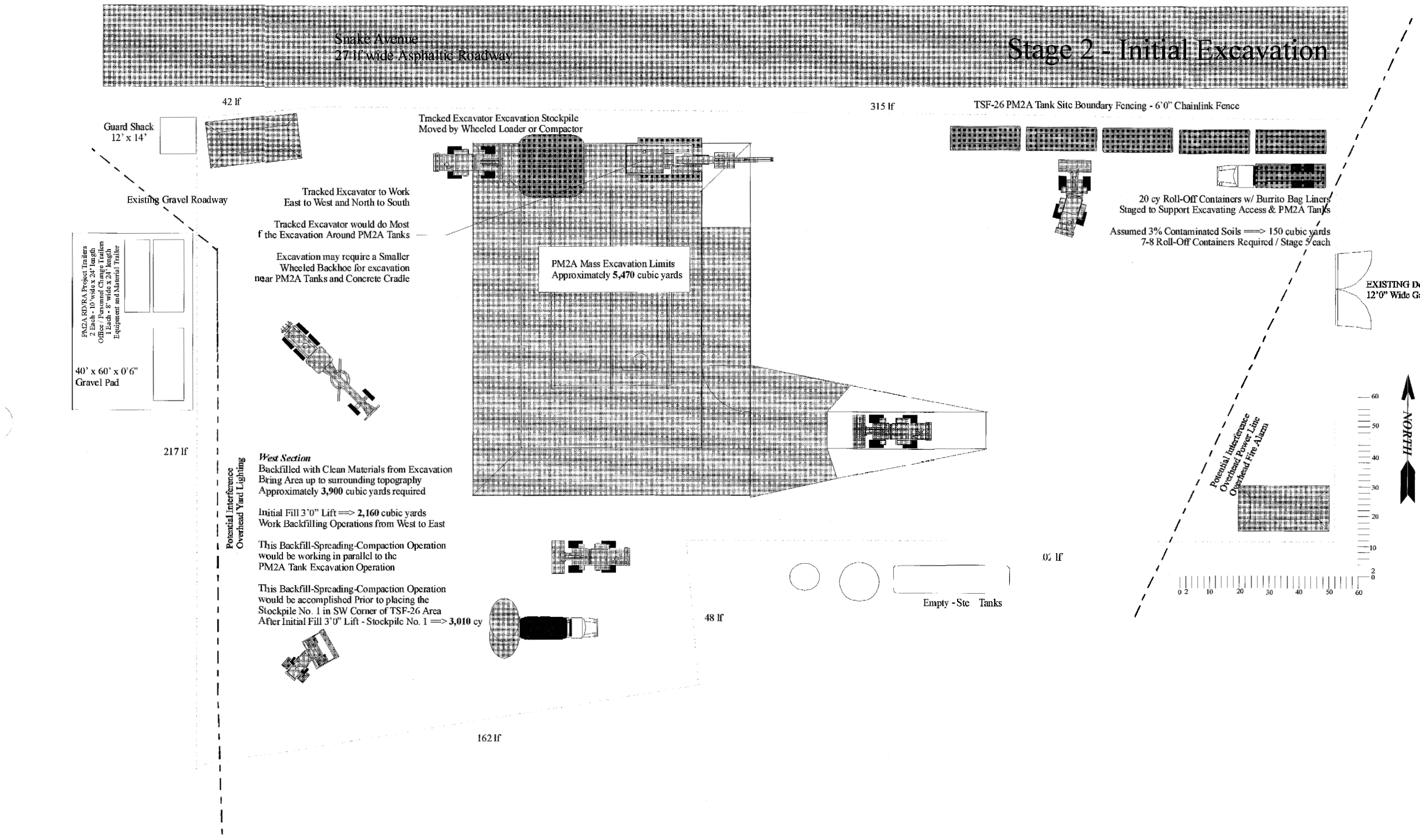

Stage 3 - Tank Excavation

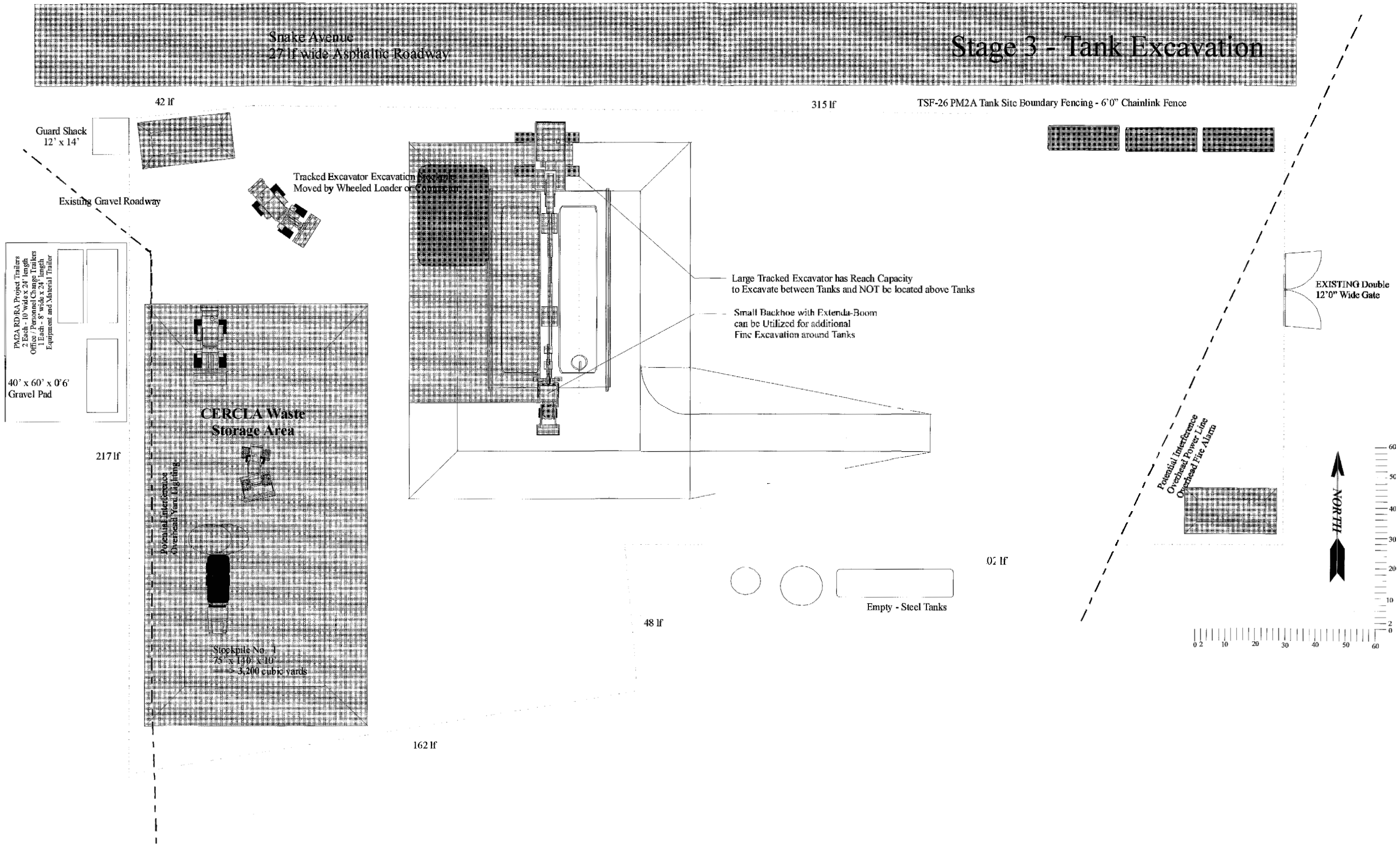

Stage 4 - Final Tank Excavation

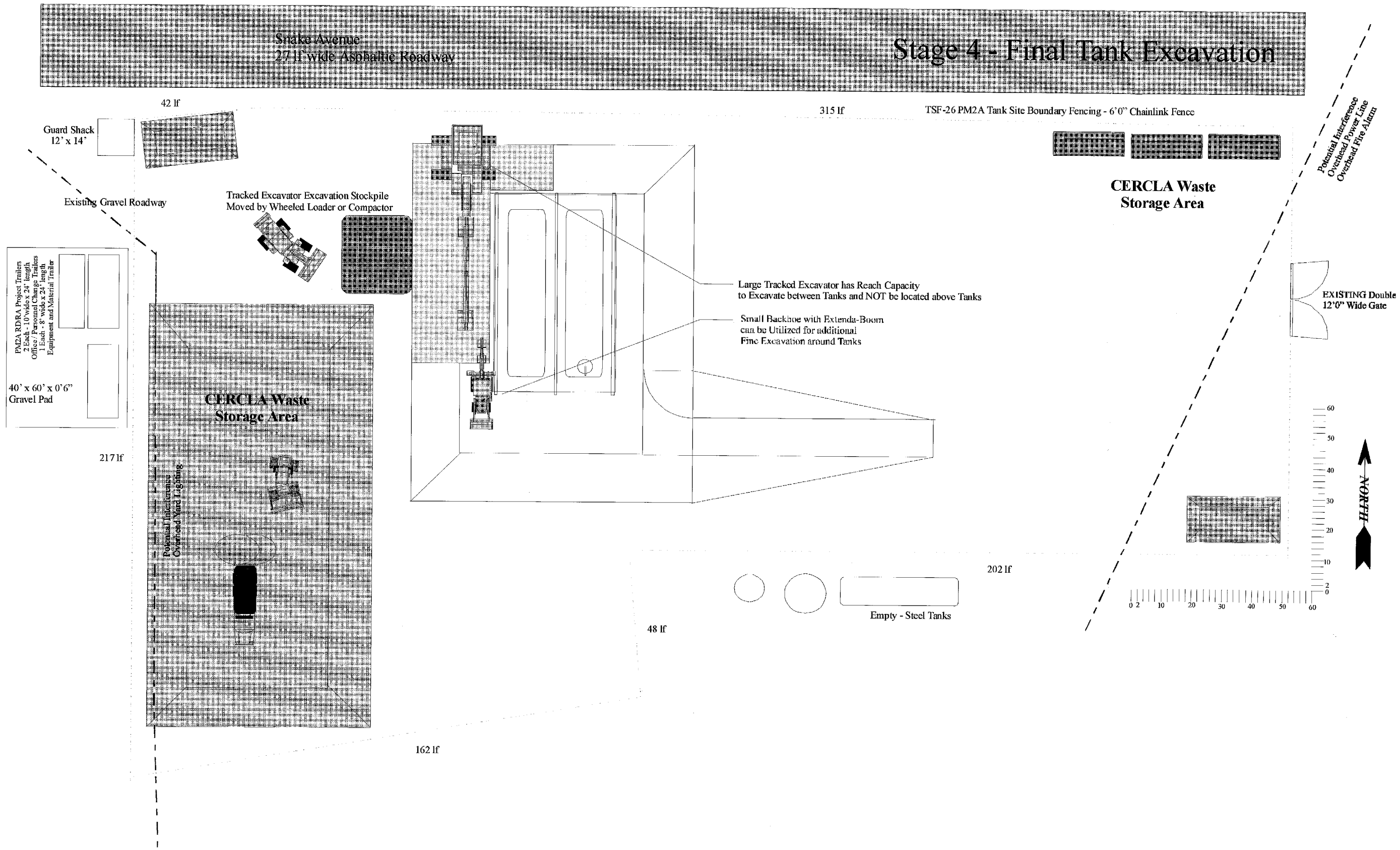

Stage 5 - Preparation for Tank Dismantlement

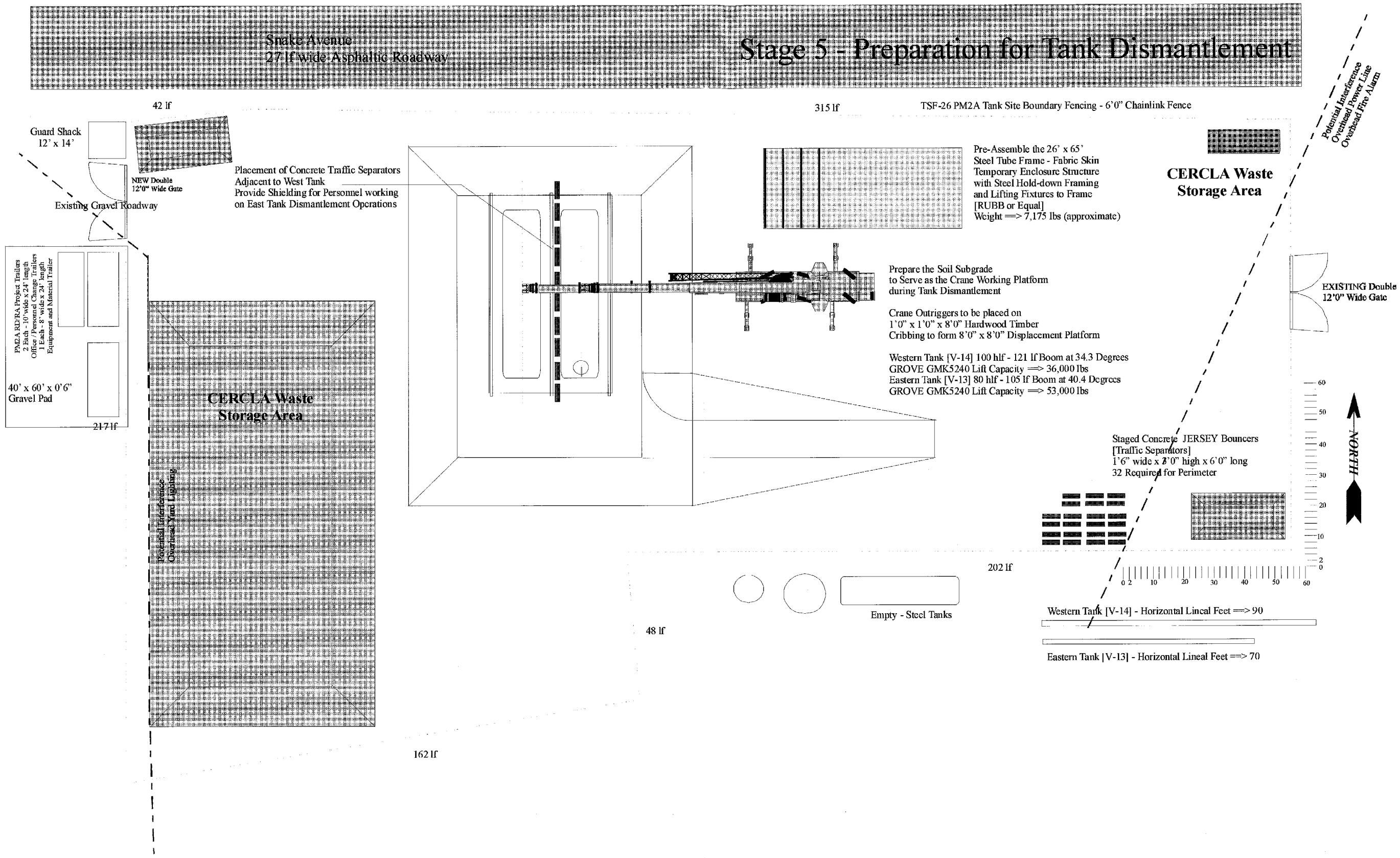

Stage 6 - Initial Tank Dismantlement

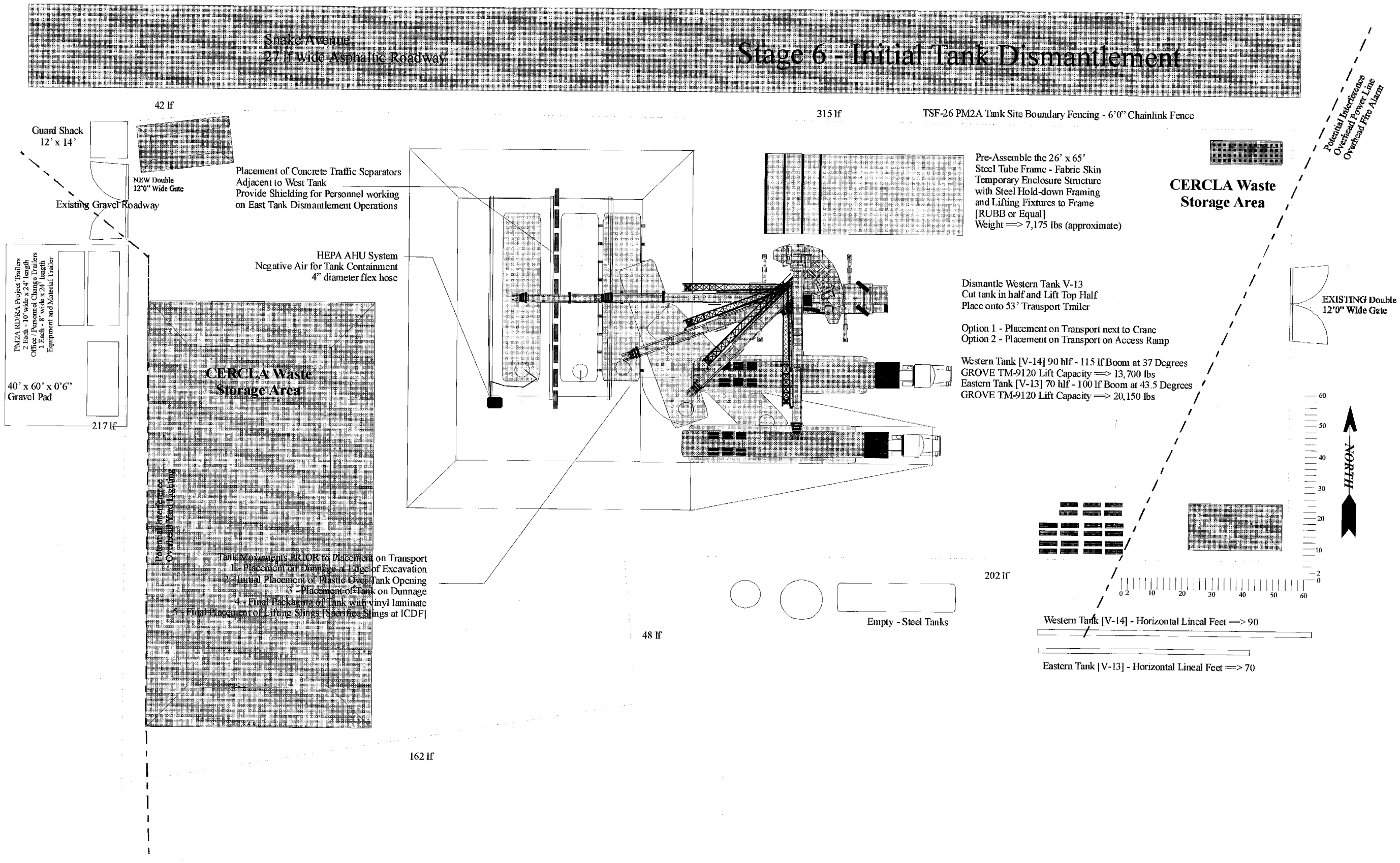

Stage 7 - Final Tank Dismantlement
- Placement of Temporary Containment Structure

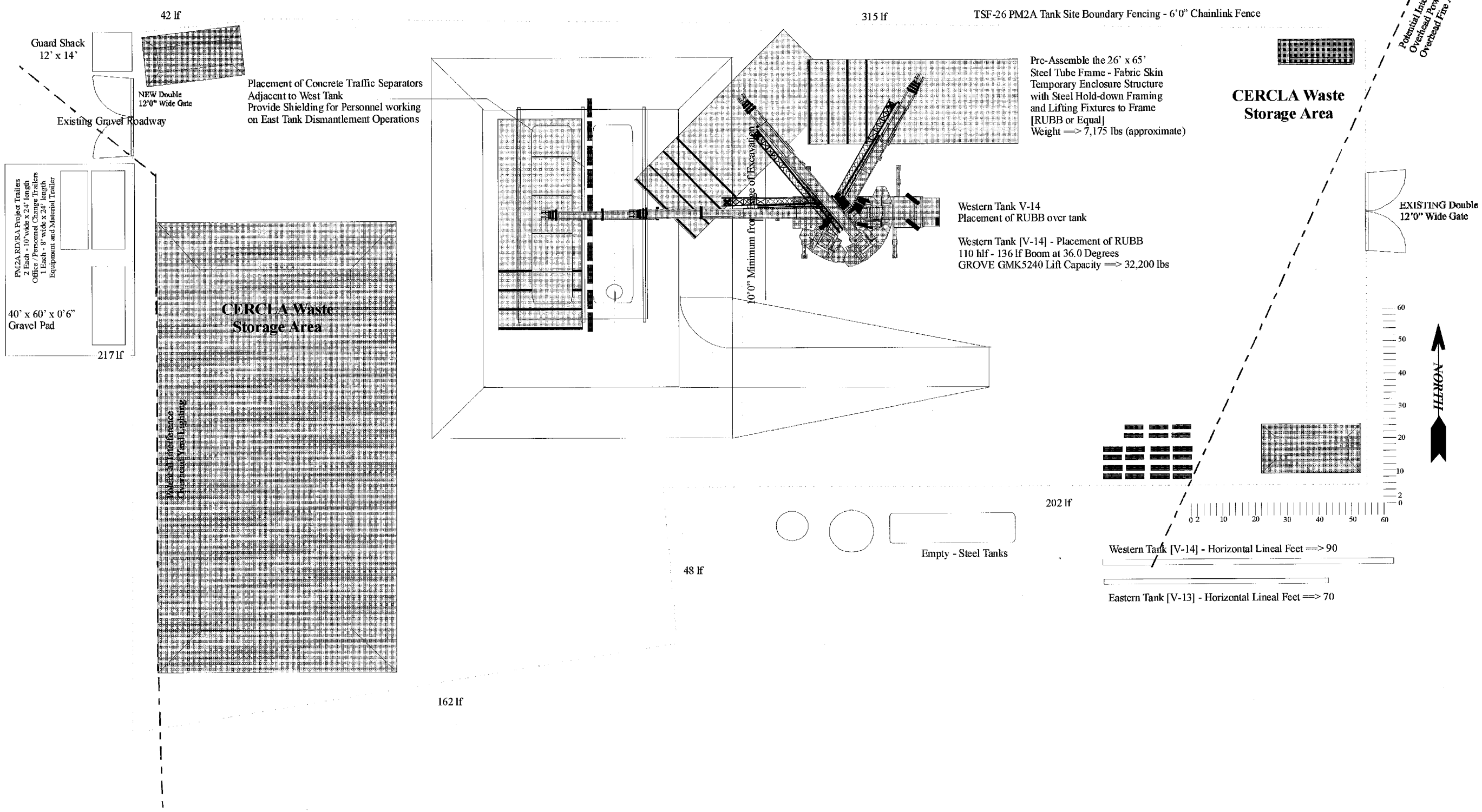

Stage 8 - Install Waste Collection System - Placement of BROKK 330D

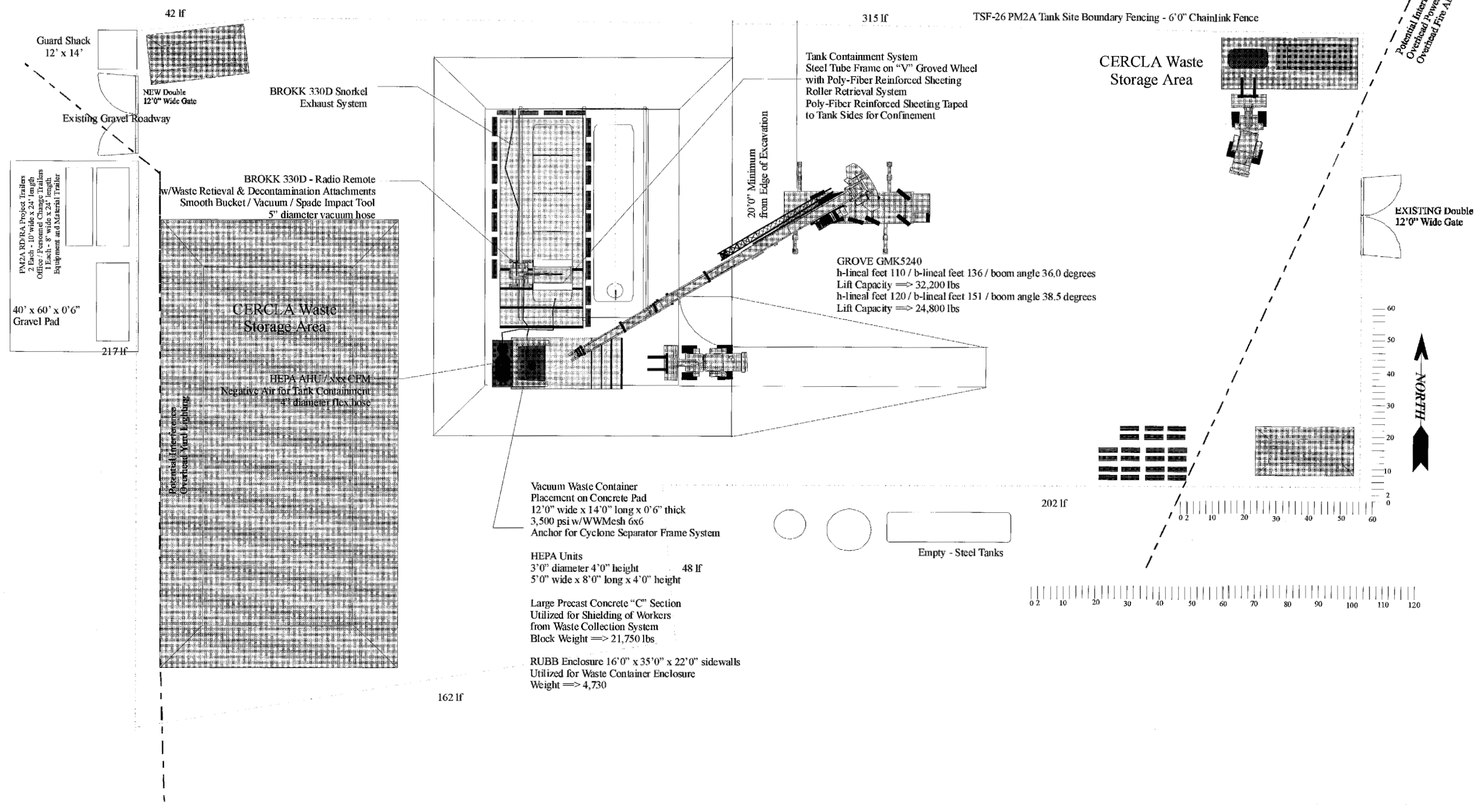

Stage 9 - Waste Removal Operations
- Tank Decontamination Operations

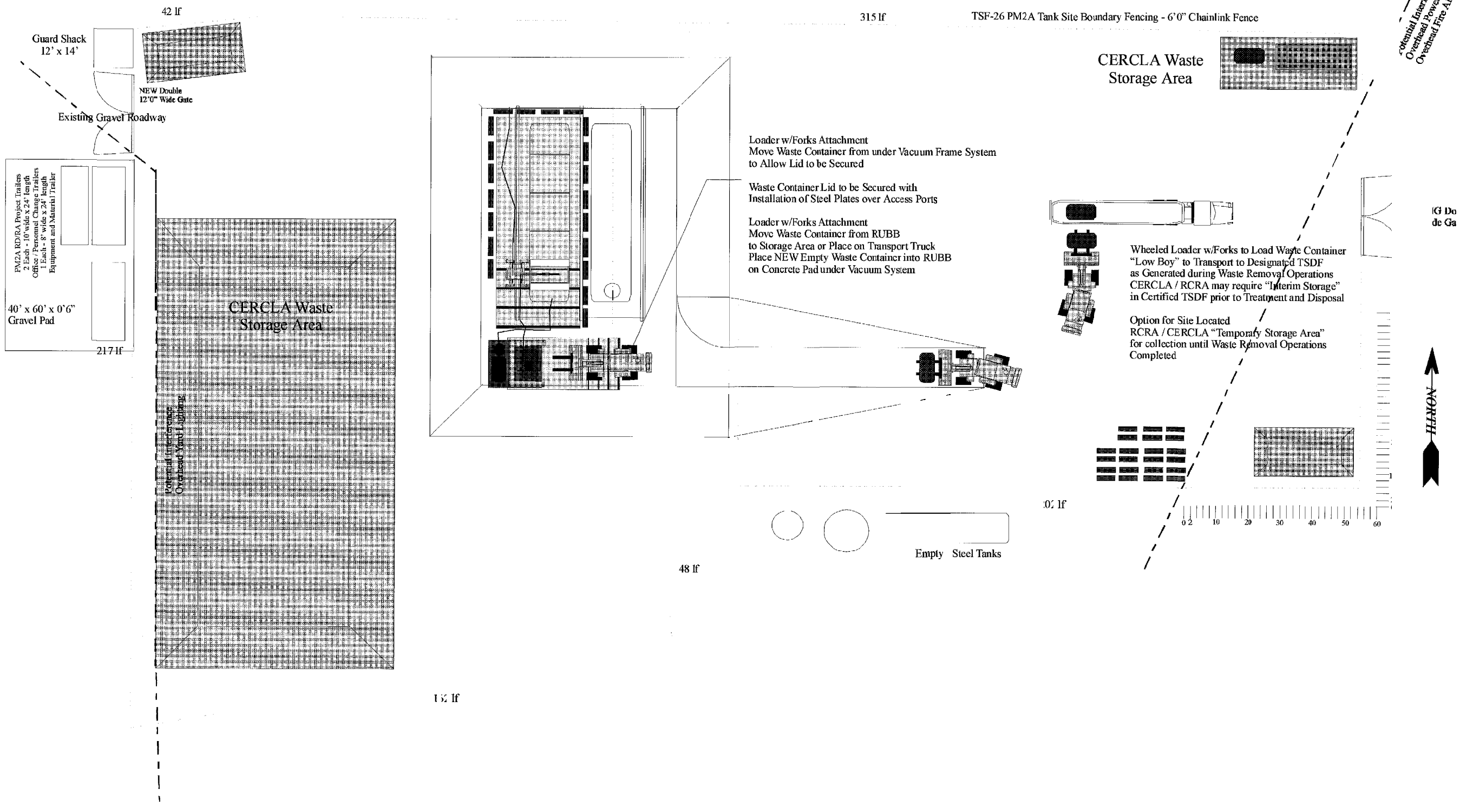
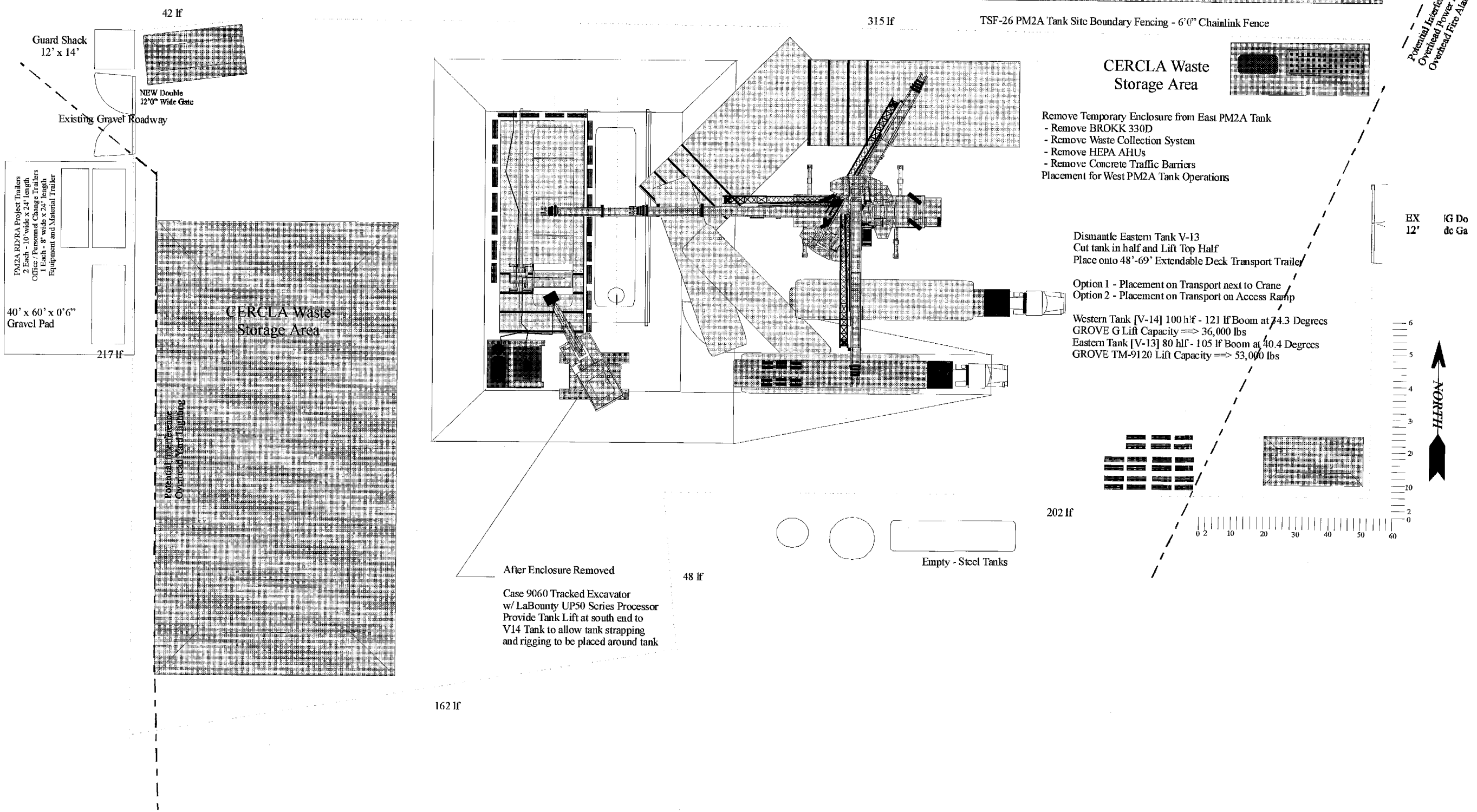
Stage 10 - Removal of Temporary Enclosure - Tank Dismantlement / Sizing