Document ID:PEI-EDF-1006
Revision ID:0
Effective Date:05/12/04

Engineering Design File

PM-2A Tank Weight Evaluation

Portage Project No.: 2073.00
Project Title: PM-2A Remediation Phase I

Portage ENVIRONMENTAL

TEM-0104
03/30/2004
Rev. 0

ENGINEERING DESIGN FILE

1. Portage Project No.: 2073.00 2. Project/Task: PM-2A Remediation Phase 1

3. Subtask: PM-2A Tank Weight Evaluation

4. Title: PM-2A Tank Weight Evaluation

5. Summary:

This engineering design file evaluates the weight of the PM-2A tanks for purposes of lifting, transporting, and storage in the TAN-607A High Bay.

6. Distribution: (Portage Environmental, Inc.)

Lisa Aldrich, PEI Document Control (Original)
Brady J. Orchard, P.E.
Clement B. Potelunas, P.E.
Ray G. Schwaller, P.E.
Jeff A. Towers

7. Review (R) and Approval (A) Signatures:
(Identify minimum reviews and approvals. Additional reviews/approvals may be added.)

	R/A	Printed Name/ Organization	Signature	Date
Author	A	Jeff A. Towers		5-12-04
Independent Review	R	Nathan M. Wheldon, P.E.		5-12-04
Project Manager	R/A	Brady J. Orchard, P.E.		05/12/04

PROFESSIONAL ENGINEER
REGISTERED
10393
STATE OF IDAHO
BRADY J. ORCHARD

REVISION: 0
ORIGINAL SIGNED BY: Brady J. Orchard, PE
SEAL NUMBER: 10393
DATE ORIGINAL SIGNED: 05/12/04
ORIGINAL STORED AT: Portage Environmental, Inc.; Idaho Falls, ID

CONTENTS

1. INTRODUCTION AND PURPOSE 3

2. BACKGROUND 3

3. CALCULATIONS 3

3.1 Tank Weight 3

3.2 Weight of the Asphalt Coating 4

3.3 Sludge Weight 4

3.4 Lifting Hardware 5

4. CONCLUSION 5

5. REFERENCES 5

1. INTRODUCTION AND PURPOSE

This engineering design file (EDF) evaluates the weight of the PM-2A tanks (V-13 and V-14) for purposes of lifting them from their current location in the TSF-26 site and placing them on a transporter, transporting them to the TAN-607A High Bay, and placing them in storage. The calculations also provide an independent verification of the preliminary weight calculations completed by Intrepid Technology & Resources, Inc., and estimated maximum tank weights specified in Bechtel BWXT Idaho, LLC technical and functional requirements (TFR) document, TFR-234, "Technical and Functional Requirements for the Remediation of PM-2A Tanks, TSF-26, Operable Unit 1-10."

2. BACKGROUND

The PM-2A tanks, designated V-13 and V-14, are two 50,000-gal carbon steel underground storage tanks. The tanks are 12.5 ft in diameter and 55 ft long and are positioned horizontally in concrete support cradles. Tank contents following decontamination and decommissioning activities, as documented in *Final Report, Decontamination and Decommissioning of TAN Radioactive Liquid Waste Evaporator System (PM-2A)* (EG&G 1983) consisted of 1,860 gal of sludge in V-13 that was 12 in. thick and 360 gal of sludge in V-14 that was 4 in. thick. Approximately 10,000 lb of diatomaceous earth was added to each tank to absorb free liquids resulting in a layer approximately 8 in. thick. The density of the tank contents (1.0098 g/cm$^{3)}$ was calculated from a weighted average of the densities of the sludge, water, and diatomaceous earth (EDF-4453).

3. CALCULATIONS

3.1 Tank Weight

Tank weight is based on an asphalt-coated steel cylinder with flat ends: 55 ft in length, 12.5 ft in diameter, and 5/8 in. in width. The density of A-36 mild steel is 0.283 lb/in.^{3} and 81 lb/ft^3 for the asphalt coating. The total volume of steel for the tank cylinder is equal to the volume of the outer cylinder (12.5 ft diameter) minus the volume of the inner cylinder (12.396 ft diameter).

The formula for the volume of a right circular cylinder is: $\pi r^2 h$

where:

π= 3.1417

r = radius of the cylinder

h = height of the cylinder.

Outer Cylinder = $\pi(6.25 \text{ ft})^2(55 \text{ ft}) = 6750 \text{ ft}^3$

Inner Cylinder = $\pi(6.198 \text{ ft})^2(55 \text{ ft}) = 6638 \text{ ft}^3$ difference = 112 ft^3

Volume of Tank Ends = $\pi(6.25\ ft)^2(0.0521\ ft)(2\ ends) = 12.8\ ft^3$

Weight of Tank = $125\ ft^3$ steel x $0.283\ lb/in.^3$ x $1728\ in.^3/ft^3$ = 61,128 lb

Weight of Tank Hatch Covers, Four Steel Reinforcing Bands, Welds, etc., is approximated by using 7% of Tank Weight = 0.07 x 61,128 lb = 4,278 lb

Tank Weight without Asphalt Coating = 65,406 lb.

3.2 Weight of the Asphalt Coating

Total Tank Surface Area x Coating Thickness x Asphalt Density = Weight

Area of Ends = $\pi\ r^2\ (2\ ends) = \pi\ (6.25\ ft)^2\ (2) = 245\ ft^2$

Area of Cylinder = $2\ \pi\ r\ h = 2\ \pi\ (6.25\ ft)(55\ ft) = 2160\ ft^2$

(Total Tank Surface Area) (Coating Thickness) (Asphalt Density) = ($2405\ ft^2$) (0.0052 ft) ($81\ lb/ft^3$) = 1,013 lb of asphalt

Tank Weight with Asphalt Coating = 65,406 lb + 1013 lb = 66,419 lb.

3.3 Sludge Weight

There is a significant difference in the quantity of sludge between Tanks V-13 and V-14. The table below is from EDF-4453 and outlines the quantities of sludge, diatomaceous earth, and water estimated with each tank.

Table 1. Quantities of sludge, diatomaceous earth, and water estimated with Tanks V-13 and V-14.

Sludge Mass Calculation			
Tank Identification	Total Gal	Density (g/cc)	Total kg
V-13	1,870	1.35	9,555
V-14	370	1.35	1,891
Diatomaceous Earth Mass Conversion			
	lb	Conversion Factor	kg
V-13	9,800	0.4536	4,445
V-14	10,200	0.4536	4,627
Water in Diatomaceous Earth Mass Conversion			
	Total Gal	Density (g/cc)	kg
V-13	2,191	1	8,293
V-14	2,281	1	8,634

Table 1. (continued).

Total	Sludge Mass	11,446
	Diatomaceous Earth Mass	9,072
	Water in Diatomaceous Earth	16,927

Based on the tank contents numbers in the above table, V-13 contains 22,293 kg (49,148 lb) of sludge and V-14 contains 15,152 kg (33,404 lb) of sludge, making V-13 the heaviest tank and the one that will be conservatively used for lift calculation purposes.

Sludge Weight in V-13 = 49,148 lb.

3.4 Lifting Hardware

Lifting hardware consists of the eight lifting pads with lifting lugs that will be welded to each tank to provide secure attachment points for tank lifting by the crane. The estimated weight of the lifting hardware that will be added to each tank is 1,550 lb (EDF-4453).

Lifting hardware estimated at 1,550 lb.

Total Tank Lift Weight

Tank	65,406 lb
Coating	1,013 lb
Contents	49,148 lb
Lifting Hardware	1,550 lb
Total Tank Weight	117,117 lb =>118,000 lb (to be conservative).

4. CONCLUSION

Portage Environmental, Inc., calculates the weight of the heaviest PM-2A tank (V-13) as 117,117 lb. This weight will be rounded up to 118,000 lb for total tank weight used in future calculations.

5. REFERENCES

Duratek, Calculation ST-467, Supporting Calculations for the INEEL Tanks Lifting and On Site Transportation.

EDF-4453, "Hazard Assessment Calculation for Hazard Classification for PM-2A Tanks (V-13 and V-14)," Rev. 1, Idaho Completion Project, Idaho Falls, Idaho, April, 2004.

EG&G, 1983, *Final Report, Decontamination and Decommissioning of TAN Radioactive Liquid Waste Evaporator System (PM-2A)*, EGG-2236, EG&G Idaho, March 1983.

TFR-234, 2004, "Technical and Functional Requirements for the Remediation of PM-2A Tanks, TSF-26, Operable Unit 1-10," Rev. 2, Idaho Completion Project, Idaho Falls, Idaho, March 22, 2004.

Document ID:PEI-EDF-1007
Revision ID:1
Effective Date:06/21/04

Engineering Design File

TAN-607A High Bay Floor Loading Evaluation

Portage Project No.: 2073.00
Project Title: PM-2A Remediation Phase 1

Portage ENVIRONMENTAL

TEM-0104
03/30/2004
Rev. 0

ENGINEERING DESIGN FILE

1. Portage Project No.: 2073.00 2. Project/Task: PM-2A Remediation Phase 1

3. Subtask: TAN-607A High Bay Floor Loading Evaluation

4. Title: TAN-607A High Bay Floor Loading Evaluation

5. Summary:

This engineering design file evaluates the floor loading capabilities of the TAN- 607A High Bay to support placement of the PM-2A tanks and associated radiological shielding for treatment of the tank contents prior to disposal at the Idaho Comprehensive Environmental Response, Compensation, and Liability Act disposal facility.

6. Distribution: (Portage Environmental, Inc.)

Lisa Aldrich, PEI Document Control (Original)
Brady J. Orchard, P.E.
Nathan M. Wheldon, P.E.
Jeff A. Towers

7. Review (R) and Approval (A) Signatures:
(Identify minimum reviews and approvals. Additional reviews/approvals may be added.)

	R/A	Printed Name/ Organization	Signature	Date
Author	A	Jeff A. Towers		6-21-04
Independent Review	R	Nathan M. Wheldon, P.E.		6-21-04
Project Manager	R/A	Brady J. Orchard, P.E.		06/21/04

PROFESSIONAL ENGINEER
REGISTERED
10393
STATE OF IDAHO
BRADY J. ORCHARD
06/21/04

CONTENTS

1. INTRODUCTION AND PURPOSE 3

2. BACKGROUND 3

3. ANALYSIS RESULTS 3

4. CONCLUSIONS 4

5. REFERENCES 5

Attachment 1—Assembly Pit Cover Design 6

Attachment 2—Drawing No. P-FFA/CO-PM2A-003 59

1. INTRODUCTION AND PURPOSE

This engineering design file (EDF) evaluates the floor loading capabilities of the TAN-607A High Bay for placement of the PM-2A tanks and the necessary radiological shielding to allow continuous occupational occupancy of the High Bay as stated in 10 CFR 835.1002. Shielding requirements for the PM-2A tanks are described in Portage Environmental, Inc. (Portage) EDF, PEI-EDF-1005.

2. BACKGROUND

During Phase 1 remediation of the PM-2A tanks, the tanks will be excavated and transported to the TAN-607A High Bay for storage. Because the tanks contain sludge contaminated with radionuclides, shielding will have to be placed in the TAN-607A High Bay to prevent personnel exposure and allow unrestricted access for normal occupational occupancy while the tanks are in storage. The floor loading from the combination of the tanks, support structures, and associated shielding is expected to be significant. To prevent any potential damage to the High Bay floor, a structural engineering evaluation of the floor loading restrictions was performed by Eclipse Engineering, Inc. (Eclipse), under contract to Portage. The floor loading analyses are included in this EDF as Attachment 1.

3. ANALYSIS RESULTS

Eclipse performed the structural analysis of the TAN-607A High Bay floor based on the original structural drawings provided by Bechtel BWXT Idaho, LLC. In areas of the floor where additional reinforcing was done for specific project requirements since initial construction, no credit was taken for reinforcing that was not documented on as-built drawings. The Eclipse analysis divided the High Bay floor into seven sub-areas with specific floor-loading capacities. These sub-areas are delineated on Portage Drawing P-FFA/CO-PM2A-003 (Attachment 2).

Sub-Area 1 – 500 lb/ft^2

Sub-Area 2 – 2,615 lb/ft^2, except in the assembly pit area, which is limited to 285 lb/ft^2

Sub-Area 3 – 500 lb/ft^2

Sub-Area 4 – 1,542 lb/ft^2

Sub-Area 5 – 1,490 lb/ft^2

Sub-Area 6 – 500 lb/ft^2

Sub-Area 7 – 500 lb/ft^2, except the strip supporting the railroad tracks, which can support 1,895 lb/ft^2.

Eclipse evaluated the assembly pit in Sub-Area 2 and recommended a structural cover that would allow placement of the PM-2A tanks on Sub-Areas 2 and 4 without damaging the

floor. The structural cover consists of tube steel planks (HSS 8 in. wide by 2 in. high by 20 ft long, 0.188-in. wall thickness) placed across the assembly pit area (57 ft 6 in. long by 4 ft wide) to transfer the load to the higher strength areas of Sub-Area 2. The evaluation of the area used a 205,000-lb total load on a six-axle transporter, with concrete shielding installed 12 ft from the planking centerline for personnel exposure protection. The tank transporter tires exerted 6,960 psf on the steel planking and the shielding added 870 psf per lineal foot approximately 1 ft away from the steel planking with the combination resulting in permissible floor loading. The analysis was performed using less axles (six versus 12) on the trailer to ensure adequate strength for the additional weight (approximately 100,000 lb) from anticipated grouting in Phase 2 that the transporter and floor will have to carry safely when the tanks are removed from the TAN-607A High Bay. Details are provided in the assembly pit cover design in Attachment 1.

For areas where the floor-loading capacity is less than the force applied by a point load like a tire, factors such as slab thickness, slab design, and overall floor loading must be examined to determine what point load can be safely applied to the floor. Concrete floors are designed to distribute loads so that an individual point on the floor never actually carries the entire load. As an example, Sub-Area 4 has a floor rating of 1,542 psf, but can safely support movement of a PM-2A tank on the transporter having an axle load of 34,167 psf (205,000-lb load, six axles) because of the floor design and lack of other additional floor loading (details in Attachment 1).

4. CONCLUSIONS

The TAN-607A High Bay floor will require a structural cover over the assembly pit area to safely allow anticipated floor loading from the PM-2A tanks and associated shielding. The floors outside the assembly pit will not require any additional strengthening or modifications to safely support floor loadings from transport and placement of the tanks and associated shielding in the High Bay. Additionally, the floor loadings and cribbing equipment in Sub-Areas 2 and 4 have been checked with the anticipated extra weight (100,000 lb) that grouting may add during Phase 2 activities and determined adequate. In the event that future operations require capacity floor loadings in localized areas of the High Bay, additional structural covers can be utilized to safely disperse the load.

5. REFERENCES

10 CFR 835.1002, 2004, "Facility Design and Modifications," *Code of Federal Regulations*, Office of the Federal Register, January 1, 2004.

PEI-EDF-1005, 2004, "PM-2A Tank Shielding Requirements using MicroShield v. 6.02," Rev. 0, May 2004.

Attachment 1

Assembly Pit Cover Design

Eclipse Engineering, Inc.
consulting engineers

April 30, 2004

Mr. Jeff Towers
Portage Environmental, Inc.
1075 South Utah, Suite 200
Idaho Falls, ID 83402

Re: Assembly Pit Cover Design
Building TAN 607A, High Bay Assembly Shop
Idaho National Engineering & Environmental Laboratory
Idaho Falls, Idaho

Jeff,

As requested, I have designed the cover for the Assembly Pit of the above noted building. The adjacent floor and foundation is a system of cast-in-place concrete slabs, grade beams and drilled concrete piers. The Assembly Pit, located within the area known as the HIGH BAY ASSEMBLY SHOP, is approximately 57'-6" long x 4'-0" wide. Reference our floor analysis report dated March 11, 2004. Also reference the original structural drawings produced by The Ralph M. Parsons Company, dated 8/3/56.

The owner wishes to store large tanks in the HIGH BAY ASSEMBLY SHOP. The tanks shall be transported into the building by entering through a door on the west side. The transporter will back the tanks along the existing railroad tracks to the east side of the Shop. The tanks will be positioned end-to-end along the tracks from the east side to the west door of the Shop (approx. 3 tanks).

In order to safely move or store the tanks in the Shop, a structural cover shall be constructed over the abandon Assembly Pit. This cover shall be HSS8x2x3/16x20'-0" tube steel planks that span across the 4'-0" width of the pit as shown on the attached Details A and B, sheets 1 and 2, respectively.

The planks shall support the total weight of the tank and the transporter, as well as the saddle & saddle support, which have a total weight of 205,000 lbs. Reference the attached information from 'Duratek', sheet 3. The transporter has 6 axles, so each axle is assumed to support 34,167 lbs. Each 10'-0" axle has 8 wheels (4 on each end of the axle). So each set of 4 wheels supports one-half of the axle load or

235 North 1st St. West, 2nd Floor
Missoula, Montana 59802
Phone: (406) 721-5733
Fax: (406) 721-4988
www.eclipse-engineering.com

17,083 lbs. The wheels exert 6,960 psf of pressure on the planks, which are adequate to support this pressure (reference the attached calculation on the attached sheet 4).

Regarding the remainder of the concrete floor in the Shop area, although the 6,960 psf of pressure is more than the 1500 psf allowed per my report dated March 11, 2004, the concrete is capable of dispursing the concentrated wheel load. The 6,960 psf wheel load only makes contact with about 10% of the floor at any given instant. And the other 90% of the floor is not loaded at all. So, what becomes important is the effective loaded area.

The bending and shear stresses in the concrete floor resulting from the concentrated load will be dispersed through the concrete slab over a width equal to about 8 times the slab thickness. Since the slab is 10-inches thick (minimum), the effective width of the loaded area is either 80-inches or the center-to-center spacing of the axles. Reference the attached calculation, sheet 5, which justifies the concrete floor to support the transporter. The steel plank cover over the Assembly area is not conjoined and therefore can not dispurse the load in the same manner as the concrete. Therefore, the planks shall be designed for the full 6,960 psf of load.

Also, the floor is adequate to support concrete shielding block walls located on either side of the tanks. It is my understanding that the shielding blocks are 20-inch thick concrete blocks that are stacked 6'-0" high. Assuming a concrete density of 145 pcf, the load on the concrete floor from the walls would be 870 psf, which is less than the load rating on the floor.

We have designed only the Assembly Pit Cover for the HIGH BAY ASSEMBLY SHOP as described in this letter. With the exception of our floor analysis report dated March 11, 2004, we hold no responsibility for any other element or the integrity of the structure as a whole. Please call with any specific questions.

Sincerely,

Eclipse Engineering, Inc.

PROFESSIONAL ENGINEER
REGISTERED
9081
4-30-04
STATE OF IDAHO
TROY LEISTIKO

Troy Leistiko, P.E.
Project Engineer

Attachments: Details A and B, 'Duratek' loading information, calculations.

Eclipse Engineering, Inc.
consulting engineers
235 N. First St. West, 2nd Floor
Missoula, MT 59802
Ph: (406) 721-5733
Fax: (406) 721-4988
www.eclipse-engineering.com

TAN BLDG 607A

TRANSPORTER + TANK SUPPORT

TROY

4/30/04

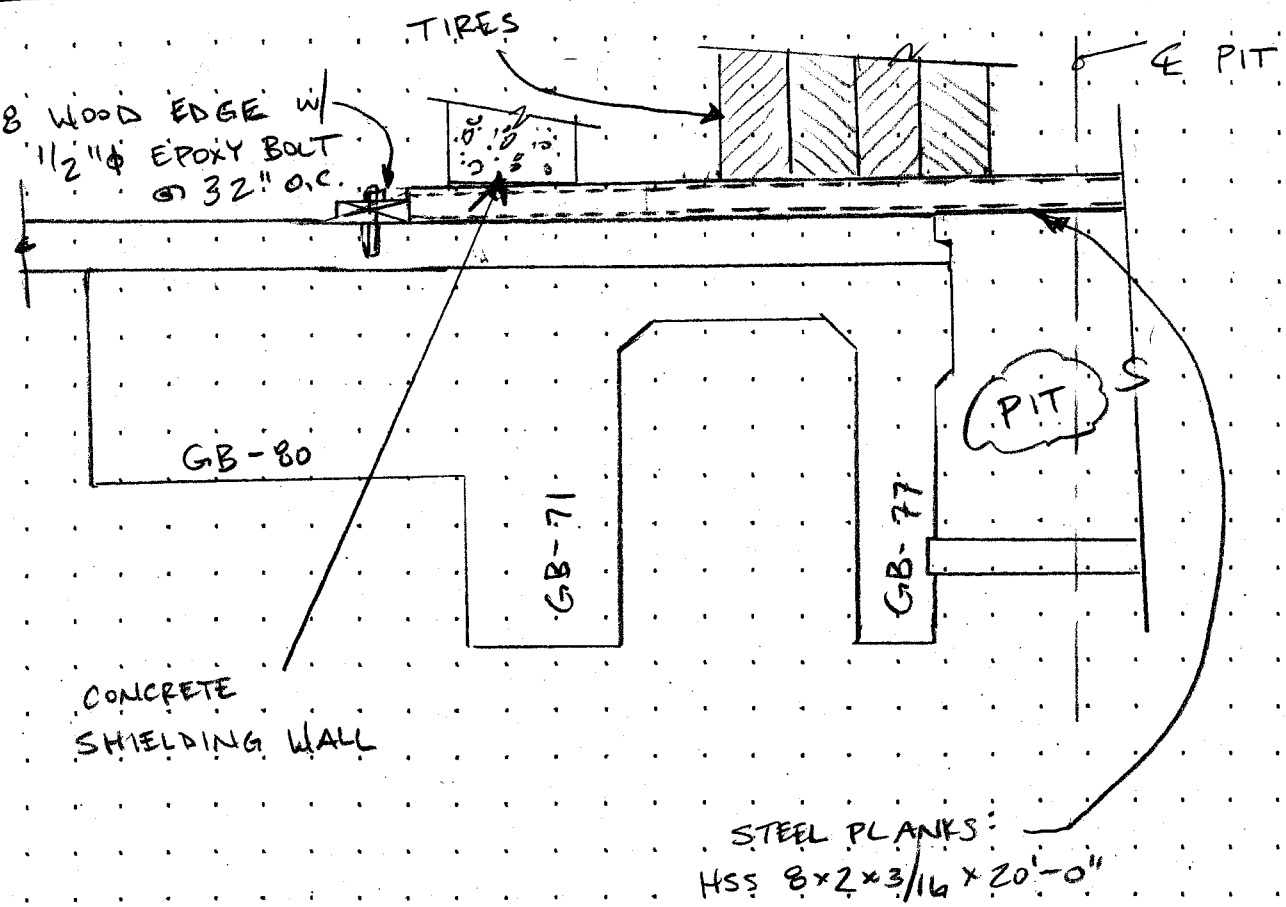

A PIT SECTION

SCALE: 3/8"=1'-0"

Eclipse Engineering, Inc.
consulting engineers
235 N. First St. West, 2nd Floor
Missoula, MT 59802
Ph: (406) 721-5733
Fax: (406) 721-4988
www.eclipse-engineering.com

TAN BLDG 607A
TRANSPORTER + TANK SUPPORT

TROY 4/30/04

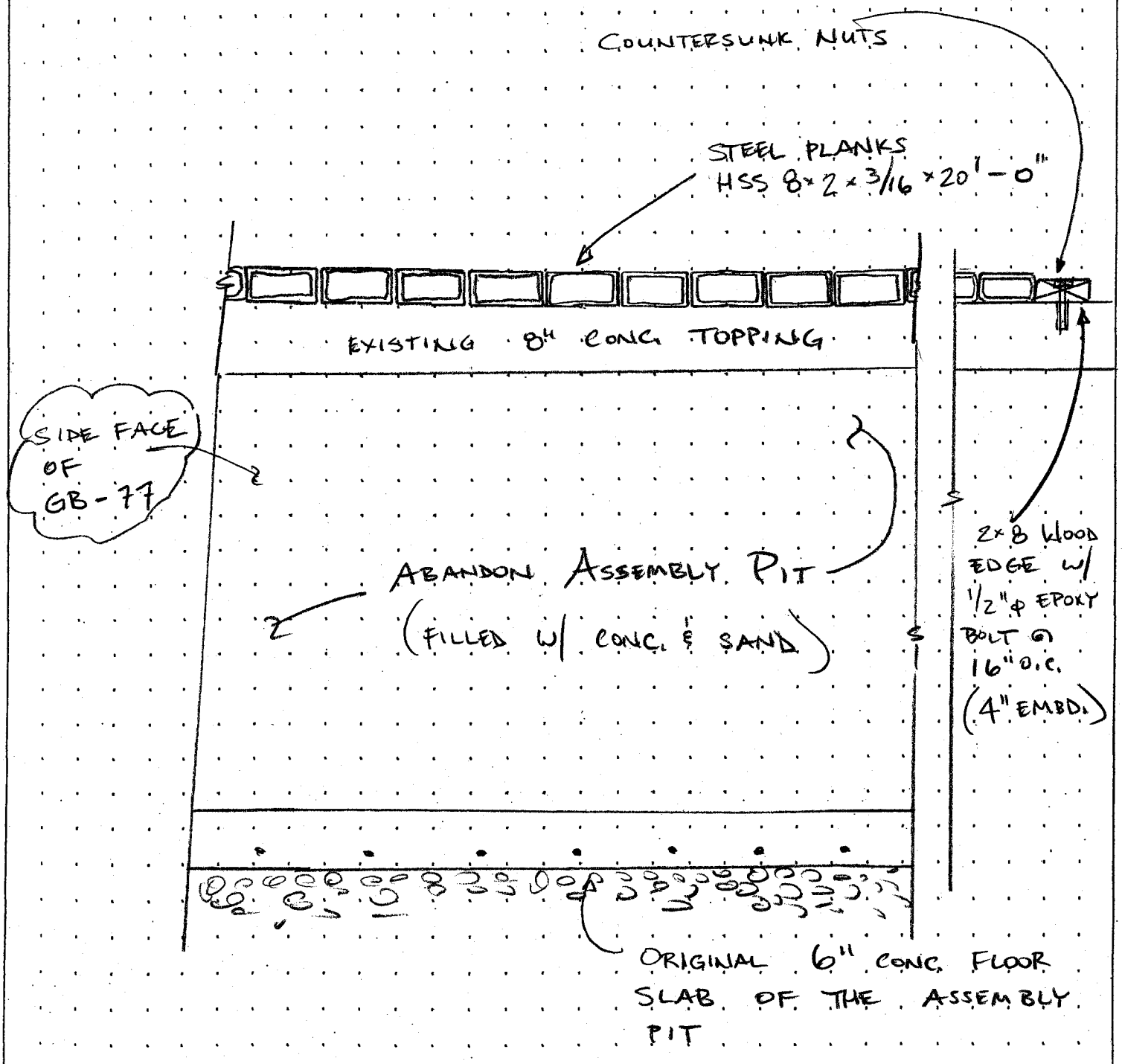

B PIT COVER SECTION
SCALE: 3/4"=1'-0"

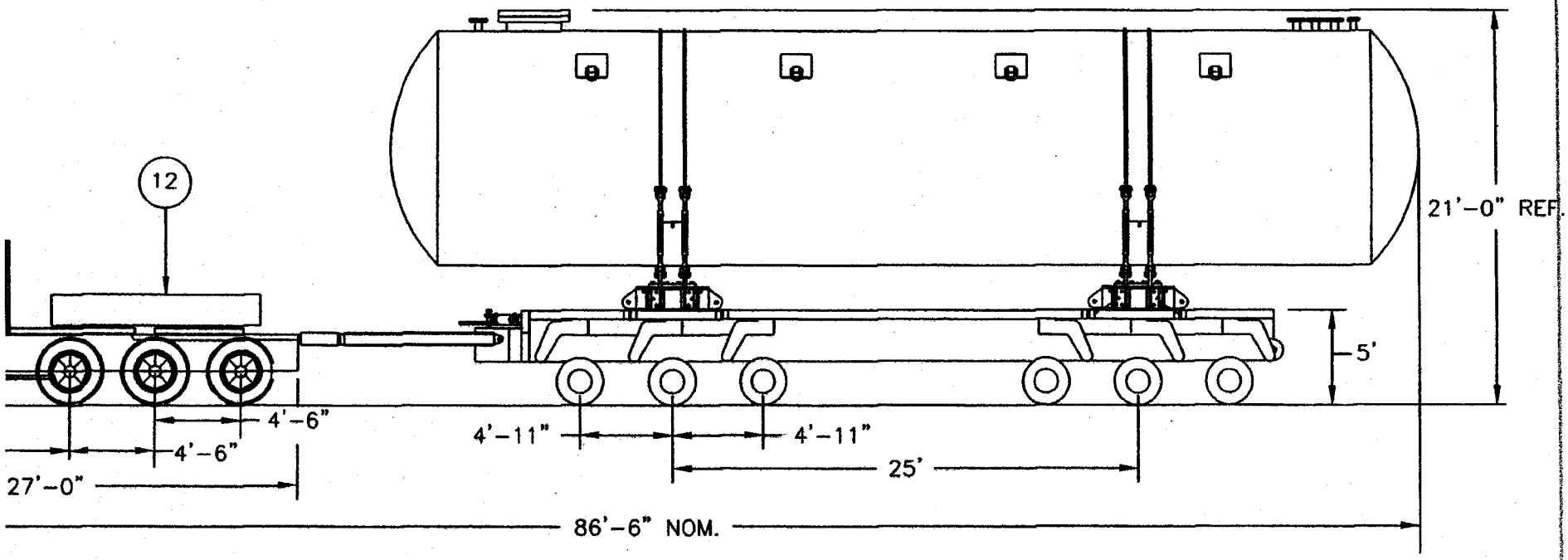

PRIME MOVER DATA		
ONT	WEIGHT = 15,000 LBS	1 AXLES
	TIRES/AXLE	2
	TIRES CONTACT AREA	5.55 SQ.FT
	PSF	2,702
ACK	WEIGHT = 26,500 LBS	3 AXLES
	TIRES/AXLE	4
	TIRES CONTACT AREA	10.03 SQ.FT
	PSF	2,629

WT. UNITS	
TRUCK	24,000 LB
COUNTERWEIGHT	17,500 LB
TOTAL WT.	41,500 LB

TRANSPORTER DATA	
No. OF AXLES	6 AXLES
TIRES/AXLE	8
TIRES CONTACT AREA	88.36 SQ.IN.
TOTAL CONTACR AREA	4241.28 SQ. IN.
PSI	48.33
PSF	6,960

WT. UNITS	
TRANSPORTER	40,000 LB
TANK	125,000 LB
SADDLE SUPPORT/SADDLE	40,000 LB
TOTAL LOAD	205,000 LB

TAN BLDG 607A
TRANSPORTER + TANK SUPPORT

3/5

3

☒ PROPRIETARY	FSCM No. 54643
☐ NON-PROPRIETARY	DO NOT SCALE PRINT

Duratek™

Eclipse Engineering, Inc.
consulting engineers
235 N. First St. West, 2nd Floor
Missoula, MT 59802
Ph: (406) 721-5733
Fax: (406) 721-4988
www.eclipse-engineering.com

TAN BLDG. 607A

TRANSPORTER + TANK SUPPORT

TROY 4/30/04

PIT COVER

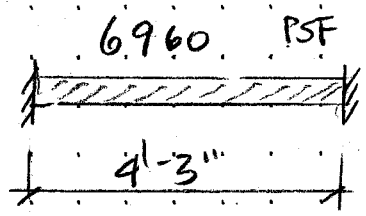

ASSUME A500 TUBE
$F_y = 46$ KSI
$F_b = 0.75\ F_y$
$F_v = 0.40\ F_y$
$E = 29E6$ PSI
ANALYZE / DESIGN w/ ASD

$V = 14.79$ K/FT

$M = 10.48$ K'/FT

$A_{WEB,\ REQUIRED} = 0.80$ IN^2/FT.

$S_{y,\ REQUIRED} = 3.64$ IN^3/FT.

USE HSS 8×2×3/16 PLANKS ($A_{WEB} = 1.125$ IN^2/FT, $S_y = 3.78$ IN^3/FT, $I_y = 3.78$ IN^4/FT.)

CHECK DEFLECTION, $\Delta = \frac{wl^4}{384EI} = 0.093''$, OK $L/547$

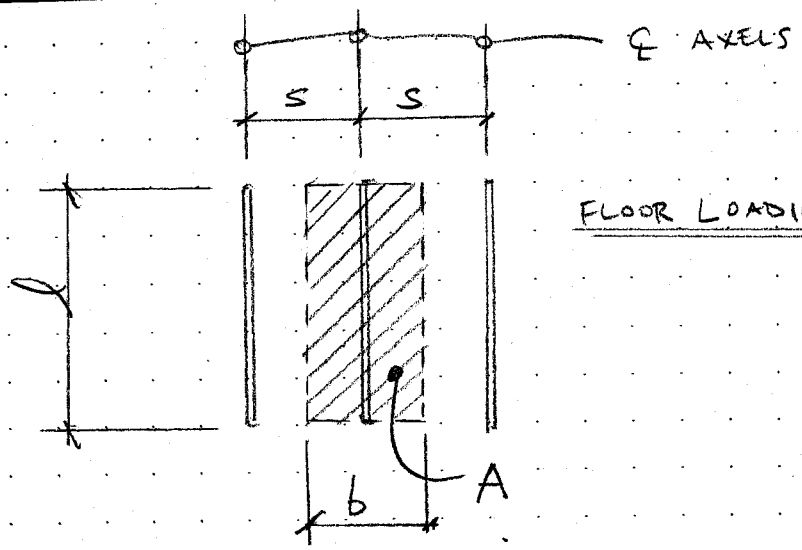

FLOOR LOADING DIAGRAM
No SCALE

l = EFFECTIVE LOADED LENGTH (OUT-TO-OUT DIMENSIONS OF TIRES)

b = EFFECTIVE LOADED WIDTH, THE LESSER OF:
$8t$ OR S, WHERE...
t = SLAB THICKNESS
S = CENTER-TO-CENTER SPACING OF AXELS

A = EFFECTIVE LOADED AREA = $l \cdot b$

P = LOAD PER AXEL

w = EFFECTIVE LOAD PER SQUARE FOOT = $\frac{P}{A}$

EXAMPLE

P = 205,000 LB ÷ 6 AXELS = 34,167 LB.

l = 10'-0", b = 4'-11" ⟶ A = 49.17 FT.^{2}

w = 695 PSF > 1500 PSF OK

(END OF EXAMPLE)

Eclipse Engineering, Inc.
consulting engineers
235 North 1st St. West, 2nd Floor
Missoula, Montana 59802
Phone: (406) 721-5733
Fax: (406) 721-4988
www.eclipse-engineering.com

To:	Jeff Towers Portage Environmental – Idaho Falls	**From:**	Troy Leistiko
Fax:	(208) 523-8860	**Pages:**	~~8~~ 10 (including this cover)
Phone:	(208) 227-1393 – Direct Line to Jeff T.	**Date:**	5/12/04
Re:	TAN Bldg. 607A – Assembly Pit Cover	**CC:**	none

☐ **Urgent** x **For Review** ☐ **Please Comment** ☐ **Please Reply** x **Please Recycle**

• **Comments:**

Jeff,

Attached is my letter providing proof that the existing slab, when supporting a point load, shall be analyzed as a strip that is up to 8 times the slab thickness.

Please call with any questions.

Best Regards,

Troy

Eclipse Engineering, Inc.
consulting engineers

May 11, 2004

Mr. Jeff Towers
Portage Environmental, Inc.
1075 South Utah, Suite 200
Idaho Falls, ID 83402

Re: Assembly Pit Cover Design
Building TAN 607A, High Bay Assembly Shop
Idaho National Engineering & Environmental Laboratory
Idaho Falls, Idaho

Jeff,

As requested, this letter serves as a response to your request that we provide some sort of background or research to our assumption that the bending and shear stresses in the concrete floor resulting from the concentrated load will be dispersed through the concrete slab over a width equal to about 8 times the slab thickness. Reference our design letter dated April 30, 2004.

I have attached further calculations and excerpts from three references that I feel will convince you and the owner that our design assumptions are conservative.

Please call with any specific questions.

Sincerely,

Eclipse Engineering, Inc.

Troy Leistiko, P.E.
Project Engineer

Attachments: excerpts from ACI-318, Design of Concrete Structures (Nilson), and Reinforced Concrete Fundamentals (Ferguson, Breen, Jirsa)

235 North 1st St. West, 2nd Floor
Missoula, Montana 59802
Phone: (406) 721-5733
Fax: (406) 721-4988
www.eclipse-engineering.com

Eclipse Engineering, Inc.
consulting engineers
STRUCTURAL SOLUTIONS FOR THE NEXT GENERATION
236 N. First St. West
Missoula, MT 59802
Ph: (406) 721-5733
www.eeimt.com

TAN BLDG 607A

TRANSPORTER + TANK SUPPORT

1/1

DATE: 5/11/04

DESIGN BY: TROY

- FROM ACI 318 8.10.2,
  EFFECTIVE FLANGE THICKNESS FOR T-BEAMS
  = 8 TIMES THE SLAB THICKNESS

- FROM ARTHUR H. NILSON,

$$P = 2\pi (M + M')$$

$$\phi P_n = 2\pi \left(8.69 \frac{k'}{FT.} + 8.69 \frac{k'}{FT.}\right) = \underline{\underline{109.2\ k}}$$

$$109.2k >> 17.1k \ (1/2 \text{ ASSUMED AXLE LOAD})$$

- FROM JOHANSEN,

EFFECTIVE WIDTH = $2 \times \text{SPAN} \times \sqrt{\mu}$,
WHERE μ = RATIO OF PERPENDICULAR TOP STEEL TO LONGITUDINAL BOTTOM STEEL

SPAN = 5'-7 1/4" (SECTION B/S115 OF PARSONS DRWGS.)

$$\mu = 0.44 = \frac{0.233\ IN^2/FT\ (\#5 @ 16")}{0.528\ IN^2/FT.\ (\#6 @ 10")}$$

$\therefore$ EFFECTIVE WIDTH = $2 \times 5.60' \times \sqrt{0.44} = 7.43$ FEET

OR 8.92 × SLAB THICKNESS
WHICH EXCEEDS OUR ASSUMPTIONS

CODE

8.10 — T-beam construction

8.10.1 — In T-beam construction, the flange and web shall be built integrally or otherwise effectively bonded together.

8.10.2 — Width of slab effective as a T-beam flange shall not exceed one-quarter of the span length of the beam, and the effective overhanging flange width on each side of the web shall not exceed:

(a) eight times the slab thickness;

(b) one-half the clear distance to the next web.

8.10.3 — For beams with a slab on one side only, the effective overhanging flange width shall not exceed:

(a) one-twelfth the span length of the beam;

(b) six times the slab thickness;

(c) one-half the clear distance to the next web.

8.10.4 — Isolated beams, in which the T-shape is used to provide a flange for additional compression area, shall have a flange thickness not less than one-half the width of web and an effective flange width not more than four times the width of web.

8.10.5 — Where primary flexural reinforcement in a slab that is considered as a T-beam flange (excluding joist construction) is parallel to the beam, reinforcement perpendicular to the beam shall be provided in the top of the slab in accordance with the following:

8.10.5.1 — Transverse reinforcement shall be designed to carry the factored load on the overhanging slab width assumed to act as a cantilever. For isolated beams, the full width of overhanging flange shall be considered. For other T-beams, only the effective overhanging slab width need be considered.

8.10.5.2 — Transverse reinforcement shall be spaced not farther apart than five times the slab thickness, nor farther apart than 18 in.

8.11 — Joist construction

8.11.1 — Joist construction consists of a monolithic combination of regularly spaced ribs and a top slab arranged to span in one direction or two orthogonal directions.

8.11.2 — Ribs shall be not less than 4 in. in width, and shall have a depth of not more than 3-1/2 times the minimum width of rib.

COMMENTARY

R8.10 — T-beam construction

This section contains provisions identical to those of previous codes for limiting dimensions related to stiffness and flexural calculations. Special provisions related to T-beams and other flanged members are stated in 11.6.1 with regard to torsion.

R8.11 — Joist construction

The size and spacing limitations for concrete joist construction meeting the limitations of 8.11.1 through 8.11.3 are based on successful performance in the past.

DESIGN OF CONCRETE STRUCTURES

Twelfth Edition

Arthur H. Nilson

Professor Emeritus
Structural Engineering
Cornell University

With contributions by

David Darwin

Professor of Civil Engineering
University of Kansas

WCB McGraw-Hill

Boston, Massachusetts Burr Ridge, Illinois Dubuque, Iowa
Madison, Wisconsin New York, New York San Francisco, California St. Louis, Missouri

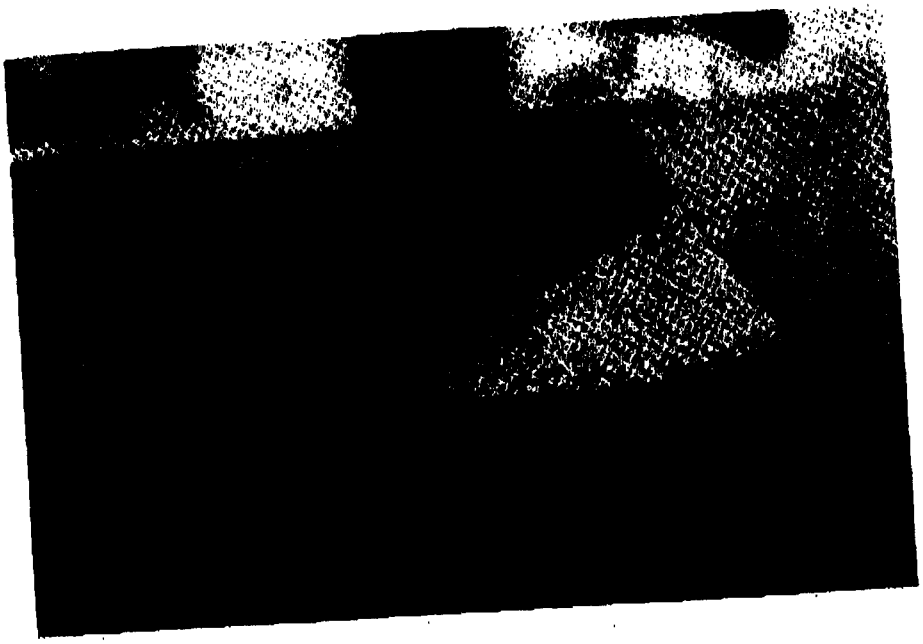

FIGURE 14.15
Development of corner levers in a simply supported, uniformly loaded slab.

considerably more complicated if the possibility of corner levers is introduced, and the error made by neglecting them is usually small.

To illustrate, the uniformly loaded square slab of Example 14.2, when analyzed for the assumed yield pattern of Fig. 14.7, required an ultimate moment capacity of $wL^2/24$. The actual yield line pattern at failure is probably as shown in Fig. 14.14*b*. Since two additional parameters m and n have necessarily been introduced to define the yield line pattern, a total of three equations of equilibrium is now necessary. These equations are obtained by summing moments and vertical forces on the segments of the slab. Such an analysis results in a required resisting moment of $wL^2/22$, an increase of about 9 percent compared with the results of an analysis neglecting corner levers. The influence of such corner effects may be considerably larger when the corner angle is less than 90°.

14.8 FAN PATTERNS AT CONCENTRATED LOADS

If a concentrated load acts on a reinforced concrete slab at an interior location, away from any edge or corner, a negative yield line will form in a more-or-less circular pattern, as in Fig. 14.16*a*, with positive yield lines radiating outward from the load point. If the positive resisting moment per unit length is m and the negative resisting moment m', the moments per unit length acting along the edges of a single element of the fan, having a central angle β and radius r, are as shown in Fig. 14.16*b*. For small values of the angle β, the arc along the negative yield line can be represented as a straight line of length $r\beta$.

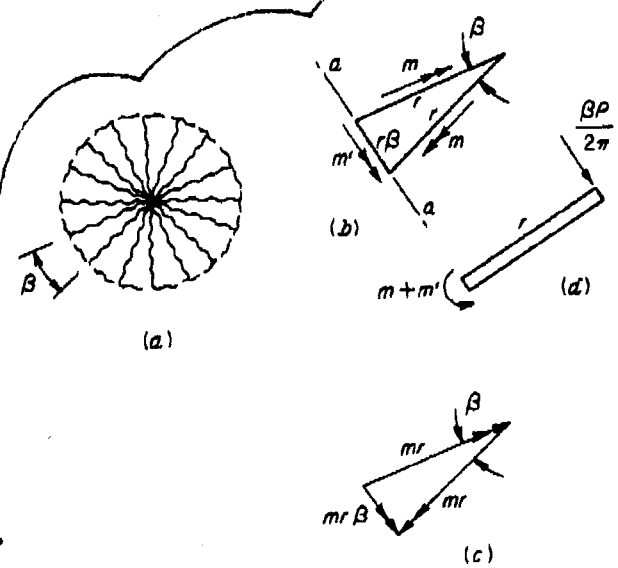

FIGURE 14.16
Yield fan geometry at concentrated load: (*a*) yield fan; (*b*) moment vectors acting on fan segment; (*c*) resultant of positive moment vectors; (*d*) edge view of fan segment.

Figure 14.16*c* shows the moment resultant obtained by vector addition of the positive moments mr acting along the radial edges of the fan segment. The vector sum is equal to $mr\beta$, acting along the length $r\beta$, and the resultant positive moment, per unit length, is therefore m. This acts in the same direction as the negative moment m', as shown in Fig. 14.16*d*. Figure 14.16*d* also shows the fractional part of the total load P that acts on the fan segment.

Taking moments about the axis $a - a$ gives

$$(m + m')r\beta - \frac{\beta P r}{2\pi} = 0$$

from which

$$\boxed{P = 2\pi(m + m')} \tag{14.4}$$

The collapse load P is seen to be independent of the fan radius r. With only a concentrated load acting, a complete fan of any radius could form with no change in collapse load.

It follows that Eq. (14.4) also gives the collapse load for a fixed-edge slab of any shape, carrying only a concentrated load P. The only necessary condition is that the boundary must be capable of a restraining moment equal to m' at all points.

Other load cases of practical interest, including a concentrated load near or at a free edge, and a concentrated corner load, are treated in Ref. 14.5. Loads distributed over small areas and load combinations are discussed in Ref. 14.12.

REINFORCED CONCRETE FUNDAMENTALS

FIFTH EDITION

PHIL M. FERGUSON
THE LATE T. U. TAYLOR PROFESSOR EMERITUS OF CIVIL ENGINEERING
THE UNIVERSITY OF TEXAS AT AUSTIN

JOHN E. BREEN
THE NASSER I. AL-RASHID CHAIR IN CIVIL ENGINEERING
THE UNIVERSITY OF TEXAS AT AUSTIN

JAMES O. JIRSA
THE PHIL M. FERGUSON PROFESSOR OF CIVIL ENGINEERING
THE UNIVERSITY OF TEXAS AT AUSTIN

WILEY

JOHN WILEY & SONS
NEW YORK CHICHESTER BRISBANE TORONTO SINGAPORE

7

DISTRIBUTION OF CONCENTRATED LOADS AND OTHER SPECIAL PROBLEMS

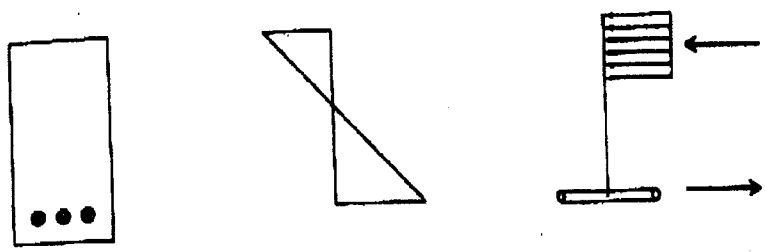

17.1 Concrete Structures Distribute Concentrated Loads

The ordinary reinforced concrete structure is either monolithic or is tied together to act as a unit. Although parallel members of the structure may be analyzed somewhat independently of each other under uniform live loads, the entire structure is actually a three-dimensional frame. When moving concentrated loads are considered, their spacing and their number suggest that all parallel slab strips and all neighboring beams are not equally loaded. The interaction of the several slab strips and beams is usually such as to make the effective slab loading less severe than if each set of loads acted separately on the individual members.

When a heavy wheel rolls over a plank floor, each plank in turn must support the total load. In contrast, when a wheel moves over a concrete slab the wheel deflects the slab locally into a saucerlike pattern and this depression moves with the wheel across or along the slab. Thus a slab strip is deflected (and must be loaded) without a wheel actually resting on it. As the wheel passes over a particular strip the deflection increases, but the single 1-ft strip of slab never carries the entire wheel load unassisted. The designer describes this by saying the wheel load in Fig. 17.1*a* is distributed over an effective width E (Fig. 17.1*b*), that is, the moment on the most heavily loaded 1-ft strip is produced by $1/E$ parts of the total load, as in Fig. 17.1*c*. Likewise, closely spaced beams share in carrying concentrated loads when the beams are connected by stiff floor slabs or stiff diaphragms.

The result of a theoretical study of how a single wheel load is carried by a simple girder highway span is shown in Fig. 17.2. The load is applied to midspan, directly over beam B, and the assumed girder stiffness is five times that of the slab for a width equal to the girder span. Girder B then deflects more than its neighbors A and C. The slab (attached to the beams) is pulled down by beam B, but it resists this movement and exerts upward forces on the beam, as shown

attempt to demonstrate how load distribution factors are established nor to
ulate them for the many possible conditions. Rather its objective is to call
ntion to the problem of load distribution and illustrate how it can be handled
a few typical cases.

7.2 Load Distribution in a Concrete Slab

Load distribution in a slab is approached on two different bases: (1) the service
oad or deflection basis and (2) the ultimate strength or yield line basis. The
distribution at service loads is the one more commonly considered. For a wide
lab with a 10-ft simple span, the effective width thus determined for a simple
load is between 6 and 8 ft, depending somewhat on the size of the load contact
area and the particular algebraic formula[2] used. For comparison, Johansen has
shown[3] that at ultimate load, the effective width is twice the span multiplied by
$\sqrt{\mu}$, where μ is the ratio of the perpendicular top steel to the longitudinal
bottom steel. If μ is about 1/3, the effective width is $2 \times 10\sqrt{0.33} = 11.5$ ft.

One complication that may make calculations at ultimate strength uncertain
is the shear capacity of the slab around the load. Richart and Kluge[4] found
shear failures occurring from diagonal tension, with a truncated cone of con-
crete punched out below the load. When those shear stresses were calculated
on a surface at a distance d beyond the load, the unit shear stress was low, in
one series from $0.044f'_c$ to $0.057f'_c$. Because the shear failures came at loads
50% greater than those producing local yielding of the steel, the low shear
stresses were not considered serious. For a yield line analysis shear stresses
around the load might be more significant.

It appears that the distribution based on elastic conditions, as commonly
used, is on the safe side. Its use also tends to reduce crack size at working
loads. For elastic conditions, Westergaard[5] established an extreme value of
maximum positive moment on a slab as $0.315P$ for any simple span when P is
distributed over a circular area with the diameter equal to $\frac{1}{10}$ of the span, the
slab thickness is $\frac{1}{12}$ of the span, and Poisson's ratio is 0.15. (This local moment
is quite sensitive to the size of the bearing area.) The corresponding transverse
moment is $0.248P$. Jensen[6] extended these results to show the effect of a rigid
beam support at right angles, that is, an effect similar to that in a two-way slab.
At this crossbeam the maximum negative moment is $-P/2\pi = -0.159P$ and it
occurs with the wheel quite close to the beam.

When closely spaced multiple wheels occurs, an extra slab width acts, but
the effective width per wheel is reduced. The AASHTO *Standard Specifica-
tions for Highway Bridges*[7] specify such an effective width E for a slab carrying
a single wheel (traveling in the direction of the span) that the resultant design is
safe for multiple wheels without further calculations. Special transverse distri-
bution steel is also specified as a percentage of the positive moment steel, in the
amount of $100/\sqrt{S}$ but not over 50%, where S is the span in feet.* When the

* The AASHTO notations S and E are retained in this chapter.

Eclipse Engineering, Inc.
consulting engineers

March 11, 2004

Mr. Brady Orchard
Portage Environmental
591 Park Avenue, Suite 201
Idaho Falls, ID 83402

Re: Concrete Floor Analysis
Building TAN 607A, High Bay Assembly Shop
Idaho National Engineering & Environmental Laboratory
Idaho Falls, Idaho

Brady,

As requested, I have analyzed the concrete floor of the above noted building and I have determined its superimposed live load capacity. We have not analyzed the floor of the entire structure, but only the portion described in this letter.

The floor and foundation area bound by grid lines 1 to the west, 8 to the east, N to the north and P to the south is a system of cast-in-place concrete slabs, grade beams and drilled concrete piers. This area, also known as the HIGH BAY ASSEMBLY SHOP, is approximately 58'-0" x 147'-0" as shown on the attached PARTIAL FOUNDATION & FIRST FLOOR PLAN. Also reference the original structural drawings produced by The Ralph M. Parsons Company, dated 8/3/56.

Within the area described above, there are several different sub-areas where the configuration of the slab, grade beams and drilled piers vary as follows (also reference the attached KEY PLAN):

Sub-area 1: Defined roughly as between grids N and N.2, 1 and 8. This sub-area is an 8-inch thick slab-on-grade.
Sub-area 2: Defined roughly as between grids N.2 and N.6, 1 and 4. This sub-area is a system of slabs, grade beams and drilled piers. Contained within this sub-area is the ASSEMBLY PIT
Sub-area 3: Defined roughly as between grids N.6 and P, 1 and 5. This sub-area is an 8-inch thick slab-on-grade.

235 North 1st St. West, 2nd Floor
Missoula, Montana 59802
Phone: (406) 721-5733
Fax: (406) 721-4988
www.eclipse-engineering.com

Sub-area 4: Defined roughly as between grids N.2 and N.6, 4 and 7.8. This sub-area is a system of slabs, grade beams and drilled piers

Sub-area 5: Defined roughly as between grids N.6 and P, 5 and 7. This sub-area is an 8-inch thick slab-on-grade supplemented with drilled piers. Contained within this sub-area is the BED PLATE.

Sub-area 6: Defined roughly as between grids N.2 and N.6, 7.8 and 8. This sub-area is an 8-inch thick slab-on-grade.

Sub-area 7: Defined roughly as between grids N.6 and P, 7 and 8. This sub-area is an 8-inch thick slab-on-grade supplemented with grade beams and drilled piers.

We have determined the superimposed live load capacity of each sub-area as follows (reference our calculation booklet for the detailed structural analysis):

Sub-area 1: 500 pounds per square foot.

Sub-area 2: 2615 pounds per square foot, except the assembly pit which is limited to 285 pounds per square foot.

Sub-area 3: 500 pounds per square foot.

Sub-area 4: 1542 pounds per square foot.

Sub-area 5: 1490 pounds per square foot.

Sub-area 6: 500 pounds per square foot.

Sub-area 7: 500 pounds per square foot, except the 6'-2" wide strip that supports the railroad tracks which can support up to 1895 pounds per square foot.

We have analyzed only the concrete floor of the HIGH BAY ASSEMBLY SHOP as described in this letter. We hold no responsibility for any other element or the integrity of the structure as a whole. Please call with any specific questions.

Sincerely,

Eclipse Engineering, Inc.

PROFESSIONAL ENGINEER
REGISTERED
9081
3/15/04
STATE OF IDAHO
TROY LEISTIKO

Troy Leistiko, P.E.
Project Engineer

Attachments: PARTIAL FOUNDATION & FIRST FLOOR PLAN, KEY PLAN

ECLIPSE ENGINEERING
TROY LEISTIKO
3/11/04

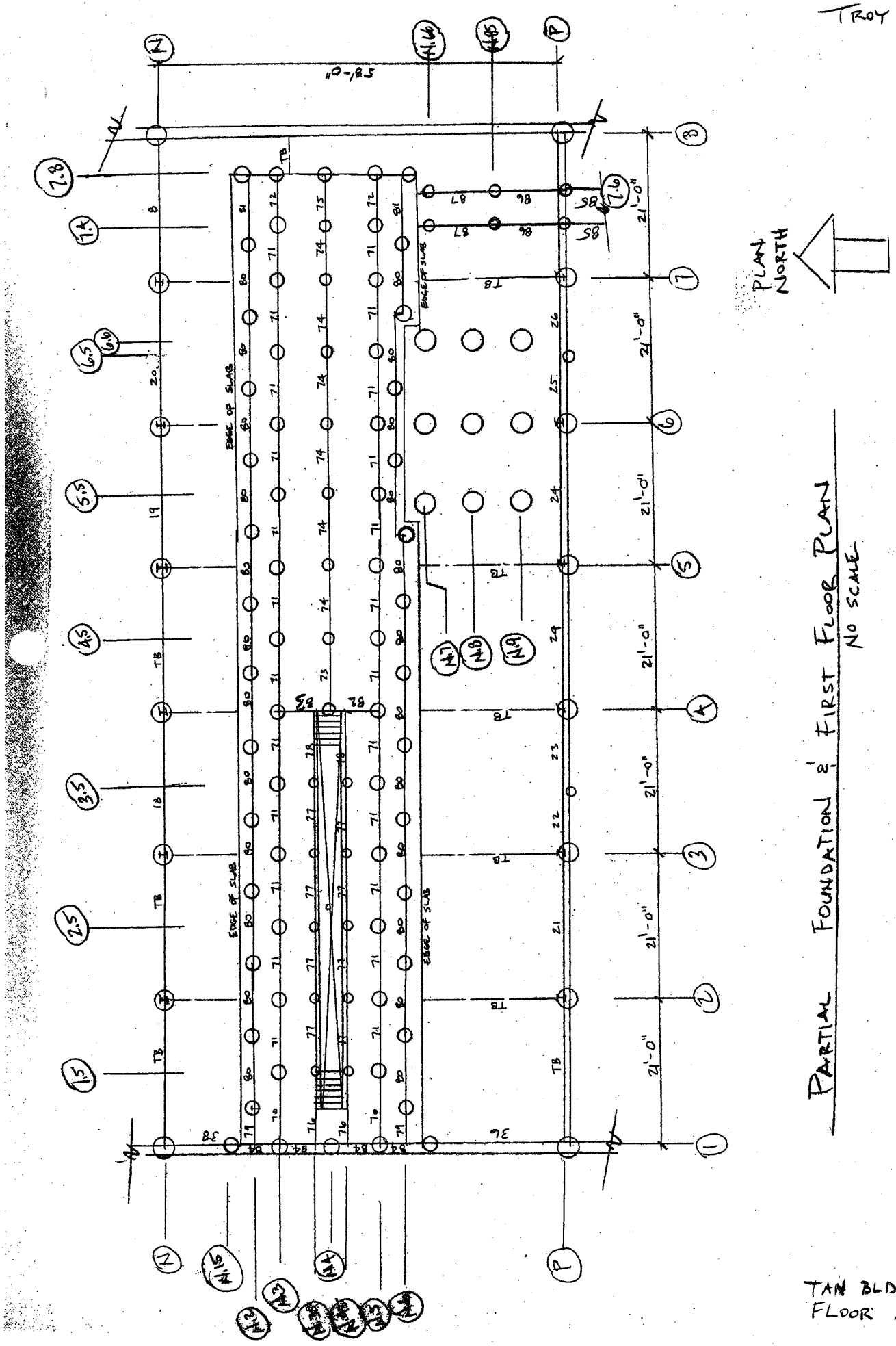

PARTIAL FOUNDATION & FIRST FLOOR PLAN
NO SCALE

TAN BLDG. 607A
FLOOR ANALYSIS

ECLIPSE ENGINEERIN
TROY LEISTIKO
3/11/04

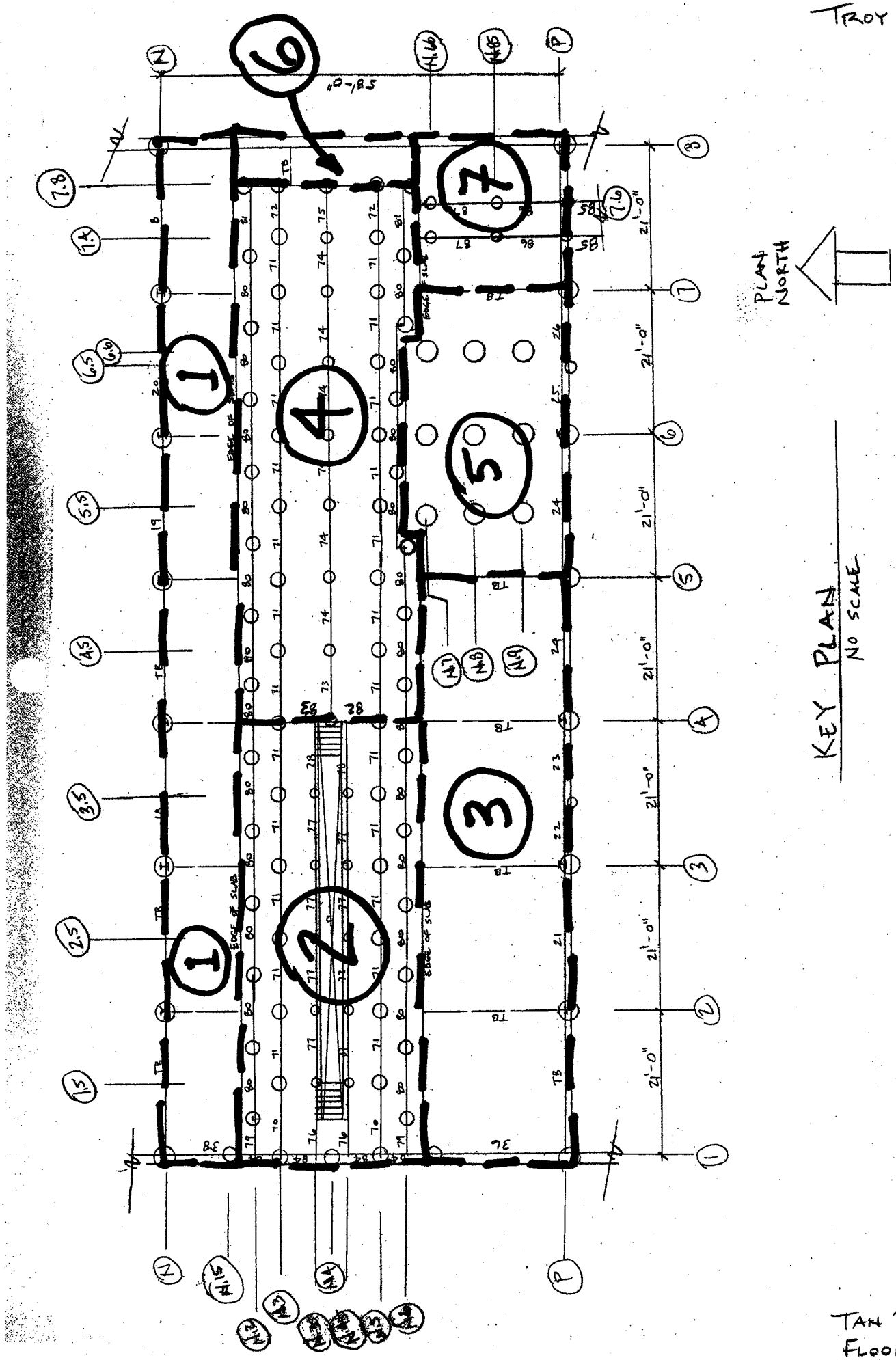

TAN BLDG. 607A
FLOOR ANALYSIS

Eclipse Engineering, Inc.
consulting engineers

Structural Calculations

Concrete Floor Analysis
Building TAN 607A, High Bay Assembly Shop
Idaho National Engineering & Environmental Laboratory
Idaho Falls, Idaho

PROFESSIONAL ENGINEER
REGISTERED
9081
3/15/04
STATE OF IDAHO
TROY LEISTIKO

Prepared For:
Portage Environmental
591 Park Avenue, Suite 201
Idaho Falls, ID 83402

structural mechanics

235 N. 1st St. West, 2nd Floor
Missoula, MT 59802
Phone: (406) 721-5733
Fax: (406) 721-4988

Structural Narrative:

The floor and foundation area bound by grid lines 1 to the west, 8 to the east, N to the north and P to the south is a system of cast-in-place concrete slabs, grade beams and drilled concrete piers. This area, also known as the HIGH BAY ASSEMBLY SHOP, is approximately 58'-0" x 147'-0" as shown on the attached PARTIAL FOUNDATION & FIRST FLOOR PLAN. Also reference the original structural drawings produced by The Ralph M. Parsons Company, dated 8/3/56.

Within the area described above, there are several different sub-areas where the configuration of the slab, grade beams and drilled piers vary as follows (also reference the attached KEY PLAN):

Sub-area 1: Defined roughly as between grids N and N.2, 1 and 8. This sub-area is an 8-inch thick slab on grade.

Sub-area 2: Defined roughly as between grids N.2 and N.6, 1 and 4. This sub-area is a system of slabs, grade beams and drilled piers. Contained within this sub-area is the ASSEMBLY PIT

Sub-area 3: Defined roughly as between grids N.6 and P, 1 and 5. This sub-area is an 8-inch thick slab on grade.

Sub-area 4: Defined roughly as between grids N.2 and N.6, 4 and 7.8. This sub-area is a system of slabs, grade beams and drilled piers.

Sub-area 5: Defined roughly as between grids N.6 and P, 5 and 7. This sub-area is an 8-inch thick slab-on-grade supplimented with drilled piers. Contained within this sub-area is the BED PLATE.

Sub-area 6: Defined roughly as between grids N.2 and N.6, 7.8 and 8. This sub-area is an 8-inch thick slab on grade.

Sub-area 7: Defined roughly as between grids N.6 and P, 7 and 8. This sub-area is an 8-inch thick slab-on-grade supplimented with grade beams and drilled piers.

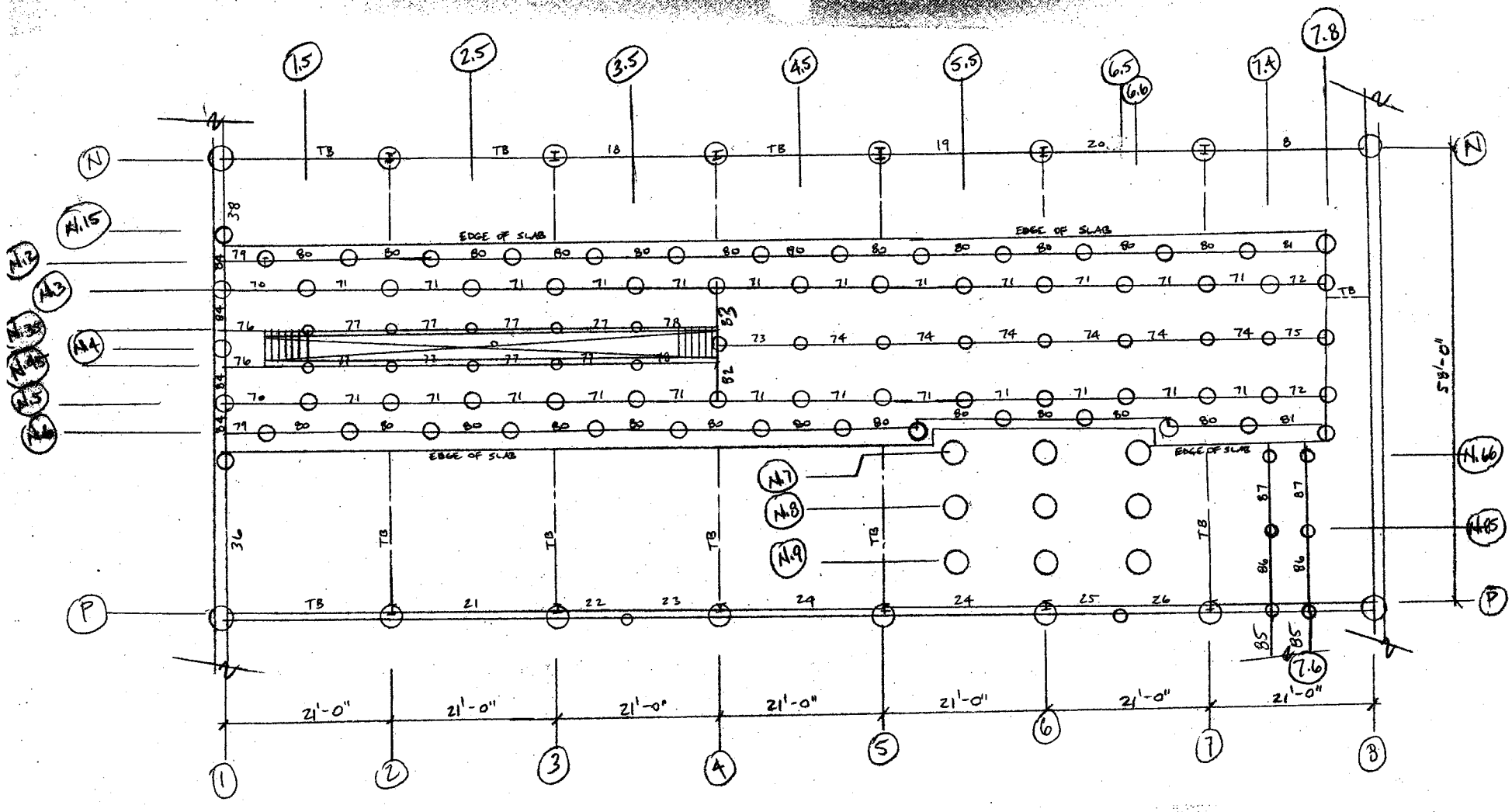

PLAN NORTH

PARTIAL FOUNDATION & FIRST FLOOR PLAN

NO SCALE

2/2

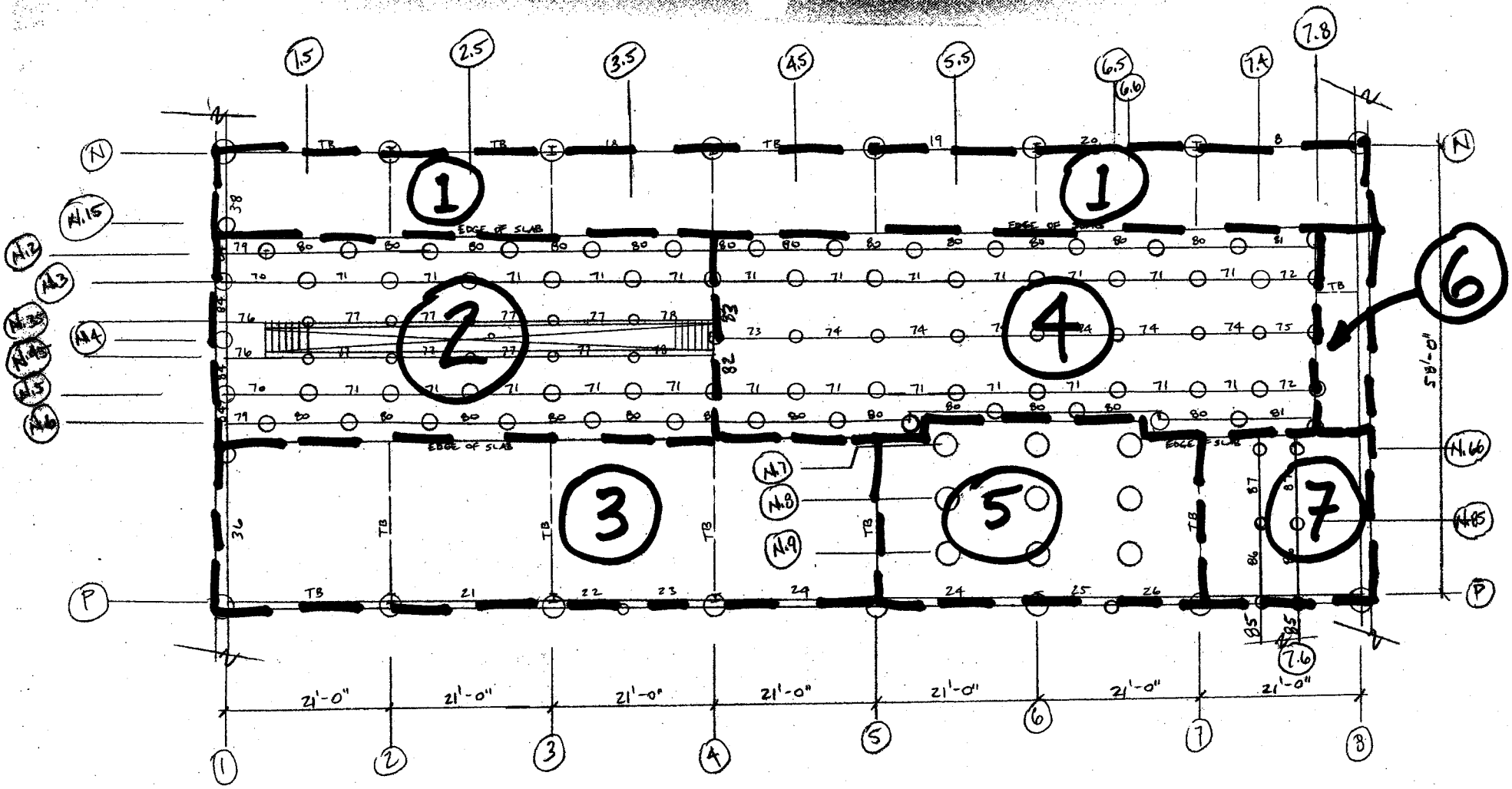

KEY PLAN
NO SCALE

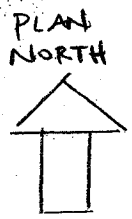

3/97

Grade Beam Table

Label	Ctr. To Ctr. Span, (ft.)	width, b (in.)	height, h (in.)	depth to rebar, d (in.)	BOTTOM BARS qty.	size		A_s (in^2)	TOP BARS qty.	size		A_s' (in^2)	STIRRUPS size		A_v (in^2)	spacing (in.)	STRENGTH $\phi_b M_n^+$ (k-ft)	$\phi_b M_n^-$ (k-ft)	$\phi_v V_n$ (k)
70	10.50	26	66	62	6	# 9	=	6.00	8	# 7	=	4.80	# 4	=	0.40	12	1077	868	207
71	10.50	26	66	62	5	# 8	=	3.95	8	# 7	=	4.80	# 4	=	0.40	12	718	868	207
72	7.75	26	66	62	6	# 9	=	6.00	8	# 7	=	4.80	# 4	=	0.40	12	1077	868	207
73	10.50	18	48	44	5	# 8	=	3.95	6	# 7	=	3.60	# 4	=	0.40	12	497	455	117
74	10.50	18	48	44	5	# 8	=	3.95	6	# 7	=	3.60	# 4	=	0.40	12	497	455	117
75	7.75	18	48	44	5	# 8	=	3.95	6	# 7	=	3.60	# 4	=	0.40	12	497	455	117
76	10.50	12	66	62	3	# 8	=	2.37	3	# 9	=	3.00	# 4	=	0.40	12	428	537	134
77	10.50	12	66	62	3	# 8	=	2.37	3	# 9	=	3.00	# 4	=	0.40	12	428	537	134
78	10.50	12	66	62	3	# 8	=	2.37	3	# 9	=	3.00	# 4	=	0.40	12	428	537	134
79	5.25	66	36	32	10	# 10	=	12.70	20	# 6	=	8.80	# 4	=	0.40	12	1150	812	216
80	10.50	66	36	32	8	# 10	=	10.16	20	# 6	=	8.80	# 4	=	0.40	12	931	812	216
81	10.50	66	36	32	10	# 10	=	12.70	20	# 6	=	8.80	# 4	=	0.40	12	1150	812	216
82	7.50	15	66	62	4	# 8	=	3.16	4	# 8	=	3.16	# 4	=	0.40	12	569	569	149
83	7.50	15	66	62	4	# 8	=	3.16	4	# 8	=	3.16	# 4	=	0.40	12	569	569	149
84	8.00	18	66	62	2	# 9	=	2.00	2	# 9	=	2.00	# 4	=	0.40	12	366	366	165
85	10.00	20	35	31	4	# 7	=	2.40	3	# 8	=	2.37	# 4	=	0.40	12	215	212	88
86	9.50	20	35	31	4	# 7	=	2.40	3	# 8	=	2.37	# 4	=	0.40	12	215	212	88
87	9.50	20	35	31	4	# 7	=	2.40	3	# 8	=	2.37	# 4	=	0.40	12	215	212	88
TB	N/A	16	24	20	2	# 5	=	0.62	2	# 5	=	0.62	N/ A	=	0.00	12	37	37	27

Rebar Area Sub-Table	
Bar Size	Area (in^2)
3	0.11
4	0.20
5	0.31
6	0.44
7	0.60
8	0.79
9	1.00
10	1.27
11	1.56

Properties & Formulae

f'_c = 2500 psi

F_y = 40000 psi

F_v = 40000 psi

ϕ_b = 0.9

ϕ_v = 0.85

$a = \dfrac{A_s * F_y}{0.85 * f'_c * b}$ OR $\dfrac{A_s' * F_y}{0.85 * f'_c * b}$

$M_n^+ = A_s * F_y * (d - a/2)$

$M_n^- = A_s' * F_y * (d - a/2)$

$V_n = (V_c + A_v * F_v * d/s)$

where $V_c = 2 * \mathrm{sqrt}(f'_c) * b * d$

4/27

SAMPLE CALCULATION (UNABRIDGED)

Label : Grade Beam 70, M+

CONCRETE BEAMS

$k := 1000 \cdot lb$ $\quad plf := \frac{lb}{ft}$ $\quad psi := \frac{lb}{in^2}$

$\phi_b := 0.9$ $\quad \phi_v := 0.85$

$b := 26 \cdot in$ $\quad h := 66 \cdot in$ $\quad d := h - 4 \cdot in$ $\quad d = 62\,in$

$f_c := 2500 \cdot psi$ $\quad f_y := 40000 \cdot psi$ $\quad f_v := 40000 \cdot psi$

$E := 57000 \cdot \sqrt{f_c} \cdot \frac{lb^{\frac{1}{2}}}{in}$ $\quad E = 2850000 \frac{lb}{in^2}$ $\quad I_g := \frac{b \cdot h^3}{12}$

$\rho_{min} := \frac{200 \cdot psi}{f_y}$ $\quad A_{min} := \rho_{min} \cdot b \cdot d$ $\quad A_{min} = 8.06\,in^2$

Analyze (6) #9 Bars bottom reinf.
f'_c = 2,500 psi, f_y = 40,000 psi
#4 stirrups @ 12" o.c.

$A := 6.00 \cdot in^2$ $\quad A = 6\,in^2$

$\rho := \frac{A}{b \cdot d}$ $\quad \rho = 0.00372$ $\quad \rho_{min} = 0.005$

$a := \frac{A \cdot f_y}{0.85 \cdot f_c \cdot b}$ $\quad M_d := \phi_b \cdot A \cdot f_y \cdot \left(d - \frac{a}{2}\right)$ $\quad \phi M_d = 1076.905\,k \cdot ft$

$A_v := 0.40 \cdot in^2$ $\quad V_c := 2 \cdot \sqrt{f_c} \cdot b \cdot d \cdot \frac{lb^{\frac{1}{2}}}{in}$ $\quad V_c = 161.2\,k$

$s := 12 \cdot in$ $\quad \phi V_d := \phi_v \cdot \left(V_c + \frac{A_v \cdot f_v \cdot d}{s}\right)$ $\quad \phi V_d = 207.3\,k$

Eclipse Engineering, Inc.
consulting engineers
235 N. First St. West, 2nd Floor
Missoula, MT 59802
Ph: (406) 721-5733
Fax: (406) 721-4988
www.eclipse-engineering.com

TAN BLDG 607A

FLOOR ANALYSIS

TROY 3/4/04

ANALYSIS NOTES

EFF. SPAN =
- CENTER TO CENTER OF SUPPORTS FOR ANALYSIS
- DESIGN AT FACES OF SUPPORTS (MOMENTS)
- CLEAR SPAN ANALYSIS FOR THE SLABS.
- DESIGN FOR V_u AT d FROM FACE OF SUPPORT

CODE

8.2.4 — Consideration shall be given to effects of forces due to prestressing, crane loads, vibration, impact, shrinkage, temperature changes, creep, expansion of shrinkage-compensating concrete, and unequal settlement of supports.

8.3 — Methods of analysis

8.3.1 — All members of frames or continuous construction shall be designed for the maximum effects of factored loads as determined by the theory of elastic analysis, except as modified according to 8.4. It shall be permitted to simplify design by using the assumptions specified in 8.6 through 8.9.

8.3.2 — Except for prestressed concrete, approximate methods of frame analysis shall be permitted for buildings of usual types of construction, spans, and story heights.

8.3.3 — As an alternate to frame analysis, the following approximate moments and shears shall be permitted for design of continuous beams and one-way slabs (slabs reinforced to resist flexural stresses in only one direction), provided:

(a) There are two or more spans;

(b) Spans are approximately equal, with the larger of two adjacent spans not greater than the shorter by more than 20 percent;

(c) Loads are uniformly distributed;

(d) Unit live load does not exceed three times unit dead load; and

(e) Members are prismatic.

Positive moment	
End spans	
Discontinuous end unrestrained	$w_u \ell_n^2/11$
Discontinuous end integral with support	$w_u \ell_n^2/14$
Interior spans	$w_u \ell_n^2/16$

COMMENTARY

to the structure should be considered in the analysis of the structure because they may lead to increased design forces in some or all elements. Special provisions for seismic design are given in Chapter 21.

R8.2.4 — Information is accumulating on the magnitudes of these various effects, especially the effects of column creep and shrinkage in tall structures,[8.1] and on procedures for including the forces resulting from these effects in design.

R8.3 — Methods of analysis

R8.3.1 — Factored loads are service loads multiplied by appropriate load factors. If the alternate design method of Appendix A is used, the loads used in design are service loads (load factors of unity). For both the strength design method and the alternate design method, elastic analysis is used to obtain moments, shears, and reactions.

R8.3.3 — The approximate moments and shears give reasonably conservative values for the stated conditions if the flexural members are part of a frame or continuous construction. Because the load patterns that produce critical values for moments in columns of frames differ from those for maximum negative moments in beams, column moments should be evaluated separately.

ℓ_n = clear span

7/27

CODE

Negative moments at exterior face of first interior support

Two spans ..... $w_u \ell_n^2/9$
More than two spans ..... $w_u \ell_n^2/10$

Negative moment at other faces of interior supports ..... $w_u \ell_n^2/11$

Negative moment at face of all supports for

Slabs with spans not exceeding 10 ft; and beams where ratio of sum of column stiffnesses to beam stiffness exceeds eight at each end of the span ..... $w_u \ell_n^2/12$

Negative moment at interior face of exterior support for members built integrally with supports

Where support is spandrel beam ..... $w_u \ell_n^2/24$
Where support is a column ..... $w_u \ell_n^2/16$

Shear in end members at face of first interior support ..... $1.15\, w_u \ell_n/2$

Shear at face of all other supports ..... $w_u \ell_n/2$

8.4 — Redistribution of negative moments in continuous nonprestressed flexural members

For criteria on moment redistribution for prestressed concrete members, see 18.10.4.

8.4.1 — Except where approximate values for moments are used, it shall be permitted to increase or decrease negative moments calculated by elastic theory at supports of continuous flexural members for any assumed loading arrangement by not more than

$$20\left(1 - \frac{\rho - \rho'}{\rho_b}\right) \text{ percent}$$

8.4.2 — The modified negative moments shall be used for calculating moments at sections within the spans.

COMMENTARY

l_n = clear span

R8.4 — Redistribution of negative moments in continuous nonprestressed flexural members

Moment redistribution is dependent on adequate ductility in plastic hinge regions. These plastic hinge regions develop at points of maximum moment and cause a shift in the elastic moment diagram. The usual result is a reduction in the values of negative moments in the plastic hinge region and an increase in the values of positive moments from those computed by elastic analysis. Because negative moments are determined from one loading arrangement and positive moments from another, each section has a reserve capacity that is not fully utilized for any one loading condition. The plastic hinges permit the utilization of the full capacity of more cross sections of a flexural member at ultimate loads.

Using conservative values of ultimate concrete strains and lengths of plastic hinges derived from extensive tests, flexural members with small rotation capacity were analyzed for moment redistribution varying from 10 to 20 percent, depending on the reinforcement ratio. The results were found to be conservative (see Fig. R8.4). Studies by Cohn[8.2] and Mattock[8.3] support this conclusion and indicate that

8/27

Eclipse Engineering, Inc.
consulting engineers
235 N. First St. West, 2nd Floor
Missoula, MT 59802
Ph: (406) 721-5733
Fax: (406) 721-4988
www.eclipse-engineering.com

TAN BLDG 607A
FLOOR ANALYSIS – SUB-AREAS 1, 3, 6
TROY 3/4/04

SUB-AREAS (1), (3), (6)

EACH OF THESE SUB-AREAS IS AN 8" THICK SLAB-ON-GRADE THAT IS REINFORCED W/ 4"×4" - #6/#6 WELDED WIRE FABRIC.

IN ACCORDANCE W/ ACI 807, THE CAPACITY FOR THIS TYPE SLAB IS 500 PSF SUPERIMPOSED LIVE LOAD. (SEE ATTACHED TABLE)

CAPACITY = 500 PSF LIVE LOAD

SLABS ON GROUND *

For any slab on the ground, adequate preparation of subgrade for drainage and compaction is of prime importance. Dowelled expansion joints and weakened plane contraction joints should be carefully located, including expansion joints at all walls.

The design of slabs on the ground to distribute concentrated or uniform loads involves the elastic properties of the subsoil and the slab itself. An analysis can be made but is quite involved. Slabs for the very lightest occupancy should be not less than 4″ thick, and slabs for other occupancies may be empirically selected, the following being about minimum and sometimes less than what is required by ACI 807 for supported slabs:—

Occupancy **	Min. Slab Thickness	Reinforcement ‡
Sub-slabs under other slabs	2″	None
Domestic or light commercial (loaded less than 100 psf)	4″	One layer 6 x 6 10/10 welded wire fabric, minimum for ideal conditions; 6 x 6 8/8 for average conditions.
Commercial—institutional—barns (loaded 100-200 psf)	5″	One layer 6 x 6 8/8 welded wire fabric or one layer 6 x 6 6/6.
Industrial (loaded not over 400-500 psf) and pavements for industrial plants, gas stations, and garages	6″	One layer 6 x 6 6/6 welded wire fabric or one layer 6 x 6 4/4.
Industrial (loaded 600–800 psf) and heavy pavements for industrial plants, gas stations, and garages	6″	Two layers 6 x 6 6/6 welded wire fabric or two layers 6 x 6 4/4
Industrial (loaded 1500 psf) †	7″	Two mats of bars (one top, one bottom), each of #4 bars @ 12″ c/c, each way
Industrial (loaded 2500 psf) †	8″	Two mats of bars (one top, one bottom), each of #5 bars @ 12″ c/c, each way
Industrial (loaded 3000–3500 psf) †	9″	Two mats of bars (one top, one bottom), each of #5 bars @ 8″ to 12″ c/c, each way

* For further details, see "Concrete Floors on Ground," and "Concrete Airport Pavement," Portland Cement Association, 33 West Grand Avenue, Chicago, Illinois, 1952, and "Design of Concrete Floors on Ground for Warehouse Loadings," Aug. 1957 Journal, American Concrete Institute, P. O. Box 4754, Redford Sta., Detroit 19, Mich.

** For loads in excess of, say, 500 psf, use at least 3000 psi quality controlled concrete, and investigate subsoil conditions with extra care. Fill material and compaction should be equivalent to ordinary highway practice. If laboratory control of compaction is available, the load capacities can be increased in the ratio of the actual compaction coefficient, k, to 100.

† For loads in excess of, say, 1500 psf the subsoil conditions should be investigated with extra care.

‡ Place first layer of reinforcement 2 in. below top of slab; second layer, 2 in. up from bottom of slab.

Eclipse Engineering, Inc.
consulting engineers
235 N. First St. West, 2nd Floor
Missoula, MT 59802
Ph: (406) 721-5733
Fax: (406) 721-4988
www.eclipse-engineering.com

TAN BLDG 607A
FLOOR ANALYSIS
TROY 3/4/04

SUB-AREA (2) - REF. (A / S115)

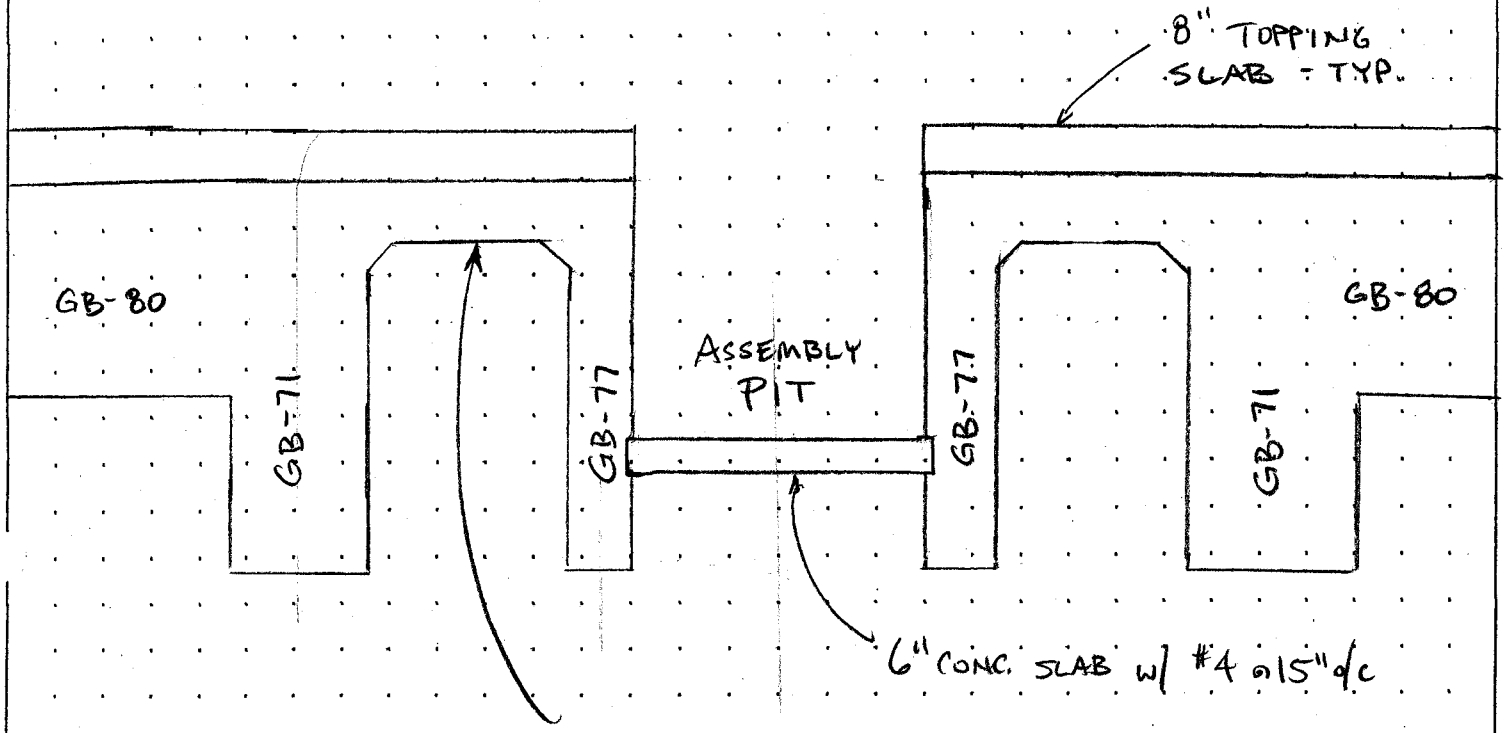

10" CONC SLAB w/ # 6 @ 10" o.c.
THAT IS 15" DEEP AT THE GRADE BEAMS
d to A_s = 7"
d to A'_s = 13"

TYPICAL CROSS SECTION
NO SCALE

*CAPACITY = 2615 PSF LIVE LOAD

* EXCEPT THE ASSEMBLY PIT WHICH IS LIMITED TO 285 PSF LIVE LOAD

C.I.P. Concrete Beam or Slab Analysis - Determine max. superimposed (live) load allowed

Beam Label	**Assembly Pit, 6" slab**	**Typical 15" slab**	**70**	**71**	**72**
Depth of Beam (in) **h**	6	10	66	66	66
Depth to Reinf. (in) **d**	4	7	62	62	62
Width of Beam (in) **b**	15	10	26	26	26
Slab Section or Beam Size	**15 x 6**	**10 x 10**	**26 x 66**	**26 x 66**	**26 x 66**
Design Criteria					
	360	360	360	360	360
Δ limit due to Long-Term Loads (L /) applied after non-structural elements are attached	480	480	480	480	480
% of live load that is long-term	20%	20%	20%	20%	20%
% of live load that is not long-term	80%	80%	80%	80%	80%
$\lambda = \xi/(1+50p')$, $\xi = 2.0$ for long-term lo	2.00	1.52	1.74	2.00	2.00
Concrete unit weight (pcf)	150	150	150	150	150
Floor Uniform Dead Load (psf)	75	100	100	100	100
Floor Uniform Live Load (psf)	285	2615	5000	5000	5000
Floor Beam Linear Dead Load (plf)	93.75	104.17	1787.50	1787.50	1787.50
Analysis, ref. ACI 318-99, sections 8.7 (span length), 8.3 (methods of analysis), and 11.1.3.1					
Span (Ctr to Ctr of Supports) (ft)	6	5	10.5	10.5	7.75
Width of Supports (in)	12	24	26	26	26
Analyze Ctr-Ctr(0) or Clr Span(1)	1	1	1	1	1
Effective Span (ft)	5	3	8.33333333	8.33333333	5.58333333
Tributary width (ft)	1.25	0.83	4.50	4.50	4.50
Include beam wt? No(0)/Yes(1)	0	1	1	1	1
Uniform Dead Load (plf)	93.75	187.47	2237.50	2237.50	2237.50
Uniform Live Load (plf)	356.25	2178.30	22500.00	22500.00	22500.00
U = 1.4D + 1.7L (plf)	737	3966	41383	41383	41383
V.u (lb), $1.15\omega_u\ell_n/2$	**2,119**	**6,841**	**198,291**	**198,291**	**132,855**
V.u (lb), $\omega_u\ell_n/2$	**1,842**	**5,948**	**172,427**	**172,427**	**115,526**
V.u (lb), $\omega_u\ell_n/2 - d\omega_u$	**1,597**	**3,635**	**-41,383**	**-41,383**	**-98,283**
Choose V.u	1,842	5,948	198,291	172,427	115,526
M^+.u (lb.ft), $\omega_u\ell_n/8$	**2,303**	**4,461**	**359,223**	**359,223**	**161,255**
M^+.u (lb.ft), $\omega_u\ell_n/11$	**1,675**	**3,245**	**261,253**	**261,253**	**117,277**
M^+.u (lb.ft), $\omega_u\ell_n/14$	**1,316**	**2,549**	**205,270**	**205,270**	**92,146**
M^+.u (lb.ft), $\omega_u\ell_n/16$	**1,151**	**2,231**	**179,612**	**179,612**	**80,628**
Choose M^+.u	2,303	2,231	261,253	179,612	80,628
M^-.u (lb.ft), $\omega_u\ell_n/9$	**2,047**	**3,966**	**319,309**	**319,309**	**143,338**
M^-.u (lb.ft), $\omega_u\ell_n/10$	**1,842**	**3,569**	**287,378**	**287,378**	**129,004**
M^-.u (lb.ft), $\omega_u\ell_n/11$	**1,675**	**3,245**	**261,253**	**261,253**	**117,277**
M^-.u (lb.ft), $\omega_u\ell_n/12$	**1,535**	**2,974**	**239,482**	**239,482**	**107,503**
M^-.u (lb.ft), $\omega_u\ell_n/16$	**1,151**	**2,231**	**179,612**	**179,612**	**80,628**
M^-.u (lb.ft), $\omega_u\ell_n/24$	**768**	**1,487**	**119,741**	**119,741**	**53,752**
	0	**0**	**0**	**0**	**0**
Choose M^-.u	0	2,974	287,378	261,253	117,277

CONTINUED

Strength Design	Pit, 6" slab	15" slab	70
Flexural Steel Bars (Bottom)	**(1) #4**	**(1) #6**	**(6) #9**
Flexural Steel Area (in^2), **As**	0.20	0.44	6.00
Shear Steel Bars	**None**	**None**	**(2) #4**
Shear Steel Area (in^2), **Av**	0.00	0.00	0.40
spacing of shear steel (in), **s**	999	999	12
Flexural Steel Bars (Top)	**None**	**(1) #6**	**(8) #7**
Flexural Steel Area (in^2), **A's**	0.00	0.44	4.80
Concrete Strength (psi), f'c	**2500**	**2500**	**2500**
Flexural Steel (psi), fy	**40000**	**40000**	**40000**
Shear Steel (psi), fy	**40000**	**40000**	**40000**
Depth of top comp. block (in), **a**	0.25	0.83	4.34
ρ	0.00333	0.00629	0.00372
ρ,min	0.00500	0.00500	0.00500
Min. reinf. Check	**more steel**	**OK**	**more steel**
β_1	0.85	0.85	0.85
ρ,max = 0.75*ρ,balanced	0.02320	0.02320	0.02320
Max. reinf. Check	**OK**	**OK**	**OK**
Depth of bottom comp. block (in), **a**	0.00	0.83	3.48
ρ' (manual check min. & max.)	0.00000	0.00629	0.00298
ϕ.b	0.9	0.9	0.9
ϕ.v	0.85	0.85	0.85
Bending Strength, M^+.d = ϕM^+.n (lb*ft)	**2,325**	**8,693**	**1,076,905**
Check bending strength	**OKAY**	**OKAY**	**OKAY**
Bending Strength, M^-.d = ϕM^-.n (lb*ft)	**0**	**8,693**	**867,779**
Check bending strength	**OKAY**	**OKAY**	**OKAY**
Shear Strength, V.d = ϕV.n (lb)	**5,100**	**5,950**	**207,287**
Check shear strength	**OKAY**	**OKAY**	**OKAY**
Deflection Design (Valid for simple spans only)			
f.r, modulus of rupture (psi)	375	375	375
I.g, Gross moment of inertia (in^4)	270	833	622,908
y.t, distance from N.A. to tension face	3.00	5.00	33.00
M.cr, Cracking Moment (lb*ft)	2,813	5,208	589,875
M.max, Service Moment	1,406	2,661	214,735
E.s, Elastic Mod. Of Steel (psi)	29,000,000	29,000,000	29,000,000
E.c, Elastic Mod. Of concrete (psi)	2,850,000	2,850,000	2,850,000
n = E.s/E.c	10.2	10.2	10.2
c = d[(nρ*(nρ+2))^1/2-nρ]	0.91	2.10	14.88
I.cr, Cracked moment of inertia (in^4)	23	138	164,108
I.e, Effective moment of intertia (in^4)	**270**	**833**	**622,908**
Δ, immediate due to live load (in)	0.007	0.002	0.001
Span / deflection	**9216**	**21537**	**72716**
Check live deflection	**OKAY**	**OKAY**	**OKAY**
Δ, long term from dead load (in)	0.003	0.000	0.000
Δ, lg. term from sustained live ld. (in)	0.004	0.001	0.001
Δ, instantaneous live load (in)	0.005	0.001	0.001
Δ, after attachment of non-structural elements (in.) = Rows 95+96+97	0.013	0.002	0.002
Span / deflection	**4784**	**15806**	**52579**
Check live deflection	**OKAY**	**OKAY**	**OKAY**

C.I.P. Concrete Beam or Slab Analysis - Determine max. superimposed (live) load allowed

Beam Label	**76**	**77**	**78**	**79**	**80**
Depth of Beam (in) **h**	66	66	66	36	36
Depth to Reinf. (in) **d**	62	62	62	32	32
Width of Beam (in) **b**	12	12	12	66	66
Slab Section or Beam Size	**12 x 66**	**12 x 66**	**12 x 66**	**66 x 36**	**66 x 36**
Design Criteria					
	360	360	360	360	360
Δ limit due to Long-Term Loads (L /)	480	480	480	480	480
applied after non-structural elements are attached					
% of live load that is long-term	20%	20%	20%	20%	20%
% of live load that is not long-term	80%	80%	80%	80%	80%
$\lambda = \xi/(1+50p')$, $\xi = 2.0$ for long-term	1.66	1.66	1.66	2.00	2.00
Concrete unit weight (pcf)	150	150	150	150	150
Floor Uniform Dead Load (psf)	100	100	100	100	100
Floor Uniform Live Load (psf)	2933	3405	2933	5000	5000
Floor Beam Linear Dead Load (plf)	825.00	825.00	825.00	2475.00	2475.00
Analysis, ref. ACI 318-99, sections 8.7 (span length), 8.3 (methods of analysis), and 11.1.3.1					
Span (Ctr to Ctr of Supports) (ft)	10.5	10.5	10.5	5.25	10.5
Width of Supports (in)	22	22	22	28	28
Analyze Ctr-Ctr(0) or Clr Span(1)	1	1	1	1	1
Effective Span (ft)	8.66666667	8.66666667	8.66666667	2.91666667	8.16666667
Tributary width (ft)	5.00	5.00	5.00	4.00	4.00
Include beam wt? No(0)/Yes(1)	1	1	1	1	1
Uniform Dead Load (plf)	1325.00	1325.00	1325.00	2875.00	2875.00
Uniform Live Load (plf)	14665.00	17025.00	14665.00	20000.00	20000.00
U = 1.4D + 1.7L (plf)	26786	30798	26786	38025	38025
V.u (lb), $1.15\omega_u\ell_n/2$	**133,481**	**153,474**	**133,481**	**63,771**	**178,559**
V.u (lb), $\omega_u\ell_n/2$	**116,071**	**133,456**	**116,071**	**55,453**	**155,269**
V.u (lb), $\omega_u\ell_n/2 - d\omega_u$	**-22,321**	**-25,665**	**-22,321**	**-45,947**	**53,869**
Choose V.u	133,481	133,456	133,481	63,771	155,269
M^+.u (lb.ft), $\omega_u\ell_n/8$	**251,486**	**289,154**	**251,486**	**40,435**	**317,007**
M^+.u (lb.ft), $\omega_u\ell_n/11$	**182,899**	**210,294**	**182,899**	**29,407**	**230,551**
M^+.u (lb.ft), $\omega_u\ell_n/14$	**143,706**	**165,231**	**143,706**	**23,105**	**181,147**
M^+.u (lb.ft), $\omega_u\ell_n/16$	**125,743**	**144,577**	**125,743**	**20,217**	**158,504**
Choose M^+.u	182,899	144,577	182,899	29,407	158,504
M^-.u (lb.ft), $\omega_u\ell_n/9$	**223,543**	**257,026**	**223,543**	**35,942**	**281,784**
M^-.u (lb.ft), $\omega_u\ell_n/10$	**201,189**	**231,323**	**201,189**	**32,348**	**253,606**
M^-.u (lb.ft), $\omega_u\ell_n/11$	**182,899**	**210,294**	**182,899**	**29,407**	**230,551**
M^-.u (lb.ft), $\omega_u\ell_n/12$	**167,657**	**192,770**	**167,657**	**26,956**	**211,338**
M^-.u (lb.ft), $\omega_u\ell_n/16$	**125,743**	**144,577**	**125,743**	**20,217**	**158,504**
M^-.u (lb.ft), $\omega_u\ell_n/24$	**83,829**	**96,385**	**83,829**	**13,478**	**105,669**
	0	**0**	**0**	**0**	**0**
Choose M^-.u	201,189	192,770	201,189	32,348	230,551

CONTINUED

Strength Design	76	77	78
Flexural Steel Bars (Bottom)	(3) #8	(3) #8	(3) #8
Flexural Steel Area (in^2), **As**	2.37	2.37	2.37
Shear Steel Bars	(2) #4	(2) #4	(2) #4
Shear Steel Area (in^2), **Av**	0.40	0.40	0.40
spacing of shear steel (in), **s**	12	12	12
Flexural Steel Bars (Top)	(3) #9	(3) #9	(3) #9
Flexural Steel Area (in^2), **A's**	3.00	3.00	3.00
Concrete Strength (psi), f'c	2500	2500	2500
Flexural Steel (psi), fy	40000	40000	40000
Shear Steel (psi), fy	40000	40000	40000
Depth of top comp. block (in), **a**	3.72	3.72	3.72
ρ	0.00319	0.00319	0.00319
ρ,min	0.00500	0.00500	0.00500
Min. reinf. Check	more steel	more steel	more steel
β_1	0.85	0.85	0.85
ρ,max = 0.75*ρ,balanced	0.02320	0.02320	0.02320
Max. reinf. Check	OK	OK	OK
Depth of bottom comp. block (in), **a**	4.71	4.71	4.71
ρ' (manual check min. & max.)	0.00403	0.00403	0.00403
ϕ.b	0.9	0.9	0.9
ϕ.v	0.85	0.85	0.85
Bending Strength, M^+.d = ϕM^+.n (lb*ft)	**427,604**	**427,604**	**427,604**
Check bending strength	OKAY	OKAY	OKAY
Bending Strength, M^-.d = ϕM^-.n (lb*ft)	**536,824**	**536,824**	**536,824**
Check bending strength	OKAY	OKAY	OKAY
Shear Strength, V.d = ϕV.n (lb)	**133,507**	**133,507**	**133,507**
Check shear strength	OKAY	OKAY	OKAY
Deflection Design (Valid for simple spans only)			
f.r, modulus of rupture (psi)	375	375	375
I.g, Gross moment of inertia (in^4)	287,496	287,496	287,496
y.t, distance from N.A. to tension face	33.00	33.00	33.00
M.cr, Cracking Moment (lb*ft)	272,250	272,250	272,250
M.max, Service Moment	150,128	172,286	150,128
E.s, Elastic Mod. Of Steel (psi)	29,000,000	29,000,000	29,000,000
E.c, Elastic Mod. Of concrete (psi)	2,850,000	2,850,000	2,850,000
n = E.s/E.c	10.2	10.2	10.2
c = d[(nρ*(nρ+2))^1/2-nρ]	13.90	13.90	13.90
I.cr, Cracked moment of inertia (in^4)	66,537	66,537	66,537
I.e, Effective moment of intertia (in^4)	**287,496**	**287,496**	**287,496**
Δ, immediate due to live load (in)	0.002	0.003	0.002
Span / deflection	**45776**	**39430**	**45776**
Check live deflection	OKAY	OKAY	OKAY
Δ, long term from dead load (in)	0.000	0.000	0.000
Δ, lg. term from sustained live ld. (in)	0.001	0.001	0.001
Δ, instantaneous live load (in)	0.002	0.002	0.002
Δ, after attachment of non-structural elements (in.) = Rows 95+96+97	0.003	0.004	0.003
Span / deflection	**32941**	**28536**	**32941**
Check live deflection	OKAY	OKAY	OKAY

Eclipse Engineering, Inc.
consulting engineers
235 N. First St. West, 2nd Floor
Missoula, MT 59802
Ph: (406) 721-5733
Fax: (406) 721-4988
www.eclipse-engineering.com

TAN BUILDING 607 A

FLOOR ANALYSIS - SUB-AREA 2

TROY 3/10/04

$\boxed{82}$ (83 IS THE SAME)

$h = 66''$, $b = 15''$, $\gamma_c = 150$ PCF

BM. WT. = 1031 PLF

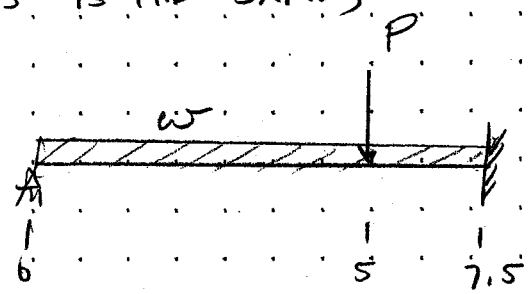

$P_D = \frac{10.5'}{2}(1325 \text{ PLF}) = 6956 \text{ LB.}$ (REF. 78)

$P_L = \frac{10.5'}{2}(1466.5 \text{ PLF}) = 7699 \text{ LB.}$ (REF. 78)

$w_D = 1031 \text{ PLF} = 1031 \text{ PLF}$

$P_u = 1.4P_D + 1.7P_L = 140.6 \text{ K}$

$w_u = 1.4 w_D = 1.44 \text{ KLF}$

$V_u = \frac{5 w_u (7.5')}{8} + \frac{P_u (5')}{2(7.5')^3}\left(3(7.5')^2 - (5')^2\right) = \underline{120 \text{ K}}$

$M_u^+ = \frac{P_u (2.5')^2}{2(7.5')^3}\left(5' + 2(7.5')\right) 5' = \underline{104.1 \text{ K}'}$

$M_u^- = \frac{P_u (2.5')(5')}{2(7.5')^2}(5' + 7.5') = \underline{195.3 \text{ K}'}$

$\frac{D}{C} = 0.805$

GOVERNED BY SHEAR

LIVE LOAD = 2933 PSF

Eclipse Engineering, Inc.
consulting engineers
235 N. First St. West, 2nd Floor
Missoula, MT 59802
Ph: (406) 721-5733
Fax: (406) 721-4988
www.eclipse-engineering.com

TAN BUILDING 607 A

FLOOR ANALYSIS - SUB AREA 2

TROY 3/10/04

84

$h = 66''$, $b = 18''$, $\gamma_c = 150$ PCF

BM. WT. = 1238 PLF

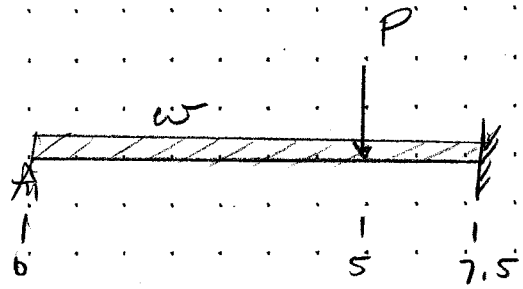

$P_D = \frac{10.5'}{2}(13.25 \text{ PLF}) = 6956 \text{ LB.}$ (REF. 76)

$P_L = \frac{10.5'}{2}(1466.5 \text{ PLF}) = 76991 \text{ LB.}$ (REF. 76)

$w_D = 1238 \text{ PLF} = 1238 \text{ PLF}$

$P_u = 1.4P_D + 1.7P_L = 140.6 \text{ K}$

$w_u = 1.4 w_D = 1.73 \text{ KLF}$

$V_u = \frac{5 w_u (7.5')}{8} + \frac{P_u (5')}{2(7.5')^3} \cdot \left(3(7.5')^2 - (5')^2\right) = \underline{128\text{K}}$

$M_u^+ = \frac{P_u (2.5')^2}{2(7.5')^3}\left(5' + 2(7.5')\right) 5' = \underline{104.1 \text{ K}'}$

$M_u^- = \frac{P_u (2.5')(5')}{2(7.5')^2}\left(5' + 7.5'\right) = \underline{195.3 \text{ K}'}$

$\frac{D}{C} = 0.776$

GOVERNED BY SHEAR

LIVE LOAD = 2933 PSF

Eclipse Engineering, Inc.
consulting engineers
235 N. First St. West, 2nd Floor
Missoula, MT 59802
Ph: (406) 721-5733
Fax: (406) 721-4988
www.eclipse-engineering.com

TAN BLDG 607A
FLOOR ANALYSIS - SUB-AREA 4
TROY 3/4/04

SUB-AREA (4) - REF. (B / S115)

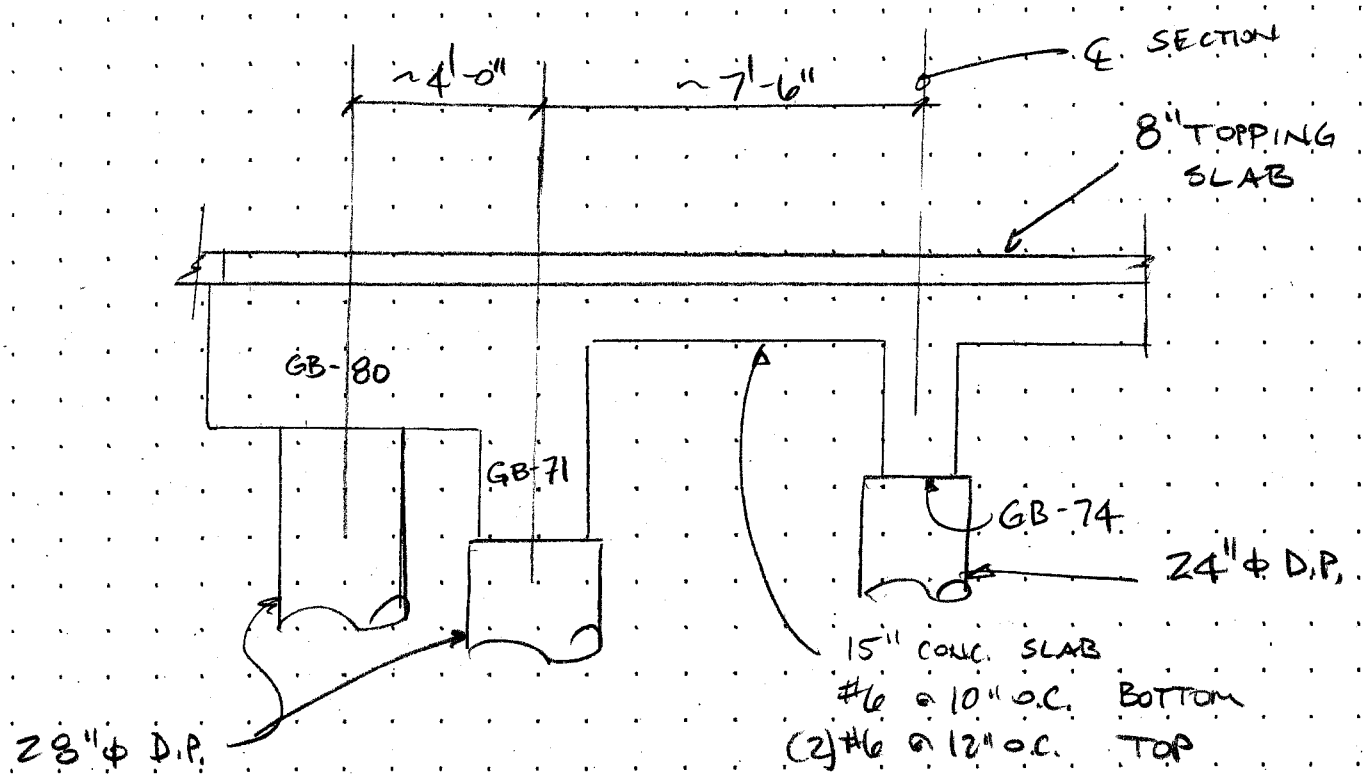

TYPICAL CROSS SECTION
NO SCALE

CAPACITY = 1,542 PLF (GOVERNED BY 73)
LIVE LOAD

C.I.P. Concrete Beam or Slab Analysis - Determine max. superimposed (live) load allowed

Beam Label	Typical 15" slab	71	72	73	74
Depth of Beam (in) **h**	15	66	66	48	48
Depth to Reinf. (in) **d**	12	62	62	44	44
Width of Beam (in) **b**	12	26	26	18	18
Slab Section or Beam Size	**12 x 15**	**26 x 66**	**26 x 66**	**18 x 48**	**18 x 48**
Design Criteria					
	360	360	360	360	360
Δ limit due to Long-Term Loads (L /) applied after non-structural elements are attached	480	480	480	480	480
% of live load that is long-term	20%	20%	20%	20%	20%
% of live load that is not long-term	80%	80%	80%	80%	80%
$\lambda = \xi/(1+50p')$, $\xi = 2.0$ for long-term lo	1.53	2.00	2.00	2.00	2.00
Concrete unit weight (pcf)	150	150	150	150	150
Floor Uniform Dead Load (psf)	**100**	**288**	**288**	**288**	**288**
Floor Uniform Live Load (psf)	**2380**	**4694**	**5000**	**1542**	**1824**
Floor Beam Linear Dead Load (plf)	187.50	1787.50	1787.50	900.00	900.00
Analysis, ref. ACI 318-99, sections 8.7 (span length), 8.3 (methods of analysis), and 11.1.3.1					
Span (Ctr to Ctr of Supports) (ft)	7.5	10.5	7.75	10.5	10.5
Width of Supports (in)	24	28	28	24	24
Analyze Ctr-Ctr(0) or Clr Span(1)	1	1	1	1	1
Effective Span (ft)	5.5	8.16666667	5.41666667	8.5	8.5
Tributary width (ft)	1.00	5.75	5.75	7.50	7.50
Include beam wt? No(0)/Yes(1)	1	1	1	1	1
Uniform Dead Load (plf)	287.50	3443.50	3443.50	3060.00	3060.00
Uniform Live Load (plf)	2380.00	26990.50	28750.00	11565.00	13680.00
U = 1.4D + 1.7L (plf)	4449	50705	53696	23945	27540
V.u (lb), $1.15\omega_u l_n/2$	**14,068**	**238,101**	**167,240**	**117,029**	**134,602**
V.u (lb), $\omega_u l_n/2$	**12,233**	**207,044**	**145,426**	**101,764**	**117,045**
V.u (lb), $\omega_u l_n/2 - d\omega_u$	**7,785**	**-54,930**	**-132,002**	**13,968**	**16,065**
Choose V.u	12,233	207,044	167,240	117,029	117,045
M^+.u (lb.ft), $\omega_u l_n/8$	**16,821**	**422,716**	**196,932**	**216,249**	**248,721**
M^+.u (lb.ft), $\omega_u l_n/11$	**12,233**	**307,430**	**143,223**	**157,272**	**180,888**
M^+.u (lb.ft), $\omega_u l_n/14$	**9,612**	**241,552**	**112,532**	**123,571**	**142,126**
M^+.u (lb.ft), $\omega_u l_n/16$	**8,410**	**211,358**	**98,466**	**108,124**	**124,360**
Choose M^+.u	8,410	211,358	143,223	157,272	124,360
M^-.u (lb.ft), $\omega_u l_n/9$	**14,952**	**375,747**	**175,050**	**192,221**	**221,085**
M^-.u (lb.ft), $\omega_u l_n/10$	**13,457**	**338,173**	**157,545**	**172,999**	**198,977**
M^-.u (lb.ft), $\omega_u l_n/11$	**12,233**	**307,430**	**143,223**	**157,272**	**180,888**
M^-.u (lb.ft), $\omega_u l_n/12$	**11,214**	**281,810**	**131,288**	**144,166**	**165,814**
M^-.u (lb.ft), $\omega_u l_n/16$	**8,410**	**211,358**	**98,466**	**108,124**	**124,360**
M^-.u (lb.ft), $\omega_u l_n/24$	**5,607**	**140,905**	**65,644**	**72,083**	**82,907**
	0	**0**	**0**	**0**	**0**
Choose M^-.u	12,233	307,430	175,050	192,221	180,888

Strength Design	15" slab	71	72	73	74
Flexural Steel Bars (Bottom)	(1) #6				
Flexural Steel Area (in^2), **As**	0.44				
Shear Steel Bars	None				
Shear Steel Area (in^2), **Av**	0.00				
spacing of shear steel (in), **s**	999				
Flexural Steel Bars (Top)	(2) #6				
Flexural Steel Area (in^2), **A's**	0.88				
Concrete Strength (psi), f'c	2500				
Flexural Steel (psi), fy	40000				
Shear Steel (psi), fy	40000				
Depth of top comp. block (in), **a**	0.69				
ρ	0.00306				
ρ,min	0.00500				
Min. reinf. Check	more steel				
β_1	0.85				
ρ,max = 0.75*ρ,balanced	0.02320				
Max. reinf. Check	OK				
Depth of bottom comp. block (in), **a**	1.38				
ρ' (manual check min. & max.)	0.00611				
ϕ.b	0.9				
ϕ.v	0.85				
Bending Strength, M^+.d = ϕM^+.n (lb*ft)	**15,384**				
Check bending strength	OKAY				
Bending Strength, M^-.d = ϕM^-.n (lb*ft)	**29,858**				
Check bending strength	OKAY				
Shear Strength, V.d = ϕV.n (lb)	**12,240**				
Check shear strength	OKAY				
Deflection Design (Valid for simple spans only)					
f.r, modulus of rupture (psi)	375				
I.g, Gross moment of inertia (in^4)	3,375				
y.t, distance from N.A. to tension face	7.50				
M.cr, Cracking Moment (lb*ft)	14,063				
M.max, Service Moment	10,086				
E.s, Elastic Mod. Of Steel (psi)	29,000,000				
E.c, Elastic Mod. Of concrete (psi)	2,850,000				
n = E.s/E.c	10.2				
c = d[(nρ*(nρ+2))^1/2-nρ]	2.64				
I.cr, Cracked moment of inertia (in^4)	466				
I.e, Effective moment of intertia (in^4)	**3,375**				
Δ, immediate due to live load (in)	0.005				
Span / deflection	**12955**				
Check live deflection	OKAY				
Δ, long term from dead load (in)	0.000				
Δ, lg. term from sustained live ld. (in)	0.003				
Δ, instantaneous live load (in)	0.004				
Δ, after attachment of non-structural elements (in.) = Rows 95+96+97	0.007				
Span / deflection	**9451**				
Check live deflection	OKAY				

C.I.P. Concrete Beam or Slab Analysis - Determine max. superimposed (live) load allowed

Beam Label	**75**	**None**	**81**	**79**	**80**
Depth of Beam (in) **h**	**48**	**0**	**36**	**36**	**36**
Depth to Reinf. (in) **d**	**44**	**0**	**32**	**32**	**32**
Width of Beam (in) **b**	**18**	**0**	**66**	**66**	**66**
Slab Section or Beam Size	**18 x 48**	**0 x 0**	**66 x 36**	**66 x 36**	**66 x 36**
Design Criteria					
	360	360	360	360	360
Δ limit due to Long-Term Loads (L /)	480	480	480	480	480
applied after non-structural elements are attached					
% of live load that is long-term	**20%**	**20%**	**20%**	**20%**	**20%**
% of live load that is not long-term	80%	80%	80%	80%	80%
$\lambda = \xi/(1+50p')$, $\xi = 2.0$ for long-term	1.63	2.00	2.00	2.00	2.00
Concrete unit weight (pcf)	150	150	150	150	150
Floor Uniform Dead Load (psf)	**288**	**0**	**100**	**100**	**100**
Floor Uniform Live Load (psf)	**2440**	**0**	**5000**	**5000**	**5000**
Floor Beam Linear Dead Load (plf)	900.00	0.00	2475.00	2475.00	2475.00
Analysis, ref. ACI 318-99, sections 8.7 (span length), 8.3 (methods of analysis), and 11.1.3.1					
Span (Ctr to Ctr of Supports) (ft)	**7.75**	**0**	**10.5**	**5.25**	**10.5**
Width of Supports (in)	**24**	**0**	**28**	**28**	**28**
Analyze Ctr-Ctr(0) or Clr Span(1)	**1**	**0**	**1**	**1**	**1**
Effective Span (ft)	5.75	0	8.16666667	2.91666667	8.16666667
Tributary width (ft)	**7.50**	**0.00**	**4.00**	**4.00**	**4.00**
Include beam wt? No(0)/Yes(1)	**1**	**0**	**1**	**1**	**1**
Uniform Dead Load (plf)	3060.00	0.00	2875.00	2875.00	2875.00
Uniform Live Load (plf)	18300.00	0.00	20000.00	20000.00	20000.00
U = 1.4D + 1.7L (plf)	35394	0	38025	38025	38025
V.u (lb), $1.15\omega_u/_n/2$	**117,021**	**0**	**178,559**	**63,771**	**178,559**
V.u (lb), $\omega_u/_n/2$	**101,758**	**0**	**155,269**	**55,453**	**155,269**
V.u (lb), $\omega_u/_n/2 - d\omega_u$	**-28,020**	**0**	**53,869**	**-45,947**	**53,869**
Choose V.u	**117,021**	**0**	**178,559**	**63,771**	**155,269**
M^+.u (lb.ft), $\omega_u/_n/8$	**146,277**	**0**	**317,007**	**40,435**	**317,007**
M^+.u (lb.ft), $\omega_u/_n/11$	**106,383**	**0**	**230,551**	**29,407**	**230,551**
M^+.u (lb.ft), $\omega_u/_n/14$	**83,587**	**0**	**181,147**	**23,105**	**181,147**
M^+.u (lb.ft), $\omega_u/_n/16$	**73,138**	**0**	**158,504**	**20,217**	**158,504**
Choose M^+.u	**106,383**	**0**	**230,551**	**29,407**	**158,504**
M^-.u (lb.ft), $\omega_u/_n/9$	**130,024**	**0**	**281,784**	**35,942**	**281,784**
M^-.u (lb.ft), $\omega_u/_n/10$	**117,021**	**0**	**253,606**	**32,348**	**253,606**
M^-.u (lb.ft), $\omega_u/_n/11$	**106,383**	**0**	**230,551**	**29,407**	**230,551**
M^-.u (lb.ft), $\omega_u/_n/12$	**97,518**	**0**	**211,338**	**26,956**	**211,338**
M^-.u (lb.ft), $\omega_u/_n/16$	**73,138**	**0**	**158,504**	**20,217**	**158,504**
M^-.u (lb.ft), $\omega_u/_n/24$	**48,759**	**0**	**105,669**	**13,478**	**105,669**
	0	**0**	**0**	**0**	**0**
Choose M^-.u	**130,024**	**0**	**281,784**	**32,348**	**230,551**

Eclipse Engineering, Inc.
consulting engineers
235 N. First St. West, 2nd Floor
Missoula, MT 59802
Ph: (406) 721-5733
Fax: (406) 721-4988
www.eclipse-engineering.com

TAN BLDG 607A
FLOOR ANALYSIS - SUB-AREA 5
TROY 3/4/04

SUB-AREA (5) REF. D/S115

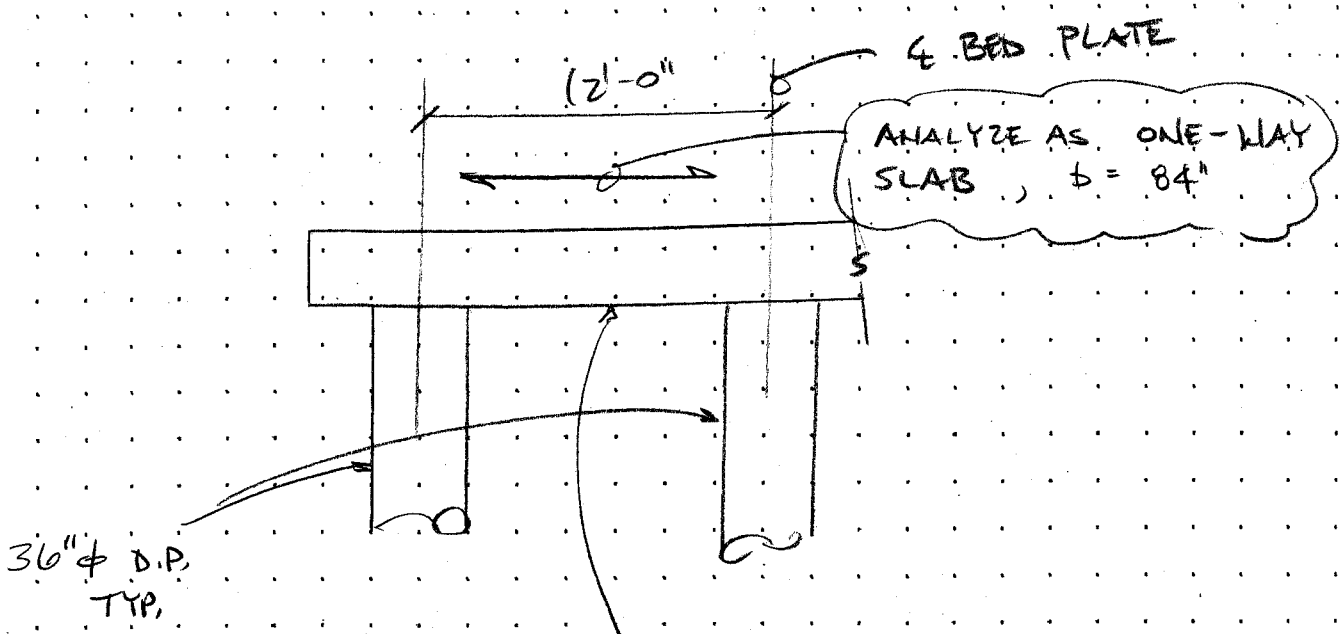

NOTE: IN A 7'-0" WIDE SECTION OF SLAB, THERE ARE AT LEAST (9) #8 TOP BARS AND (8) #8 BOTTOM BARS

24" DEEP SLAB
W/ #8 @ 9" o/c TOP BARS
#8 @ 10" o/c BOTTOM BARS
d to A_s = 20"
d to A'_s = 22"

ALSO CHECK PERPENDICULAR DIRECTION
#6 @ 6" o/c TOP, #6 @ 12" o/c BOTTOM

CAPACITY = 1490 PSF LIVE LOAD

C.I.P. Concrete Beam or Slab Analysis - Determine max. superimposed (live) load allowed

Beam Label	12-ft span 24" slab	7-span 24" slab	None	None	None
Depth of Beam (in) **h**	24	24	0	0	0
Depth to Reinf. (in) **d**	20	20	0	0	0
Width of Beam (in) **b**	84	12	0	0	0
Slab Section or Beam Size	**84 x 24**	**12 x 24**	**0 x 0**	**0 x 0**	**0 x 0**
Design Criteria					
	360	360	360	360	360
Δ limit due to Long-Term Loads (L /) applied after non-structural elements are attached	480	480	480	480	480
% of live load that is long-term	20%	20%	20%	20%	20%
% of live load that is not long-term	80%	80%	80%	80%	80%
$\lambda = \xi/(1+50p')$, $\xi = 2.0$ for long-term lo	1.65	1.69	2.00	2.00	2.00
Concrete unit weight (pcf)	150	150	150	150	150
Floor Uniform Dead Load (psf)	0	0	0	0	0
Floor Uniform Live Load (psf)	1490	2734	0	0	0
Floor Beam Linear Dead Load (plf)	2100.00	300.00	0.00	0.00	0.00
Analysis, ref. ACI 318-99, sections 8.7 (span length), 8.3 (methods of analysis), and 11.1.3.1					
Span (Ctr to Ctr of Supports) (ft)	12	7	0	0	0
Width of Supports (in)	36	36	0	0	0
Analyze Ctr-Ctr(0) or Clr Span(1)	0	0	0	0	0
Effective Span (ft)	12	7	0	0	0
Tributary width (ft)	7.00	1.00	0.00	0.00	0.00
Include beam wt? No(0)/Yes(1)	1	1	0	0	0
Uniform Dead Load (plf)	2100.00	300.00	0.00	0.00	0.00
Uniform Live Load (plf)	10430.00	2734.00	0.00	0.00	0.00
U = 1.4D + 1.7L (plf)	20671	5068	0	0	0
V.u (lb), $1.15\omega_u\ell_n/2$	**142,630**	**20,398**	0	0	0
V.u (lb), $\omega_u\ell_n/2$	**124,026**	**17,737**	0	0	0
V.u (lb), $\omega_u\ell_n/2 - d\omega_u$	**89,574**	**9,291**	0	0	0
Choose V.u	142,630	20,398	0	0	0
M^+.u (lb.ft), $\omega_u\ell_n^2/8$	**372,078**	**31,040**	0	0	0
M^+.u (lb.ft), $\omega_u\ell_n^2/11$	**270,602**	**22,575**	0	0	0
M^+.u (lb.ft), $\omega_u\ell_n^2/14$	**212,616**	**17,737**	0	0	0
M^+.u (lb.ft), $\omega_u\ell_n^2/16$	**186,039**	**15,520**	0	0	0
Choose M^+.u	270,602	22,575	0	0	0
M^-.u (lb.ft), $\omega_u\ell_n^2/9$	**330,736**	**27,591**	0	0	0
M^-.u (lb.ft), $\omega_u\ell_n^2/10$	**297,662**	**24,832**	0	0	0
M^-.u (lb.ft), $\omega_u\ell_n^2/11$	**270,602**	**22,575**	0	0	0
M^-.u (lb.ft), $\omega_u\ell_n^2/12$	**248,052**	**20,694**	0	0	0
M^-.u (lb.ft), $\omega_u\ell_n^2/16$	**186,039**	**15,520**	0	0	0
M^-.u (lb.ft), $\omega_u\ell_n^2/24$	**124,026**	**10,347**	0	0	0
	0	0	0	0	0
Choose M^-.u	330,736	27,591	0	0	0

Strength Design	24" slab	24" slab	None	None	None
Flexural Steel Bars (Bottom)	(8) #8	(1) #6			
Flexural Steel Area (in^2), **As**	6.32	0.44			
Shear Steel Bars	None	None			
Shear Steel Area (in^2), **Av**	0.00	0.00			
spacing of shear steel (in), **s**	999	999			
Flexural Steel Bars (Top)	(9) #8	(2) #6			
Flexural Steel Area (in^2), **A's**	7.11	0.88			
Concrete Strength (psi), f'c	2500	2500			
Flexural Steel (psi), fy	40000	40000			
Shear Steel (psi), fy	40000	40000			
Depth of top comp. block (in), **a**	1.42	0.69			
ρ	0.00376	0.00183			
ρ,min	0.00500	0.00500			
Min. reinf. Check	more steel	more steel			
β_1	0.85	0.85			
ρ,max = 0.75*ρ,balanced	0.02320	0.02320			
Max. reinf. Check	OK	OK			
Depth of bottom comp. block (in), **a**	1.59	1.38			
ρ' (manual check min. & max.)	0.00423	0.00367			
ϕ.b	0.9	0.9			
ϕ.v	0.85	0.85			
Bending Strength, M^+.d = ϕM^+.n (lb*ft)	**365,774**	**25,944**			
Check bending strength	OKAY	OKAY			
Bending Strength, M^-.d = ϕM^-.n (lb*ft)	**409,608**	**50,978**			
Check bending strength	OKAY	OKAY			
Shear Strength, V.d = ϕV.n (lb)	**142,800**	**20,400**			
Check shear strength	OKAY	OKAY			
Deflection Design (Valid for simple spans only)					
f.r, modulus of rupture (psi)	375	375			
I.g, Gross moment of inertia (in^4)	96,768	13,824			
y.t, distance from N.A. to tension face	12.00	12.00			
M.cr, Cracking Moment (lb*ft)	252,000	36,000			
M.max, Service Moment	225,540	18,583			
E.s, Elastic Mod. Of Steel (psi)	29,000,000	29,000,000			
E.c, Elastic Mod. Of concrete (psi)	2,850,000	2,850,000			
n = E.s/E.c	10.2	10.2			
c = d[(nρ*(nρ+2))^1/2-nρ]	4.82	3.51			
I.cr, Cracked moment of inertia (in^4)	17,954	1,390			
I.e, Effective moment of intertia (in^4)	**96,768**	**13,824**			
Δ, immediate due to live load (in)	0.018	0.004			
Span / deflection	**8161**	**22407**			
Check live deflection	OKAY	OKAY			
Δ, long term from dead load (in)	0.000	0.000			
Δ, lg. term from sustained live ld. (in)	0.009	0.002			
Δ, instantaneous live load (in)	0.014	0.003			
Δ, after attachment of non-structural elements (in.) = Rows 95+96+97	0.023	0.005			
Span / deflection	**6135**	**16746**			
Check live deflection	OKAY	OKAY			

Eclipse Engineering, Inc.
consulting engineers
235 N. First St. West, 2nd Floor
Missoula, MT 59802
Ph: (406) 721-5733
Fax: (406) 721-4988
www.eclipse-engineering.com

TAN BLDG 607A
FLOOR ANALYSIS - SUB-AREA 7
TROY 3/4/04

SUB-AREA (7)

REF. (E / S115)

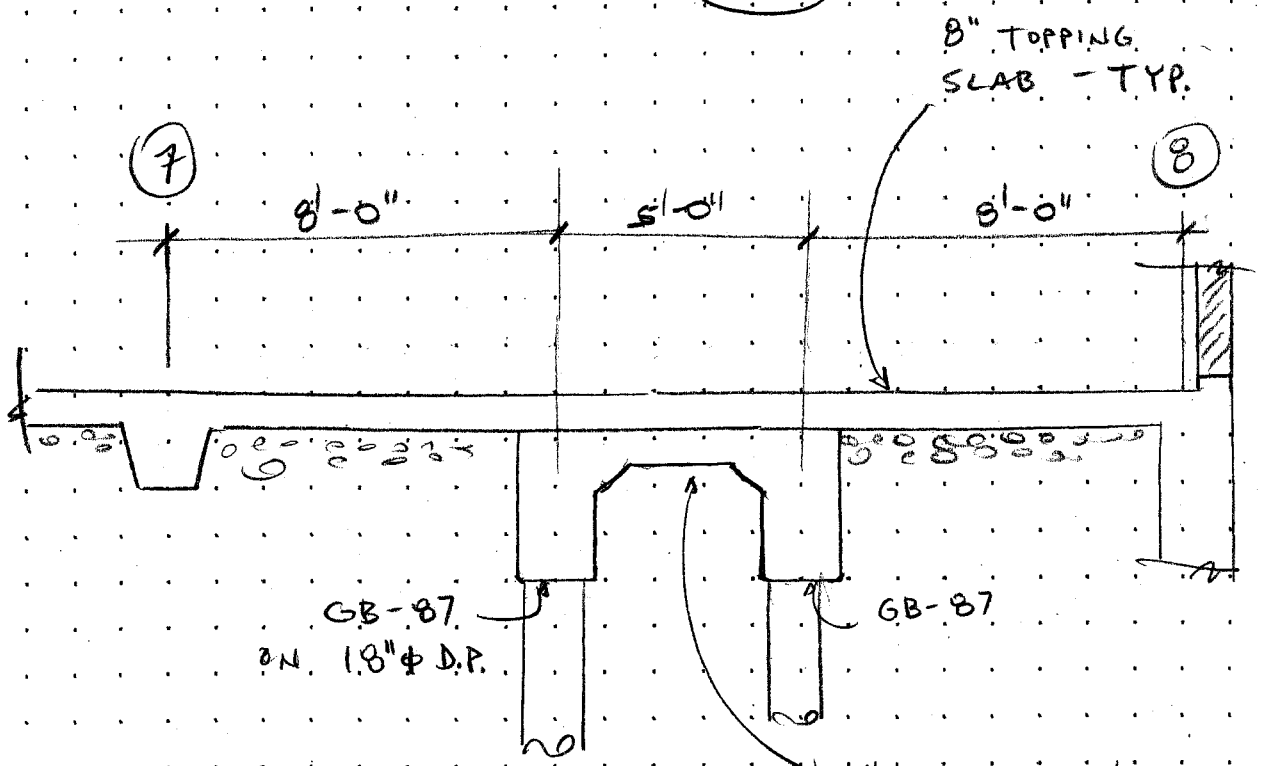

10" CONC. SLAB W/ #6 @ 10" o.c. THAT IS 15" DEEP AT THE GRADE BEAMS

d to A_s = 7"
d to A'_s = 13"

* CAPACITY = 500 PSF (SIM. TO SUB-AREA (1)) LIVE LOAD

* EXCEPT AT THE TRACKS WHERE AN 1895 PSF SUPERIMPOSED LIVE LOAD IS ALLOWED

C.I.P. Concrete Beam or Slab Analysis - Determine max. superimposed (live) load allowed

Beam Label	Typical 15" slab	86	87	None	None
Depth of Beam (in) **h**	10	35	35	0	0
Depth to Reinf. (in) **d**	7	31	31	0	0
Width of Beam (in) **b**	10	20	20	0	0
Slab Section or Beam Size	**10 x 10**	**20 x 35**	**20 x 35**	**0 x 0**	**0 x 0**
Design Criteria					
	360	360	360	360	360
Δ limit due to Long-Term Loads (L /)	480	480	480	480	480
applied after non-structural elements are attached					
% of live load that is long-term	20%	20%	20%	20%	20%
% of live load that is not long-term	80%	80%	80%	80%	80%
$\lambda = \xi/(1+50p')$, $\xi = 2.0$ for long-term lo	1.52	2.00	2.00	2.00	2.00
Concrete unit weight (pcf)	150	150	150	150	150
Floor Uniform Dead Load (psf)	100	288	288	0	0
Floor Uniform Live Load (psf)	2335	1990	1895	0	0
Floor Beam Linear Dead Load (plf)	104.17	729.17	729.17	0.00	0.00
Analysis, ref. ACI 318-99, sections 8.7 (span length), 8.3 (methods of analysis), and 11.1.3.1					
Span (Ctr to Ctr of Supports) (ft)	5	10.33	9.5	0	0
Width of Supports (in)	20	18	18	0	0
Analyze Ctr-Ctr(0) or Clr Span(1)	1	1	1	0	0
Effective Span (ft)	3.33333333	8.83	8	0	0
Tributary width (ft)	0.83	5.00	5.00	0.00	0.00
Include beam wt? No(0)/Yes(1)	1	1	1	0	0
Uniform Dead Load (plf)	187.47	2169.17	2169.17	0.00	0.00
Uniform Live Load (plf)	1945.06	9950.00	9475.00	0.00	0.00
U = 1.4D + 1.7L (plf)	3569	19952	19144	0	0
V.u (lb), $1.15\omega_u\ell_n/2$	**6,841**	**101,300**	**88,064**	**0**	**0**
V.u (lb), $\omega_u\ell_n/2$	**5,948**	**88,087**	**76,577**	**0**	**0**
V.u (lb), $\omega_u\ell_n/2 - d\omega_u$	**3,866**	**36,545**	**27,121**	**0**	**0**
Choose V.u	5,948	88,087	88,064	0	0
M^+.u (lb.ft), $\omega_u\ell_n/8$	**4,957**	**194,453**	**153,155**	**0**	**0**
M^+.u (lb.ft), $\omega_u\ell_n/11$	**3,605**	**141,420**	**111,385**	**0**	**0**
M^+.u (lb.ft), $\omega_u\ell_n/14$	**2,833**	**111,116**	**87,517**	**0**	**0**
M^+.u (lb.ft), $\omega_u\ell_n/16$	**2,479**	**97,226**	**76,577**	**0**	**0**
Choose M^+.u	2,479	97,226	111,385	0	0
M^-.u (lb.ft), $\omega_u\ell_n/9$	**4,406**	**172,847**	**136,137**	**0**	**0**
M^-.u (lb.ft), $\omega_u\ell_n/10$	**3,966**	**155,562**	**122,524**	**0**	**0**
M^-.u (lb.ft), $\omega_u\ell_n/11$	**3,605**	**141,420**	**111,385**	**0**	**0**
M^-.u (lb.ft), $\omega_u\ell_n/12$	**3,305**	**129,635**	**102,103**	**0**	**0**
M^-.u (lb.ft), $\omega_u\ell_n/16$	**2,479**	**97,226**	**76,577**	**0**	**0**
M^-.u (lb.ft), $\omega_u\ell_n/24$	**1,652**	**64,818**	**51,052**	**0**	**0**
	0	**0**	**0**	**0**	**0**
Choose M^-.u	3,605	141,420	136,137	0	0

Strength Design	15" slab	86	87	None	None
Flexural Steel Bars (Bottom)	(1) #6				
Flexural Steel Area (in^2), **As**	0.44				
Shear Steel Bars	None				
Shear Steel Area (in^2), **Av**	0.00				
spacing of shear steel (in), **s**	999				
Flexural Steel Bars (Top)	(1) #6				
Flexural Steel Area (in^2), **A's**	0.44				
Concrete Strength (psi), f'c	2500				
Flexural Steel (psi), fy	40000				
Shear Steel (psi), fy	40000				
Depth of top comp. block (in), **a**	0.83				
ρ	0.00629				
ρ,min	0.00500				
Min. reinf. Check	OK				
β_1	0.85				
ρ,max = 0.75*ρ,balanced	0.02320				
Max. reinf. Check	OK				
Depth of bottom comp. block (in), **a**	0.83				
ρ' (manual check min. & max.)	0.00629				
ϕ.b	0.9				
ϕ.v	0.85				
Bending Strength, M^+.d = ϕM^+.n (lb*ft)	**8,693**				
Check bending strength	OKAY				
Bending Strength, M^-.d = ϕM^-.n (lb*ft)	**8,693**				
Check bending strength	OKAY				
Shear Strength, V.d = ϕV.n (lb)	**5,950**				
Check shear strength	OKAY				
Deflection Design (Valid for simple spans only)					
f.r, modulus of rupture (psi)	375				
I.g, Gross moment of inertia (in^4)	833				
y.t, distance from N.A. to tension face	5.00				
M.cr, Cracking Moment (lb*ft)	5,208				
M.max, Service Moment	2,962				
E.s, Elastic Mod. Of Steel (psi)	29,000,000				
E.c, Elastic Mod. Of concrete (psi)	2,850,000				
n = E.s/E.c	10.2				
c = d[(nρ*(nρ+2))^1/2-nρ]	2.10				
I.cr, Cracked moment of inertia (in^4)	138				
I.e, Effective moment of intertia (in^4)	**833**				
Δ, immediate due to live load (in)	0.002				
Span / deflection	**17583**				
Check live deflection	OKAY				
Δ, long term from dead load (in)	0.000				
Δ, lg. term from sustained live ld. (in)	0.001				
Δ, instantaneous live load (in)	0.002				
Δ, after attachment of non-structural elements (in.) = Rows 95+96+97	0.003				
Span / deflection	**12839**				
Check live deflection	OKAY				

Eclipse Engineering, Inc.
consulting engineers
235 North 1st St. West, 2nd Floor
Missoula, Montana 59802
Phone: (406) 721-5733
Fax: (406) 721-4988
www.eclipse-engineering.com

Clarification Item #1

Date: June 8, 2004

Project: Idaho National Labs
TAN Bldg. 607A
Transporter & Tank Support
Idaho Falls, Idaho

To: Jeff Towers
Portage Environmental
1075 South Utah St., Ste 200
Idaho Falls, ID 83402

From: Troy Leistiko, P.E.

Re: Wood Confinement Plate

Reference our previous letter dated April 30th, 2004.

Item 1: In order to provide a bolted connection embedded less than 2-inches into the existing concrete floor, the wood confinement plates shall be fastened to the concrete floor with 3/8-inch diameter 'Hilti' Kwik Bolts as described on the attached DETAIL A and DETAIL B.

END OF CLARIFICATION ITEM #1

Attachments: DETAIL A, DETAIL B

PROFESSIONAL ENGINEER REGISTERED 9081 6/8/04 STATE OF IDAHO TROY LEISTIKO

Eclipse Engineering, Inc.
consulting engineers
STRUCTURAL SOLUTIONS FOR THE NEXT GENERATION
235 N. First St. West
Missoula, MT 59802
Ph: (406) 721-5733
www.eeimt.com

TAN BLDG. 607A
TRANSPORTER + TANK SUPPORT
CLARIFICATION ITEM #1

1/2

DATE: 6/8/04

DESIGN BY: TROY

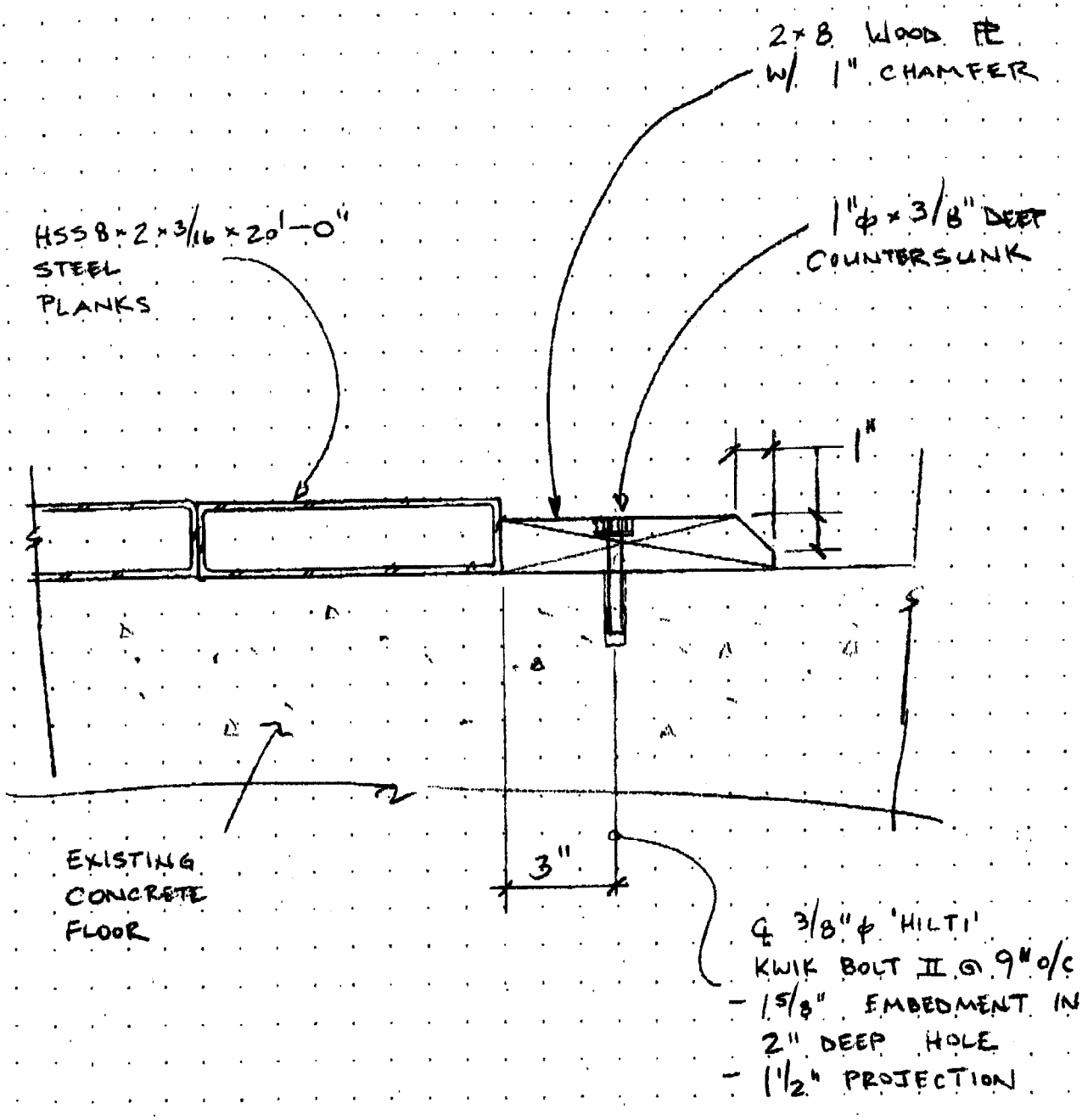

A — WOOD CONFINEMENT PLATE

SCALE: 3" = 1'-0"

Eclipse Engineering, Inc.
consulting engineers
238 N. First St. West
Missoula, MT 59802
Ph: (406) 721-6733
www.eeimt.com

TAN BLDG. 607A
TRANSPORTER + TANK SUPPORT
CLARIFICATION ITEM #1

2/2

DATE: 6/8/04

DESIGN BY: TROY

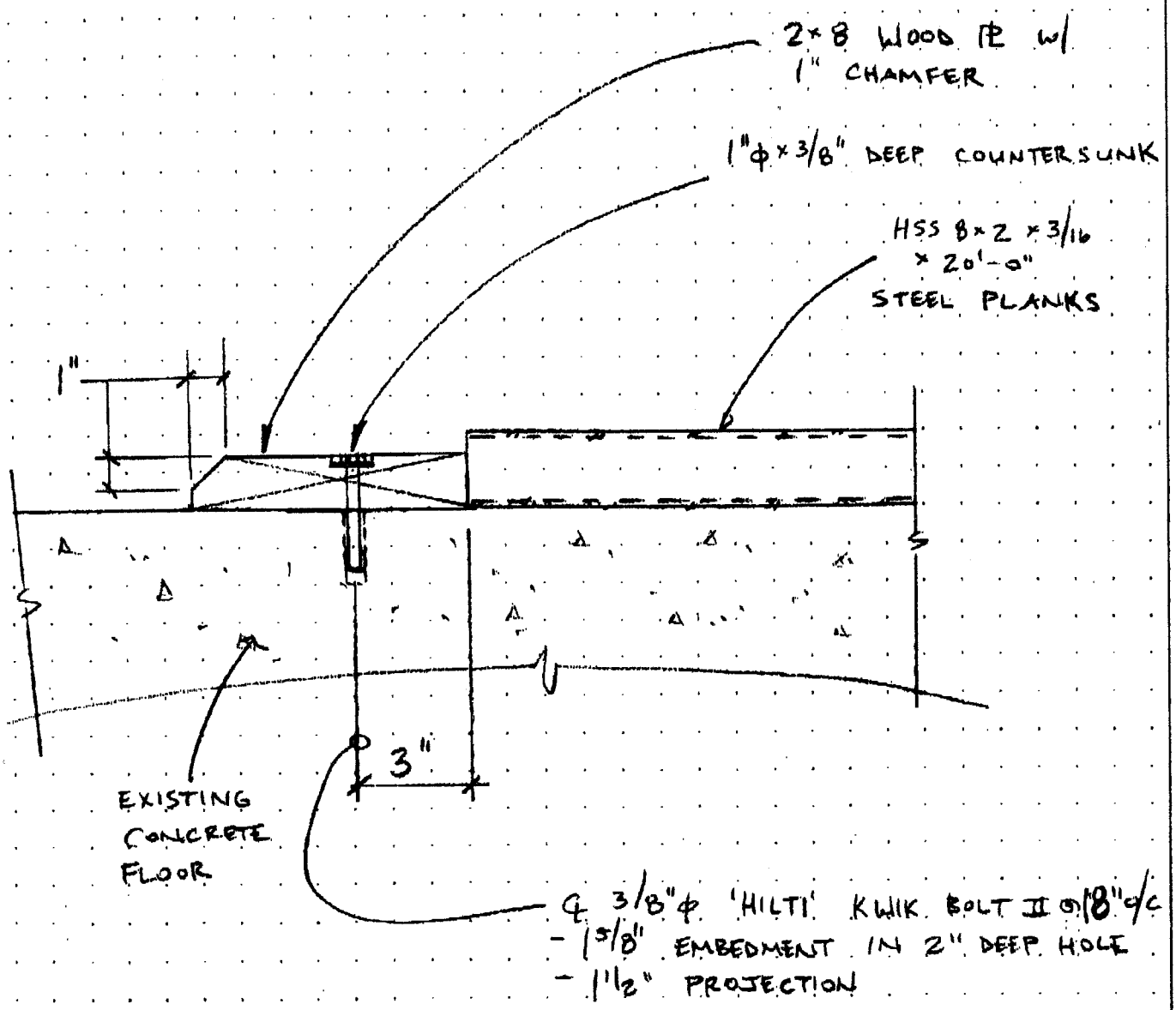

B WOOD CONFINEMENT PLATE
SCALE: 3" = 1'-0"

Attachment 2

Drawing No. P-FFA/CO-PM2A-003

REVISIONS		
REV	DESCRIPTION	EFFECTIVE DATE

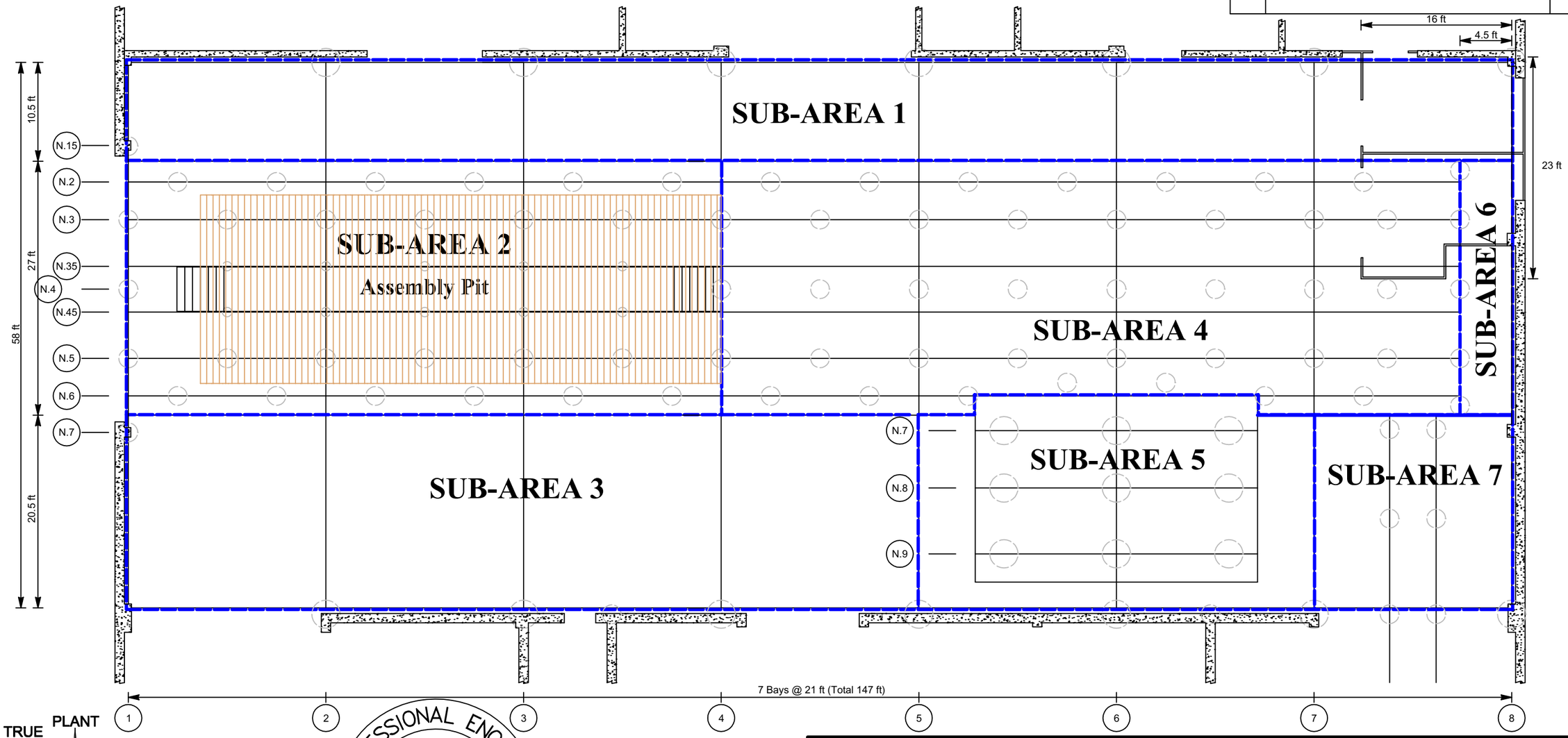

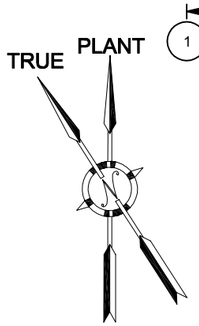

PROFESSIONAL ENGINEER
REGISTERED
10393
STATE OF IDAHO
BRADY J. ORCHARD

REVISION: 0

ORIGINAL SIGNED BY: Brady J. Orchard, PE

SEAL NUMBER: 10393

DATE ORIGINAL SIGNED: 05/12/04

ORIGINAL STORED AT: Portage Environmental, Inc.; Idaho Falls, ID

14' 0 14' 28' 42' 70'

LEGEND

BUILDINGS AND STRUCTURES
SUB-AREA BOUNDARY
DRILLED PIERS

FLOOR LOADING CAPACITIES

SUB-AREA 1: 500 POUNDS PER SQUARE FOOT.
SUB-AREA 2: 2615 POUNDS PER SQUARE FOOT, EXCEPT THE ASSEMBLY PIT WHICH IS LIMITED TO 285 POUNDS PER SQUARE FOOT.
SUB-AREA 3: 500 POUNDS PER SQUARE FOOT.
SUB-AREA 4: 1542 POUNDS PER SQUARE FOOT.
SUB-AREA 5: 1490 POUNDS PER SQUARE FOOT.
SUB-AREA 6: 500 POUNDS PER SQUARE FOOT.
SUB-AREA 7: 500 POUNDS PER SQUARE FOOT, EXCEPT THE 6'2" WIDE STRIP THAT SUPPORTS THE RAILROAD TRACKS WHICH CAN SUPPORT UP TO 1895 POUNDS PER SQUARE FOOT (ECLIPSE 2004).

NOTE: FLOOR LOADING CAPACITIES BASED ON EVALUATION OF ORIGINAL CONSTRUCTION DRAWINGS. FLOOR LOADING DOES NOT ACCOUNT FOR ANY SUBSEQUENT MODIFICATIONS.

Portage ENVIRONMENTAL

IDAHO OPERATIONS OFFICE
P.O. BOX 3726
IDAHO FALLS, ID 83403
PHONE: 208.528.6608
FAX: 208.523.8860

IDAHO NATIONAL ENGINEERING AND ENVIRONMENTAL LABORATORY
TEST AREA NORTH/TECHNICAL SUPPORT FACILITY
PM-2A REMEDIATION PROJECT
HIGH BAY ASSEMBLY SHOP CONCRETE FLOOR LOADING CAPACITY

SHEET:	1 OF 1		SCALE:	SHOWN	
DESIGN:	ECLIPSE	03/11/04	QA LEVEL: Q	DWG SIZE: B	
DRAWN:	M.P. LUNDELL	04/27/04	CONTRACT NO. 2073.00		
CHECKED:	J. TOWERS	05/12/04	DRAWING NUMBER: P-FFA/CO-PM2A-003		REV 0
APPROVED:	B.J. ORCHARD	05/12/04			

Document ID:PEI-EDF-1008
Revision ID:0
Effective Date:06/20/04

Engineering Design File

Transportation of the PM-2A Tanks from the TSF-26 Site to the TAN-607A High Bay

Portage Project No.: 2703.00
Project Title: PM-2A Remediation Phase I

Portage ENVIRONMENTAL

TEM-0104
03/30/2004
Rev. 0

ENGINEERING DESIGN FILE

1. Portage Project No.: 2703.00 2. Project/Task: PM-2A Remediation Phase 1

3. Subtask: Tank Excavation, Transport, and Storage

4. Title: Transport of the PM-2A Tanks from the TSF-26 Site to the TAN-607A High Bay

5. Summary:

This engineering design file evaluates the impact of loads imposed during the transportation of the PM-2A tanks to the Test Area North-607A High Bay may have on underground utilities within the transport path. This engineering design file also identifies overhead power and communication lines in the transport path that require rerouting or lifting and fill/grading requirements for the transport path.

6. Distribution: (Portage Environmental, Inc.)

Lisa Aldrich, PEI Document Control (Original)
Brady J. Orchard, P.E.
Clement B. Potelunas, P.E.
Ray Schwaller, P.E.
Jeff A. Towers

7. Review (R) and Approval (A) Signatures:
(Identify minimum reviews and approvals. Additional reviews/approvals may be added.)

	R/A	Printed Name/ Organization	Signature	Date
Author	A	Clement B. Potelunas, P.E.	Clement B Potelunas	6/20/04
Independent Review	R	Jeff A. Towers	J A Towers	6-20-04
Project Manager	R/A	Brady J. Orchard, P.E.		06/20/04

PROFESSIONAL ENGINEER
REGISTERED
10393
STATE OF IDAHO
BRADY J. ORCHARD

CONTENTS

1. INTRODUCTION AND PURPOSE 3

2. UNDERGROUND UTILITIES 3

2.1 Imposed Load 4

2.2 Breaking Strength of the 10-in. Sewer Pipe 4

2.3 Load Analysis 4

2.3.1 Live Load 5

2.3.2 Maximum Actual Load 5

2.4 Evaluation of Other Piping 5

3. OVERHEAD COMMUNICATION AND ELECTRICAL LINES 5

4. TRANSPORT PATH FILL and GRADE REQUIREMENTS 6

5. CONCLUSIONS AND RECOMMENDATIONS 6

6. REFERENCES 6

7. DRAWINGS 7

Attachment 1—Design Calculations and Reference Tables 8

TABLES

1. Summary of the buried piping between TSF-26 site and TAN-607A High Bay 3

1. INTRODUCTION AND PURPOSE

The purpose of this engineering design file (EDF) is to evaluate the impact of loads imposed on underground utilities located beneath the transport path for the PM-2A tanks from the Technical Support Facility (TSF)-26 site to the Test Area North (TAN)-607A High Bay and to determine the need for modification of the transport path.

This EDF also addresses necessary relocation of overhead communication and electrical lines and transport path preparation activities (i.e., fill and grade) necessary for transport of the PM-2A tanks from the TSF-26 site to the TAN-607A High Bay.

2. UNDERGROUND UTILITIES

A variety of underground piping is located beneath the proposed transport path. Table 1 provides a summary of the buried piping between the TSF-26 site and the TAN-607A High Bay. This piping was evaluated to determine whether the load imposed during transport of the PM-2A tanks would detrimentally impact the buried piping.

Table 1. Summary of the buried piping between the TSF-26 site and the TAN-607A High Bay.

Pipe Number	Description/Type[a]	Size	Material of Construction	Depth Below Grade at Crossing	Status
10″ SSD-10001	Sanitary sewer from TSF area to TAN-711	10 in.	Concrete	8.21 ft	In service
Unidentified line (see Drawing 423185, Sheet 3 of 6)	Fire water west of Firehole Road	8 in.	Steel	Approx. 5 ft	Abandoned
10″ SWD-10035	Service waste to TAN injection well	10 in.	Concrete	5 ft	Not in service
Unidentified line (see Drawing 423185, Sheet 3 of 6)	Fire water main west of Firehole Road	4 in.	Steel	Approx. 5 ft	In service
Unidentified line (see Drawing 217515)	Water line east of Firehole Road	4 in. (assumed)	Steel	Approx. 5 ft	In service
Unidentified line (see Drawing 217515)	Water line from TAN-609	4 in. (assumed)	Steel	Approx. 5 ft	Abandoned
Unidentified line (see Drawing 423185, Sheet 3 of 6)	Fire water line from TAN-609	4 in. (assumed)	Steel	Approx. 5 ft	Abandoned
Unidentified line (see Drawing 423185, Sheet 3 of 6)	Fire water main	4 in. (assumed)	Steel	Approx. 5 ft	In service
8″ SSD-10009	Sanitary sewer from TAN-609	8 in.	Concrete	Approx. 7 ft	Abandoned

Table 1. (continued).

Pipe Number	Description/Type[a]	Size	Material of Construction	Depth Below Grade at Crossing	Status
8″ SSD-10002	Sanitary sewer MH#1 to MH#2	8 in.	Concrete	Approx. 10 ft	In service
8″ SWD-10036	Service waste from TAN-607	8 in.	Concrete	Approx. 5 ft	Abandoned
8″ SWD-10038	Service waste from TAN-609	8 in.	Concrete	Approx. 5 ft	Abandoned
Unidentified line (see Drawing 217515)	Water across Snake Avenue	8 in.	Steel	Approx. 5 ft	In service
Unidentified line (see Drawing 217515)	Water west of TAN-607	8 in.	Steel encased in concrete under tracks	Approx. 5 ft	In service
10″ SSD-10001	Sanitary sewer	10 in.	Concrete encased in concrete under tracks	Approx. 9 ft	In service

a. *Buried Waste Line Register for NRTS* (Paige 1972).

Based on a review of the piping, the two concrete sanitary sewer lines were determined to have the highest potential for damage resulting from transport of the PM-2A tanks. The 10-in. line is approximately 8 ft below the ramp from the TSF-26 site. The 8-in. line is approximately 10 ft below Snake Avenue.

2.1 Imposed Load

The weight of the transporter, tank, and saddle supports is estimated to be 237,000 lb. The wheel load is estimated to be 4,032 lb/ft^2 (Duratek Drawing C-067-RP0003-003).

2.2 Breaking Strength of the 10-in. Sewer Pipe

Available records indicate that the sanitary sewer line is 10-in. concrete pipe (R. M. Parsons Drawing 1229-5-ANP/GE-3-607-U106). No additional design data have been identified for the sanitary sewer line. Therefore, it is assumed that line is bedded properly and the crushing strength is equal to 2,000 lb/lf. (*Design Data 25*; see Attachment 1 [ACPA 1974])

2.3 Load Analysis

The vertical external load on the 10-in. sanitary sewer line is calculated with the following assumptions:

- The soil are relatively dry soils conservatively estimated to weigh, W = 120 lb/ft^3
- The height of the soil above the top of the pipe, H, is 8.21 ft.

2.3.1 Live Load

- Impact factor (1.75, most conservative value)
- Percent of wheel load on pipe (from table on Page 40 of Clay Pipe Engineering Manual; see Attachment 1 [NCPI 1968]) = 0.60%
- From table on Page 101 of the Concrete Pipe Design Manual (see Attachment 1 [ACPA 1970]), a 10-in. pipe, the weight of the soil at 120 lb/ ft^3, and a 8-ft depth the maximum worst-case load = 1,193 lb
- The wheel load transmitted to the pipe x impact factor x wheel load
- (0.006 x 1.75) (4,032 lb) ≅ 42 lb.

2.3.2 Maximum Actual Load

- 1193 lb + 42 lb = 1,235 lb, which is less than 2,000-lb crushing strength. Therefore, no reinforcing is necessary.

Using appropriate values for the 8-in. line, the maximum load is calculated at 1,248 lb, which is less than the 2,000 lb required to crush the pipe (see Attachment 1).

2.4 Evaluation of Other Piping

The steel water lines and fire water lines have allowable working pressures that are in excess of the crushing strength of the 10-in. or 8-in. sanitary sewer lines. The maximum working pressures for these pipes (assumed to be Schedule 40 wrought steel pipe) are 1,400 psi for the 4-in. pipe and 1,100 psi for the 8-in. line, respectively. Because of the working pressure of these lines, no additional evaluation is necessary.

3. OVERHEAD COMMUNICATION AND ELECTRICAL LINES

The height of the transporter and tank is approximately 21.5 ft. The following list summarizes the overhead line heights and required actions.

- Immediately east of the TSF-26 site, power and communication lines cross the path of the transporter at heights of 33.1 ft and 20.8 ft, respectively. The communication line should be raised or removed.
- Two communication lines run south from power pole #54-8 across the transporter path at heights of 19.7 ft and 18.6 ft. Both of these lines will need to be raised or removed.

- A set of power and communication lines run parallel to Snake Avenue. The transport path crosses beneath these lines between power pole #54-8 and #54-7. The power lines are at a height of 40.5 ft and communication lines are located at 20.5 ft, 21.1 ft, 21.7 ft, and 24.5 ft. The three communication lines should be raised or removed.

4. TRANSPORT PATH FILL AND GRADE REQUIREMENTS

Based on site visits conducted by Portage Environmental, Inc., and its sub-tier contractors, only one area of the proposed transport path requires additional fill and grading to support transport of the PM-2A tanks beyond that already specified as part of tank excavation and site preparation activities associated with the TSF-26 site. The area directly west of the TAN-607A High Bay entrance and the access road requires fill and grading to support the turn radius of the transporter to allow the load to be backed into the TAN-607A High Bay.

An area 20 ft in width and 90 ft in length from the edge of the existing asphalt top will need to be filled, graded, and compacted along the railroad tracks. Fill materials shall be placed in loose lifts not exceeding 6 in. in thickness, uniformly moisture-conditioned, and compacted to a minimum of 90% of maximum dry density per ASTM D-698, within 2% of optimum moisture content. The top of the finished grade (ground surface) will be flat and level with the tops of the rails.

5. CONCLUSIONS AND RECOMMENDATIONS

Based on review of the buried piping beneath the transport path, no additional site preparation actions are necessary for the transport of the tanks.

Six overhead communication lines need to be removed or raised to provide adequate entrance during transport of the tanks.

Grade and fill activities are required west of the TAN-607A High Bay.

6. REFERENCES

ACPA, 1970, *Concrete Pipe Design Manual*, American Concrete Pipe Association, 1970.

ACPA, 1974, "Three-Edge Bearing Strengths Nonreinforced Concrete Pipe and Clay Pipe," *Design Data 25*, American Concrete Pipe Association, July 1974.

NCPI, 1968, *Clay Pipe Engineering Manual*, National Clay Pipe Institute, 1968.

Paige, B. E., 1972, *Buried Waste Line Register for NRTS, Part II TAN*, Allied Chemical Corporation, ACI-108, January 1972.

7. DRAWINGS

C-067-RP0003-003, Duratek Drawing, *INEEL PM-2A Tank Site Transportation and Hardware*, Revision 2, May 12, 2004.

1229-5 ANP/GE-3-607-U106, The Ralph M. Parsons Company Drawing, *ANP Assembly & Maintenance Area Expansion of Assembly & Maintenance Bldg. 607 Civil Water-Engine Fuel-Steam-Sanitary Sewer Plans and Profiles*, Revision B, August 3, 1956.

1230 TAN/TSF 305-1, *TAN Area Waste Line Identification*, November 16, 1971.

217515, *Water Line A&M Area*, April 1, 1957.

423185, Revision 9, Sheet 3 of 6.

Attachment 1

Design Calculations and Reference Tables

8320 old courthouse road • vienna, virginia 22180
© july 1974

design data 25

american concrete pipe association

THREE-EDGE BEARING STRENGTHS NONREINFORCED CONCRETE PIPE AND CLAY PIPE

Pipe strength classifications established by manufacturing and material standards for nonreinforced concrete pipe and clay pipe are based on three-edge bearing test strengths expressed in pounds per linear foot. These test strengths are directly related to the load carrying capacity of the buried pipe. Although the methods of presenting the strength classes of these two pipe materials are similar, nonreinforced concrete pipe strength classes provide the designer with additional latitude in selecting pipe strengths to satisfy a broader range of performance requirements.

STRENGTH COMPARISONS

The American Society for Testing and Materials (ASTM) Specification C14, Concrete Sewer, Storm Drain and Culvert Pipe, covers the three strength classes of nonreinforced concrete pipe. ASTM Specification C700, Extra Strength and Standard Strength Clay Pipe and Perforated Clay Pipe, covers two strength classifications of clay pipe. Table I presents a comparison of the specified minimum three-edge bearing strengths of the three classes of nonreinforced concrete pipe versus the standard strength class and extra strength class of clay pipe through 24 inch diameter. Class 1 minimum three-edge bearing strengths for nonreinforced concrete pipe exceed or meet the minimum three-edge bearing strengths of standard strength clay pipe in each size. Class 3 minimum three-edge bearing strengths for nonreinforced concrete pipe exceed or meet the minimum three-edge bearing strengths of extra strength clay pipe in each size. Class 2 nonreinforced concrete pipe provides the designer with intermediate strengths and the option to select a strength meeting load requirements more realistically and economically. Figure 1 presents these comparisons in graphic form and enables the designer to readily determine the inherent structural advantages of nonreinforced concrete pipe.

TESTING PROCEDURE

The complete procedure of testing concrete pipe and clay pipe are contained in ASTM Standard C497, Methods of Testing Concrete Pipe and Tile, and ASTM Standard C301, Methods of Testing Clay Pipe. The external load crushing strength test with the load applied by three-edge bearing is the accepted test method for both clay and concrete pipe. The test procedures are similar, except when wooden bearing strips are used for clay pipe plaster of paris must be cast on the contact edges since the barrel of the pipe is often irregular. This same procedure may be employed in the testing of concrete pipe if it is mutually agreed upon by the manufacturer and purchaser prior to testing.

SELECTION OF PIPE STRENGTH

The required three-edge bearing strengths for concrete pipe and clay pipe are computed by the equation:

$$\text{T.E.B.} = \frac{W_L + W_E}{L_f} \times \text{F.S.} \qquad (1)$$

where:

T.E.B. = three-edge bearing strength, pounds per linear foot
W_L = live load, pounds per linear foot
W_E = earth load, pounds per linear foot
L_f = load factor
F.S. = factor of safety

TABLE I: Three-Edge Bearing Strengths — Nonreinforced Concrete, Classes 1, 2, and 3, Clay, Standard Strength and Extra Strength

Diameter	Nonreinforced Concrete			Clay		Diameter
	Class 1	Class 2	Class 3	Standard Strength	Extra Strength	
4	1500	2000	2400	1200	2000	4
6	1500	2000	2400	1200	2000	6
8	1500	2000	2400	1400	2200	8
10	1600	2000	2400	1600	2400	10
12	1800	2250	2600	1800	2600	12
15	2000	2600	2900	2000	2900	15
18	2200	3000	3300	2200	3300	18
21	2400	3300	3850	2400	3850	21
24	2600	3600	4400	2600	4400	24

FIGURE 1: Strength Comparison
Nonreinforced Concrete Pipe and Clay Pipe

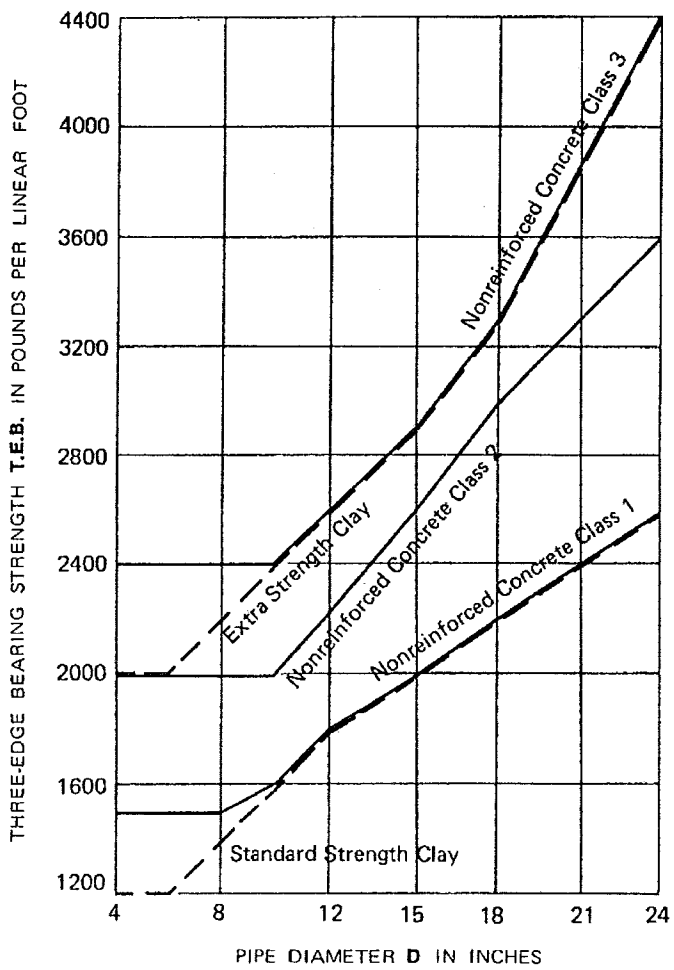

EXAMPLE 1

Given: A 24-inch diameter sanitary sewer line is to be installed on a Class B bedding with a load factor (L_f) of 1.9, in a trench 17 feet deep, with a factor of safety of 1.5. Live load is negligible. Earth load is 4372 pounds per linear foot.

Find: The required strength class of nonreinforced concrete pipe and clay pipe to carry the field loads.

Solution: Determine the required three-edge bearing test strength from equation (1)..

$$\text{T.E.B.} = \left(\frac{W_L}{1.5^*} + \frac{W_E}{L_f}\right) \text{F.S.}$$

$$= \frac{4372}{1.9} \times 1.5$$

$$= 3452 \text{ pounds per linear foot}$$

Using Table I, locate 24-inch diameter in appropriate column. Proceeding to the right determine most economical class of nonreinforced concrete pipe that exceeds the 3452 T.E.B. strength required. Follow same procedure to determine required class of clay pipe.

Answer: A Class 2 nonreinforced concrete pipe or an extra strength clay pipe is required.

The required strength class could also have been obtained from Figure 1.

EXAMPLE 2

Given: A 12-inch sanitary sewer line is to be installed in a 2½-foot wide trench with 13 feet of cover over the top of the pipe. The pipe will be backfilled with ordinary clay weighing 120 pounds per cubic foot. A Class C bedding is specified and a factor of safety of 1.5 will be used. Live load is negligible and earth load is 2137 pounds per linear foot.

Find: The required strength class of nonreinforced concrete pipe and clay pipe to carry the field loads.

Solution: Determine the required three-edge bearing test strength from equation (1).

$$\text{T.E.B.} = \left(\frac{W_L}{1.5^*} + \frac{W_E}{L_f}\right) \text{F.S.}$$

$$= \frac{2137}{1.5} \times 1.5$$

$$= 2137 \text{ pounds per linear foot}$$

Enter Figure 1 at D = 12 inches on the horizontal scale and project a vertical line to the nonreinforced concrete pipe class and clay pipe class which has a three-edge bearing strength greater than 2137 as indicated on the vertical scale.

Answer: A Class 2 nonreinforced concrete pipe or an extra strength clay pipe is required.

The required strength class could also have been obtained from Table I.

* maximum live load factor of 1.5 is recommended

Technical data given herein are considered reliable, but no guarantee is made or liability assumed.

PRINTED IN U.S.A.

PERCENTAGE OF WHEEL LOADS
TRANSMITTED TO UNDERGROUND PIPES*

Tabulated figures show percentage of wheel load applied to one lineal foot of pipe.

Depth of Backfill Over Top of Pipe in feet	Pipe Size Inches	6″	8″	10″	12″	15″	18″	21″	24″	27″	30″	33″	36″	39″	42″
	Outside Diam. of Pipe in Feet (Approx.)	.64	.81	1.0	1.2	1.5	1.8	2.1	2.4	2.7	3.0	3.3	3.5	3.9	4.2
1		12.8	15.0	17.3	20.0	22.6	24.8	26.4	27.2	28.0	28.6	29.0	29.4	29.8	29.9
2		5.7	7.0	8.3	9.6	11.5	13.2	15.0	15.6	16.8	17.8	18.7	19.5	20.0	20.5
3		2.9	3.6	4.3	5.2	6.4	7.5	8.6	9.3	10.2	11.1	11.8	12.5	12.9	13.5
4		1.7	2.1	2.5	3.1	3.9	4.6	5.3	5.8	6.5	7.2	7.9	8.5	8.8	9.2
5		1.2	1.4	1.7	2.1	2.6	3.1	3.6	3.9	4.4	4.9	5.3	5.8	6.1	6.4
6		0.8	1.0	1.1	1.4	1.8	2.1	2.5	2.8	3.1	3.5	3.8	4.2	4.3	4.4
7		0.5	0.7	0.8	1.0	1.3	1.6	1.9	2.1	2.3	2.6	2.9	3.2	3.3	3.5
8		0.4	0.5	0.6	0.8	1.0	1.2	1.4	1.6	1.8	2.0	2.2	2.3	2.5	2.6

*These figures make no allowance for impact. For moving loads (particularly construction equipment, etc.) on unsurfaced areas the percentage figures above should be multiplied by an impact factor of 1.5 Highway, 1.75 Railway, 1.00 Airfield Runways, 1.50 Airfield Taxiways.

Unless other data are available, it is safe to estimate that truck wheel loads are the greatest live loads to be supported. H-20 wheel loadings are standard for highway and bridge design and are equally applicable for estimating live loads on sewers.

H-20 refers to loadings resulting from the passage of trucks having a gross weight of 20 tons, 80% of which is on the rear axle, with axle spacing of 14′0″ center to center, and a wheel gauge of 6′0″, each rear wheel carrying one half this load or 16,000 pounds each without impact.

Superimposed Loads

Sewers located in yards of industrial plants or under earth fills may have to withstand superimposed loads in addition to trench backfill loads.

Where superimposed loads are encountered they are added to the predetermined backfill load. To compute the superimposed load on a pipe the following Marston formula is used.

$$W_{us} = C_{us} B_d U_s$$

W_{us} = The average total vertical load on a section of a conduit due to U_s, pounds per linear foot.

C_{us} = A coefficient for superimposed loads on ditch conduits, abstract number. (See table on p. 41.)

B_d = Horizontal breadth of ditch at top of conduit, feet.

U_s = uniformly distributed, superimposed load, pounds per square foot.

H = Vertical height from top of conduit to upper surface of fill, feet.

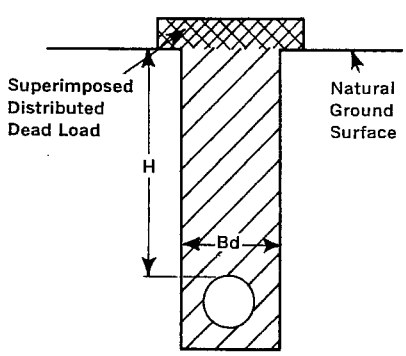

Load analysis on 10" Sanitary Sewer

Wheel Load = 4032 #/ft²

Assume Soil Dry Clay 120 #/ft³

OD = 1'-0" D = 8.21'

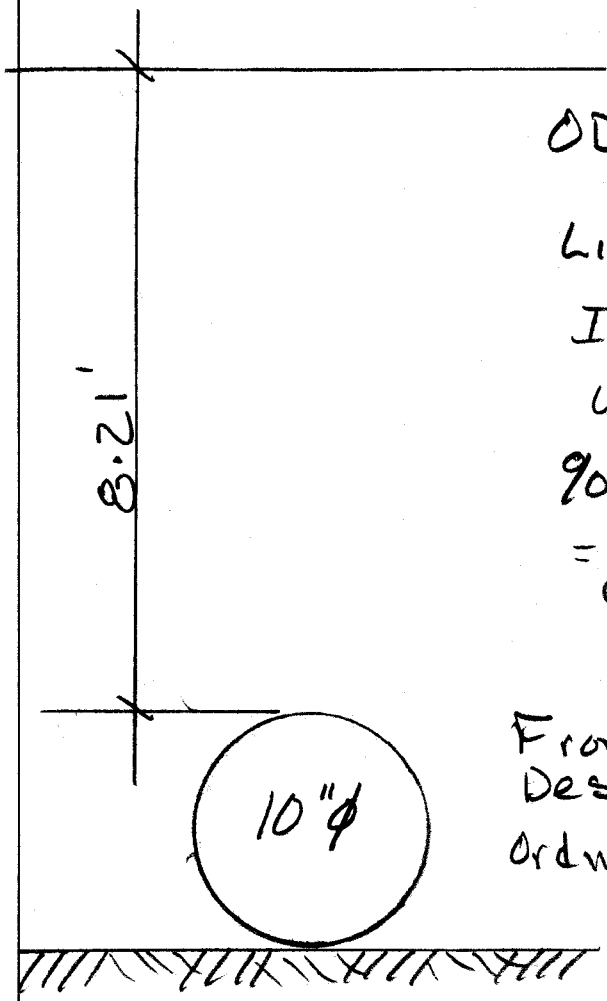

Live Load:

Impact factor Range 1.0 to 1.75

Use 1.75 (most conservative)

% of wheel load to reach pipe

= 0.6 % from Table page 40 Clay Pipe Engrg Manual

From Table 14 Conc Pipe Design Manual

Ordinary Clay @ 8' depth

Maximum Value = 1193 #/lf

Max Actual Load = (0.006 x 1.75)(4032)# + 1193 #/lf

= 1235 #/lf.

Bearing Strength of 10" Conc Pipe from ACPI Design Data 25 = 2000 #

1235 #/lf < 2000 #/lf.

Load analysis on 8" Sanitary Sewer

OD = 0.8125' D = 9.1875'

Wheel load = 4032 #/ft²

Assume Soil Dry Clay 120#/ft³

Live Load:

Impact factor Range 1.0 to 1.75 Use 1.75 reasons stated previously. (most Conservative)

% of wheel load to Reach pipe = 0.5 %

from Table page 40 Clay Pipe Engrg Manual.

From Table 13 Concrete Pipe Design Manual

Max Value for 10' depth = 1213 #/lf

Max Actual Load = Impact Load + Backfill Load

$= (0.005 \times 1.75)(4032)\frac{\#}{ft^2} + 1213\ \#/lf$

$= 1248.28\ \#/lf$

Bearing Strength of 8" Conc Pipe from ACPI Design Data 25 = 2000 #

1248 #/lf < 2000 #/lf

13-782 500 SHEETS, FILLER 5 SQUARE
42-381 50 SHEETS EYE-EASE® 5 SQUARE
42-382 100 SHEETS EYE-EASE® 5 SQUARE
42-389 200 SHEETS EYE-EASE® 5 SQUARE
National® Brand
Made in U.S.A.

TABLE 13

BACKFILL LOADS ON CIRCULAR PIPE IN TRENCH INSTALLATION

8″ 8″

*100 POUNDS PER CUBIC FOOT BACKFILL MATERIAL — LOADS IN POUNDS PER LINEAR FOOT

A — SAND AND GRAVEL Kμ′—0.165

HEIGHT OF BACKFILL H ABOVE TOP OF PIPE, FEET	TRENCH WIDTH AT TOP OF PIPE 1′-6″	1′-9″	2′-0″	2′-3″	2′-6″	2′-9″	3′-0″	3′-3″	3′-6″	4′-0″	▲TRANSITION WIDTH
5	454	566	**603**								1′-10″
6	499	628	**724**								1′-11″
7	535	680	**847**								2′- 0″
8	564	722	888	**969**							2′- 1″
9	587	758	937	**1088**							2′- 2″
10	606	787	979	**1213**							2′- 3″
11	621	811	1014	1228	**1332**						2′- 4″
12	633	831	1044	1270	**1458**						2′- 5″
13	642	848	1070	1306	**1575**						2′- 6″
14	650	861	1091	1337	1595	**1698**					2′- 7″
15	656	873	1010	1364	1632	**1818**					2′- 8″
16	661	882	1125	1387	1664	**1942**					2′- 9″
17	665	890	1138	1407	1693	1993	**2065**				2′-10″
18	668	896	1149	1424	1717	2027	**2182**				2′-10″
19	671	902	1159	1439	1739	2057	**2308**				2′-11″
20	673	906	1167	1452	1758	2083	**2429**				3′- 0″
21	675	910	1174	1463	1775	2107	2456	**2553**			3′- 1″
22	676	913	1179	1473	1790	2128	2484	**2673**			3′- 2″
23	677	915	1184	1481	1802	2146	2510	**2788**			3′- 2″
24	678	917	1189	1488	1814	2163	2532	**2910**			3′- 3″
25	679	919	1192	1494	1824	2177	2552	2947	**3041**		3′- 4″
26	679	921	1195	1500	1832	2190	2571	2972	**3154**		3′- 4″
27	680	922	1198	1504	1840	2201	2587	2994	**3278**		3′- 5″
28	680	923	1200	1508	1846	2212	2601	3014	**3398**		3′- 6″
29	680	924	1201	1512	1852	2221	2614	3032	**3514**		3′- 6″
30	680	924	1203	1515	1857	2229	2626	3048	3492	**3646**	3′- 7″
31	681	925	1204	1517	1862	2236	2637	3063	3512	**3776**	3′- 8″
32	681	925	1205	1520	1866	2242	2646	3076	3530	**3880**	3′- 8″
33	681	926	1206	1521	1869	2247	2654	3088	3546	**4004**	3′- 9″
34	681	926	1207	1523	1872	2252	2662	3099	3561	**4124**	3′- 9″
35	681	926	1208	1525	1875	2257	2669	3109	3575	**4241**	3′-10″
36	681	926	1208	1526	1877	2261	2675	3118	3587	**4384**	3′-11″
37	681	927	1209	1527	1879	2264	2680	3126	3598	**4495**	3′-11″
38	681	927	1209	1528	1881	2267	2685	3133	3608	**4603**	4′- 0″
39	681	927	1210	1529	1882	2270	2689	3139	3618	**4740**	4′- 0″
40	681	927	1210	1529	1884	2272	2693	3142	3626	**4877**	4′- 1″

B — SATURATED TOP SOIL Kμ′—0.150

TRENCH WIDTH AT TOP OF PIPE 1′-6″	1′-9″	2′-0″	2′-3″	2′-6″	2′-9″	3′-0″	3′-3″	3′-6″	4′-0″	▲TRANSITION WIDTH	HEIGHT OF BACKFILL H ABOVE TOP OF PIPE, FEET
474	**603**									1′- 9″	5
524	655	**724**								1′-11″	6
565	713	**847**								2′- 0″	7
598	761	931	**969**							2′- 1″	8
626	802	987	**1088**							2′- 2″	9
648	836	1035	**1213**							2′- 3″	10
666	865	1077	**1332**							2′- 3″	11
681	890	1112	1346	**1458**						2′- 4″	12
694	910	1143	1389	**1575**						2′- 5″	13
704	928	1170	1426	**1698**						2′- 6″	14
712	942	1192	1459	1738	**1818**					2′- 7″	15
719	955	1212	1487	1777	**1942**					2′- 8″	16
724	965	1229	1512	1812	**2065**					2′- 8″	17
729	974	1243	1534	1843	**2182**					2′- 9″	18
733	981	1256	1553	1870	2203	**2308**				2′-10″	19
736	987	1266	1570	1894	2236	**2429**				2′-11″	20
738	992	1276	1584	1915	2265	**2553**				2′-11″	21
740	997	1284	1597	1934	2292	**2673**				3′- 0″	22
742	1001	1291	1608	1951	2315	2699	**2788**			3′- 1″	23
743	1004	1296	1618	1966	2336	2727	**2910**			3′- 1″	24
744	1006	1301	1627	1979	2355	2753	**3041**			3′- 2″	25
745	1008	1306	1634	1991	2373	2777	**3154**			3′ 3″	26
746	1010	1310	1641	2001	2388	2798	**3278**			3′- 3″	27
747	1012	1313	1647	2010	2401	2817	3255	**3398**		3′- 4″	28
747	1013	1316	1652	2019	2414	2834	3278	**3514**		3′- 5″	29
748	1014	1318	1656	2026	2425	2850	3300	**3646**		3′- 5″	30
748	1015	1320	1660	2032	2435	2864	3319	3776		3′- 6″	31
748	1016	1322	1663	2038	2444	2877	3337	**3880**		3′- 6″	32
748	1017	1323	1666	2043	2451	2889	3353	3842	**4004**	3′- 7″	33
749	1017	1325	1669	2048	2459	2899	3368	3861	**4124**	3′- 8″	34
749	1018	1326	1671	2052	2465	2909	3381	3880	**4241**	3′- 8″	35
749	1018	1327	1673	2055	2471	2918	3393	3896	**4384**	3′- 9″	36
749	1019	1328	1675	2058	2476	2925	3405	3912	**4495**	3′- 9″	37
749	1019	1328	1676	2061	2480	2932	3415	3926	**4603**	3′-10″	38
749	1019	1329	1678	2064	2485	2939	3424	3939	**4740**	3′-10″	39
749	1019	1330	1679	2066	2488	2945	3433	3950	**4877**	3′-11″	40

C — ORDINARY CLAY Kμ′—0.130

HEIGHT OF BACKFILL H ABOVE TOP OF PIPE, FEET	TRENCH WIDTH AT TOP OF PIPE 1′-6″	1′-9″	2′-0″	2′-3″	2′-6″	2′-9″	3′-0″	3′-3″	3′-6″	4′-0″	▲TRANSITION WIDTH
5	501	**603**									1′- 9″
6	559	694	**724**								1′-10″
7	608	761	**847**								1′-11″
8	649	819	**969**								2′- 0″
9	683	868	**1088**								2′- 0″
10	712	911	1119	**1213**							2′- 1″
11	736	948	1170	**1332**							2′- 2″
12	757	979	1215	**1458**							2′- 3″
13	774	1007	1254	1513	**1575**						2′- 4″
14	788	1030	1289	1560	**1698**						2′- 4″
15	801	1051	1319	1603	**1818**						2′- 5″
16	811	1068	1346	1640	**1942**						2′- 6″
17	819	1083	1369	1674	1993	**2065**					2′- 7″
18	827	1096	1390	1703	2034	**2182**					2′- 7″
19	833	1107	1408	1730	2070	**2308**					2′- 8″
20	838	1117	1424	1754	2103	**2429**					2′- 9″
21	842	1125	1438	1775	2133	**2553**					2′- 9″
22	846	1133	1450	1793	2159	2545	**2673**				2′-10″
23	849	1139	1461	1810	2184	2578	**2788**				2′-11″
24	851	1144	1470	1825	2205	2607	**2910**				2′-11″
25	854	1149	1478	1838	2225	2635	**3041**				3′- 0″
26	855	1153	1486	1850	2242	2659	**3154**				3′- 0″
27	857	1156	1492	1861	2258	2682	3128	**3278**			3′- 1″
28	858	1159	1498	1870	2273	2702	3155	**3398**			3′- 2″
29	859	1162	1502	1878	2286	2721	3181	**3514**			3′- 2″
30	860	1164	1507	1886	2297	2738	3204	**3646**			3′- 3″
31	861	1166	1511	1892	2308	2753	3225	**3776**			3′- 3″
32	862	1167	1514	1898	2317	2767	3245	3748	**3880**		3′- 4″
33	862	1169	1517	1904	2326	2780	3263	3772	**4004**		3′- 4″
34	862	1170	1519	1908	2333	2791	3279	3794	**4124**		3′- 5″
35	863	1171	1522	1913	2340	2802	3294	3815	**4241**		3′- 5″
36	863	1172	1524	1916	2346	2811	3308	3834	**4384**		3′- 6″
37	863	1173	1525	1920	2352	2820	3321	3851	**4495**		3′- 6″
38	864	1173	1527	1922	2357	2828	3333	3868	4431	**4603**	3′- 7″
39	864	1174	1528	1925	2362	2835	3343	3883	4451	**4740**	3′- 7″
40	864	1174	1529	1927	2366	2842	3353	3896	4470	**4877**	3′- 8″

maximum value

D — SATURATED CLAY Kμ′—0.110

TRENCH WIDTH AT TOP OF PIPE 1′-6″	1′-9″	2′-0″	2′-3″	2′-6″	2′-9″	3′-0″	3′-3″	3′-6″	4′-0″	▲TRANSITION WIDTH	HEIGHT OF BACKFILL H ABOVE TOP OF PIPE, FEET
531	**603**									1′- 8″	5
598	**724**									1′- 9″	6
656	814	**847**								1′-10″	7
706	882	**969**								1′-10″	8
749	943	**1088**								1′-11″	9
786	996	**1213**								2′- 0″	10
818	1042	1276	**1332**							2′- 1″	11
846	1084	1332	**1458**							2′- 1″	12
870	1120	1383	**1575**							2′- 2″	13
891	1152	1428	**1698**							2′- 3″	14
909	1180	1469	**1818**							2′- 3″	15
924	1205	1505	1819	**1942**						2′- 4″	16
938	1227	1537	1864	**2065**						2′- 5″	17
949	1247	1567	1905	**2182**						2′- 5″	18
959	1264	1593	1942	**2308**						2′- 6″	19
968	1279	1616	1975	2352	**2429**					2′- 7″	20
975	1292	1637	2005	2393	**2553**					2′- 7″	21
982	1304	1656	2033	2431	**2673**					2′- 8″	22
987	1314	1673	2058	2465	**2788**					2′- 8″	23
992	1323	1688	2080	2497	**2910**					2′- 9″	24
996	1331	1701	2101	2526	**3041**					2′- 9″	25
1000	1339	1714	2120	2552	3008	**3154**				2′-10″	26
1003	1345	1724	2136	2576	3041	**3278**				2′-10″	27
1005	1350	1734	2152	2599	3071	**3398**				2′-11″	28
1008	1355	1743	2166	2619	3099	**3514**				3′- 0″	29
1010	1360	1751	2178	2638	3125	**3646**				3′- 0″	30
1011	1363	1758	2190	2655	3149	3669	**3776**			3′- 1″	31
1013	1367	1764	2200	2670	3171	3699	**3880**			3′- 1″	32
1014	1370	1769	2209	2685	3192	3727	**4004**			3′- 2″	33
1015	1372	1774	2218	2698	3211	3752	**4124**			3′- 2″	34
1016	1374	1779	2226	2710	3228	3776	**4241**			3′- 2″	35
1017	1376	1783	2233	2721	3244	3798	**4384**			3′- 3″	36
1018	1378	1787	2239	2731	3259	3819	**4495**			3′- 3″	37
1018	1380	1790	2245	2740	3273	3838	4434	**4603**		3′- 4″	38
1019	1381	1793	2250	2749	3285	3856	4458	**4740**		3′- 4″	39
1019	1382	1795	2255	2756	3297	3873	4480	**4877**		3′- 5″	40

** For backfill weighing 110 pounds per cubic foot, increase loads 10%; for 120 pounds per cubic foot, increase 20%; etc.*

▲Transition loads **(bold type)** *and widths based on Kμ—0.19, $r_{sd}p$—0.5 in the embankment equation*

Interpolate for intermediate heights of backfill and/or trench widths

TABLE 14

10″ BACKFILL LOADS ON CIRCULAR PIPE IN TRENCH INSTALLATION 10″

*100 POUNDS PER CUBIC FOOT BACKFILL MATERIAL — LOADS IN POUNDS PER LINEAR FOOT

A — SAND AND GRAVEL Kμ′—0.165

HEIGHT OF BACKFILL H ABOVE TOP OF PIPE, FEET	TRENCH WIDTH AT TOP OF PIPE 1′-9″	2′-0″	2′-3″	2′-6″	2′-9″	3′-0″	3′-3″	3′-6″	4′-0″	4′-6″	▲TRANSITION WIDTH
5	566	680	**743**								2′- 2″
6	628	761	**893**								2′- 3″
7	680	830	984	**1043**							2′- 4″
8	722	888	1059	**1193**							2′- 5″
9	758	937	1124	**1344**							2′- 6″
10	787	979	1180	1388	**1495**						2′- 8″
11	811	1014	1228	1450	**1645**						2′- 8″
12	831	1044	1270	1505	1748	**1795**					2′-10″
13	848	1070	1306	1553	1810	**1946**					2′-11″
14	861	1091	1337	1595	1864	**2094**					3′- 0″
15	873	1110	1364	1632	1912	**2241**					3′- 0″
16	882	1125	1387	1664	1955	2258	**2395**				3′- 1″
17	890	1138	1407	1693	1993	2306	**2547**				3′- 2″
18	896	1149	1424	1717	2027	2350	**2698**				3′- 3″
19	902	1159	1439	1739	2057	2389	2735	**2842**			3′- 4″
20	906	1167	1452	1758	2083	2425	2780	**2994**			3′- 5″
21	910	1174	1463	1775	2107	2456	2821	**3150**			3′- 6″
22	913	1179	1473	1790	2128	2484	2857	**3301**			3′- 6″
23	915	1184	1481	1802	2146	2510	2891	3287	**3445**		3′- 7″
24	917	1189	1488	1814	2163	2532	2920	3325	**3595**		3′- 8″
25	919	1192	1494	1824	2177	2552	2947	3360	**3739**		3′- 9″
26	921	1195	1500	1832	2190	2571	2972	3392	**3892**		3′- 9″
27	922	1198	1504	1840	2201	2587	2994	3421	**4041**		3′-10″
28	923	1200	1508	1846	2212	2601	3014	3447	**4201**		3′-11″
29	924	1201	1512	1852	2221	2614	3032	3471	**4340**		4′- 0″
30	924	1203	1515	1857	2229	2626	3048	3492	**4493**		4′- 0″
31	925	1204	1517	1862	2236	2637	3063	3512	4472	**4642**	4′- 1″
32	925	1205	1520	1866	2242	2646	3076	3530	4502	**4786**	4′- 2″
33	926	1206	1521	1869	2247	2654	3088	3546	4529	**4950**	4′- 2″
34	926	1207	1523	1872	2252	2662	3099	3561	4555	**5085**	4′- 3″
35	926	1208	1525	1875	2257	2669	3109	3575	4578	**5243**	4′- 4″
36	926	1208	1526	1877	2261	2675	3118	3587	4599	**5397**	4′- 4″
37	927	1209	1527	1879	2264	2680	3126	3598	4619	**5549**	4′- 5″
38	927	1209	1528	1881	2267	2685	3133	3608	4637	**5697**	4′- 6″
39	927	1210	1529	1882	2270	2689	3139	3618	4654	**5842**	4′- 6″
40	927	1210	1529	1884	2272	2693	3145	3626	4669	**5983**	4′- 7″

B — SATURATED TOP SOIL Kμ′—0.150

HEIGHT OF BACKFILL H ABOVE TOP OF PIPE, FEET	TRENCH WIDTH AT TOP OF PIPE 1′-9″	2′-0″	2′-3″	2′-6″	2′-9″	3′-0″	3′-3″	3′-6″	4′-0″	4′-6″	▲TRANSITION WIDTH
5	587	703	**743**								2′- 1″
6	655	791	**893**								2′- 2″
7	713	866	**1043**								2′- 3″
8	761	931	1106	**1193**							2′- 4″
9	802	987	1179	**1344**							2′- 5″
10	836	1035	1242	1455	**1495**						2′- 7″
11	865	1077	1298	1526	**1645**						2′- 8″
12	890	1112	1346	1589	**1795**						2′- 9″
13	910	1143	1389	1645	**1946**						2′- 9″
14	928	1170	1426	1695	1973	**2094**					2′-10″
15	942	1192	1459	1738	2030	**2241**					2′-11″
16	955	1212	1487	1777	2080	**2395**					3′- 0″
17	965	1229	1512	1812	2126	2451	**2547**				3′- 1″
18	974	1243	1534	1843	2167	2504	**2698**				3′- 2″
19	981	1256	1553	1870	2203	2551	**2842**				3′- 2″
20	987	1266	1570	1894	2236	2593	**2994**				3′- 3″
21	992	1276	1584	1915	2265	2632	3014	**3150**			3′- 4″
22	997	1284	1597	1934	2292	2667	3058	**3301**			3′- 5″
23	1001	1291	1608	1951	2315	2699	3099	**3445**			3′- 5″
24	1004	1296	1618	1966	2336	2727	3136	**3595**			3′- 6″
25	1006	1301	1627	1979	2355	2753	3170	3604	**3739**		3′- 7″
26	1008	1306	1634	1991	2373	2777	3201	3643	**3892**		3′- 8″
27	1010	1310	1641	2001	2388	2798	3229	3679	**4041**		3′- 8″
28	1012	1313	1647	2010	2401	2817	3255	3712	**4201**		3′- 9″
29	1013	1316	1652	2019	2414	2834	3278	3743	**4340**		3′-10″
30	1014	1318	1656	2026	2425	2850	3300	3771	**4493**		3′-10″
31	1015	1320	1660	2032	2435	2864	3319	3796	**4642**		3′-11″
32	1016	1322	1663	2038	2444	2877	3337	3820	**4786**		4′- 0″
33	1017	1323	1666	2043	2451	2889	3353	3842	**4950**		4′- 0″
34	1017	1325	1669	2048	2459	2899	3368	3861	4916	**5085**	4′- 1″
35	1018	1326	1671	2052	2465	2909	3381	3880	4946	**5243**	4′- 2″
36	1018	1327	1673	2055	2471	2918	3393	3896	4974	**5397**	4′- 2″
37	1019	1328	1675	2058	2476	2925	3405	3912	5000	**5549**	4′- 3″
38	1019	1328	1676	2061	2480	2932	3415	3926	5024	**5697**	4′- 3″
39	1019	1329	1678	2064	2485	2939	3424	3939	5047	**5842**	4′- 4″
40	1019	1330	1679	2066	2488	2945	3433	3950	5067	**5983**	4′- 5″

C — ORDINARY CLAY Kμ′—0.130

HEIGHT OF BACKFILL H ABOVE TOP OF PIPE, FEET	TRENCH WIDTH AT TOP OF PIPE 1′-9″	2′-0″	2′-3″	2′-6″	2′-9″	3′-0″	3′-3″	3′-6″	4′-0″	4′-6″	▲TRANSITION WIDTH
5	617	**743**									2′- 0″
6	694	833	**893**								2′- 1″
7	761	919	**1043**								2′- 2″
8	819	994	**1193**								2′- 3″
9	868	1060	1258	**1344**							2′- 4″
10	911	1119	1334	**1495**							2′- 5″
11	948	1170	1400	**1645**							2′- 6″
12	979	1215	1460	1713	**1795**						2′- 7″
13	1007	1254	1513	1781	**1946**						2′- 8″
14	1030	1289	1560	1843	**2094**						2′- 8″
15	1051	1319	1603	1898	**2241**						2′- 9″
16	1068	1346	1640	1948	2267	**2395**					2′-10″
17	1083	1369	1674	1993	2325	**2547**					2′-11″
18	1096	1390	1703	2034	2378	**2698**					3′- 0″
19	1107	1408	1730	2070	2426	**2842**					3′- 0″
20	1117	1424	1754	2103	2469	2849	**2994**				3′- 1″
21	1125	1438	1775	2133	2509	2900	**3150**				3′- 2″
22	1133	1450	1793	2159	2545	2947	**3301**				3′- 2″
23	1139	1461	1810	2184	2578	2989	**3445**				3′- 3″
24	1144	1470	1825	2205	2607	3029	3466	**3595**			3′- 4″
25	1149	1478	1838	2225	2635	3064	3512	**3739**			3′- 5″
26	1153	1486	1850	2242	2659	3097	3554	**3892**			3′- 5″
27	1156	1492	1861	2258	2682	3128	3593	**4041**			3′- 6″
28	1159	1498	1870	2273	2702	3155	3630	**4201**			3′- 6″
29	1162	1502	1878	2286	2721	3181	3663	4165	**4340**		3′- 7″
30	1164	1507	1886	2297	2738	3204	3693	4204	**4493**		3′- 8″
31	1166	1511	1892	2308	2753	3225	3722	4240	**4642**		3′- 8″
32	1167	1514	1898	2317	2767	3245	3748	4274	**4786**		3′- 9″
33	1169	1517	1904	2326	2780	3263	3772	4305	**4950**		3′- 9″
34	1170	1519	1908	2333	2791	3279	3794	4334	**5085**		3′-10″
35	1171	1522	1913	2340	2802	3294	3815	4361	**5243**		3′-11″
36	1172	1524	1916	2346	2811	3308	3834	4386	**5397**		3′-11″
37	1173	1525	1920	2352	2820	3321	3851	4409	**5549**		4′- 0″
38	1173	1527	1922	2357	2828	3333	3868	4431	**5697**		4′- 0″
39	1174	1528	1925	2362	2835	3343	3883	4451	5666	**5842**	4′- 1″
40	1174	1529	1927	2366	2842	3353	3896	4470	5696	**5983**	4′- 1″

Maximum value

D — SATURATED CLAY Kμ′—0.110

HEIGHT OF BACKFILL H ABOVE TOP OF PIPE, FEET	TRENCH WIDTH AT TOP OF PIPE 1′-9″	2′-0″	2′-3″	2′-6″	2′-9″	3′-0″	3′-3″	3′-6″	4′-0″	4′-6″	▲TRANSITION WIDTH
5	649	**743**									1′-11″
6	737	**893**									2′- 0″
7	814	976	**1043**								2′- 1″
8	882	1064	**1193**								2′- 2″
9	943	1142	**1344**								2′- 3″
10	996	1212	1435	**1495**							2′- 4″
11	1042	1276	1516	**1645**							2′- 5″
12	1084	1332	1589	**1795**							2′- 5″
13	1120	1383	1655	**1946**							2′- 6″
14	1152	1428	1715	2012	**2094**						2′- 7″
15	1180	1469	1770	2082	**2241**						2′- 8″
16	1205	1505	1819	2145	**2395**						2′- 8″
17	1227	1537	1864	2204	**2547**						2′- 9″
18	1247	1567	1905	2258	2623	**2698**					2′-10″
19	1264	1593	1942	2307	2685	**2842**					2′-10″
20	1279	1616	1975	2352	2743	**2994**					2′-11″
21	1292	1637	2005	2393	2796	**3150**					3′- 0″
22	1304	1656	2033	2431	2846	**3301**					3′- 0″
23	1314	1673	2058	2465	2891	3333	**3445**				3′- 1″
24	1323	1688	2080	2497	2933	3387	**3595**				3′- 1″
25	1331	1701	2101	2526	2972	3436	**3739**				3′- 2″
26	1339	1714	2120	2552	3008	3483	**3892**				3′- 2″
27	1345	1724	2136	2576	3041	3526	**4041**				3′- 3″
28	1350	1734	2152	2599	3071	3566	4079	**4201**			3′- 4″
29	1355	1743	2166	2619	3099	3603	4126	**4340**			3′- 4″
30	1360	1751	2178	2638	3125	3637	4171	**4493**			3′- 5″
31	1363	1758	2190	2655	3149	3669	4212	**4642**			3′- 5″
32	1367	1764	2200	2670	3171	3699	4250	**4786**			3′- 6″
33	1370	1769	2209	2685	3192	3727	4286	**4950**			3′- 6″
34	1372	1774	2218	2698	3211	3752	4320	4911	**5085**		3′- 7″
35	1374	1779	2226	2710	3228	3776	4351	4951	**5243**		3′- 7″
36	1376	1783	2233	2721	3244	3798	4381	4988	**5397**		3′- 8″
37	1378	1787	2239	2731	3259	3819	4408	5024	**5549**		3′- 8″
38	1380	1790	2245	2740	3273	3838	4434	5057	**5697**		3′- 9″
39	1381	1793	2250	2749	3285	3856	4458	5088	**5842**		3′- 9″
40	1382	1795	2255	2756	3297	3873	4480	5117	**5983**		3′-10″

** For backfill weighing 110 pounds per cubic foot, increase loads 10%; for 120 pounds per cubic foot, increase 20%; etc.*

▲Transition loads **(bold type)** *and widths based on Kμ—0.19, $r_{sd}p$—0.5 in the embankment equation*

Interpolate for intermediate heights of backfill and/or trench widths

Welded and Seamless Wrought Steel Pipe

Size	Schedule no	Diameter External inches	Diameter Internal inches	Thickness inches	Circumference External inches	Circumference Internal inches	Transverse area External sq in	Transverse area Internal sq in	Length of pipe per sq ft of surface area: External surface feet	Length of pipe per sq ft of surface area: Internal surface feet	Weight per ft of length lbs	Allowable working pressure at 100°F* lb/sq in	Water hammer factor
3	40 -S	3.500	3.068	0.216	10.996	9.638	9.621	7.393	1.091	1.245	7.58	1600	2.60
	80 -X		2.900	0.300	10.996	9.111	9.621	6.605	1.091	1.32	10.25	2600	2.92
	160		2.624	0.438	10.996	8.244	9.621	5.408	1.091	1.46	14.32	4100	3.56
	XX		2.300	0.600	10.996	7.226	9.621	4.155	1.091	1.66	18.58	6100	4.64
3½	40 -S	4.000	3.548	0.226	12.566	11.146	12.566	9.886	0.954	1.076	9.11	1500	1.94
	80 -X		3.364	0.318	12.566	10.57	12.566	8.888	0.954	1.14	12.50	2400	2.17
	XX		2.728	0.636	12.566	8.57	12.566	5.845	0.954	1.40		5600	3.29
4	40 -S	4.500	4.026	0.237	14.137	12.648	15.904	12.703	0.848	0.948	10.79	1400	1.51
	80 -X		3.826	0.337	14.137	12.020	15.904	11.497	0.848	0.998	14.98	2300	1.67
	120		3.624	0.438	14.137	11.39	15.904	10.315	0.848	1.05	19.00	3350	1.87
	160		3.438	0.531	14.137	10.80	15.904	9.282	0.848	1.11	22.51	4000	2.08
	XX		3.152	0.674	14.137	9.90	15.904	7.803	0.848	1.21	27.54	5300	2.47
5	40 -S	5.563	5.047	0.258	17.477	15.856	24.306	20.006	0.686	0.756	14.62	1300	0.960
	80 -X		4.813	0.375	17.477	15.120	24.306	18.19	0.686	0.793	20.78	2090	1.06
	120		4.563	0.500	17.477	14.34	24.306	16.35	0.686	0.837	27.04	2950	1.18
	160		4.313	0.625	17.477	13.55	24.306	14.61	0.686	0.897	32.96	3850	1.32
	XX		4.063	0.750	17.477	12.76	24.306	12.97	0.686	0.940	38.55	4780	1.49
6	40 -S	6.625	6.065	0.280	20.813	19.054	34.472	28.891	0.756	0.629	18.97	1210	0.666
	80 -X		5.761	0.432	20.813	18.099	34.472	26.07	0.756	0.663	28.57	2070	0.738
	120		5.501	0.562	20.813	17.29	34.472	23.77	0.756	0.695	36.39	2850	0.810
	160		5.187	0.719	20.813	16.30	34.472	21.13	0.756	0.736	45.35	3760	0.912
	XX		4.897	0.864	20.813	15.38	34.472	18.83	0.756	0.780	53.16	4660	1.02
8	20	8.625	8.125	0.250	27.096	25.53	58.43	51.87	0.443	0.470	22.36	795	0.371
	30		8.071	0.277	27.096	25.39	58.43	51.30	0.443	0.473	24.70	910	0.375
	40 S		7.981	0.322	27.096	25.07	58.43	50.03	0.443	0.478	28.55	1100	0.385
	60		7.813	0.406	27.096	24.54	58.43	47.94	0.443	0.489	35.64	1460	0.402
	80 X		7.625	0.500	27.096	23.955	58.43	45.66	0.443	0.500	43.39	1870	0.422
	100		7.437	0.594	27.096	23.36	58.43	43.44	0.443	0.514	50.95	2280	0.443
	120		7.187	0.719	27.096	22.58	58.43	40.56	0.443	0.532	60.71	2840	0.475
	140		7.001	0.812	27.096	21.99	58.43	38.50	0.443	0.546	67.76	3260	0.500
	XX		6.875	0.875	27.096	21.60	58.43	37.12	0.443	0.556	72.42	3560	0.519
	160		6.813	0.906	27.096	21.40	58.43	36.44	0.443	0.561	74.69	3700	0.529

Selected from ANSI B 36.10—1975. See notes, page 7-19.

Welded and Seamless Wrought Steel Pipe

Size	Schedule no	Diameter External inches	Diameter Internal inches	Thickness inches	Circumference External inches	Circumference Internal inches	Transverse area External sq in	Transverse area Internal sq in	Length of pipe per sq ft of surface area: External surface feet	Length of pipe per sq ft of surface area: Internal surface feet	Weight per ft of length lbs	Allowable working pressure at 100°F* lb/sq in	Water hammer factor
10	20	10.750	10.250	0.250	33.77	32.20	90.76	82.52	0.355	0.373	28.04	636	.233
	30		10.136	0.307	33.77	31.84	90.76	80.69	0.355	0.377	34.24	827	.239
	40 S		10.020	0.365	33.77	31.48	90.76	78.85	0.355	0.381	40.48	1030	.244
	60 X		9.750	0.500	33.77	30.63	90.76	74.66	0.355	0.392	54.74	1490	.258
	80		9.562	0.594	33.77	30.04	90.76	71.81	0.355	0.399	64.43	1800	.268
	100		9.312	0.719	33.77	29.25	90.76	68.10	0.355	0.410	77.03	2250	.283
	120		9.062	0.844	33.77	28.48	90.76	64.50	0.355	0.421	89.29	2700	.299
	140 XX		8.750	1.000	33.77	27.49	90.76	60.13	0.355	0.437	104.13	3310	.320
	160		8.500	1.125	33.77	26.70	90.76	56.75	0.355	0.449	115.64	3740	.340
12	20	12.750	12.250	0.250	40.06	38.48	127.68	117.86	0.299	0.312	33.38	535	.163
	30		12.090	0.330	40.06	37.98	127.68	114.80	0.299	0.316	43.77	760	.168
	S		12.000	0.375	40.06	37.70	127.68	113.10	0.299	0.318	49.56	890	.170
	40		11.938	0.406	40.06	37.50	127.68	111.93	0.299	0.320	53.52	1000	.172
	X		11.750	0.500	40.06	36.91	127.68	108.43	0.299	0.325	65.42	1250	.178
	60		11.626	0.562	40.06	36.52	127.68	106.16	0.299	0.329	73.15	1425	.181
	80		11.374	0.688	40.06	35.73	127.68	101.61	0.299	0.336	88.63	1800	.190
	100		11.062	0.844	40.06	34.75	127.68	96.11	0.299	0.345	107.32	2255	.200
	120 XX		10.750	1.000	40.06	33.77	127.68	90.76	0.299	0.355	125.49	2700	.212
	140		10.500	1.125	40.06	32.99	127.68	86.59	0.299	0.364	139.67	3115	.222
	160		10.126	1.312	40.06	31.81	127.68	80.53	0.299	0.377	160.27	3700	.239
14	10	14.000	13.500	0.250	43.98	42.41	153.94	143.14	0.272	0.283	36.71	485	.134
	20		13.376	0.312	43.98	42.02	153.94	140.52	0.272	0.286	45.61	645	.137
	30 S		13.250	0.375	43.98	41.63	153.94	137.89	0.272	0.288	54.57	810	.138
	40		13.124	0.438	43.98	41.23	153.94	135.28	0.272	0.291	63.44	970	.142
	X		13.000	0.500	43.98	40.84	153.94	132.73	0.272	0.294	72.09	1140	.145
	60		12.812	0.594	43.98	40.25	153.94	128.92	0.272	0.298	85.05	1380	.149
	80		12.500	0.750	43.98	39.26	153.94	122.72	0.272	0.306	106.13	1795	.157
	100		12.124	0.938	43.98	38.09	153.94	115.45	0.272	0.315	130.85	2300	.167
	120		11.876	1.062	43.98	37.31	153.94	110.77	0.272	0.322	150.79	2645	.174
	140		11.500	1.250	43.98	36.13	153.94	103.87	0.272	0.332	170.21	3170	.185
	160		11.188	1.406	43.98	35.15	153.94	93.31	0.272	0.341	189.11	3615	.206

Selected from ANSI B 36.10—1975. See notes, page 7-19.

CONCRETE PIPE DESIGN MANUAL

First Edition 1970

$12.50

Prepared by
AMERICAN CONCRETE PIPE ASSOCIATION
1501 Wilson Boulevard
Arlington, Virginia 22209

CLAY PIPE ENGINEERING MANUAL

Engineering reference data applicable to the design and construction of sanitary sewer systems, storm water drainage systems, subsoil drainage, roadway drainage, airport drainage

NCPI
NATIONAL CLAY PIPE INSTITUTE
QUALITY • RESEARCH

Crystal Lake, Illinois. Atlanta, Ga.; Barrington, Ill.; Los Angeles, Calif.; Pittsburgh, Pa.; Washington, D.C.

Price $5.00

COPYRIGHT 1968 NATIONAL CLAY PIPE INSTITUTE

Printed in U.S.A.