# Attachment 4

# Ground Support Evaluation

GROUND SUPPORT EVALUATION

The consolidation tank system (tanks, containment pan, shield ⌀'s, & skid) will be placed on the ground & enclosed in a fabric structure.

The proposed location of the system is an area north of TAN-666, which is approximately 200' north-west of the V-tank site.

The area is currently vacant & requires clearing & grubbing of vegetation. Pit run gravel fill will be required to obtain a stable soil.

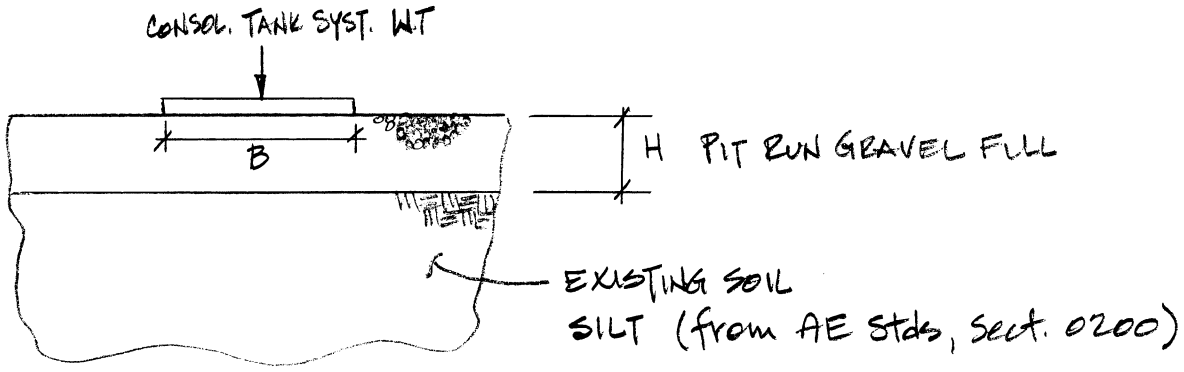


Pit Run Gravel : $\phi_1 = 35°$ & $\gamma_1 = 125$ pcf
Silt : $\phi_2 = 28°$ & $\gamma_2 = 100$ pcf
} conservative soil parameters

Will use Ref 11, p472 (see attached sheets) to determine required depth of gravel over existing soil by means of allowable bearing capacity.

## Loads

Tank Wt = $80^k$

Pan Wt = $6^k$

Skid Wt = $8.6^k$

Shield Wt = $14^k$ see pg 29

## Soil Bearing Pressure

conservatively assume large concentration of weight on small area of skid, as shown in Figure 5

for load on this area, use

wt of 1 tank = $80^k$

1/2 pan wt = $6/2 = 3^k$

1/2 skid wt = $8.6/2 = 4.3^k$

1/2 shield wt = $14/2 = 7^k$

$94.3^k$ say $100^k$

area of skid = $\frac{8}{12}\left[3(10' + 7')\right] = 34\ ft^2$

soil brg pressure = $q_b = \frac{100}{34} = 2.94$ ksf

## Soil Bearing Capacity

Ref. 11 p. 461 & 472

for gravel, $N_{q_1} = 33.3$ & $N_{\gamma_1} = 48.0$

for silt, $N_{q_2} = 14.7$ & $N_{\gamma_2} = 16.7$

$$\frac{\gamma_2 N_{\gamma_2}}{\gamma_1 N_{\gamma_1}} = \frac{100(16.7)}{125(48.0)} = 0.278 \quad \therefore K_s = 3.5 \text{ from Fig 10.22}$$

let $B = 7'$, $L = 10'$ & $D_f = 0'$ ; try $H = 1.75'$

$$q_{u(b)} = \gamma_1 (D_f + H) N_{q(2)} + \frac{1}{2}\left[1 - 0.4\left(\frac{B}{L}\right)\right]\gamma_2 B N_{\gamma(2)}$$

$$= 125(0+1.75)(14.7) + \frac{1}{2}\left[1 - 0.4\left(\frac{7}{10}\right)\right](100)(7)(16.7)$$

$$= 7424 \text{ psf}$$

shape factor $\lambda$'s = 1

$$q_u = q_{u(b)} + \left(1 + \frac{B}{L}\right)\gamma_1 H^2 \left(1 + \frac{2D_f}{H}\right)\left(\frac{K_s \tan\phi_1}{B}\right)\lambda's - \gamma_1 H \le q_{u(t)}$$

$$= 7424 + \left(1 + \frac{7}{10}\right)(125)(1.75)^2(1+0)\left(\frac{3.5 \tan 35^\circ}{7}\right)(1) - 125(1.75)$$

$$= 7433 \text{ psf}$$

$$q_{u(t)} = \gamma_1 D_f N_{q(1)} + \frac{1}{2}\left[1 - 0.4\frac{B}{L}\right]\gamma_1 B N_{\gamma(1)}$$

$$= 125(0)(33.3) + \frac{1}{2}\left[1 - 0.4\left(\frac{7}{10}\right)\right](125)(7)(48.0)$$

$$= 15120 \text{ psf}$$

ult. bearing capacity = $q_u$ = 7433 psf

allowable bearing capacity = $q_a = \frac{q_u}{SF}$

for the given situation, SF=2.5 seems appropriate to ensure sufficient gravel fill

$q_a = 7433/2.5 = 2970$ psf

Since $q_b \approx q_a$, then $H = 1.75'$ of gravel fill is OK

Use min. of 1'-9" pit run gravel fill over existing soil for support of skid & tanks

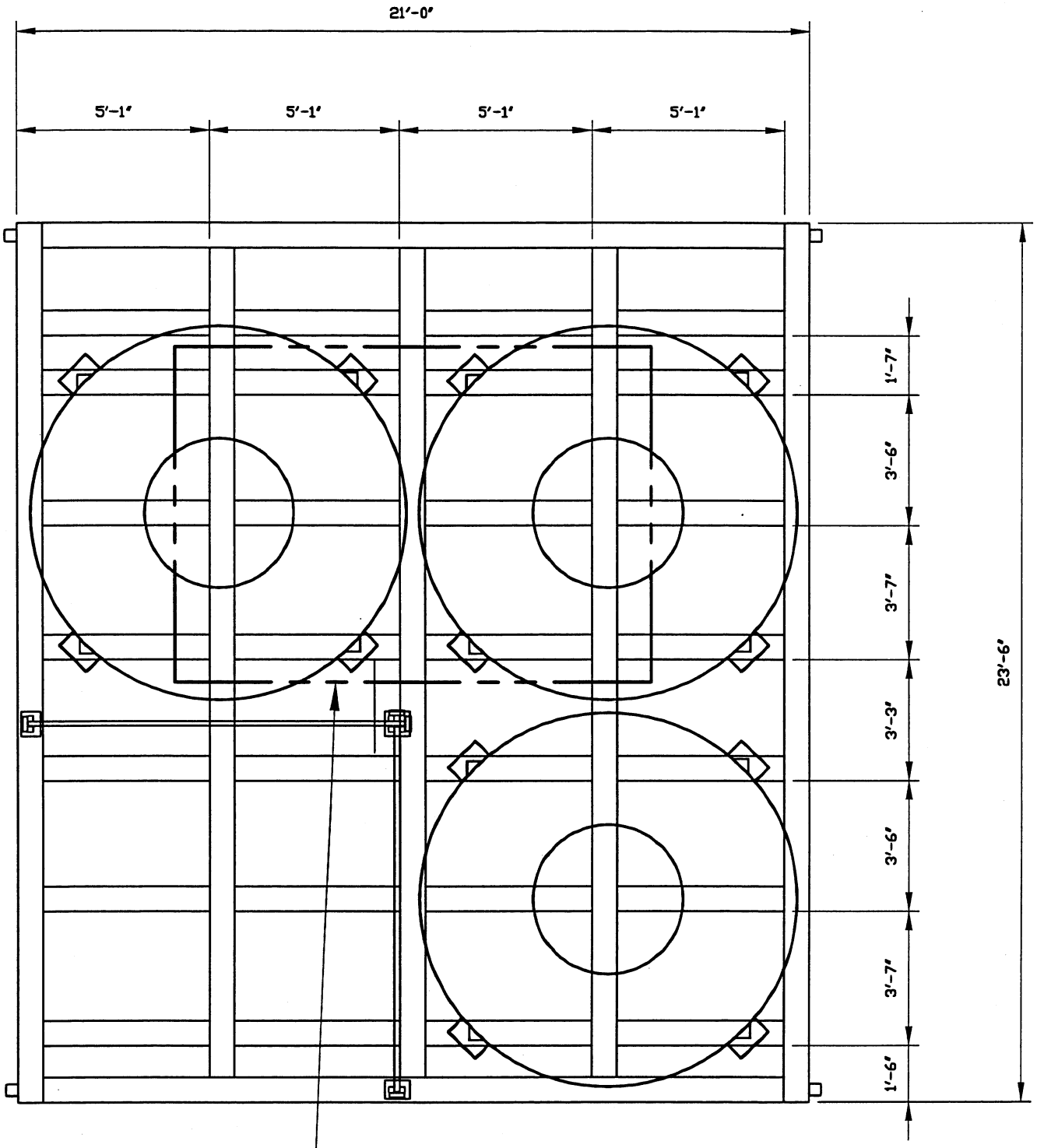


AREA OF SKID WITH GREATEST LOAD
7' x 10'

FIGURE 5
TANK SUPPORT FRAME

where $q_c$, $q_q$, and $q_\gamma$ are the contributions of cohesion, surcharge, and unit weight of soil, respectively

Reissner (1924) has expressed $q_q$ as

$$q_q = qN_q \tag{10.31}$$

where

$$\boxed{N_q = e^{\pi \tan \phi} \tan^2\left(45 + \frac{\phi}{2}\right)} \tag{10.32}$$

Prandtl (1921) has shown that

$$q_c = cN_c \tag{10.33}$$

where

cot

$$\boxed{\begin{array}{c} N_c = (N_q - 1)(\tan)\phi \\ \uparrow \\ \text{Eq. (10.32)} \end{array}} \tag{10.34}$$

Caquot and Kerisel (1953) have expressed $q_\gamma$ as

$$q_\gamma = \frac{1}{2} B\gamma N_\gamma \tag{10.35}$$

The numerical values given by Caquot and Kerisel can be approximated (Vesic, 1973) as

$$\boxed{\begin{array}{c} N_\gamma = 2(N_q + 1) \tan \phi \\ \uparrow \\ \text{Eq. (10.32)} \end{array}} \tag{10.36}$$

Combining Eqs. (10.30), (10.31), (10.33), and (10.35) we obtain

$$q_u = cN_c + qN_q + \frac{1}{2}\gamma BN_\gamma \tag{10.37}$$

This is in the same general form as given by Terzaghi [Eq. (10.9)]. However, the values of the bearing capacity factors are not the same. The values of $N_q$, $N_c$, and $N_\gamma$, defined by Eqs. (10.32), (10.34), and (10.36), are given in Table 10.1, but, for all practical purposes, Terzaghi's bearing capacity factors will yield good results. Differences in bearing capacity factors are usually minor as compared to the unknown soil parameters.

**Table 10.1** Bearing Capacity Factors[a] [Eqs. (10.32), (10.34), and (10.36)]

| $\phi$ (1) | $N_c$ (2) | $N_q$ (3) | $N_\gamma$ (4) | $N_q/N_c$ (5) | $\tan \phi$ (6) |
|---|---|---|---|---|---|
| 0 | 5.14 | 1.00 | 0.00 | 0.20 | 0.00 |
| 1 | 5.38 | 1.09 | 0.07 | 0.20 | 0.02 |
| 2 | 5.63 | 1.20 | 0.15 | 0.21 | 0.03 |
| 3 | 5.90 | 1.31 | 0.24 | 0.22 | 0.05 |
| 4 | 6.19 | 1.43 | 0.34 | 0.23 | 0.07 |
| 5 | 6.49 | 1.57 | 0.45 | 0.24 | 0.09 |
| 6 | 6.81 | 1.72 | 0.57 | 0.25 | 0.11 |
| 7 | 7.16 | 1.88 | 0.71 | 0.26 | 0.12 |
| 8 | 7.53 | 2.06 | 0.86 | 0.27 | 0.14 |
| 9 | 7.92 | 2.25 | 1.03 | 0.28 | 0.16 |
| 10 | 8.35 | 2.47 | 1.22 | 0.30 | 0.18 |
| 11 | 8.80 | 2.71 | 1.44 | 0.31 | 0.19 |
| 12 | 9.28 | 2.97 | 1.69 | 0.32 | 0.21 |
| 13 | 9.81 | 3.26 | 1.97 | 0.33 | 0.23 |
| 14 | 10.37 | 3.59 | 2.29 | 0.35 | 0.25 |
| 15 | 10.98 | 3.94 | 2.65 | 0.36 | 0.27 |
| 16 | 11.63 | 4.34 | 3.06 | 0.37 | 0.29 |
| 17 | 12.34 | 4.77 | 3.53 | 0.39 | 0.31 |
| 18 | 13.10 | 5.26 | 4.07 | 0.40 | 0.32 |
| 19 | 13.93 | 5.80 | 4.68 | 0.42 | 0.34 |
| 20 | 14.83 | 6.40 | 5.39 | 0.43 | 0.36 |
| 21 | 15.82 | 7.07 | 6.20 | 0.45 | 0.38 |
| 22 | 16.88 | 7.82 | 7.13 | 0.46 | 0.40 |
| 23 | 18.05 | 8.66 | 8.20 | 0.48 | 0.42 |
| 24 | 19.32 | 9.60 | 9.44 | 0.50 | 0.45 |
| 25 | 20.72 | 10.66 | 10.88 | 0.51 | 0.47 |
| 26 | 22.25 | 11.85 | 12.54 | 0.53 | 0.49 |
| 27 | 23.94 | 13.20 | 14.47 | 0.55 | 0.51 |
| 28 | 25.80 | 14.72 | 16.72 | 0.57 | 0.53 |
| 29 | 27.86 | 16.44 | 19.34 | 0.59 | 0.55 |
| 30 | 30.14 | 18.40 | 22.40 | 0.61 | 0.58 |
| 31 | 32.67 | 20.63 | 25.99 | 0.63 | 0.60 |
| 32 | 35.49 | 23.18 | 30.22 | 0.65 | 0.62 |
| 33 | 38.64 | 26.09 | 35.19 | 0.68 | 0.65 |
| 34 | 42.16 | 29.44 | 41.06 | 0.70 | 0.67 |
| 35 | 46.12 | 33.30 | 48.03 | 0.72 | 0.70 |
| 36 | 50.59 | 37.75 | 56.31 | 0.75 | 0.73 |
| 37 | 55.63 | 42.92 | 66.19 | 0.77 | 0.75 |
| 38 | 61.35 | 48.93 | 78.03 | 0.80 | 0.78 |
| 39 | 67.87 | 55.96 | 92.25 | 0.82 | 0.81 |
| 40 | 75.31 | 64.20 | 109.41 | 0.85 | 0.84 |
| 41 | 83.86 | 73.90 | 130.22 | 0.88 | 0.87 |
| 42 | 93.71 | 85.38 | 155.55 | 0.91 | 0.90 |
| 43 | 105.11 | 99.02 | 186.54 | 0.94 | 0.93 |
| 44 | 118.37 | 115.31 | 224.64 | 0.97 | 0.97 |
| 45 | 133.88 | 134.88 | 271.76 | 1.01 | 1.00 |
| 46 | 152.10 | 158.51 | 330.35 | 1.04 | 1.04 |
| 47 | 173.64 | 187.21 | 403.67 | 1.08 | 1.07 |
| 48 | 199.26 | 222.31 | 496.01 | 1.12 | 1.11 |
| 49 | 229.93 | 265.51 | 613.16 | 1.15 | 1.15 |
| 50 | 266.89 | 319.07 | 762.89 | 1.20 | 1.19 |

[a]After Vesic (1973)

EDF-5017 Rev 1

104/148

(Ref. 11)

(Ref. 11)

into consideration. Studies regarding the ultimate bearing capacity of foundations on layered soils are very limited at this time. Some of these cases will be briefly discussed below.

### *Foundations on Layered Sand—Dense over Loose*

A simple theory for determining the ultimate bearing capacity of a foundation that rests on a layer of dense sand underlain by loose sand has been proposed by Meyerhof and Hanna (1978). The basic principle of this theory can be explained with the aid of Figure 10.21, which is for a strip foundation. When the depth of the top dense sand layer is relatively thick, as shown by the right-hand half of Figure 10.21, the failure surface in soil under the foundation will be fully located inside the dense sand. For this case

$$q_u = q_{u(t)} = \gamma_1 D_f N_{q(1)} + \frac{1}{2}\gamma_1 B N_{\gamma(1)}$$

(for strip foundations) (10.50)

$$q_u = q_{u(t)} = \gamma_1 D_f N_{q(1)} + 0.3\gamma_1 B N_{\gamma(1)}$$

(for circular or square foundations) (10.51)

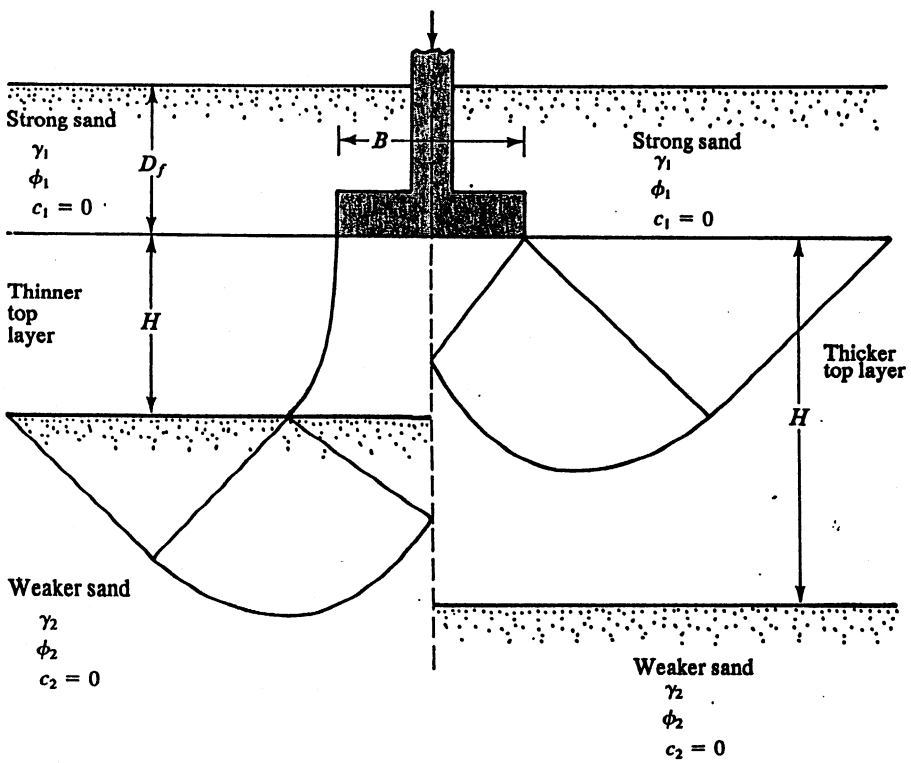


**Figure 10.21** Bearing capacity in layered sand—strong sand underlain by weak sand



and

$$q_u = q_{u(t)} = \gamma_1 D_f N_{q(1)} + \frac{1}{2}\left[1 - 0.4\left(\frac{B}{L}\right)\right]\gamma_1 B N_{\gamma(1)}$$

(for rectangular foundations) (10.52)

where $\gamma_1$ = unit weight of top layer (dense sand in this case)
$N_{q(1)}$ and $N_{\gamma(1)}$ = bearing capacity factors with reference to the soil friction angle, $\phi_1$ (Table 10.1)

Note that Eqs. (10.50), (10.51), and (10.52) are similar to Eq. (10.38). However, the depth factors have not been incorporated; they can be assumed to be somewhat conservative.

If the thickness of the dense sand layer under the foundation $H$ is relatively small, the failure in soil would take place by *punching* in the dense sand layer followed by a general shear failure in the bottom (or weaker) sand layer, as shown in the left-hand side of Figure 10.21. For such a case, the ultimate bearing capacity for the foundation can be given as

$$q_u = q_{u(b)} + \gamma_1 H^2\left(1 + \frac{2D_f}{H}\right)K_s \frac{\tan\phi_1}{B} - \gamma_1 H \le q_{u(t)}$$

↑ [Eq. (10.50)]

(for strip foundations) (10.53)

$$q_u = q_{u(b)} + 2\gamma_1 H^2\left(1 + \frac{2D_f}{H}\right)\left(\frac{K_s \tan\phi_1}{B}\right)\lambda'_s - \gamma_1 H \le q_{u(t)}$$

↑ [Eq. (10.51)]

(for square or circular foundations) (10.54)

and

$$\boxed{q_u = q_{u(b)} + \left(1 + \frac{B}{L}\right)\gamma_1 H^2\left(1 + \frac{2D_f}{H}\right)\left(\frac{K_s \tan\phi_1}{B}\right)\lambda'_s - \gamma_1 H \le q_{u(t)}}$$

↑ [Eq. (10.52)]

(for rectangular foundations) (10.55)

where $K_s$ = punching shear coefficient
$\lambda'_s$ = shape factor
$q_{u(b)}$ = ultimate bearing capacity of the bottom soil layer

Rev 1 EDF-5017 105/148

(Ref. 11)

The value of the shape factor $\lambda'_s$ can be taken to be approximately 1. The punching shear coefficient

$$K_s = f(\gamma_1, \gamma_2, N_{\gamma(1)}, N_{\gamma(2)}) \tag{10.56}$$

where $\gamma_2$ = unit weight of the lower layer of sand
$N_{\gamma(2)}$ = bearing capacity factor for the soil friction angle, $\phi_2$

The variation of $K_s$ is shown in Figure 10.22. The term $q_{u(b)}$ in Eqs. (10.53), (10.54), and (10.55) is given by the following relationships:

$$q_{u(b)} = \gamma_1(D_f + H)N_{q(2)} + \frac{1}{2}\gamma_2 BN_{\gamma(2)}$$

(for strip foundations) (10.57)

$$q_{u(b)} = \gamma_1(D_f + H)N_{q(2)} + 0.3\gamma_2 BN_{\gamma(2)}$$

(for circular or square foundations) (10.58)

$$q_{u(b)} = \gamma_1(D_f + H)N_{q(2)} + \frac{1}{2}\left[1 - 0.4\left(\frac{B}{L}\right)\right]\gamma_2 BN_{\gamma(2)}$$

(for rectangular foundations) (10.59)

For a given layered soil, the variation of $q_u$ with $H/B$ will be as shown in Figure 10.23.

### *Foundations on Layered Sand—Loose over Dense*

Figure 10.24 shows a strip foundation supported by a loose sand layer underlain by a dense sand layer. Depending on the magnitude of $H/B$, two types of failure surface can be observed in the soil supporting the foundation. They are as follows:

a. If the thickness of the loose sand layer under the foundation ($H$) is large compared to the width of the foundation ($B$), then the failure surface in the soil would be completely in the weaker soil layer (right half of Figure 10.24). For that case

$$q_u = q_{u(t')} = \gamma_1 D_f N_{q(1)} + \frac{1}{2}\gamma_1 BN_{\gamma(1)}$$

(for strip foundations) (10.60)

$$q_u = q_{u(t')} = \gamma_1 D_f N_{q(1)} + 0.3\gamma_1 BN_{\gamma(1)}$$

(for circular and square foundations) (10.61)

$$q_u = q_{u(t')} = \gamma_1 D_f N_{q(1)} + \frac{1}{2}\left[1 - 0.4\left(\frac{B}{L}\right)\right]\gamma_1 BN_{\gamma(1)}$$

(for rectangular foundations) (10.62)



where $\gamma_1$ = unit weight of upper soil layer
$N_{q(1)}$ and $N_{\gamma(1)}$ = bearing capacity factors with respect to soil friction angle, $\phi_1$

b. When the thickness $H$ is relatively small with respect to the foundation width $B$, the failure surface in soil will pass through the top and the bottom soil layer. This is shown in the left-hand half of Figure 10.24. With this condition (Meyerhof and Hanna, 1978)

$$q_u = q_{u(t')} + (q_{u(b')} - q_{u(t')})\left(1 - \frac{H}{H_f}\right)^2 \tag{10.63}$$

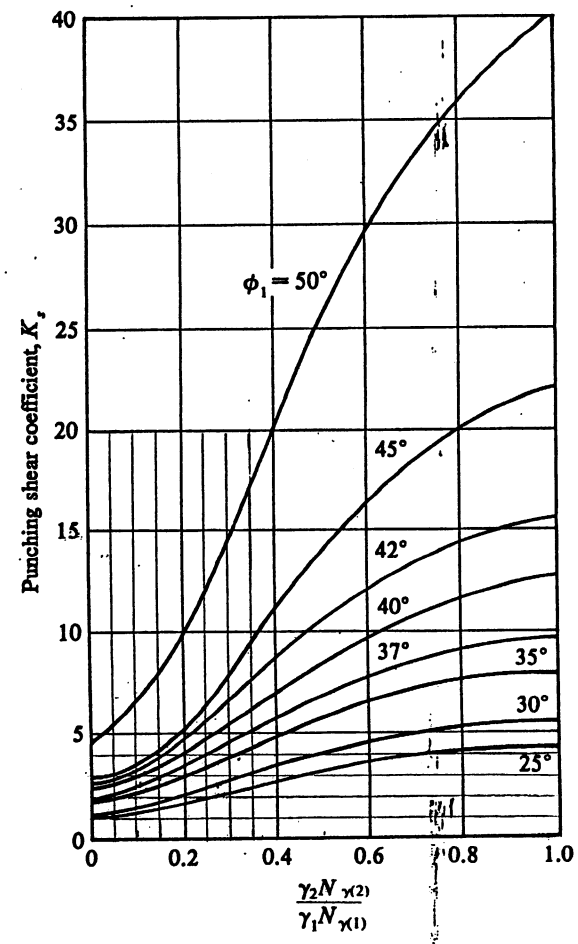


**Figure 10.22** Variation of $K_s$ with $(\gamma_2 N_{\gamma(2)})/(\gamma_1 N_{\gamma(1)})$

EDF-5017 Rev 1 106/148

# Attachment 5

# Tank Seismic Stability

## TANK STABILITY

Although the PC is 0 for this design, tank stability will be evaluated for min. seismic activity, PC-1.

Using Microsoft Excel spreadsheet, pgs 101-103, the tank base shear force is determined using IBC methodology (Ref. 12) as required by AE Stds (Ref. 10).

base shear force = F = 0.162 W

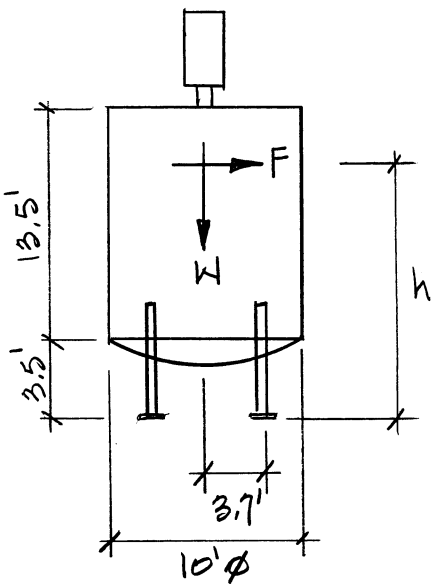


see Attachment 7 for Tank

conservatively assume h = 10'

$M_{OT} = hF = 10(0.162)W = 1.62W$

$M_R = 3.7W$

$SF = \frac{M_R}{M_{OT}} = \frac{3.7W}{1.62W} = 2.3$

tank will not tip over due to seismic forces, with a safety factor of 2.3.

# 2003 IBC SEISMIC DESIGN LOADS

**Project :** **V-Tank Consolidation Tanks at TAN**
**Structure:** **8000 Gallon Vertical Tank on Support Legs**
**Designer :** **R. F. Lippert, P.E.**

Remarks : **PC-1 at TAN On Soil Layer > 10 Ft**

| | | | |
|---|---|---|---|
| NPH Performance Category, PC-1 or PC-2? | PC = | **1** | * |
| INEEL Facility (ANL,CFA,INTEC,NRF,RWMC,TAN,TRA,PBF,Idaho Falls): | Facility = | **TAN** | * |
| Seismic Use Group ("I" for PC-1 or "III" for PC-2 per DOE-STD-1020): | SUG = | **I** | |
| Importance Factor (1.0 for PC-1 or 1.5 for PC-2 per DOE-STD-1020): | I = | **1.0** | |

**Mapped Spectral Accelerations (IBC 1615.1 and DOE-ID AE Standards) :**

| | Mapped Spectral Accelerations (g's) | | | |
|---|---|---|---|---|
| Facility | Latitude | Longitude | Short Periods $S_S$ | 1-Sec Period $S_1$ |
| TAN | 43.847 | 112.707 | 0.405 | 0.148 |

**Site Parameters (IBC 1615.1.2 and DOE-ID AE Standards) :**

Soil layer depth below structure, d = **20.0** ft *

| | Site Class Based On Shear Wave Velocity | | | |
|---|---|---|---|---|
| Facility | On Rock | d < 10 ft | 10 ft < d < 50 ft | 50 ft < d < 80 ft |
| TAN | B | B | C | D |

Site Class = **C**

| Site Coefficient, $F_a$, for Short Periods | | | |
|---|---|---|---|
| Site Class | $S_S = 0.25$ | $S_S = 0.50$ | $S_S = 0.75$ |
| C | 1.2 | 1.2 | 1.1 |

Fa = 1.200

| Site Coefficient, $F_v$, for 1-Second Period | | | |
|---|---|---|---|
| Site Class | $S_1 = 0.1$ | $S_1 = 0.2$ | $S_1 = 0.3$ |
| C | 1.7 | 1.6 | 1.5 |

$F_v$ = 1.652

**Maximum Considered Earthquake Spectral Response Acceleration (IBC 1615.1.2) :**

for short periods, $S_{MS}$ = 0.486 g's
for 1-sec period, $S_{M1}$ = 0.244 g's

**- Design Spectral Response Acceleration, 5% damped (IBC 1615.1.3) :**

for short periods, $S_{DS}$ = **0.324** g's
for 1-sec period, $S_{D1}$ = **0.163** g's

**Design Response Spectrum Curve (IBC 1615.1.4) :**

lowest period at peak acceleration, $T_0$ = 0.101 seconds

greatest period at peak acceleration, $T_S$ = 0.503 seconds

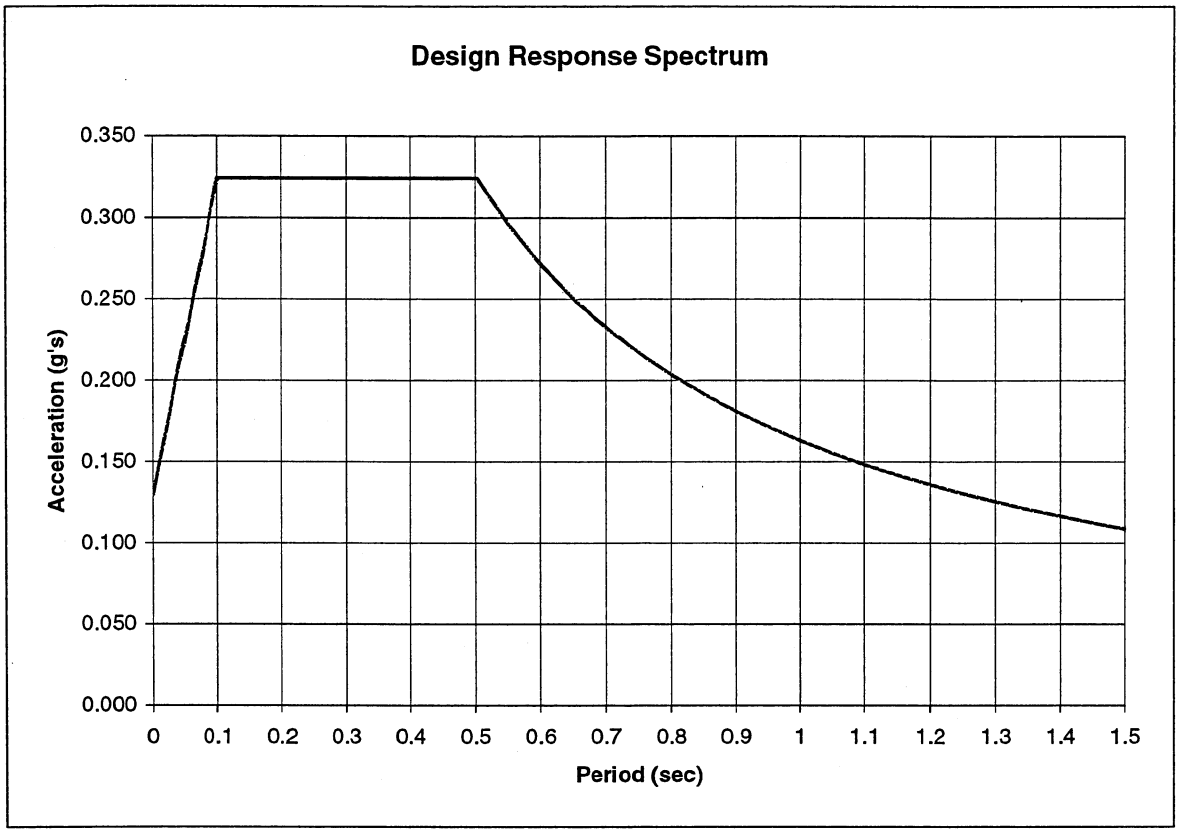


**Seismic Design Category Determination (IBC 1616.3) :**

| Spectral Response Acceleration | Seismic Use Group | Seismic Design Category |
|---|---|---|
| Value of $S_{DS}$ 0.167g<SDS<0.33g | I | B |
| Value of $S_{D1}$ 0.133g<SD1<0.20g | | C |

Seismic Design Category = **C**

## Non-Building Structure -- Equivalent Lateral Force (IBC 1622 & ASCE 9.14)

| | | | |
|---|---|---|---|
| Base Shear Force (ASCE Eq 9.5.5.2-1) : | $V = C_S * W$ | (W = structure operating weight) | |
| Base Shear Force for Rigid Structure, T<0.06 sec (ASCE Eq 9.14.5.2) : | $V = 0.3 * S_{DS} * W * I$ | | |
| seismic response coefficient (ASCE Eq 9.5.5.2.1-1) : | $C_S = S_{DS}/(R/I_E)$ | | |
| $C_S$ need not exceed (ASCE Eq 9.5.5.2.1-2) : | $S_{D1}/(R/I_E)/T$ | | |
| $C_S$ shall not be taken less than (ASCE Eq 9.14.5.1-1) : | $0.014 * S_{DS} * I$ | | |
| bldg fund. period, T, taken as the approx. period (ASCE Eq 9.5.5.3.2-1) : | $Ta = CT * hn^x$ | | |
| importance factor, I = | **1.0** | | |
| height of structure to highest level, $h_n$ = | **17.0** | ft | * |
| response mod. coefficient (from ASCE Table 9.14.5.1.1), R = | **2.0** | | * |
| structure period coeff. (ASCE Table 9.5.5.3.2: 0.035, 0.030 or 0.020), $C_T$ = | **0.020** | | * |
| building period exponent (ASCE Table 9.5.5.3.2: 0.8, 0.9, 0.75), x = | **0.75** | | |
| $T_a$ = | **0.167** | sec | |
| $C_S$ = | 0.162 | | |
| maximum $C_S$ = | 0.487 | | |
| minimum $C_S$ = | 0.045 | | |
| force for rigid structure (if T < 0.06 sec), V = | 0.097 | W | |
| Structure Base Shear Force, **V** = | **0.162** | **W** | |

# Attachment 6

# V-Tank Mockup Platform Analysis

## V-TANK MOCKUP PLATFORM

This attachment presents an analysis of the platform designed by Brian Raivo. The platform will be used for operator access in a mockup for the cleaning of the V-Tanks. The intent of the design is to support 2 to 3 people. See attached sketches.

## LOADS

will assume LL = 40 psf and concentrated load P = 300 lb

but need not consider them acting together

walking area will be metal grating, supported by HSS 6x3x3/16 beams; grating has max. span = 3 ft

1 x 3/16 grating, $w_g$ = 7.2 psf

$w_g$ on intermediate beam = 7.2(3) = 21.6 plf

$w_g$ on perimeter beam = 21.6 / 2 = 10.8 plf

LL on intermediate beam = 40(3) = 120 plf

LL on perimeter beam = 120 / 2 = 60 plf

In addition to the gravity loads, a 250 lb horizontal force was considered in a couple of locations in an effort to account for worker movement on the platform

## ANALYSIS

STAAD.pro (Ref. 5) is used to analyze the structure. See following pages for input & output.

Members are determined adequate if their failure ratio (actual stress to allowable stress) is less than 1.0. The following are the results of the analysis:

Columns & beams -- max. failure ratio = 0.368 in element 27 for Load Case 11

Brace -- max. failure ratio = 1.048 in element 53 for Load Case 11

The failure ratio for the Brace is due to its slenderness ratio exceeding 200. When evaluating the stress in the Brace, its maximum axial compressive stress = 0.25 kips / 1.94 sq in = 0.13 ksi; this is less than its allowable stress of 3.40 ksi (equation E2-2 of Ref 2), so it is adequate (see para. B7 of Ref 2).

Max. horizontal deflection at the top of the platform was calculated to be 0.23 in; this is considered small, so OK.

EDF-5017 Rev 1

114/

NOTES:

1. REMOVE ALL BURRS AND SHARP EDGES.
2. ALL CORNER AND FILLET RADII .03 UNLESS OTHERWISE NOTED.
3. CLEANLINESS PER STD-7022 LEVEL B.

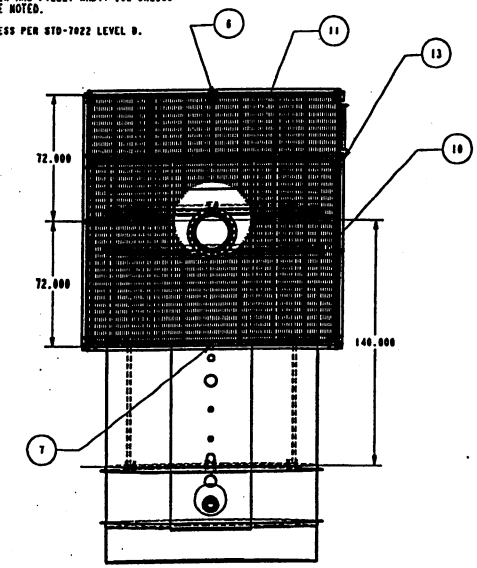


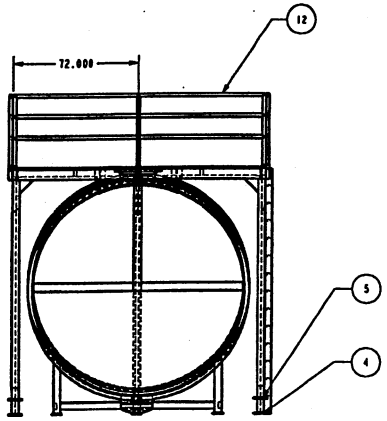


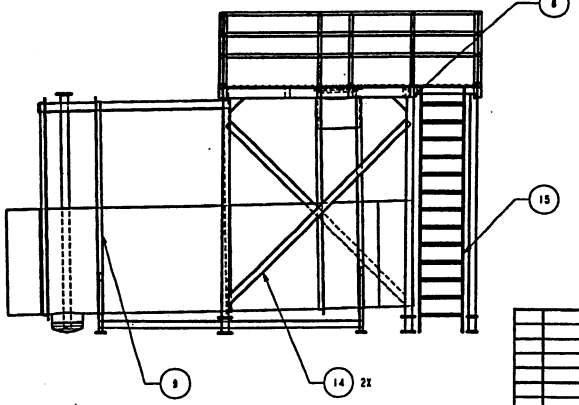


-1 ASSEMBLY

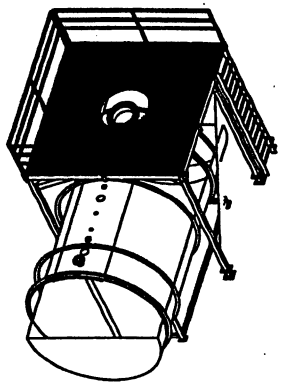

ISOMETRIC VIEW
(SHOWN FOR CLARITY)
SCALE: NONE

| QTY | REQD | SAFETY CAT. | PART OR IDENTIFYING NO. | NOMENCLATURE OR DESCRIPTION | MATERIAL/SPECIFICATION OR VENDOR NAME | ITEM NO. |
|---|---|---|---|---|---|---|
| | 1 | | SKETCH | LADDER | | 15 |
| | 2 | CG | | CROSS BRACE | L 4 X 4 X 1/4 CS ASTM A36 | 14 |
| | 1 | CG | 626289 | Handrail - 9 ft 3 rail 12 ft. Lg | 1-1/4" OD x 0.120 Wall Carbon Steel, ASTM A513 | 13 |
| | 3 | CG | 626288 | HANDRAIL - 12 FT | | 12 |
| | 2 | CG | SKETCH | GRATING 19-W-4X36_CUT | | 11 |
| | 2 | CG | SKETCH | GRATING 19-W-4X36 | | 10 |
| | 1 | CG | 626292 | V1 Tank with Stand Assembly | | 9 |
| | 1 | CG | 626299 | Frame Crossbar Weldment | | 8 |
| | 1 | CG | 626298 | Deck Frame Extension Assembly | | 7 |
| | 1 | CG | 626287 | CATWALK WELDMENT ASSEMBLY 2" x 4" x 3/16" wall | Rectangular Tubing Carbon Steel, ASTM A500B | 6 |
| | 3 | CG | 626301 | Catwalk Support Leg Weldment | | 5 |
| | 3 | CG | SKETCH | Catwalk Support Leg Extension | | 4 |
| | | | | | | 3 |
| | | | | | | 2 |
| | | TBD | -1 | TBD | | 1 |

PARTS LIST

| PART DASH NO. | NEXT ASSY | APPLICATION |
|---|---|---|
| | TBD | |

DIMENSIONS AND TOLERANCES ARE MEASURED BEFORE, DURING AND AFTER PROCESSING. SPECIFICATIONS AND STANDARDS ARE DESIGNATED BY ✓

DIMENSIONS AND TOLERANCES ARE IN INCHES
TOLERANCES .X ± 0.1
DECIMALS .XX ± 0.05
.XXX ± 0.010
FRACTIONS ± 1/8
ANGLES ± 1°
DO NOT SCALE DRAWING

DRAWING NO.

DRAWING S. Bates
DESIGN B Bates
CHECK J.A. LAWRENCE
PROJECT NO. TBD
TYPE CODE
OR DEVELOPMENTAL DRAWINGS
ASS DWG NO. TBD
APPROVING DWG TBD

INEEL
Idaho National Engineering & Environmental Laboratory
BECHTEL BWXT IDAHO, LLC

TBD
V Tank Mockup
TBD
TBD

| SIZE | CODE IDNT. | FOR USE CODE | | | | DWG. | REV |
|---|---|---|---|---|---|---|---|
| | | TBD | TBD | TBD | TBD | 626284 | 0 |
| D | 01MF3 | | | | | SHEET 1 OF 1 | |

SCALE: 3/100

NAME:LAWRIA OBJECT:V1_TANK_MOCKUP_ASSY DATE:21-Apr-04 08:16:20

EDF-5017 Rev 1

115/

NOTES:

1. REMOVE ALL BURRS AND SHARP EDGES.
2. ALL CORNER AND FILLET RADII .03 UNLESS OTHERWISE NOTED.
3. CLEANLINESS PER STD-7022 LEVEL D.

| REV | DESCRIPTIONS | EFFECTIVE DATE |
|---|---|---|
| | REVISIONS | |

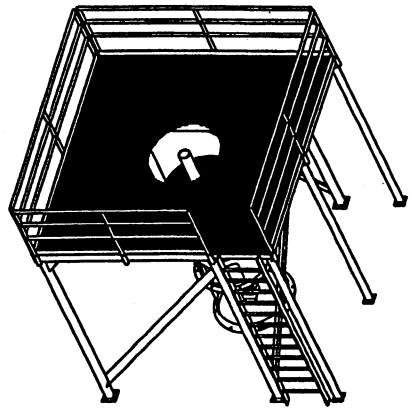

ISOMETRIC VIEW
(SHOWN FOR CLARITY)
SCALE: NONE

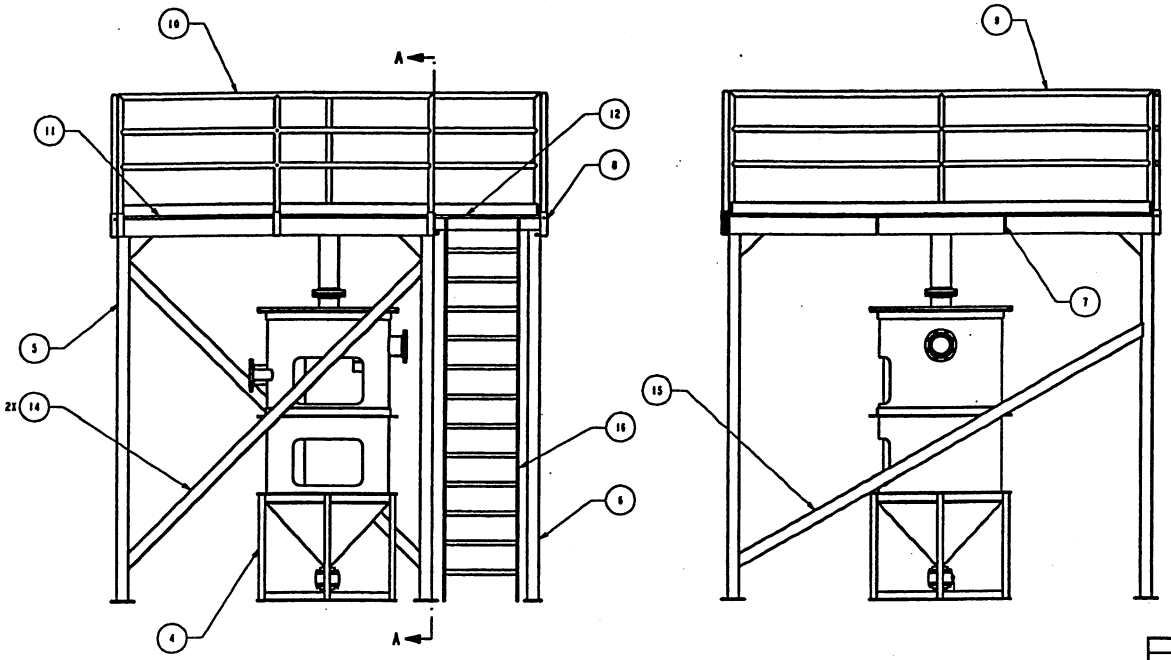


-1 ASSEMBLY

| QTY | REQD | SAFETY CAT. | PART OR IDENTIFYING NO. | NOMENCLATURE OR DESCRIPTION | MATERIAL/SPECIFICATION OR VENDOR NAME | ITEM NO. |
|---|---|---|---|---|---|---|
| | 1 | | SKETCH | LADDER | | 16 |
| | 1 | CG | | CROSS BRACE LONG | L 4 X 4 X 1/4 CS ASTM A36 | 15 |
| | 2 | CG | | CROSS BRACE | L 4 X 4 X 1/4 CS ASTM A36 | 14 |
| | 1 | | SKETCH | TBD | | 13 |
| | 2 | CG | 626285 | Bar Grating 19-W-4 1"x3/16" Bearing 1/4" | 36" wide 19-W-4, 7.35 lb/sq2 Carbon Steel, ASTM A36 | 12 |
| | 2 | CG | 626294 | Bar Grating 19-W-4 1"x3/16" Bearing 1/4" cross | 36" wide 19-W-4, 7.35 lb/f12 Carbon Steel, ASTM A36 | 11 |
| | 1 | CG | 626289 | Handrail - 9 ft 3 rail 12 ft. Lg | 1-1/4" OD x 0.120 Wall Carbon Steel, ASTM A513 | 10 |
| | 3 | CG | 626288 | HANDRAIL - 12 FT | | 9 |
| | 1 | CG | 626287 | CATWALK WELDMENT ASSEMBLY 2" x 4" x 3/16" wall | Rectangular Tubing Carbon Steel, ASTM A500B | 8 |
| | 1 | CG | 626299 | Frame Crossbar Weldment | | 7 |
| | 3 | CG | 626301 | Catwalk Support Leg Weldment | | 6 |
| | 1 | CG | 626286 | V9 Tank Mockup Deck Frame Weldment | | 5 |
| | 1 | CG | 626297 | V9 Tank Mockup w/Cover Assembly | | 4 |
| | 4 | | SKETCH | KICKPLATE | PLATE, 1/4 THK CS ASTM A36 | 1 |
| | | | | | | 3 |
| | | | | | | 2 |
| | | CG | -1 | V9 Tank Mockup Assembly | | 1 |

PARTS LIST

| | |
|---|---|
| PART DASH NO. | TBD |
| NEXT ASSY | |
| APPLICATION | |

DIMENSIONS AND DETAILS ARE SHOWN ON DRAWING UNLESS OTHERWISE SPECIFIED
SURFACE ROUGHNESS
DIMENSIONS AND TOLERANCES ARE IN INCHES
TOLERANCES FRACTIONS ±1/32 DECIMALS .X ±0.1 .XX ±0.03 .XXX ±0.005
ANGLES ±1°
DO NOT SCALE DRAWING

ENGINEERING NO.
DESIGNED S. Bates
DRAWN G. Bates
CHECKED J.A. LAWRENCE
PROJECT NO. TBD
SPEC NUMBER
FOR INTERDEPARTMENTAL CLEARANCE
DRG DAR NO. TBD
EFFECTIVE DATE: TBD

INEEL
Idaho National Engineering & Environmental Laboratory
BATTELLE ENERGY ALLIANCE, LLC

TBD
V Tanks Mockup
V9 Tank Mockup Assembly

| SIZE | CAGE CODE | DATE | | | | DWG NO. | REV |
|---|---|---|---|---|---|---|---|
| D | 01MF3 | DRN | CHK | APP | DATE | 626285 | 0 |
| | | TBD | TBD | TBD | TBD | | |
| SCALE: 1/20 | | | | | | SHEET 1 OF 1 | |

NAME:LAWRJA OBJECT:V9_TANK_MOCKUP_ASSY DATE:21-Apr-04 08:07:04

EDF-5017 Rev 1
116/

NOTES:

1. REMOVE ALL BURRS AND SHARP EDGES.
2. ALL CORNER AND FILLET RADII .03 UNLESS OTHERWISE NOTED.
3. CLEANLINESS PER STD-7022 LEVEL B.

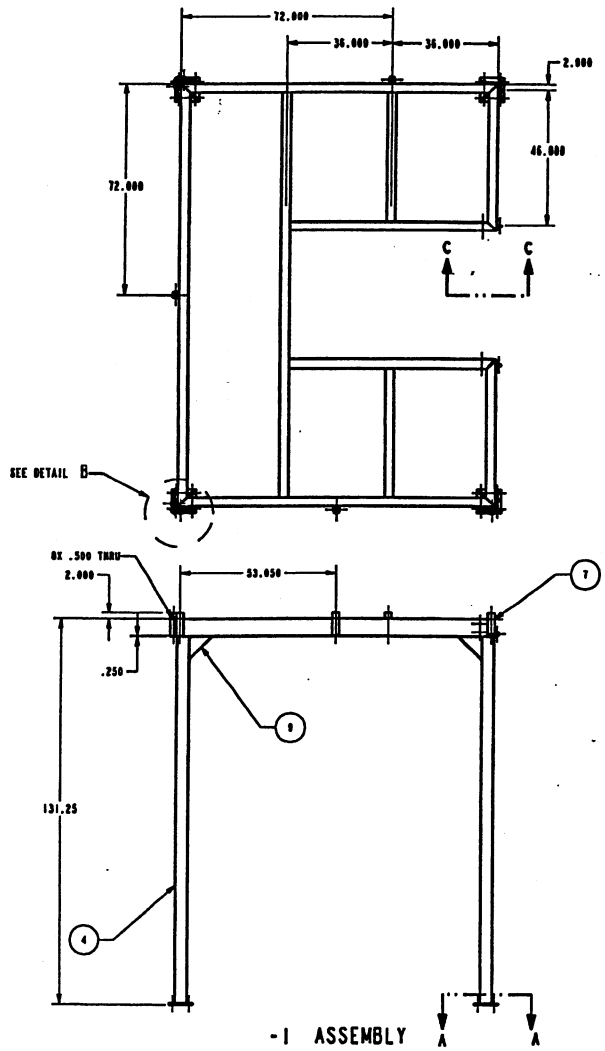


-1 ASSEMBLY

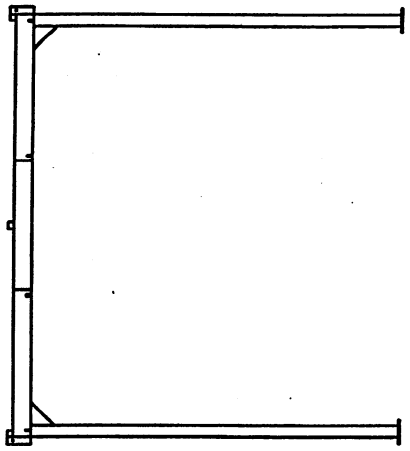

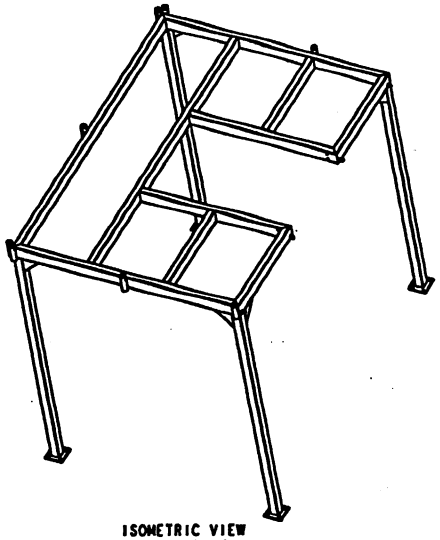

ISOMETRIC VIEW
(SHOWN FOR CLARITY)
SCALE: NONE

| REV | DESCRIPTIONS | EFFECTIVE DATE |
|---|---|---|

| QTY | REQD | SAFETY CAT. | PART OR IDENTIFYING NO. | NOMENCLATURE OR DESCRIPTION | MATERIAL/SPECIFICATION OR VENDOR NAME | ITEM NO. |
|---|---|---|---|---|---|---|
| | 1 | | SKETCH | TBD | | 10 |
| | 8 | CG | SKETCH | Gusset 3/8" | Plate Carbon Steel, ASTM A36 | 9 |
| | 4 | CG | SKETCH | SUPPORT LUG | PLATE, 1/2 THK CS ASTM A36 | 8 |
| | 8 | CG | SKETCH | HANDRAIL SUPPORT TUBE | TUBING, 2 3/8 OD X .187 WALL CS ASTM A519 | 7 |
| | 4 | CG | SKETCH | Baseplate 1/2" | Plate Carbon Steel, ASTM A36 | 6 |
| | 4 | CG | SKETCH | Support Leg 4" x 4" x 3/16" wall | Square Tubing Carbon Steel, ASTM A500B | 4 |
| | 10 | CG | SKETCH | Rectangular Tubing 3" x 6" x 3/16" Wall | Rectangular Tubing Carbon Steel, ASTM A500B | 1 |
| | | | | | | 3 |
| | | | | | | 2 |
| | | CG | -1 | V9 Tank Mockup Deck Frame Weldment | | 1 |

PARTS LIST

| PART DASH NO. | NEXT ASSY | APPLICATION |
|---|---|---|
| | TBD | |

DIMENSIONS AND TOLERANCES ARE INCHES UNLESS OTHERWISE SPECIFIED
SURFACE ROUGHNESS
DIMENSIONS AND TOLERANCES ARE IN INCHES
TOLERANCES .X ± 0.1 .XX ± 0.03 .XXX ± 0.010
FRACTIONS ± 1/32
ANGLES ± 2°
DO NOT SCALE DRAWING

DRAWN: S. Bates
DESIGN: B Baiva
APPROVED: J.A. LAWRENCE
PROJECT NO.: TBD
SPEC CODE:
SUBCONTRACTOR DRAWINGS
SUBC DWG NO.: TBD
SUBCONTRACT NO.:
SUBCONTRACTOR: TBD

INEEL
BATTELLE ENERGY ALLIANCE, LLC

TBD
V Tanks Mockup
V9 Tank Mockup Deck Frame Weldment

| SIZE | CODE IDENT | SHEET SIZE | | | DWG | REV |
|---|---|---|---|---|---|---|
| D | 01MF3 | 36 | 24 | 1 | 626286 | 0 |
| | | TBD | TBD | TBD/TBD | SHEET 1 OF 2 | |

DATE: 01

NAME:LAWRIA OBJECT:V9_TANK_FRAME_WLDMNT_ASSY_1 DATE:24-Mar-04 10:28:04

EDF-5017
Rev 1
117/

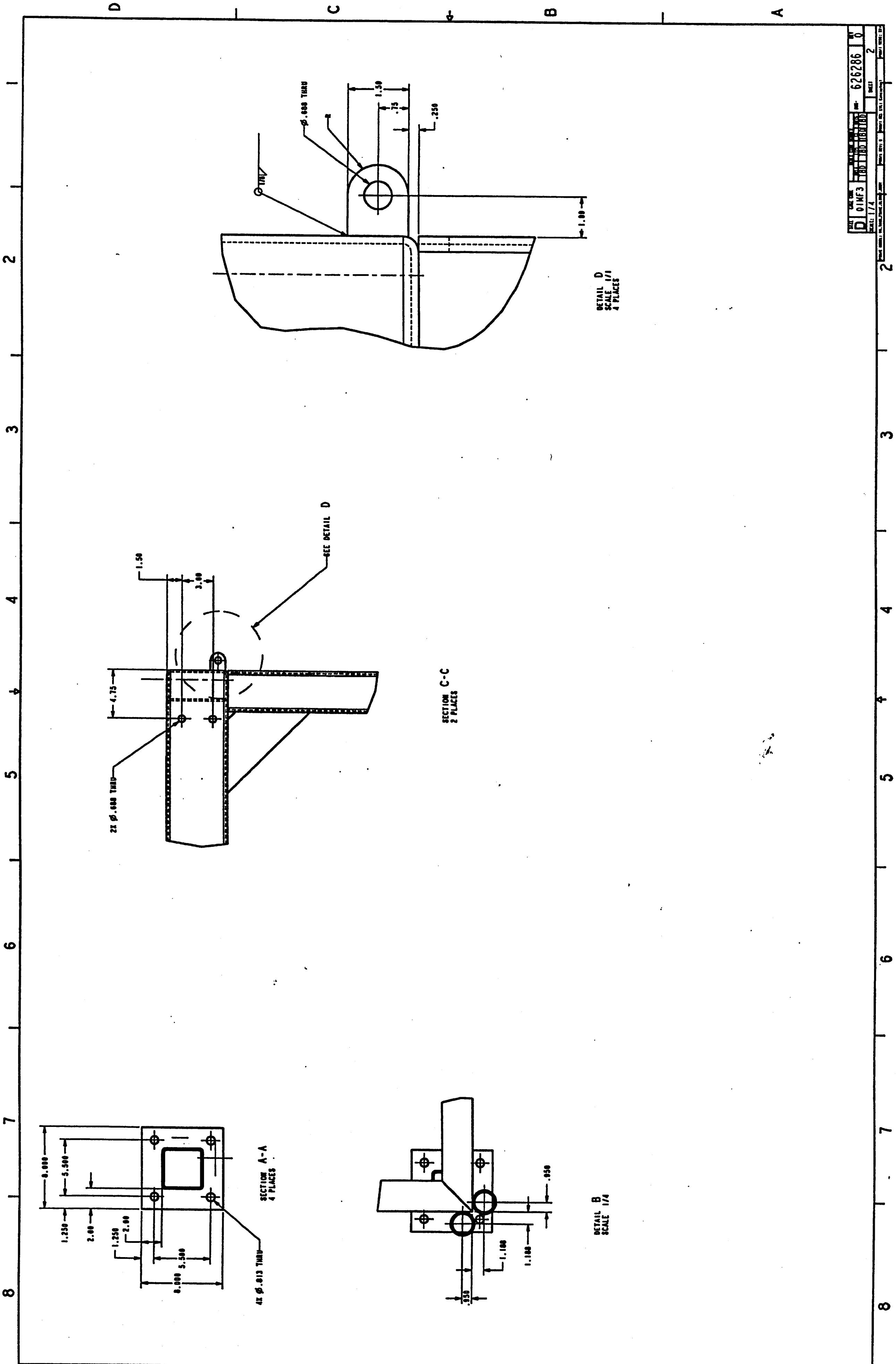

EDF-5017 Rev 1 119

NOTES:

1. REMOVE ALL BURRS AND SHARP EDGES.
2. ALL CORNER AND FILLET RADII .03 UNLESS OTHERWISE NOTED.
3. CLEANLINESS PER STD-7022 LEVEL D.

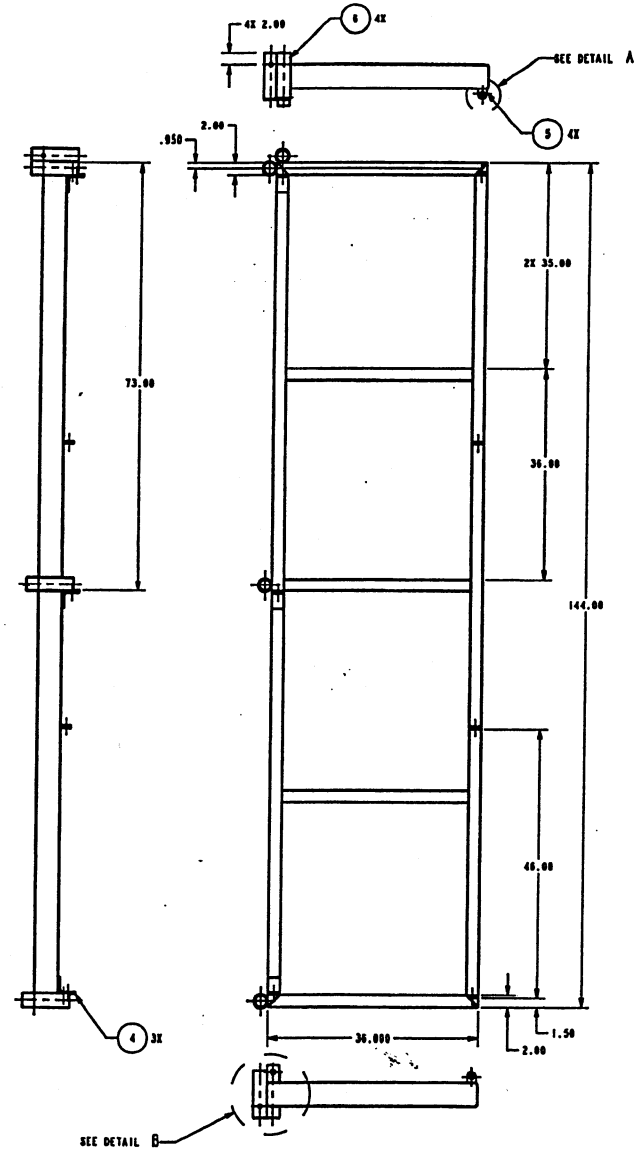


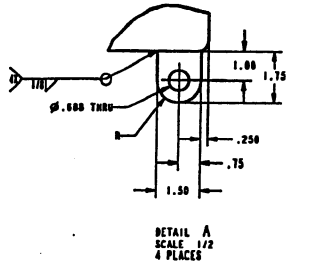


DETAIL A
SCALE 1/2
4 PLACES

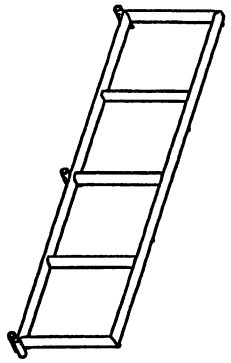

ISOMETRIC VIEW
(SHOWN FOR CLARITY)
SCALE: NONE

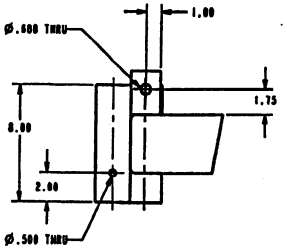


DETAIL B
SCALE 1/4

-1 ASSEMBLY

| REV | DESCRIPTIONS | EFFECTIVE DATE |
|---|---|---|

REVISIONS

| QTY | REQD | SAFETY CAT. | PART OR IDENTIFYING NO. | NOMENCLATURE OR DESCRIPTION | MATERIAL/SPECIFICATION OR VENDOR NAME | ITEM NO. |
|---|---|---|---|---|---|---|
| | 4 | CG | SKETCH | HANDRAIL SUPPORT TUBE | TUBING, 2 3/8 OD X .187 WALL CS ASTM A519 | 6 |
| | 4 | CG | SKETCH | SUPPORT LUG | PLATE, 1/2 THK CS ASTM A36 | 5 |
| | 3 | CG | SKETCH | SUPPORT ANGLE | L, 3 X 3 X 3/8 CS ASTM A36 | 4 |
| | 7 | CG | SKETCH | RECTANGULAR TUBING | TUBING, 2 X 4 X 3/16 WALL CS ASTM A500B | 1 |
| | | | | | | 3 |
| | | | | | | 2 |
| | | CG | -1 | CATWALK WELDMENT ASSEMBLY | | 1 |

PARTS LIST

| PART DASH NO. | NEXT ASSY | APPLICATION |
|---|---|---|
| | | TBD |

DIMENSIONS AND TOLERANCES ARE MEASURED BEFORE CHANGES UNLESS OTHERWISE SPECIFIED

DIMENSIONS ARE IN INCHES

TOLERANCES .X ± 0.1 DECIMALS .XX ± 0.02 .XXX ± 0.005

FRACTIONS ± 1/8 ANGULAR ± 2°

DO NOT SCALE DRAWING

DRAWING NO.

DESIGNED S. BATES
DRAWN S. BAIVO
CHECKED J.A. LAWRENCE
PROJECT NO. TBD
DATE ISSUED
DATE CHANGED
DATE CHECKED
DATE APPROVED
DATE SUB. NO. TBD
APPROVING SUBJ. TBD

INEEL
Bechtel BWXT Idaho, LLC

V TANKS MOCKUP
CATWALK WELDMENT ASSEMBLY

SIZE D | CODE IDENT. 01MF3 | SHEET SIZE: WIDTH TBD | LENGTH TBD | HEIGHT TBD | DWG. 626287 | REV 0

SCALE: 1/10 | SHEET 1 OF 1

NAME:LAWRJA OBJECT:V9_TANK_CATWALK_WLDMNT_ASSY DATE:24-Mar-04 10:25:28

EDF-5017 Rev 1

119/

NOTES:

1. REMOVE ALL BURRS AND SHARP EDGES.
2. ALL CORNER AND FILLET RADII .03 UNLESS OTHERWISE NOTED.
3. CLEANLINESS PER STD-7022 LEVEL D.

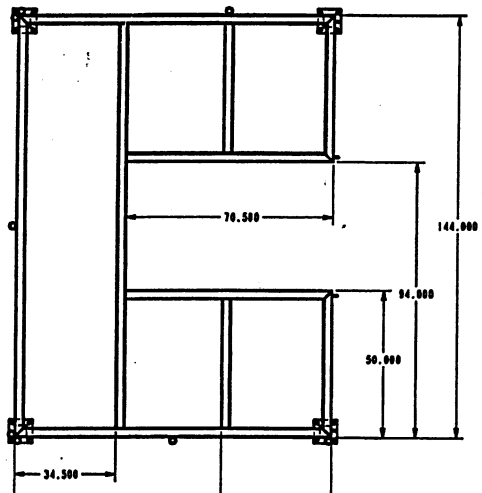


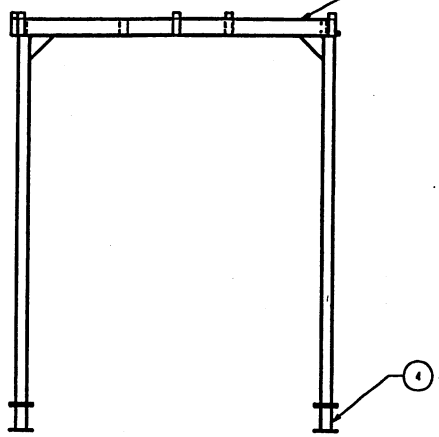


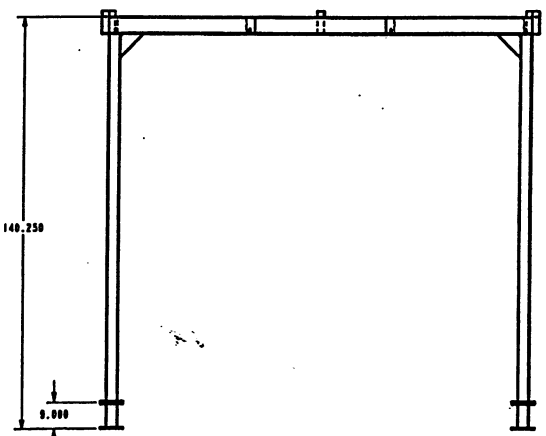


-1 ASSEMBLY

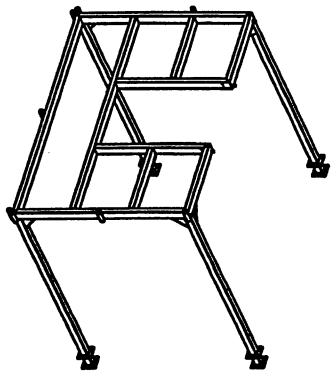

ISOMETRIC VIEW
(SHOWN FOR CLARITY)
SCALE: NONE

REVISIONS

| REV | DESCRIPTIONS | EFFECTIVE DATE |
|---|---|---|

PARTS LIST

| QTY | REQD | SAFETY CAT. | PART OR IDENTIFYING NO. | NOMENCLATURE OR DESCRIPTION | MATERIAL/SPECIFICATION OR VENDOR NAME | ITEM NO. |
|---|---|---|---|---|---|---|
| | 1 | CG | 626286 | V9 Tank Mockup Deck Frame Weldment | | 5 |
| | 4 | CG | SKETCH | Deck Frame Leg Extension | | 4 |
| | | | | | | 3 |
| | | | | | | 2 |
| | -1 | CG | -1 | Deck Frame Extension Assembly | | 1 |

| PART DASH NO. | NEXT ASSY | APPLICATION |
|---|---|---|
| | TBD | |

DIMENSIONS AND SYMBOLS ARE ENGLISH EXCEPT WHERE OTHERWISE SPECIFIED
DIMENSIONS AND TOLERANCES ARE IN INCHES
TOLERANCES .X ± 0.1 DECIMALS .XX ± 0.03 .XXX ± 0.010
FRACTIONS ± 1/16 ANGLES ± 1°
AS SEE SCALE DRAWING

DRAWN BY: S. Boles
CHECKED: B Boles
ISSUED: LAWRENCE
PROJECT NO.: TBD
SPEC NONE
TBD
DATE: TBD

INEEL
Idaho National Engineering & Environmental Laboratory
BATTELLE ENERGY ALLIANCE, LLC

TBD
V Tanks Mockup
Deck Frame Extension Assembly

SIZE D | CODE IDENT 01MF3 | SCALE 1/20 | DWG NO. 626290 | REV 0 | SHEET 1 OF 1

NAME:LAWRIA OBJECT:V1_DECK_EXTENSION_ASSY DATE:24-Mar-04 10:46:38

EDF-
5017
Rev 1
120

NOTES:

1. REMOVE ALL BURRS AND SHARP EDGES.
2. ALL CORNER AND FILLET RADII .03 UNLESS OTHERWISE NOTED.
3. CLEANLINESS PER STD-7022 LEVEL D.

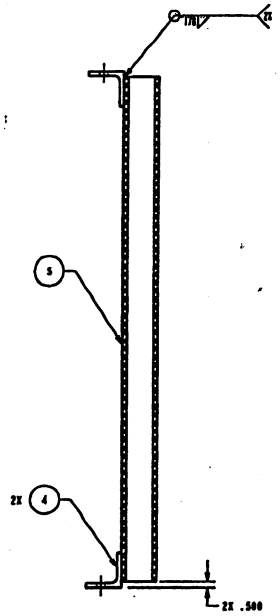


-1 ASSEMBLY

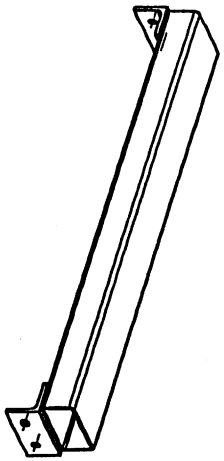

ISOMETRIC VIEW
(SHOWN FOR CLARITY)
SCALE: NONE

| REV | DESCRIPTIONS | EFFECTIVE DATE |
|---|---|---|

REVISIONS

| QTY | REQD | SAFETY CAT. | PART OR IDENTIFYING NO. | NOMENCLATURE OR DESCRIPTION | MATERIAL/SPECIFICATION OR VENDOR NAME | ITEM NO. |
|---|---|---|---|---|---|---|
| | 1 | CG | SKETCH | Rectangular Tubing 3" x 6" x 3/16" Wall | Rectangular Tubing Carbon Steel, ASTM A500B | 5 |
| | 2 | CG | SKETCH | Support Angle 3" x 3" x 3/8" | Angle Carbon Steel, ASTM A36 | 4 |
| | | | | | | 3 |
| | | | | | | 2 |
| | | CG | -1 | Frame Crossbar Weldment | | 1 |

PARTS LIST

| PART DASH NO. | NEXT ASSY |
|---|---|
| | TBD |

APPLICATION

DIMENSIONS AND TOLERANCES ARE AS SHOWN
TOLERANCES .X ± 0.1
DECIMALS .XX ± 0.03
.XXX ± 0.010
FRACTIONS ± 1/32
ANGLES ± 1°
DO NOT SCALE DRAWING

DRAWN S. Bates
DESIGN S Bates
CHECK J.A. LAWRENCE
PROJECT NO. TBD
DOC TYPE
PRE-DEVELOPMENTAL DRAWING
SOC DOC NO. TBD
DRAWING DATE TBD

INEEL
Bechtel BWXT Idaho, LLC

V Tanks Mockup
Frame Crossbar Weldment

| SIZE | CODE IDENT | SCALE | DWG NO. | REV |
|---|---|---|---|---|
| D | 01MF3 | 1/5 | 626299 | 0 |

SHEET 1 OF 1

NAME:LAWRJA OBJECT:V9_TANK_FRAME_CROSSBAR_WELDMNT DATE:24-Mar-04 10:23:41

EDF-5017 Rev 1
121

NOTES:

1. REMOVE ALL BURRS AND SHARP EDGES.
2. ALL CORNER AND FILLET RADII .03 UNLESS OTHERWISE NOTED.
3. CLEANLINESS PER STD-7022 LEVEL D.

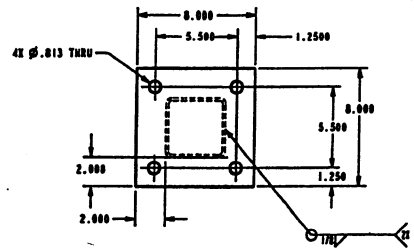


SECTION A-A
SCALE 1/4

ISOMETRIC VIEW
(SHOWN FOR CLARITY)
SCALE: NONE

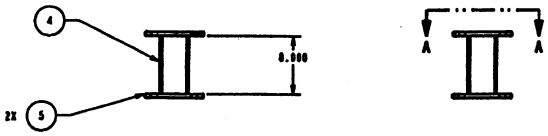


-1 ASSEMBLY

| REV | DESCRIPTIONS | EFFECTIVE DATE |
|---|---|---|

REVISIONS

| QTY | REQD | SAFETY CAT. | PART OR IDENTIFYING NO. | NOMENCLATURE OR DESCRIPTION | MATERIAL/SPECIFICATION OR VENDOR NAME | ITEM NO. |
|---|---|---|---|---|---|---|
| | 2 | CG | SKETCH | Baseplate 1/2" | Plate Carbon Steel, ASTM A36 | 5 |
| | 1 | CG | SKETCH | Leg Extension 4.0" x 4.0" x 3/16" Wall | Mechanical Tubing Carbon Steel, ASTM A500 | 4 |
| | | | | | | 3 |
| | | | | | | 2 |
| | | CG | -1 | Deck Frame Leg Extension | | 1 |

PARTS LIST

| PART BASE NO. | NEXT ASSY | APPLICATION |
|---|---|---|
| | TBD | |

DIMENSIONS AND SYMBOLOGY ARE PATTERN DRAWING STANDARD UNLESS OTHERWISE SPECIFIED

DIMENSIONS AND TOLERANCES ARE IN INCHES

TOLERANCES .X ± 0.1
.XX ± 0.05
.XXX ± 0.005
FRACTIONS ± 1/8
ANGLES ± 1°
DO NOT SCALE DRAWING

PROJECT NO.
DESIGNED S. Hales
DRAWN S. Hales
CHECKED J.A. LAWRENCE
PROJECT NO. TBD
SPEC NOTE
FOR INTERNATIONAL SHIPMENT
SEE DWG NO. TBD
SYMBOLIC DWG TBD

INEEL
BECHTEL BWXT IDAHO, LLC

TBD
V Tanks Mockup
Deck Frame Leg Extension

| SIZE | CODE IDENT | SYSTEM | SUBSYSTEM | UNIT | SEQ | DWG NO. | REV |
|---|---|---|---|---|---|---|---|
| D | 01MF3 | TBD | TBD | TBD | TBD | 626300 | 0 |

SCALE 1/8 SHEET 1 OF 1

NAME:LAWRJA OBJECT:V1_DECK_LEG_EXTENSION_WLDMNT DATE:24-Mar-04 10:48:43

EDF-5017 Rev 1

122/

NOTES:

1. REMOVE ALL BURRS AND SHARP EDGES.
2. ALL CORNER AND FILLET RADII .03 UNLESS OTHERWISE NOTED.
3. CLEANLINESS PER STD-7022 LEVEL D.

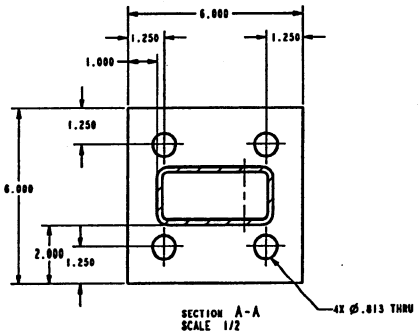


SECTION A-A
SCALE 1/2

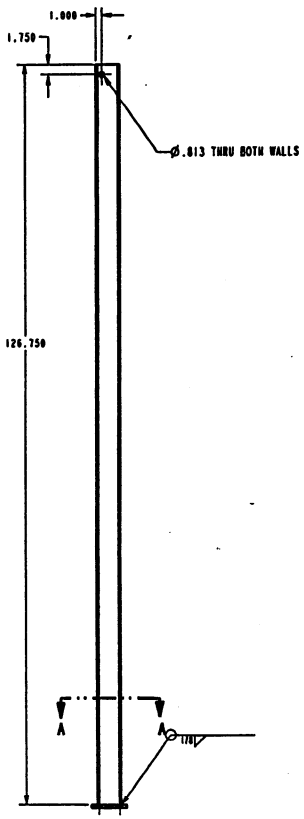


-1 ASSEMBLY

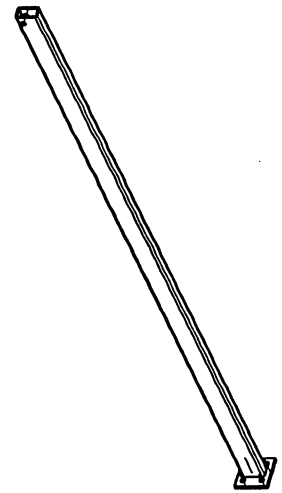

ISOMETRIC VIEW
(SHOWN FOR CLARITY)
SCALE: NONE

| REV | DESCRIPTIONS | EFFECTIVE DATE |
|---|---|---|

REVISIONS

| QTY | REQD | SAFETY CAT. | PART OR IDENTIFYING NO. | NOMENCLATURE OR DESCRIPTION | MATERIAL/SPECIFICATION OR VENDOR NAME | ITEM NO. |
|---|---|---|---|---|---|---|
| | 1 | CG | SKETCH | Support Tube 2" x 4" x 3/16" wall | Rectangular Tube Carbon Steel, ASTM A500B | 2 |
| | 1 | CG | SKETCH | Baseplate 1/2" | Plate Carbon Steel, ASTM A36 | 1 |
| | | | | | | 3 |
| | | | | | | 2 |
| | | CG | -1 | Catwalk Support Leg Weldment | | 1 |

PARTS LIST

| PART DASH NO. | NEXT ASSY APPLICATION |
|---|---|
| | TBD |

DIMENSIONS AND DIMENSIONS ARE MEASURED MATERIAL DIMENSIONS UNLESS OTHERWISE SPECIFIED SURFACE ROUGHNESS 125

DIMENSIONS AND TOLERANCES ARE IN INCHES

TOLERANCES .X ± 0.1 DECIMALS .XX ± 0.01 .XXX ± 0.005

FRACTIONS ± 1/32 ANGLES ± 1°

DO NOT SCALE DRAWING

DOCUMENT NO.

| | |
|---|---|
| DRAWN BY | S. Bates |
| DESIGN | S Bates |
| APPR | J.A. LAWRENCE |
| PROJECT NO. | TBD |
| SPEC CODE | |
| FOR INTERCHANGEABLE SUBASSEMBLY | |
| SUB DWG NO. | TBD |
| EFFECTIVE DATE: | TBD |

INEEL
Idaho National Engineering & Environmental Laboratory
BECHTEL BWXT IDAHO, LLC

TBD
V Tanks Mockup
Catwalk Support Leg Weldment

| SIZE | CODE IDENT | PARTS CODE SHEET | | | | DWG. | REV |
|---|---|---|---|---|---|---|---|
| | | PART | REV | SH | REV | | |
| D | 01MF3 | TBD | TBD | TBD | TBD | 626301 | 0 |

SCALE: 1/10 SHEET 1 OF 1

DRAWING NUMBER: 626301_CAT_SUP_WLDMT_ASSY PROJECT REV: 0 PROJECT NOTE: Conceptual DRAWING SIZE: D

NAME:LAWRJA OBJECT:V9_TANK_CAT_SUP_WLDMNT_ASSY DATE:19-Apr-04 09:07:24

```
STAAD SPACE V-TANK MOCKUP DECK FRAME
START JOB INFORMATION
JOB NAME V-TANK MOCKUP PLATFORM
JOB NO EDF-5017
ENGINEER NAME R LIPPERT
ENGINEER DATE 12-Mar-04
END JOB INFORMATION
INPUT WIDTH 79
UNIT INCHES POUND
JOINT COORDINATES
1 0 0 0; 2 144 0 0; 3 0 0 108; 4 144 0 108; 5
0 140 0; 6 144 140 0;
7 0 140 108; 8 144 140 108; 9 0 140 36; 10 0
140 72; 11 144 140 36;
12 144 140 72; 13 48 140 36; 14 96 140 36; 15
48 140 108; 16 96 140 108;
17 48 140 72; 18 96 140 72; 19 0 140 110.5; 20
144 140 110.5; 21 0 140 146.5;
22 144 140 146.5; 23 36 140 110.5; 24 72 140
110.5; 25 108 140 110.5;
26 36 140 146.5; 27 72 140 146.5; 28 108 140
146.5; 29 0 0 146.5;
30 144 0 146.5; 31 72 0 146.5; 32 48 140
110.5; 33 96 140 110.5;
34 0 21.4599 0; 35 0 21.4599 108; 36 0 127.737
108; 37 144 21.4599 108;
38 144 105.255 108; 39 144 127.737 0;
MEMBER INCIDENCES
1 1 34; 2 2 39; 3 3 35; 4 4 37; 5 5 6; 6 5 9;
7 6 11; 8 9 10; 9 10 7; 10 11 12;
11 12 8; 12 9 13; 13 13 14; 14 14 11; 15 13
17; 16 7 15; 17 14 18; 18 8 16;
19 17 15; 20 10 17; 21 18 16; 22 12 18; 23 15
16; 24 19 23; 25 21 26; 26 23 32;
27 24 33; 28 25 20; 29 19 21; 30 26 27; 31 23
26; 32 27 28; 33 24 27; 34 28 22;
35 25 28; 36 20 22; 37 29 21; 38 31 27; 39 30
22; 40 7 19; 41 32 24; 42 15 32;
43 33 25; 44 16 33; 45 8 20; 46 34 5; 47 35
36; 48 36 7; 49 37 38; 50 38 8;
51 39 6; 52 34 36; 53 35 38; 54 37 39;
START GROUP DEFINITION
MEMBER
_COL 1 TO 4 46 TO 51
_BM 5 TO 22
END GROUP DEFINITION
DEFINE MATERIAL START
ISOTROPIC STEEL
E 2.9e+007
POISSON 0.3
DENSITY 0.283
ALPHA 6.5e-006
DAMP 0.03
END DEFINE MATERIAL
CONSTANTS
BETA 90 MEMB 37 TO 39
BETA 315 MEMB 52 TO 54
MATERIAL STEEL MEMB 1 TO 54
MEMBER PROPERTY AMERICAN
1 TO 4 46 TO 51 TABLE ST TUB40403
5 TO 23 TABLE ST TUB60303
24 TO 39 41 43 TABLE ST TUB40203
MEMBER PROPERTY AMERICAN
40 42 44 -
45 PRIS AX 100 AY 100 AZ 100 IX 10000 IY 10000
IZ 10000 YD 1 ZD 1 YB 1 ZB 1
52 TO 54 TABLE ST L40404
MEMBER OFFSET
46 48 50 51 END 0 -3 0
37 TO 39 END 0 -1 0
24 TO 36 41 43 START 0 1 0
24 TO 36 41 43 END 0 1 0
1 END 0 -0.459854 0
46 START 0 -0.459854 0
3 END 0 -0.459854 0
47 START 0 -0.459854 0
47 END 0 -2.73723 0
48 START 0 -2.73723 0
4 END 0 -0.459854 0
49 START 0 -0.459854 0
49 END 0 -2.25547 0
50 START 0 -2.25547 0
2 END 0 -2.73723 0
51 START 0 -2.73723 0
MEMBER RELEASE
23 START MY MZ
23 37 TO 40 42 44 45 END MY MZ
52 START MY MZ
52 END MY MZ
53 START MY MZ
53 END MY MZ
54 START MY MZ
54 END MY MZ
SUPPORTS
1 TO 4 29 TO 31 PINNED
LOAD 1 DEAD LOAD
SELFWEIGHT Y -1
UNIT FEET POUND
MEMBER LOAD
12 TO 14 16 18 20 22 23 UNI GY -22
5 25 30 32 34 UNI GY -11
LOAD 2 UNIFORM LL
MEMBER LOAD
12 TO 14 16 18 20 22 23 UNI GY -120
5 25 30 32 34 UNI GY -60
UNIT INCHES POUND
LOAD 3 CONCEN LL1
MEMBER LOAD
13 CON GY -300
LOAD 4 CONCEN LL2
MEMBER LOAD
22 CON GY -300
LOAD 5 CONCEN LL3
MEMBER LOAD
20 CON GY -300
LOAD 6 CONCEN LL4
MEMBER LOAD
23 CON GY -300
LOAD 7 CONCEN LL5
MEMBER LOAD
33 CON GY -300
LOAD 8 LATLOAD1
JOINT LOAD
14 FX -250
LOAD 9 LATLOAD2
JOINT LOAD
27 FX -250
LOAD 10 LATLOAD3
JOINT LOAD
10 FZ -250
LOAD COMB 11 DL+ULL+LAT1
1 1.0 2 1.0 8 1.0
LOAD COMB 12 DL+ULL+LAT2
1 1.0 2 1.0 9 1.0
LOAD COMB 13 DL+ULL+LAT3
1 1.0 2 1.0 10 1.0
LOAD COMB 14 DL+LL1+LL2
1 1.0 3 1.0 4 1.0
LOAD COMB 15 DL+LL2+LL3
1 1.0 4 1.0 5 1.0
LOAD COMB 16 DL+LL2+LL4
1 1.0 4 1.0 6 1.0
LOAD COMB 17 DL+LL5
1 1.0 7 1.0
UNIT FEET POUND
PERFORM ANALYSIS PRINT ALL
CHANGE
LOAD LIST 1 11 TO 17
UNIT INCHES POUND
PARAMETER
CODE AISC
FYLD 46000 MEMB 1 TO 39 41 43 46 TO 51
UNT 36 MEMB 26 27 41 43
CHECK CODE MEMB 1 TO 39 41 43 46 TO 54
FINISH
```

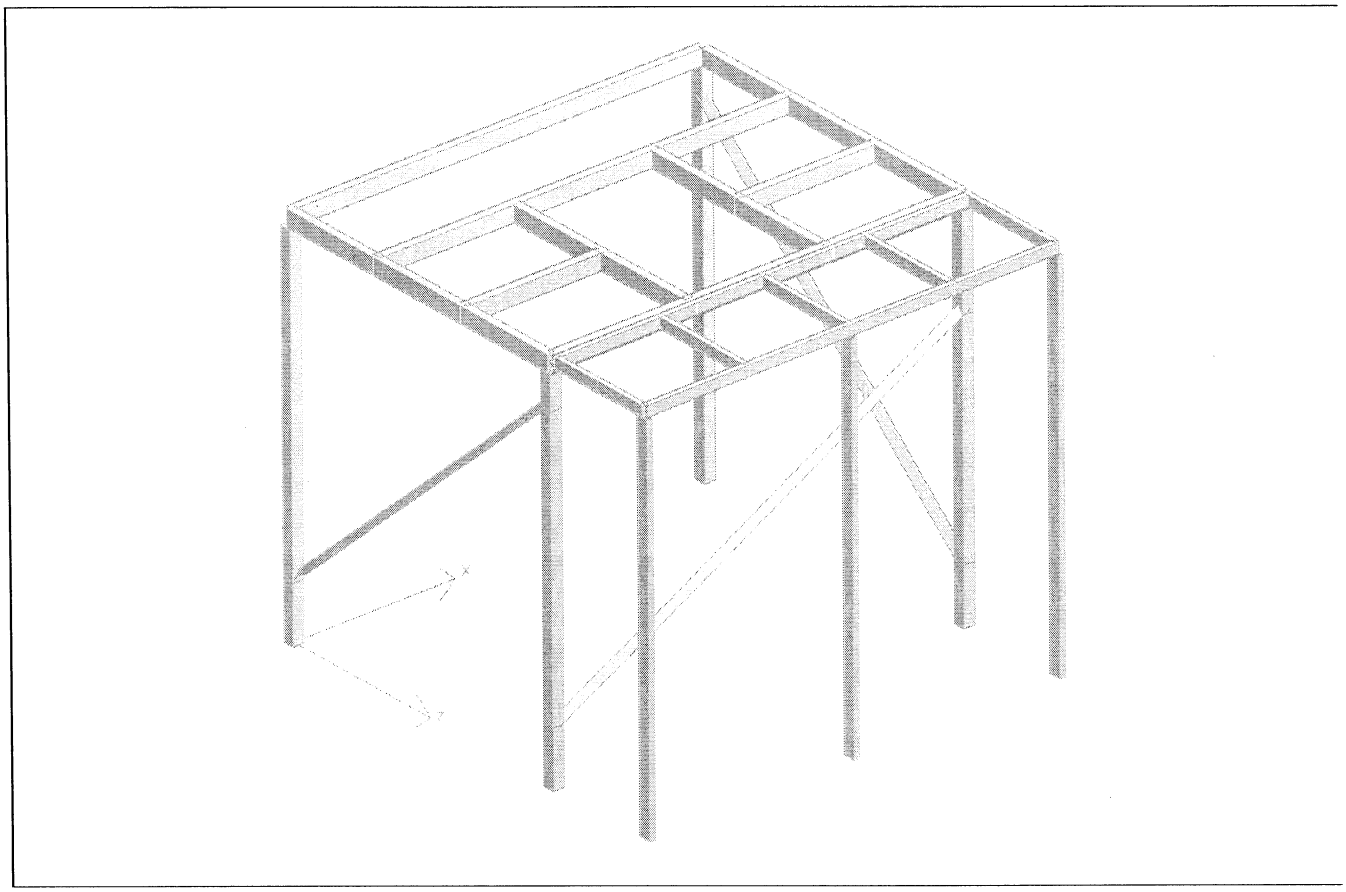

*3D Rendered View*

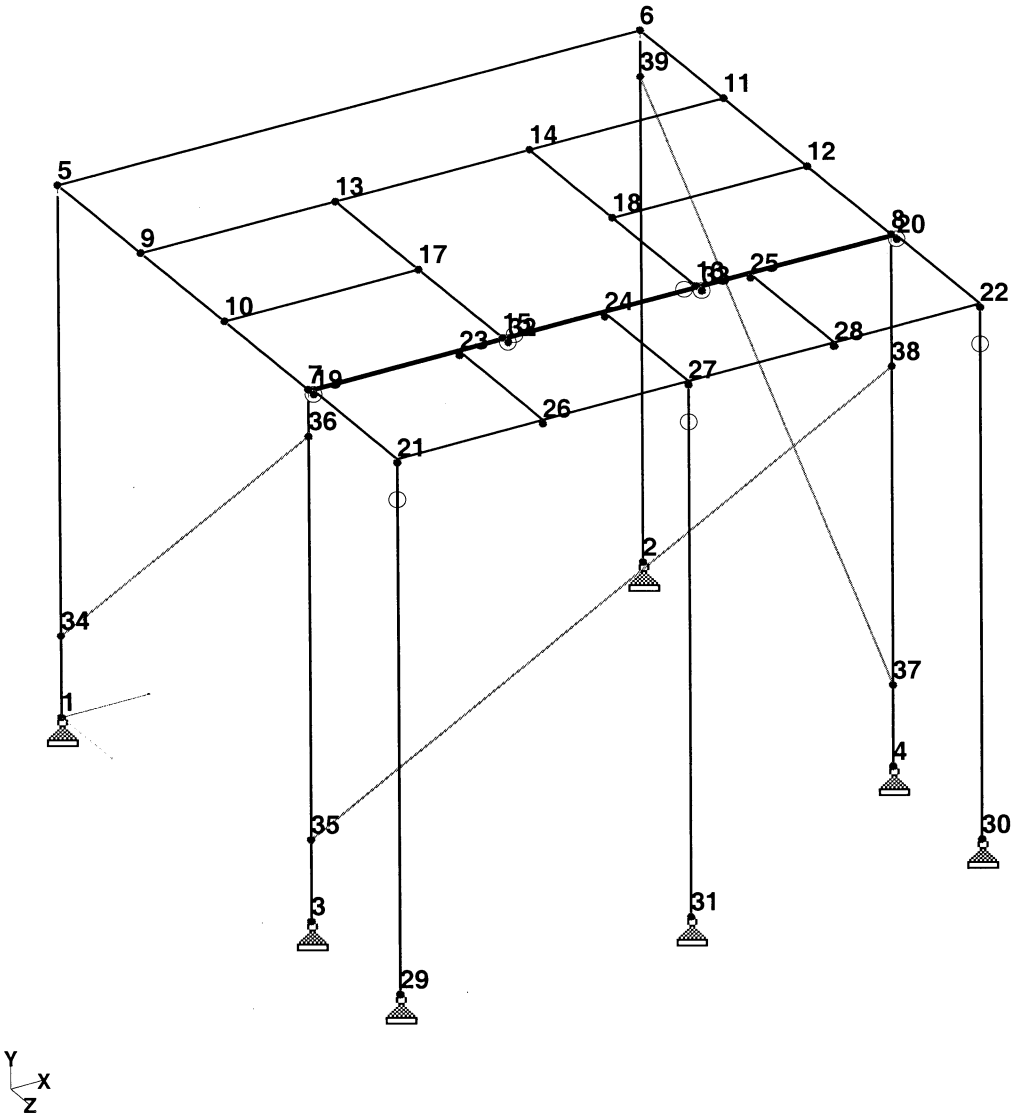


*NODE NUMBERS*

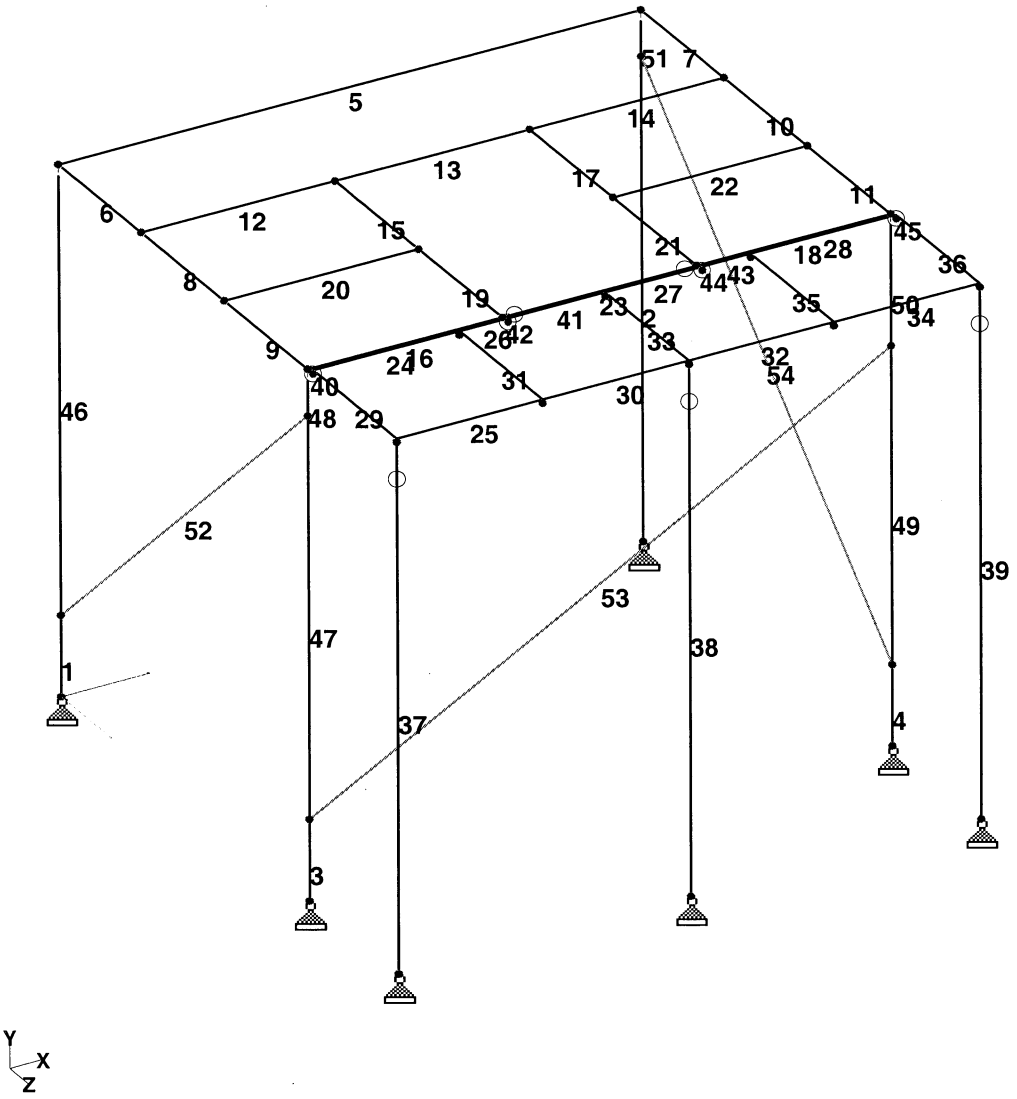


*BEAM NUMBERS*

# Job Information

| | Engineer | Checked | Approved |
|---|---|---|---|
| **Name:** | R LIPPERT | | |
| **Date:** | 12-Mar-04 | | |

**Structure Type** SPACE FRAME

| | | | |
|---|---|---|---|
| Number of Nodes | 39 | Highest Node | 39 |
| Number of Elements | 54 | Highest Beam | 54 |

| | |
|---|---|
| Number of Basic Load Cases | 10 |
| Number of Combination Load Cases | 7 |

*Included in this printout are data for:*

**All** The Whole Structure

*Included in this printout are results for load cases:*

| Type | L/C | Name |
|---|---|---|
| Primary | 1 | DEAD LOAD |
| Combination | 11 | DL+ULL+LAT1 |
| Combination | 12 | DL+ULL+LAT2 |
| Combination | 13 | DL+ULL+LAT3 |
| Combination | 14 | DL+LL1+LL2 |
| Combination | 15 | DL+LL2+LL3 |
| Combination | 16 | DL+LL2+LL4 |
| Combination | 17 | DL+LL5 |

# Nodes

| Node | X (in) | Y (in) | Z (in) |
|---|---|---|---|
| 1 | 0.000 | 0.000 | 0.000 |
| 2 | 144.000 | 0.000 | 0.000 |
| 3 | 0.000 | 0.000 | 108.000 |
| 4 | 144.000 | 0.000 | 108.000 |
| 5 | 0.000 | 140.000 | 0.000 |
| 6 | 144.000 | 140.000 | 0.000 |
| 7 | 0.000 | 140.000 | 108.000 |
| 8 | 144.000 | 140.000 | 108.000 |
| 9 | 0.000 | 140.000 | 36.000 |
| 10 | 0.000 | 140.000 | 72.000 |
| 11 | 144.000 | 140.000 | 36.000 |
| 12 | 144.000 | 140.000 | 72.000 |
| 13 | 48.000 | 140.000 | 36.000 |
| 14 | 96.000 | 140.000 | 36.000 |
| 15 | 48.000 | 140.000 | 108.000 |
| 16 | 96.000 | 140.000 | 108.000 |

## Nodes Cont...

| Node | X (in) | Y (in) | Z (in) |
|---|---|---|---|
| 17 | 48.000 | 140.000 | 72.000 |
| 18 | 96.000 | 140.000 | 72.000 |
| 19 | 0.000 | 140.000 | 110.500 |
| 20 | 144.000 | 140.000 | 110.500 |
| 21 | 0.000 | 140.000 | 146.500 |
| 22 | 144.000 | 140.000 | 146.500 |
| 23 | 36.000 | 140.000 | 110.500 |
| 24 | 72.000 | 140.000 | 110.500 |
| 25 | 108.000 | 140.000 | 110.500 |
| 26 | 36.000 | 140.000 | 146.500 |
| 27 | 72.000 | 140.000 | 146.500 |
| 28 | 108.000 | 140.000 | 146.500 |
| 29 | 0.000 | 0.000 | 146.500 |
| 30 | 144.000 | 0.000 | 146.500 |
| 31 | 72.000 | 0.000 | 146.500 |
| 32 | 48.000 | 140.000 | 110.500 |
| 33 | 96.000 | 140.000 | 110.500 |
| 34 | 0.000 | 21.460 | 0.000 |
| 35 | 0.000 | 21.460 | 108.000 |
| 36 | 0.000 | 127.737 | 108.000 |
| 37 | 144.000 | 21.460 | 108.000 |
| 38 | 144.000 | 105.255 | 108.000 |
| 39 | 144.000 | 127.737 | 0.000 |

## Beams

| Beam | Node A | Node B | Length (in) | Property | β (degrees) |
|---|---|---|---|---|---|
| 1 | 1 | 34 | 21.000 | 1 | 0 |
| 2 | 2 | 39 | 125.000 | 1 | 0 |
| 3 | 3 | 35 | 21.000 | 1 | 0 |
| 4 | 4 | 37 | 21.000 | 1 | 0 |
| 5 | 5 | 6 | 144.000 | 2 | 0 |
| 6 | 5 | 9 | 36.000 | 2 | 0 |
| 7 | 6 | 11 | 36.000 | 2 | 0 |
| 8 | 9 | 10 | 36.000 | 2 | 0 |
| 9 | 10 | 7 | 36.000 | 2 | 0 |
| 10 | 11 | 12 | 36.000 | 2 | 0 |
| 11 | 12 | 8 | 36.000 | 2 | 0 |
| 12 | 9 | 13 | 48.000 | 2 | 0 |
| 13 | 13 | 14 | 48.000 | 2 | 0 |
| 14 | 14 | 11 | 48.000 | 2 | 0 |
| 15 | 13 | 17 | 36.000 | 2 | 0 |
| 16 | 7 | 15 | 48.000 | 2 | 0 |
| 17 | 14 | 18 | 36.000 | 2 | 0 |

## Beams Cont...

| Beam | Node A | Node B | Length (in) | Property | β (degrees) |
|---|---|---|---|---|---|
| 18 | 8 | 16 | 48.000 | 2 | 0 |
| 19 | 17 | 15 | 36.000 | 2 | 0 |
| 20 | 10 | 17 | 48.000 | 2 | 0 |
| 21 | 18 | 16 | 36.000 | 2 | 0 |
| 22 | 12 | 18 | 48.000 | 2 | 0 |
| 23 | 15 | 16 | 48.000 | 2 | 0 |
| 24 | 19 | 23 | 36.000 | 3 | 0 |
| 25 | 21 | 26 | 36.000 | 3 | 0 |
| 26 | 23 | 32 | 12.000 | 3 | 0 |
| 27 | 24 | 33 | 24.000 | 3 | 0 |
| 28 | 25 | 20 | 36.000 | 3 | 0 |
| 29 | 19 | 21 | 36.000 | 3 | 0 |
| 30 | 26 | 27 | 36.000 | 3 | 0 |
| 31 | 23 | 26 | 36.000 | 3 | 0 |
| 32 | 27 | 28 | 36.000 | 3 | 0 |
| 33 | 24 | 27 | 36.000 | 3 | 0 |
| 34 | 28 | 22 | 36.000 | 3 | 0 |
| 35 | 25 | 28 | 36.000 | 3 | 0 |
| 36 | 20 | 22 | 36.000 | 3 | 0 |
| 37 | 29 | 21 | 139.000 | 3 | 90 |
| 38 | 31 | 27 | 139.000 | 3 | 90 |
| 39 | 30 | 22 | 139.000 | 3 | 90 |
| 40 | 7 | 19 | 2.500 | 4 | 0 |
| 41 | 32 | 24 | 24.000 | 3 | 0 |
| 42 | 15 | 32 | 2.500 | 4 | 0 |
| 43 | 33 | 25 | 12.000 | 3 | 0 |
| 44 | 16 | 33 | 2.500 | 4 | 0 |
| 45 | 8 | 20 | 2.500 | 4 | 0 |
| 46 | 34 | 5 | 116.000 | 1 | 0 |
| 47 | 35 | 36 | 104.000 | 1 | 0 |
| 48 | 36 | 7 | 12.000 | 1 | 0 |
| 49 | 37 | 38 | 81.999 | 1 | 0 |
| 50 | 38 | 8 | 34.000 | 1 | 0 |
| 51 | 39 | 6 | 12.000 | 1 | 0 |
| 52 | 34 | 36 | 151.522 | 5 | 315 |
| 53 | 35 | 38 | 166.606 | 5 | 315 |
| 54 | 37 | 39 | 151.522 | 5 | 315 |

## Section Properties

| Prop | Section | Area ($in^2$) | $I_{yy}$ ($in^4$) | $I_{zz}$ ($in^4$) | J ($in^4$) | Material |
|---|---|---|---|---|---|---|
| 1 | TUB40403 | 2.770 | 6.600 | 6.600 | 10.390 | STEEL |
| 2 | TUB60303 | 3.140 | 4.800 | 14.300 | 11.619 | STEEL |
| 3 | TUB40203 | 2.020 | 1.300 | 3.900 | 3.183 | STEEL |
| 4 | Prismatic General | 100.000 | 10E 3 | 10E 3 | 10E 3 | STEEL |
| 5 | L40404 | 1.938 | 4.853 | 1.225 | 0.041 | STEEL |

## Materials

| Mat | Name | E ($kip/in^2$) | ν | Density ($kip/in^3$) | α (1/°F) |
|---|---|---|---|---|---|
| 1 | STEEL | 29E 3 | 0.300 | 0.000 | 6.5E -6 |

## Supports

| Node | X (kip/in) | Y (kip/in) | Z (kip/in) | rX (kip-ft/deg) | rY (kip-ft/deg) | rZ (kip-ft/deg) |
|---|---|---|---|---|---|---|
| 1 | Fixed | Fixed | Fixed | - | - | - |
| 2 | Fixed | Fixed | Fixed | - | - | - |
| 3 | Fixed | Fixed | Fixed | - | - | - |
| 4 | Fixed | Fixed | Fixed | - | - | - |
| 29 | Fixed | Fixed | Fixed | - | - | - |
| 30 | Fixed | Fixed | Fixed | - | - | - |
| 31 | Fixed | Fixed | Fixed | - | - | - |

## Releases

*Beam ends not shown in this table are fixed in all directions.*

| Beam | Node | x | y | z | rx | ry | rz |
|---|---|---|---|---|---|---|---|
| 23 | 15 | Fixed | Fixed | Fixed | Fixed | Pin | Pin |
| 23 | 16 | Fixed | Fixed | Fixed | Fixed | Pin | Pin |
| 37 | 21 | Fixed | Fixed | Fixed | Fixed | Pin | Pin |
| 38 | 27 | Fixed | Fixed | Fixed | Fixed | Pin | Pin |
| 39 | 22 | Fixed | Fixed | Fixed | Fixed | Pin | Pin |
| 40 | 19 | Fixed | Fixed | Fixed | Fixed | Pin | Pin |
| 42 | 32 | Fixed | Fixed | Fixed | Fixed | Pin | Pin |
| 44 | 33 | Fixed | Fixed | Fixed | Fixed | Pin | Pin |
| 45 | 20 | Fixed | Fixed | Fixed | Fixed | Pin | Pin |
| 52 | 34 | Fixed | Fixed | Fixed | Fixed | Pin | Pin |
| 52 | 36 | Fixed | Fixed | Fixed | Fixed | Pin | Pin |
| 53 | 35 | Fixed | Fixed | Fixed | Fixed | Pin | Pin |
| 53 | 38 | Fixed | Fixed | Fixed | Fixed | Pin | Pin |
| 54 | 37 | Fixed | Fixed | Fixed | Fixed | Pin | Pin |
| 54 | 39 | Fixed | Fixed | Fixed | Fixed | Pin | Pin |

## Basic Load Cases

| Number | Name |
|---|---|
| 1 | DEAD LOAD |
| 2 | UNIFORM LL |
| 3 | CONCEN LL1 |
| 4 | CONCEN LL2 |
| 5 | CONCEN LL3 |
| 6 | CONCEN LL4 |
| 7 | CONCEN LL5 |
| 8 | LATLOAD1 |
| 9 | LATLOAD2 |
| 10 | LATLOAD3 |

## Combination Load Cases

| Comb. | Combination L/C Name | Primary | Primary L/C Name | Factor |
|---|---|---|---|---|
| 11 | DL+ULL+LAT1 | 1 | DEAD LOAD | 1.00 |
| | | 2 | UNIFORM LL | 1.00 |
| | | 8 | LATLOAD1 | 1.00 |
| 12 | DL+ULL+LAT2 | 1 | DEAD LOAD | 1.00 |
| | | 2 | UNIFORM LL | 1.00 |
| | | 9 | LATLOAD2 | 1.00 |
| 13 | DL+ULL+LAT3 | 1 | DEAD LOAD | 1.00 |
| | | 2 | UNIFORM LL | 1.00 |
| | | 10 | LATLOAD3 | 1.00 |
| 14 | DL+LL1+LL2 | 1 | DEAD LOAD | 1.00 |
| | | 3 | CONCEN LL1 | 1.00 |
| | | 4 | CONCEN LL2 | 1.00 |
| 15 | DL+LL2+LL3 | 1 | DEAD LOAD | 1.00 |
| | | 4 | CONCEN LL2 | 1.00 |
| | | 5 | CONCEN LL3 | 1.00 |
| 16 | DL+LL2+LL4 | 1 | DEAD LOAD | 1.00 |
| | | 4 | CONCEN LL2 | 1.00 |
| | | 6 | CONCEN LL4 | 1.00 |
| 17 | DL+LL5 | 1 | DEAD LOAD | 1.00 |
| | | 7 | CONCEN LL5 | 1.00 |

## Beam Loads : 1 DEAD LOAD

| Beam | Type | | Direction | Fa | Da (in) | Fb | Db | Ecc. (in) |
|---|---|---|---|---|---|---|---|---|
| 5 | UNI | lbf/ft | GY | -11.000 | - | - | - | - |
| 12 | UNI | lbf/ft | GY | -22.000 | - | - | - | - |
| 13 | UNI | lbf/ft | GY | -22.000 | - | - | - | - |
| 14 | UNI | lbf/ft | GY | -22.000 | - | - | - | - |
| 16 | UNI | lbf/ft | GY | -22.000 | - | - | - | - |
| 18 | UNI | lbf/ft | GY | -22.000 | - | - | - | - |
| 20 | UNI | lbf/ft | GY | -22.000 | - | - | - | - |
| 22 | UNI | lbf/ft | GY | -22.000 | - | - | - | - |
| 23 | UNI | lbf/ft | GY | -22.000 | - | - | - | - |
| 25 | UNI | lbf/ft | GY | -11.000 | - | - | - | - |
| 30 | UNI | lbf/ft | GY | -11.000 | - | - | - | - |
| 32 | UNI | lbf/ft | GY | -11.000 | - | - | - | - |
| 34 | UNI | lbf/ft | GY | -11.000 | - | - | - | - |

## Selfweight : 1 DEAD LOAD

| Direction | Factor |
|---|---|
| Y | -1.000 |

## Beam Loads : 2 UNIFORM LL

| Beam | Type | | Direction | Fa | Da (in) | Fb | Db | Ecc. (in) |
|---|---|---|---|---|---|---|---|---|
| 5 | UNI | lbf/ft | GY | -60.000 | - | - | - | - |
| 12 | UNI | lbf/ft | GY | -120.000 | - | - | - | - |
| 13 | UNI | lbf/ft | GY | -120.000 | - | - | - | - |
| 14 | UNI | lbf/ft | GY | -120.000 | - | - | - | - |
| 16 | UNI | lbf/ft | GY | -120.000 | - | - | - | - |
| 18 | UNI | lbf/ft | GY | -120.000 | - | - | - | - |
| 20 | UNI | lbf/ft | GY | -120.000 | - | - | - | - |
| 22 | UNI | lbf/ft | GY | -120.000 | - | - | - | - |
| 23 | UNI | lbf/ft | GY | -120.000 | - | - | - | - |
| 25 | UNI | lbf/ft | GY | -60.000 | - | - | - | - |
| 30 | UNI | lbf/ft | GY | -60.000 | - | - | - | - |
| 32 | UNI | lbf/ft | GY | -60.000 | - | - | - | - |
| 34 | UNI | lbf/ft | GY | -60.000 | - | - | - | - |

## Beam Loads : 3 CONCEN LL1

| Beam | Type | | Direction | Fa | Da (in) | Fb | Db | Ecc. (in) |
|---|---|---|---|---|---|---|---|---|
| 13 | CON | lb | GY | -300.000 | - | - | - | - |

## Beam Loads : 4 CONCEN LL2

| Beam | Type | Direction | Fa | Da (in) | Fb | Db | Ecc. (in) |
|---|---|---|---|---|---|---|---|
| 22 | CON | lb GY | -300.000 | - | - | - | - |

## Beam Loads : 5 CONCEN LL3

| Beam | Type | Direction | Fa | Da (in) | Fb | Db | Ecc. (in) |
|---|---|---|---|---|---|---|---|
| 20 | CON | lb GY | -300.000 | - | - | - | - |

## Beam Loads : 6 CONCEN LL4

| Beam | Type | Direction | Fa | Da (in) | Fb | Db | Ecc. (in) |
|---|---|---|---|---|---|---|---|
| 23 | CON | lb GY | -300.000 | - | - | - | - |

## Beam Loads : 7 CONCEN LL5

| Beam | Type | Direction | Fa | Da (in) | Fb | Db | Ecc. (in) |
|---|---|---|---|---|---|---|---|
| 33 | CON | lb GY | -300.000 | - | - | - | - |

## Node Loads : 8 LATLOAD1

| Node | FX (lb) | FY (lb) | FZ (lb) | MX (kip-in) | MY (kip-in) | MZ (kip-in) |
|---|---|---|---|---|---|---|
| 27 | -250.000 | - | - | - | - | - |

## Node Loads : 9 LATLOAD2

| Node | FX (lb) | FY (lb) | FZ (lb) | MX (kip-in) | MY (kip-in) | MZ (kip-in) |
|---|---|---|---|---|---|---|
| 14 | -250.000 | - | - | - | - | - |

## Node Loads : 10 LATLOAD3

| Node | FX (lb) | FY (lb) | FZ (lb) | MX (kip-in) | MY (kip-in) | MZ (kip-in) |
|---|---|---|---|---|---|---|
| 10 | - | - | -250.000 | - | - | - |

# Node Displacement Summary

| | Node | L/C | X (in) | Y (in) | Z (in) | Resultant (in) | rX (deg) | rY (deg) | rZ (deg) |
|---|---|---|---|---|---|---|---|---|---|
| Max X | 37 | 16:DL+LL2+LL | **0.000** | -0.000 | 0.010 | 0.010 | 0.025 | -0.009 | 0.001 |
| Min X | 21 | 11:DL+ULL+LA | **-0.234** | 0.000 | -0.047 | 0.238 | -0.011 | -0.049 | -0.047 |
| Max Y | 19 | 13:DL+ULL+LA | -0.139 | **0.001** | -0.069 | 0.155 | -0.008 | -0.045 | -0.158 |
| Min Y | 14 | 11:DL+ULL+LA | -0.145 | **-0.208** | 0.021 | 0.254 | -0.009 | -0.038 | 0.114 |
| Max Z | 38 | 11:DL+ULL+LA | -0.090 | -0.002 | **0.080** | 0.120 | -0.018 | -0.034 | 0.132 |
| Min Z | 10 | 13:DL+ULL+LA | -0.107 | -0.053 | **-0.069** | 0.138 | -0.053 | -0.046 | -0.170 |
| Max rX | 5 | 13:DL+ULL+LA | -0.053 | -0.003 | -0.069 | 0.087 | **0.097** | -0.045 | -0.098 |
| Min rX | 27 | 11:DL+ULL+LA | -0.233 | -0.003 | 0.007 | 0.233 | **-0.284** | -0.043 | -0.005 |
| Max rY | 16 | 12:DL+ULL+LA | -0.192 | -0.163 | 0.015 | 0.253 | -0.054 | **0.002** | 0.159 |
| Min rY | 15 | 13:DL+ULL+LA | -0.137 | -0.146 | -0.029 | 0.203 | -0.070 | **-0.061** | -0.152 |
| Max rZ | 3 | 11:DL+ULL+LA | 0.000 | 0.000 | 0.000 | 0.000 | 0.012 | -0.046 | **0.246** |
| Min rZ | 9 | 11:DL+ULL+LA | -0.145 | -0.054 | -0.047 | 0.162 | 0.044 | -0.042 | **-0.202** |
| Max Rst | 24 | 11:DL+ULL+LA | -0.199 | -0.191 | 0.007 | **0.276** | -0.283 | -0.042 | -0.012 |

# Beam Force Detail Summary

*Sign convention as diagrams:- positive above line, negative below line except Fx where positive is compression. Distance d is given from beam end A.*

| | | | | Axial | Shear | | Torsion | Bending | |
|---|---|---|---|---|---|---|---|---|---|
| | Beam | L/C | d (in) | Fx (lb) | Fy (lb) | Fz (lb) | Mx (kip-in) | My (kip-in) | Mz (kip-in) |
| Max Fx | 41 | 11:DL+ULL+LA | 0.000 | **3.01E 3** | -41.287 | 33.054 | 2.433 | -0.234 | -13.028 |
| Min Fx | 23 | 11:DL+ULL+LA | 0.000 | **-3.11E 3** | 305.327 | -0.000 | -0.190 | 0.000 | 0.000 |
| Max Fy | 12 | 11:DL+ULL+LA | 0.000 | 84.559 | **1.09E 3** | -39.637 | 2.729 | 0.830 | 8.283 |
| Min Fy | 14 | 11:DL+ULL+LA | 48.000 | 34.863 | **-1.08E 3** | 50.648 | -2.457 | 1.412 | 7.087 |
| Max Fz | 44 | 12:DL+ULL+LA | 0.000 | 30.145 | -342.673 | **2.17E 3** | 14.117 | -5.414 | -0.945 |
| Min Fz | 42 | 11:DL+ULL+LA | 0.000 | -1.352 | -234.147 | **-2.49E 3** | -11.787 | 6.232 | -0.674 |
| Max Mx | 44 | 11:DL+ULL+LA | 0.000 | -16.070 | -349.860 | 2.09E 3 | **14.138** | -5.234 | -0.963 |
| Min Mx | 42 | 12:DL+ULL+LA | 0.000 | -46.638 | -232.549 | -2.4E 3 | **-11.840** | 6.009 | -0.670 |
| Max My | 46 | 12:DL+ULL+LA | 116.000 | 1.45E 3 | -86.245 | 78.929 | -0.007 | **8.035** | 11.809 |
| Min My | 50 | 12:DL+ULL+LA | 34.000 | 1.85E 3 | -94.110 | -64.490 | -0.002 | **-6.561** | -5.276 |
| Max Mz | 48 | 13:DL+ULL+LA | 12.000 | 1.93E 3 | -141.154 | 266.063 | 0.005 | -1.908 | **17.106** |
| Min Mz | 13 | 11:DL+ULL+LA | 24.000 | 103.702 | 18.296 | 26.720 | -0.189 | -0.121 | **-35.963** |

# Reactions

| Node | L/C | Horizontal FX (lb) | Vertical FY (lb) | Horizontal FZ (lb) | Moment MX (kip-in) | MY (kip-in) | MZ (kip-in) |
|---|---|---|---|---|---|---|---|
| 1 | 1:DEAD LOAD | 19.352 | 537.093 | 15.103 | 0.000 | 0.000 | 0.000 |
| | 11:DL+ULL+LA | 77.773 | 1.69E 3 | 131.136 | 0.000 | 0.000 | 0.000 |
| | 12:DL+ULL+LA | 86.245 | 1.47E 3 | -50.512 | 0.000 | 0.000 | 0.000 |
| | 13:DL+ULL+LA | 64.896 | 1.88E 3 | 298.496 | 0.000 | 0.000 | 0.000 |
| | 14:DL+LL1+LL | 24.842 | 656.840 | 19.564 | 0.000 | 0.000 | 0.000 |
| | 15:DL+LL2+LL | 22.149 | 638.748 | 21.589 | 0.000 | 0.000 | 0.000 |
| | 16:DL+LL2+LL | 24.525 | 565.971 | 19.985 | 0.000 | 0.000 | 0.000 |
| | 17:DL+LL5 | 21.532 | 541.274 | 17.221 | 0.000 | 0.000 | 0.000 |
| 2 | 1:DEAD LOAD | -10.043 | 501.425 | 10.874 | 0.000 | 0.000 | 0.000 |
| | 11:DL+ULL+LA | -34.711 | 1.35E 3 | 41.676 | 0.000 | 0.000 | 0.000 |
| | 12:DL+ULL+LA | -26.120 | 1.56E 3 | 38.416 | 0.000 | 0.000 | 0.000 |
| | 13:DL+ULL+LA | -45.885 | 1.48E 3 | 40.691 | 0.000 | 0.000 | 0.000 |
| | 14:DL+LL1+LL | -14.499 | 681.678 | 19.233 | 0.000 | 0.000 | 0.000 |
| | 15:DL+LL2+LL | -11.962 | 599.770 | 16.137 | 0.000 | 0.000 | 0.000 |
| | 16:DL+LL2+LL | -9.426 | 572.547 | 15.410 | 0.000 | 0.000 | 0.000 |
| | 17:DL+LL5 | -9.137 | 493.772 | 10.966 | 0.000 | 0.000 | 0.000 |
| 3 | 1:DEAD LOAD | 7.875 | 827.203 | -8.122 | 0.000 | 0.000 | 0.000 |
| | 11:DL+ULL+LA | 287.282 | 2.2E 3 | -31.999 | 0.000 | 0.000 | 0.000 |
| | 12:DL+ULL+LA | 268.410 | 2.41E 3 | -29.394 | 0.000 | 0.000 | 0.000 |
| | 13:DL+ULL+LA | 36.935 | 1.77E 3 | -34.237 | 0.000 | 0.000 | 0.000 |
| | 14:DL+LL1+LL | 12.632 | 907.214 | -11.807 | 0.000 | 0.000 | 0.000 |
| | 15:DL+LL2+LL | 11.678 | 1.03E 3 | -13.949 | 0.000 | 0.000 | 0.000 |
| | 16:DL+LL2+LL | 11.325 | 998.038 | -8.660 | 0.000 | 0.000 | 0.000 |
| | 17:DL+LL5 | 8.458 | 897.976 | -7.925 | 0.000 | 0.000 | 0.000 |
| 4 | 1:DEAD LOAD | -17.184 | 863.306 | -17.855 | 0.000 | 0.000 | 0.000 |
| | 11:DL+ULL+LA | -80.344 | 2.05E 3 | -140.813 | 0.000 | 0.000 | 0.000 |
| | 12:DL+ULL+LA | -78.536 | 1.84E 3 | 41.490 | 0.000 | 0.000 | 0.000 |
| | 13:DL+ULL+LA | -55.946 | 2.16E 3 | -54.949 | 0.000 | 0.000 | 0.000 |
| | 14:DL+LL1+LL | -22.975 | 1.08E 3 | -26.990 | 0.000 | 0.000 | 0.000 |
| | 15:DL+LL2+LL | -21.864 | 1.07E 3 | -23.777 | 0.000 | 0.000 | 0.000 |
| | 16:DL+LL2+LL | -26.425 | 1.19E 3 | -26.735 | 0.000 | 0.000 | 0.000 |
| | 17:DL+LL5 | -20.853 | 946.006 | -20.262 | 0.000 | 0.000 | 0.000 |
| 29 | 1:DEAD LOAD | 0.000 | 53.160 | 0.000 | 0.000 | 0.000 | 0.000 |
| | 11:DL+ULL+LA | 0.000 | -9.269 | 0.000 | 0.000 | 0.000 | 0.000 |
| | 12:DL+ULL+LA | 0.000 | -3.462 | 0.000 | 0.000 | 0.000 | 0.000 |
| | 13:DL+ULL+LA | 0.000 | 16.957 | 0.000 | 0.000 | 0.000 | 0.000 |
| | 14:DL+LL1+LL | 0.000 | 30.421 | 0.000 | 0.000 | 0.000 | 0.000 |
| | 15:DL+LL2+LL | 0.000 | 31.349 | 0.000 | 0.000 | 0.000 | 0.000 |
| | 16:DL+LL2+LL | 0.000 | 10.234 | 0.000 | 0.000 | 0.000 | 0.000 |
| | 17:DL+LL5 | 0.000 | 33.523 | 0.000 | 0.000 | 0.000 | 0.000 |
| 30 | 1:DEAD LOAD | 0.000 | 52.725 | -0.000 | 0.000 | 0.000 | 0.000 |
| | 11:DL+ULL+LA | 0.000 | -6.006 | 0.000 | 0.000 | 0.000 | 0.000 |
| | 12:DL+ULL+LA | 0.000 | -7.610 | 0.000 | 0.000 | 0.000 | 0.000 |
| | 13:DL+ULL+LA | 0.000 | 16.985 | 0.000 | 0.000 | 0.000 | 0.000 |
| | 14:DL+LL1+LL | 0.000 | 29.502 | -0.000 | 0.000 | 0.000 | 0.000 |

## Reactions Cont...

| Node | L/C | Horizontal FX (lb) | Vertical FY (lb) | Horizontal FZ (lb) | MX (kip-in) | Moment MY (kip-in) | MZ (kip-in) |
|---|---|---|---|---|---|---|---|
| | 15:DL+LL2+LL | 0.000 | 30.815 | -0.000 | 0.000 | 0.000 | 0.000 |
| | 16:DL+LL2+LL | 0.000 | 9.227 | -0.000 | 0.000 | 0.000 | 0.000 |
| | 17:DL+LL5 | 0.000 | 32.994 | -0.000 | 0.000 | 0.000 | 0.000 |
| 31 | 1:DEAD LOAD | 0.000 | 398.266 | -0.000 | 0.000 | 0.000 | 0.000 |
| | 11:DL+ULL+LA | 0.000 | 1.24E 3 | -0.000 | 0.000 | 0.000 | 0.000 |
| | 12:DL+ULL+LA | 0.000 | 1.24E 3 | -0.000 | 0.000 | 0.000 | 0.000 |
| | 13:DL+ULL+LA | 0.000 | 1.19E 3 | 0.000 | 0.000 | 0.000 | 0.000 |
| | 14:DL+LL1+LL | 0.000 | 444.227 | -0.000 | 0.000 | 0.000 | 0.000 |
| | 15:DL+LL2+LL | 0.000 | 441.987 | -0.000 | 0.000 | 0.000 | 0.000 |
| | 16:DL+LL2+LL | 0.000 | 484.689 | -0.000 | 0.000 | 0.000 | 0.000 |
| | 17:DL+LL5 | 0.000 | 587.634 | -0.000 | 0.000 | 0.000 | 0.000 |

## Failure Ratio

| Beam | Analysis Property | New Property | Ratio | Ay ($in^2$) | Az ($in^2$) | Ax ($in^2$) | Dw (in) | Bf (in) | Iz ($in^4$) | Iy ($in^4$) | Ix ($in^4$) |
|---|---|---|---|---|---|---|---|---|---|---|---|
| 1 | TUB40403 | TUB40403 | 0.101 | 1.500 | 1.500 | 2.770 | 4.000 | 4.000 | 6.600 | 6.600 | 10.600 |
| 2 | TUB40403 | TUB40403 | 0.136 | 1.500 | 1.500 | 2.770 | 4.000 | 4.000 | 6.600 | 6.600 | 10.600 |
| 3 | TUB40403 | TUB40403 | 0.096 | 1.500 | 1.500 | 2.770 | 4.000 | 4.000 | 6.600 | 6.600 | 10.600 |
| 4 | TUB40403 | TUB40403 | 0.074 | 1.500 | 1.500 | 2.770 | 4.000 | 4.000 | 6.600 | 6.600 | 10.600 |
| 5 | TUB60303 | TUB60303 | 0.127 | 2.250 | 1.125 | 3.140 | 6.000 | 3.000 | 14.300 | 4.800 | 11.900 |
| 6 | TUB60303 | TUB60303 | 0.185 | 2.250 | 1.125 | 3.140 | 6.000 | 3.000 | 14.300 | 4.800 | 11.900 |
| 7 | TUB60303 | TUB60303 | 0.186 | 2.250 | 1.125 | 3.140 | 6.000 | 3.000 | 14.300 | 4.800 | 11.900 |
| 8 | TUB60303 | TUB60303 | 0.174 | 2.250 | 1.125 | 3.140 | 6.000 | 3.000 | 14.300 | 4.800 | 11.900 |
| 9 | TUB60303 | TUB60303 | 0.121 | 2.250 | 1.125 | 3.140 | 6.000 | 3.000 | 14.300 | 4.800 | 11.900 |
| 10 | TUB60303 | TUB60303 | 0.173 | 2.250 | 1.125 | 3.140 | 6.000 | 3.000 | 14.300 | 4.800 | 11.900 |
| 11 | TUB60303 | TUB60303 | 0.109 | 2.250 | 1.125 | 3.140 | 6.000 | 3.000 | 14.300 | 4.800 | 11.900 |
| 12 | TUB60303 | TUB60303 | 0.216 | 2.250 | 1.125 | 3.140 | 6.000 | 3.000 | 14.300 | 4.800 | 11.900 |
| 13 | TUB60303 | TUB60303 | 0.280 | 2.250 | 1.125 | 3.140 | 6.000 | 3.000 | 14.300 | 4.800 | 11.900 |
| 14 | TUB60303 | TUB60303 | 0.218 | 2.250 | 1.125 | 3.140 | 6.000 | 3.000 | 14.300 | 4.800 | 11.900 |
| 15 | TUB60303 | TUB60303 | 0.066 | 2.250 | 1.125 | 3.140 | 6.000 | 3.000 | 14.300 | 4.800 | 11.900 |
| 16 | TUB60303 | TUB60303 | 0.127 | 2.250 | 1.125 | 3.140 | 6.000 | 3.000 | 14.300 | 4.800 | 11.900 |
| 17 | TUB60303 | TUB60303 | 0.067 | 2.250 | 1.125 | 3.140 | 6.000 | 3.000 | 14.300 | 4.800 | 11.900 |
| 18 | TUB60303 | TUB60303 | 0.146 | 2.250 | 1.125 | 3.140 | 6.000 | 3.000 | 14.300 | 4.800 | 11.900 |
| 19 | TUB60303 | TUB60303 | 0.065 | 2.250 | 1.125 | 3.140 | 6.000 | 3.000 | 14.300 | 4.800 | 11.900 |
| 20 | TUB60303 | TUB60303 | 0.049 | 2.250 | 1.125 | 3.140 | 6.000 | 3.000 | 14.300 | 4.800 | 11.900 |
| 21 | TUB60303 | TUB60303 | 0.059 | 2.250 | 1.125 | 3.140 | 6.000 | 3.000 | 14.300 | 4.800 | 11.900 |
| 22 | TUB60303 | TUB60303 | 0.047 | 2.250 | 1.125 | 3.140 | 6.000 | 3.000 | 14.300 | 4.800 | 11.900 |
| 23 | TUB60303 | TUB60303 | 0.061 | 2.250 | 1.125 | 3.140 | 6.000 | 3.000 | 14.300 | 4.800 | 11.900 |
| 24 | TUB40203 | TUB40203 | 0.120 | 1.500 | 0.750 | 2.020 | 4.000 | 2.000 | 3.900 | 1.300 | 3.800 |
| 25 | TUB40203 | TUB40203 | 0.063 | 1.500 | 0.750 | 2.020 | 4.000 | 2.000 | 3.900 | 1.300 | 3.800 |
| 26 | TUB40203 | TUB40203 | 0.079 | 1.500 | 0.750 | 2.020 | 4.000 | 2.000 | 3.900 | 1.300 | 3.800 |
| 27 | TUB40203 | TUB40203 | 0.368 | 1.500 | 0.750 | 2.020 | 4.000 | 2.000 | 3.900 | 1.300 | 3.800 |
| 28 | TUB40203 | TUB40203 | 0.113 | 1.500 | 0.750 | 2.020 | 4.000 | 2.000 | 3.900 | 1.300 | 3.800 |

# Failure Ratio Cont...

| Beam | Analysis Property | New Property | Ratio | Ay ($in^2$) | Az ($in^2$) | Ax ($in^2$) | Dw (in) | Bf (in) | Iz ($in^4$) | Iy ($in^4$) | Ix ($in^4$) |
|---|---|---|---|---|---|---|---|---|---|---|---|
| 29 | TUB40203 | TUB40203 | 0.079 | 1.500 | 0.750 | 2.020 | 4.000 | 2.000 | 3.900 | 1.300 | 3.800 |
| 30 | TUB40203 | TUB40203 | 0.143 | 1.500 | 0.750 | 2.020 | 4.000 | 2.000 | 3.900 | 1.300 | 3.800 |
| 31 | TUB40203 | TUB40203 | 0.044 | 1.500 | 0.750 | 2.020 | 4.000 | 2.000 | 3.900 | 1.300 | 3.800 |
| 32 | TUB40203 | TUB40203 | 0.135 | 1.500 | 0.750 | 2.020 | 4.000 | 2.000 | 3.900 | 1.300 | 3.800 |
| 33 | TUB40203 | TUB40203 | 0.118 | 1.500 | 0.750 | 2.020 | 4.000 | 2.000 | 3.900 | 1.300 | 3.800 |
| 34 | TUB40203 | TUB40203 | 0.067 | 1.500 | 0.750 | 2.020 | 4.000 | 2.000 | 3.900 | 1.300 | 3.800 |
| 35 | TUB40203 | TUB40203 | 0.042 | 1.500 | 0.750 | 2.020 | 4.000 | 2.000 | 3.900 | 1.300 | 3.800 |
| 36 | TUB40203 | TUB40203 | 0.075 | 1.500 | 0.750 | 2.020 | 4.000 | 2.000 | 3.900 | 1.300 | 3.800 |
| 37 | TUB40203 | TUB40203 | 0.005 | 1.500 | 0.750 | 2.020 | 4.000 | 2.000 | 3.900 | 1.300 | 3.800 |
| 38 | TUB40203 | TUB40203 | 0.123 | 1.500 | 0.750 | 2.020 | 4.000 | 2.000 | 3.900 | 1.300 | 3.800 |
| 39 | TUB40203 | TUB40203 | 0.005 | 1.500 | 0.750 | 2.020 | 4.000 | 2.000 | 3.900 | 1.300 | 3.800 |
| 40 | Prismatic Gene | 1X 1 | 0.000 | 100.000 | 100.000 | 100.000 | 1.000 | 1.000 | 10E 3 | 10E 3 | 10E 3 |
| 41 | TUB40203 | TUB40203 | 0.308 | 1.500 | 0.750 | 2.020 | 4.000 | 2.000 | 3.900 | 1.300 | 3.800 |
| 42 | Prismatic Gene | 1X 1 | 0.000 | 100.000 | 100.000 | 100.000 | 1.000 | 1.000 | 10E 3 | 10E 3 | 10E 3 |
| 43 | TUB40203 | TUB40203 | 0.095 | 1.500 | 0.750 | 2.020 | 4.000 | 2.000 | 3.900 | 1.300 | 3.800 |
| 44 | Prismatic Gene | 1X 1 | 0.000 | 100.000 | 100.000 | 100.000 | 1.000 | 1.000 | 10E 3 | 10E 3 | 10E 3 |
| 45 | Prismatic Gene | 1X 1 | 0.000 | 100.000 | 100.000 | 100.000 | 1.000 | 1.000 | 10E 3 | 10E 3 | 10E 3 |
| 46 | TUB40403 | TUB40403 | 0.226 | 1.500 | 1.500 | 2.770 | 4.000 | 4.000 | 6.600 | 6.600 | 10.600 |
| 47 | TUB40403 | TUB40403 | 0.232 | 1.500 | 1.500 | 2.770 | 4.000 | 4.000 | 6.600 | 6.600 | 10.600 |
| 48 | TUB40403 | TUB40403 | 0.247 | 1.500 | 1.500 | 2.770 | 4.000 | 4.000 | 6.600 | 6.600 | 10.600 |
| 49 | TUB40403 | TUB40403 | 0.160 | 1.500 | 1.500 | 2.770 | 4.000 | 4.000 | 6.600 | 6.600 | 10.600 |
| 50 | TUB40403 | TUB40403 | 0.197 | 1.500 | 1.500 | 2.770 | 4.000 | 4.000 | 6.600 | 6.600 | 10.600 |
| 51 | TUB40403 | TUB40403 | 0.135 | 1.500 | 1.500 | 2.770 | 4.000 | 4.000 | 6.600 | 6.600 | 10.600 |
| 52 | L40404 | L40404 | 0.129 | 0.667 | 0.667 | 1.938 | 4.000 | 4.000 | 1.225 | 4.854 | 0.040 |
| 53 | L40404 | L40404 | 1.048 | 0.667 | 0.667 | 1.938 | 4.000 | 4.000 | 1.225 | 4.854 | 0.040 |
| 54 | L40404 | L40404 | 0.097 | 0.667 | 0.667 | 1.938 | 4.000 | 4.000 | 1.225 | 4.854 | 0.040 |

# Steel Design (Track 2) Beam 53 Check 1

```
|-----------------------------------------------------------------------------|
|                                                        Y        PROPERTIES   |
| *************                                          |        IN INCH UNIT |
|             *  |=============================|                   ------------ |
| MEMBER  53  *  |  AISC SECTIONS              |                  AX =   1.94  |
|             *  | ST  L40404                  |            --Z   AY =   0.67  |
| DESIGN CODE *  |                             |                  AZ =   0.67  |
|  AISC-1989  *  ================================               SY =   1.72  |
|             *                                                   SZ =   0.79  |
|             *  |<---LENGTH (FT)=   13.88 --->|                  RY =   1.58  |
| *************                                                   RZ =   0.80  |
|                                                                              |
|                  0.0 (KIP-FEET)                                              |
| PARAMETER        |                                                STRESSES    |
| IN KIP  INCH     |                                                IN KIP  INCH |
| --------------  +                                                ------------ |
|  KL/R-Y= 105.28  |                                                FA  =   0.00 |
|  KL/R-Z= 209.57  +                                                fa  =   0.00 |
|  UNL   = 166.61  |                                                FCZ =   0.00 |
|  CB    =   1.00  +                                                FTZ =   0.00 |
|  CMY   =   0.85  |                                                FCY =   0.00 |
|  CMZ   =   0.85  +                                                FTY =   0.00 |
|  FYLD  =  36.00  |                                                fbz =   0.00 |
|  NSF   =   1.00  +---+---+---+---+---+---+---+---+---+---+---|    fby =   0.00 |
|  DFF   =   0.00******                                             Fey =   0.00 |
|  dff   =   0.00              ABSOLUTE MZ ENVELOPE                 Fez =   0.00 |
|                                 (WITH LOAD NO.)                   FV  =   0.00 |
|                                                                   fv  =   0.00 |
|                                                                              |
|                     MAX FORCE/ MOMENT SUMMARY  (KIP-FEET)                    |
|                     -------------------------                                |
|                                                                              |
|                AXIAL      SHEAR-Y    SHEAR-Z    MOMENT-Y    MOMENT-Z         |
|                                                                              |
|      VALUE      -0.1        0.0        0.0        0.1         0.1           |
|   LOCATION      13.9       13.9       13.9        6.9         6.9           |
|    LOADING         1          1          1          1           1            |
|                                                                              |
| ****************************************************************************|
| *                                                                          *|
| *                        DESIGN SUMMARY  (KIP-FEET)                        *|
| *                        --------------                                    *|
| *                                                                          *|
| *       RESULT/     CRITICAL COND/     RATIO/         LOADING/             *|
| *        FX              MY             MZ           LOCATION              |
| *       ==================================================                 |
| *         FAIL        L/R-EXCEEDS     1.048E+00          11                |
| *         0.25 C          0.10         -0.10            6.94               |
| *                                                                          *|
| ****************************************************************************|
|                                                                              |
|-----------------------------------------------------------------------------|
```

# Attachment 7

# Design Drawings

EDF-5017 Rev 1 140/

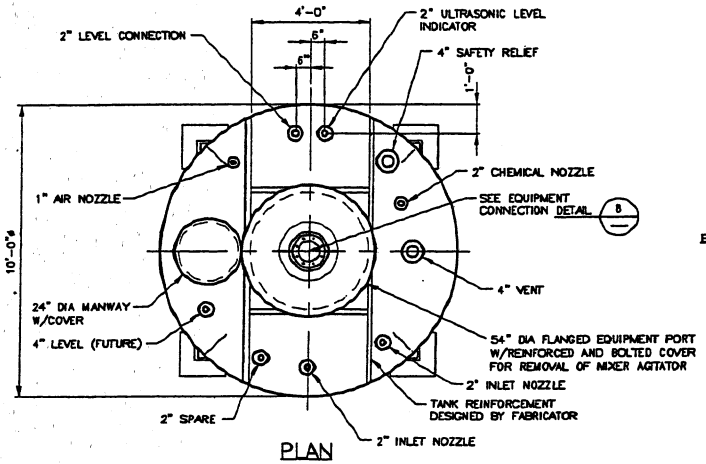


PLAN

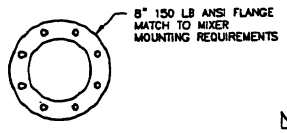


EQUIPMENT CONNECTION

DETAIL B

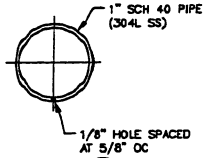


SECTION G

## NOTES

1. THE VENDOR SHALL PROVIDE THREE (3) VERTICAL TANKS IN ACCORDANCE WITH THE REQUIREMENTS OF THIS DRAWING AND THE SPECIFICATION. EACH TANK SHALL BE PROVIDED WITH A SAFETY RELIEF DEVICE(S) TO ENSURE THAT THE TANK PRESSURE IS MAINTAINED WITHIN THE LIMITS STATED BELOW.
2. EACH TANK SHALL HAVE APPROXIMATELY 8,000 GAL CAPACITY (INCLUDING THE LOWER HEAD VOLUME) AND SHALL BE A VERTICAL 10 FT NOMINAL DIAMETER TANK. THE TANK SHALL BE CONFIGURED APPROXIMATELY AS SHOWN ON THIS DRAWING. THE TANK BOTTOM SHALL BE DISHED. THE TOP OF THE TANK SHALL BE FLAT. THE TANK SHALL BE SUPPORTED ON FOUR (4) LEGS.
3. THE PERFORMANCE AND OPERATING REQUIREMENTS FOR THE TANK ARE THE FOLLOWING:

| | |
|---|---|
| TANK DESIGN PRESSURE: | -5" W.G. TO +5 PSIG |
| MAX TANK LIQUID TEMPERATURE: | 160 F |
| LIQUID SPECIFIC GRAVITY: | 1.3 |
| NOMINAL TANK VOLUME: | 8,000 GAL |
| MAXIMUM TANK DIAMETER: | 120 INCHES |
| TANK CONFIGURATION: | VERTICAL |
| TANK MATERIAL: | 304L SS |
| LOCATION OF USE: | INDOORS |

MINIMUM SHELL/HEAD THICKNESS – 3/8"

4. EACH TANK SHALL BE PROVIDED WITH VERTICAL INTERNAL BAFFLE PLATES (1/4" THICK) AS SHOWN.
5. THE TANK SHALL BE REINFORCED TO RESIST THE FOLLOWING LOADS:

| | |
|---|---|
| VERTICAL LOADS: | 1,100 LB (CONCENTRATED/LOAD AT CENTER – MIXER) |
| | 37 LB/SF (LEAD BLANKET SHIELDING ON TANK TOP) |
| BENDING MOMENT: | 2500 FT LBS ON CENTER OF TOP NOZZLE – MIXER) |
| TORQUE: | 430 FT LBS ON CENTER OF TOP NOZZLE – MIXER) |
| LIFTING LUG LOAD (MIN): | 5,000 LB DOWN |

6. THE TANKS SHALL BE PROVIDED WITH LIFTING ATTACHMENTS FOR LIFTING OF THE TANKS FROM A HORIZONTAL SHIPPING POSITION TO THE VERTICAL POSITION. ALL CONNECTING FLANGE SURFACES SHALL BE PROTECTED FROM SHIPPING DAMAGE. FLANGED PIPING CONNECTIONS SHALL NOT BE USED TO LIFT OR HANDLE THE TANKS. THE VENDOR SHALL COVER ALL OPENINGS TO MAINTAIN THE CLEANLINESS OF THE INTERIOR OF THE TANK. THE TANK SHALL BE DESIGNED TO BE LIFTED AND HANDLED EMPTY(NO INTERNAL LIQUID DURING MOVEMENT).
7. ALL NOZZLES SHALL BE FLANGED.
8. APPLICABLE CODE: ASME SEC. VIII FOR UNFIRED PRESSURE VESSELS.

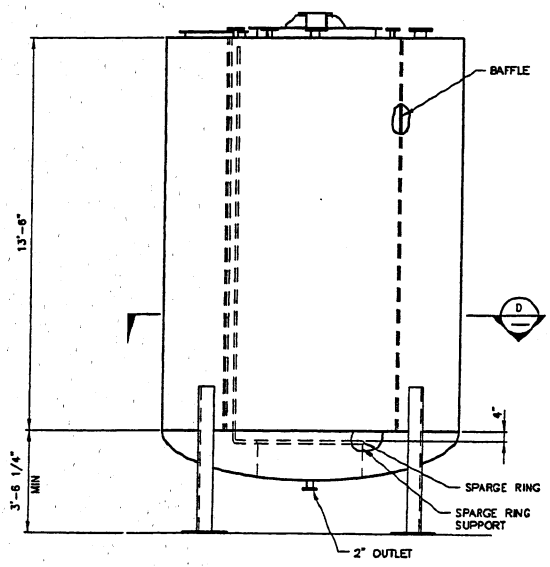


ELEVATION

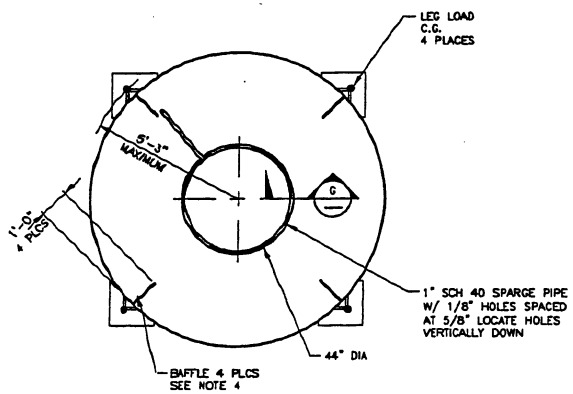


BAFFLE ORIENTATION

SECTION D

SEE NOTE 5

| REV | DESCRIPTION | EFFECTIVE DATE: |
|---|---|---|
| | REVISIONS | |

| | |
|---|---|
| FOR DRAWING INDEX SEE DRAWING NO. | 628443 |
| SUBCONTRACT NO. | N/A |
| REQUESTER: G. Mc DANNEL | |
| DESIGN: R. EASTMAN | |
| DRAWN: J. MONOUR | |
| PROJECT NO. | 22901 |
| SPC. CODE | |
| FOR REVIEW/APPROVAL SIGNATURES SEE DAR NO. 113657 | |
| EFFECTIVE DATE: | 7/15/04 |
| SCALE: 1/2" = 1'-0" | |
| DESIGN PHASE: | AFC |
| SAFETY CATEGORY: | CG |

INEEL

TAN
TSF-09/18 V-TANKS
CONSOLIDATION SKID

RECEIVING TANK PLAN, ELEVATION, DETAIL AND SECTIONS

| SIZE | CAGE CODE | INDEX MAJ. NUMBER | | | | DWG-628476 | REV |
|---|---|---|---|---|---|---|---|
| | | AREA | TYP | CI | DWG | | |
| D | 01MF3 | 034 | 0607 | 53 | 090 | | |

SCALE: 1/2"=1'-0" SHEET P-10

EDF-5017 Rev 1 141/

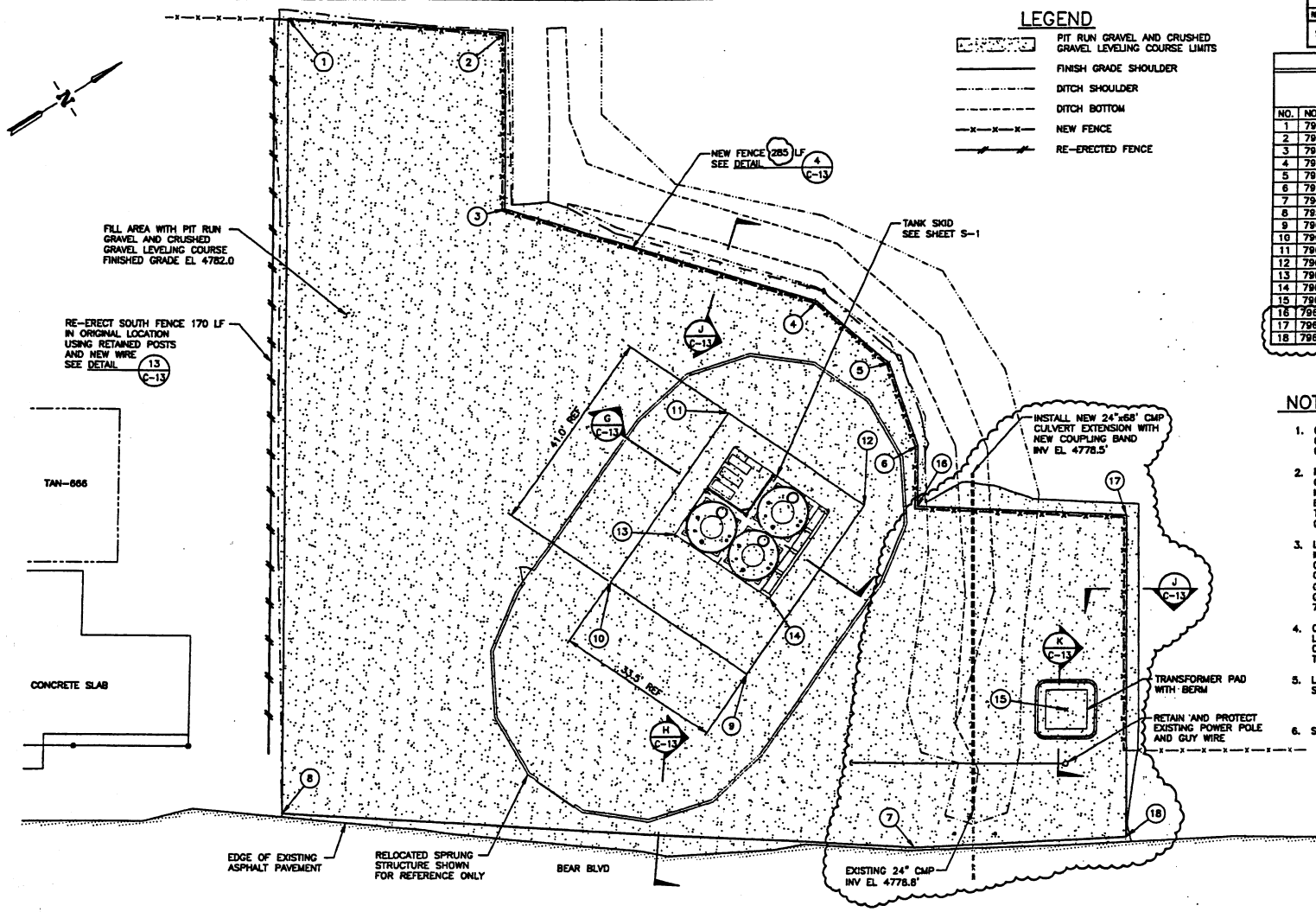


## LEGEND

- PIT RUN GRAVEL AND CRUSHED GRAVEL LEVELING COURSE LIMITS
- FINISH GRADE SHOULDER
- DITCH SHOULDER
- DITCH BOTTOM
- NEW FENCE
- RE-ERECTED FENCE

REVISIONS

| REV | DESCRIPTION | EFFECTIVE DATE |
|---|---|---|
| 1 | SEE DAR-114333 | 8/23/04 |

## COORDINATE TABLE

DATUM: HORIZONTAL: NAD27 VERTICAL: NGVD29

| NO. | NORTHING | EASTING | ELEVATION |
|---|---|---|---|
| 1 | 796079.46 | 357986.24 | 4782.0 FINISH GRADE |
| 2 | 796114.15 | 358011.71 | 4782.0 FINISH GRADE |
| 3 | 796095.46 | 358041.66 | 4782.0 FINISH GRADE |
| 4 | 796138.26 | 358091.59 | 4782.0 FINISH GRADE |
| 5 | 796143.80 | 358109.89 | 4782.0 FINISH GRADE |
| 6 | 796139.82 | 358127.11 | 4782.0 FINISH GRADE |
| 7 | 796096.55 | 358195.53 | 4782.0 FINISH GRADE |
| 8 | 795994.54 | 358121.45 | 4782.0 FINISH GRADE |
| 9 | 796066.84 | 358147.57 | 4778.58 BOTTOM OF EXCAVATION |
| 10 | 796073.70 | 358116.76 | 4778.58 BOTTOM OF EXCAVATION |
| 11 | 796111.41 | 358100.67 | 4778.58 BOTTOM OF EXCAVATION |
| 12 | 796124.56 | 358131.48 | 4778.58 BOTTOM OF EXCAVATION |
| 13 | 796089.46 | 358115.47 | SEE SHEET C-13 |
| 14 | 796098.68 | 358137.08 | SEE SHEET C-13 |
| 15 | 796135.87 | 358187.96 | 4782.0 FINISH GRADE |
| 16 | 796133.33 | 358137.38 | 4782.0 FINISH GRADE |
| 17 | 796166.63 | 358161.17 | 4782.0 FINISH GRADE |
| 18 | 796132.22 | 358216.15 | 4782.0 FINISH GRADE |

## NOTES

1. COMPACT NATURAL SOIL: AFTER CLEARING AND GRUBBING, COMPACT THE NATURAL SOIL TO 90% DENSITY PRIOR TO OVERLAYING WITH ANY FILL MATERIAL.
2. PIT RUN GRAVEL FILL: FILL AREA AS SHOWN WITH PIT RUN GRAVEL AND COMPACT TO 95% DENSITY. LOOSE MEASUREMENT LIFTS SHALL BE 8 INCHES MAXIMUM, AND EACH LIFT COMPACTED BEFORE THE NEXT LIFT IS PLACED THEREON. PIT RUN GRAVEL IS AVAILABLE AT THE TAN GRAVEL PIT.
3. LEVEL COURSE: OVERLAY PIT RUN GRAVEL FILL WITH 4 INCHES OF LEVELING COURSE MATERIAL TO OBTAIN FINISH GRADE AS INDICATED. COMPACT TO 95% DENSITY. LEVELING COURSE MATERIAL SHALL BE NATURALLY OR ARTIFICIALLY GRADED MIXTURE OF 3/4 INCH MAXIMUM SIZE CRUSHED GRAVEL MEETING REQUIREMENTS OF ITD SSHC SUBSECTION 703.04.
4. COMPACTION: ALL MATERIAL SHALL BE COMPACTED TO AT LEAST THE INDICATED PERCENT OF MAXIMUM DENSITY AT OPTIMUM MOISTURE CONTENT AS DETERMINED BY AASHTO T99.
5. LEVELING TOLERANCE: THE FOLLOWING VERTICAL TOLERANCES SHALL BE USED FOR GRADING.
   ±0.20 FT PIT RUN GRAVEL
   ±0.10 FT LEVELING COURSE
6. SEE SHEET C-11 FOR ESTIMATED QUANTITIES.

## FINISHED GRADE PLAN

| | |
|---|---|
| FOR DRAWING INDEX SEE DRAWING NO. 628443 | SUBCONTRACT NO. N/A |
| SCALE: 1" = 10.0' | REDMENTOR: G. Mc DANNEL |
| | DESIGN: R.F. LIPPERT |
| | DRAWN: |
| | PROJECT NO. 22901 |
| | SPCL CODE |
| DESIGN PHASE: AFC | FOR REVIEW/APPROVAL SIGNATURES SEE DAR NO. 113657 |
| SAFETY CATEGORY: CG | EFFECTIVE DATE: 7/15/04 |

INEEL — BATTELLE ENERGY ALLIANCE, LLC

TAN

TSF-09/18 V-TANKS REMEDIATION

FINISHED GRADE PLAN

| SIZE | CODE CODE | PROJECT CODE NUMBER | | | | DWG | REV |
|---|---|---|---|---|---|---|---|
| | | AREA | TYPE | G | SEQ | | |
| D | 01MF3 | 034 | 0100 | 02 | 090 | 628455 | 1 |

SCALE: 1"=10.0' SHEET C-12

Date: 08/23/04 - 3:13 P.M. | Layout Name: Finish-Grade | Ch: KJ1
Title & Design\Contributed DWG\REVISED
File: 628455-1.dwg
Path: K:\TAN WAD-1 V-Tanks Phase

142/

| REVISIONS | | |
|---|---|---|
| REV | DESCRIPTION | EFFECTIVE DATE: |
| 1 | SEE DAR-116001 | |

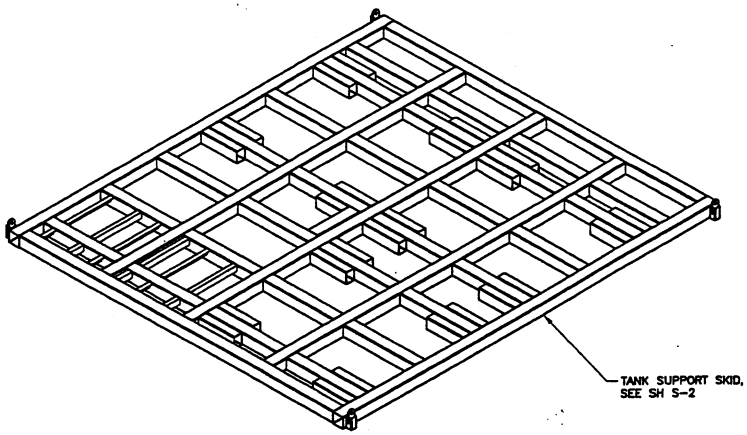


TANK SUPPORT SKID
ISOMETRIC VIEW
SCALE: NONE

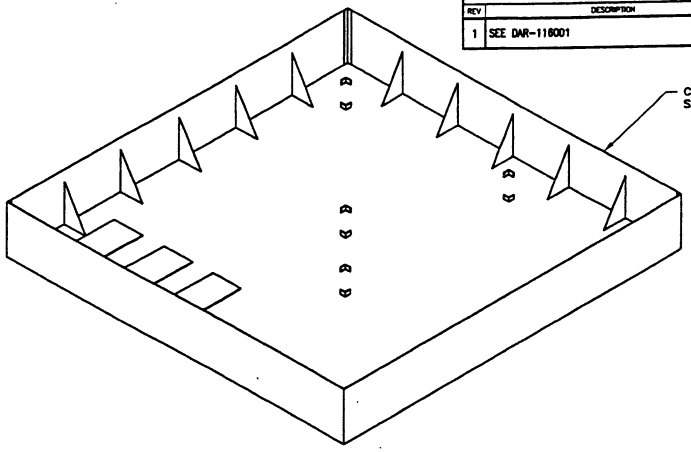


CONTAINMENT PAN
ISOMETRIC VIEW
SCALE: NONE

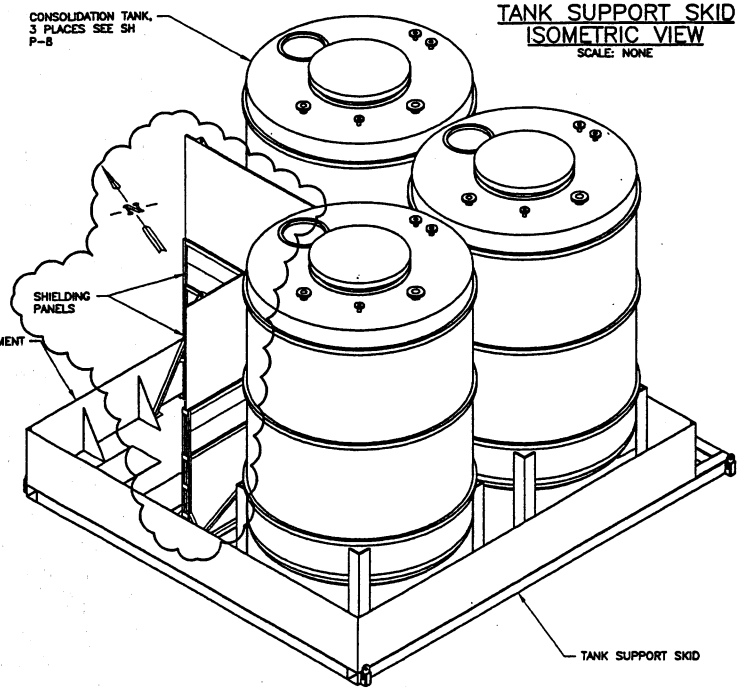


TANK, CONTAINMENT PAN, AND TANK SUPPORT SKID
ISOMETRIC VIEW
SCALE: NONE

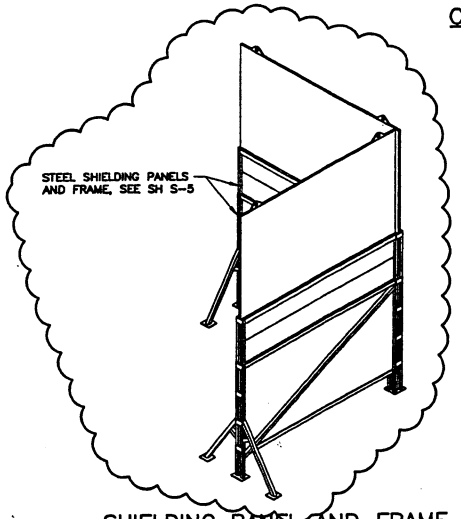


SHIELDING PANEL AND FRAME
ISOMETRIC VIEW
SCALE: NONE

## NOTES

1. CONSOLIDATION TANKS ARE NOT ATTACHED TO THE CONTAINMENT PAN. LOCATION GUIDES AS SHOWN ON SH S-4 ARE USED TO POSITION TANKS IN CONTAINMENT PAN.
2. CONTAINMENT PAN SHALL BE WELDED TO THE TANK SUPPORT SKID AS INDICATED ON SH S-2.
3. SUPPORT FRAME FOR SHIELDING PANELS IS DESIGNED TO ALLOW SHIELDING PANELS TO BE LIFTED IN AND OUT OF FRAME. FRAME SHALL BE WELDED TO THE CONTAINMENT PAN AS INDICATED ON SH S-4 AFTER PAN HAS BEEN MOUNTED ON SKID.
4. THE TANK SUPPORT SKID AND CONTAINMENT PAN ARE NOT DESIGNED TO BE LIFTED WITH CONSOLIDATION TANKS AND SHIELDING PANELS.

PROFESSIONAL ENGINEER REGISTERED 5629 STATE OF IDAHO RANDY F. LIPPERT

| | | |
|---|---|---|
| FOR DRAWING INDEX SEE DRAWING NO. 628443 | SUBCONTRACT NO. N/A | INEEL Idaho National Engineering & Environmental Laboratory BECHTEL BWXT IDAHO, LLC |
| NO SCALE | REQUESTER: G. Mc DANNEL<br>DESIGN: R.F. Lippert<br>DRAWN: S.Kuttlerer<br>PROJECT NO. 22901<br>SPCL CODE | TAN<br>TSF-09/18 V-TANKS REMEDIATION<br>ISOMETRIC VIEWS |
| DESIGN PHASE: AFC<br>SAFETY CATEGORY: CG | FOR REVIEW/APPROVAL SIGNATURES SEE DAR NO. 113657<br>EFFECTIVE DATE: 7/15/04 | SIZE D; CAGE CODE 01MF3; INDEX CODE NUMBER AREA 034, TYPE 1748, G 61, ORG 090; DWG- 628462; REV 1<br>SCALE: NOTED; SHEET S-1 |

628462-1.dwg
Date: 10/20/04 - 10:18 AM Layout Name: S-01
Tab: 8 Design/Computed Dwg/Model
ID: IEA
K:\TAN WAC-1 V-Tanks Phase II
PVT-DI-REV 3.4

143/

| REVISIONS | | |
|---|---|---|
| REV | DESCRIPTION | EFFECTIVE DATE: |
| 1 | SEE DAR-116001 | |

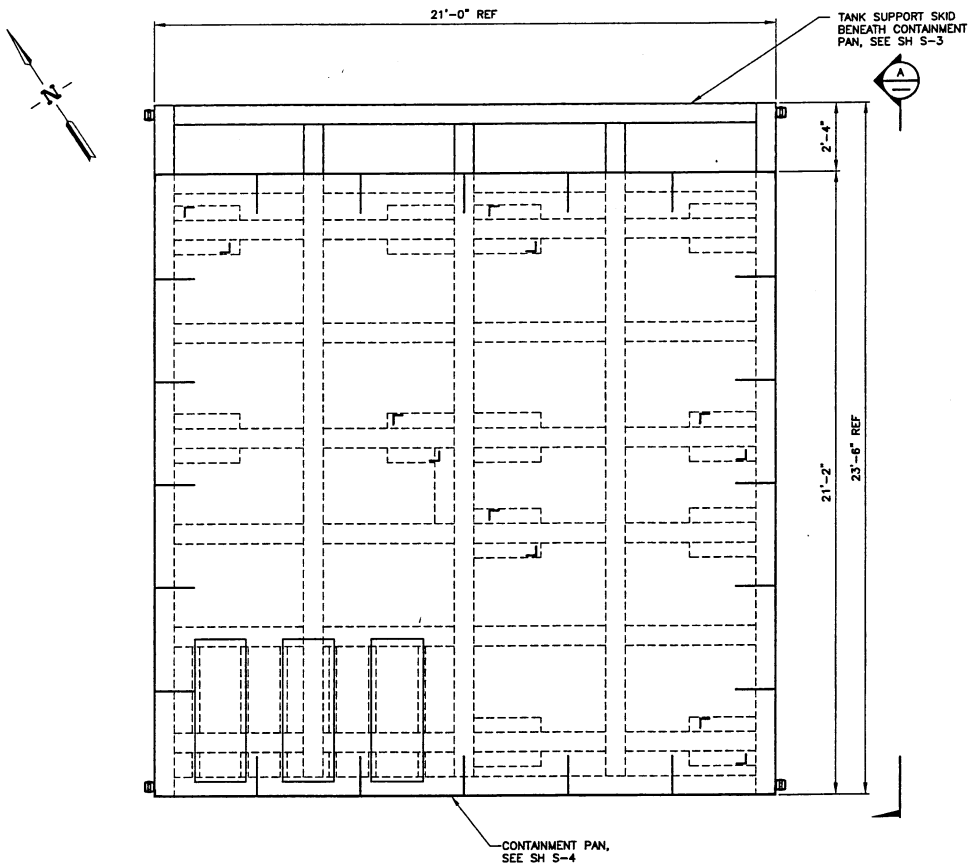


TANK SUPPORT SKID AND CONTAINMENT PAN PLAN
SCALE: 1/2"=1'-0"

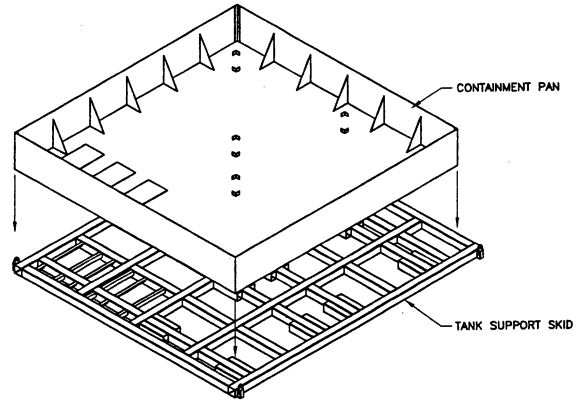


EXPLODED ISOMETRIC VIEW
SCALE: NONE

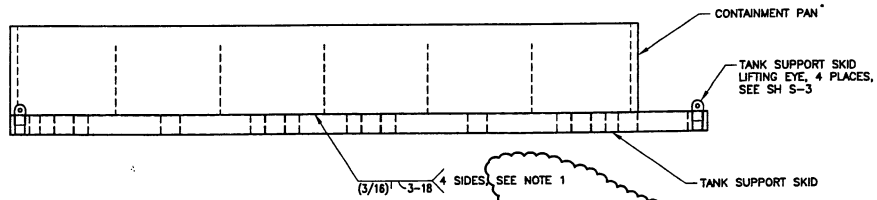


VIEW A
SCALE: 1/2"=1'-0"

NOTES

1. TACK WELD PAN BOTTOM TO SKID AS REQUIRED TO ELIMINATE BUBBLING OF PAN BOTTOM.

PROFESSIONAL ENGINEER REGISTERED 5629 STATE OF IDAHO RANDY F. LIPPERT

| | | |
|---|---|---|
| FOR DRAWING INDEX SEE DRAWING NO. 628443 | SUBCONTRACT NO. N/A | INEEL (Idaho National Engineering & Environmental Laboratory) BECHTEL BWXT IDAHO, LLC |
| SCALE: 1/2" = 1'-0" | REQUESTER: G. Mc DANNEL<br>DESIGN: R.F. Lippert<br>DRAWN: S.Kutterer<br>PROJECT NO. 22901<br>SPCL CODE | TAN<br>TSF-09/18 V-TANKS REMEDIATION<br>TANK SUPPORT SKID AND CONTAINMENT PAN<br>PLAN AND VIEWS |
| DESIGN PHASE: AFC | FOR REVIEW/APPROVAL SIGNATURES SEE DAR NO. 113657 | SIZE D; CAGE CODE 01MF3; INDEX CODE NUMBER AREA 034, TYP. 1748, CL 61, ORG 090; DWG- 628463; REV 1 |
| SAFETY CATEGORY: CG | EFFECTIVE DATE: 7/15/04 | SCALE: NOTED; SHEET S-2 |

FWT-01-REV 3.4

File: 628463-1.dwg Path: K:\TAN WAG-1 V-Tanks Phase I Title II Design\Controlled DWG\ROUND2 Date: 10/28/04 - 3:15 P.M. Layout Name: S-02 ID: KJ1

144/

| REVISIONS | | |
|---|---|---|
| REV | DESCRIPTION | EFFECTIVE DATE: |
| 1 | SEE DAR-116001 | |

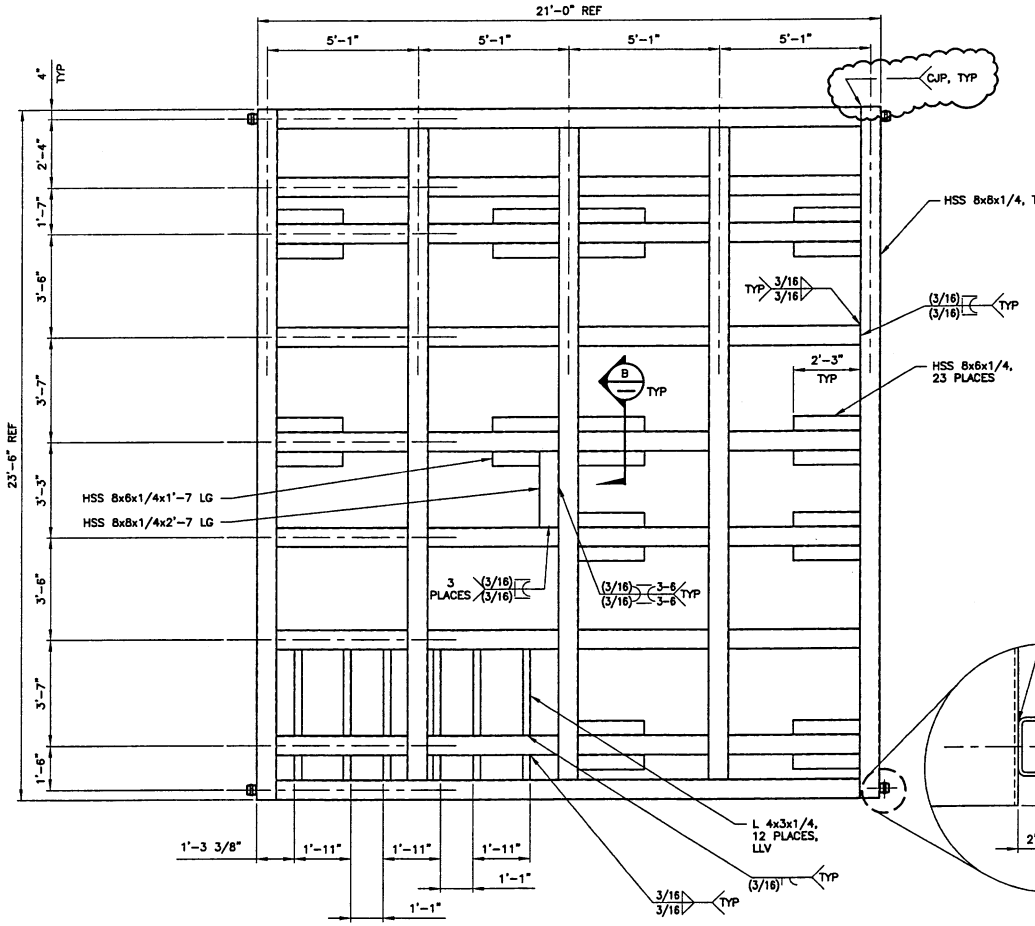


TANK SUPPORT SKID PLAN
SCALE: 1/2"=1'-0"

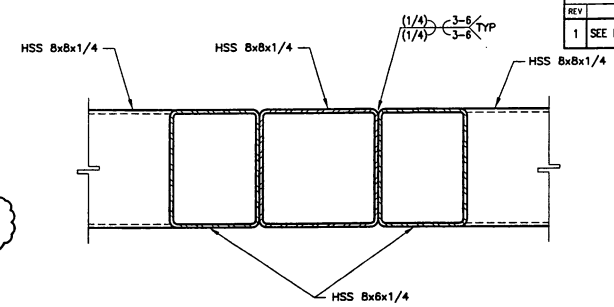


SECTION B
SCALE: 3"=1'-0

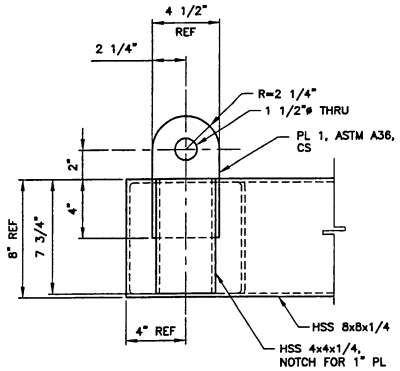


VIEW C
SCALE: 3"=1'-0"

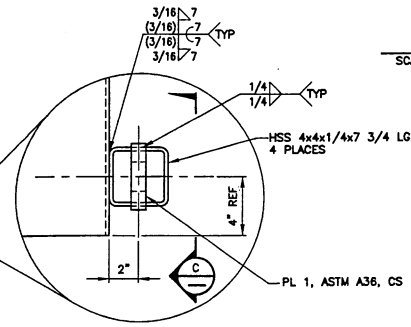


| MATERIAL LIST | | |
|---|---|---|
| MATERIAL | QUANTITY | LENGTH |
| HSS 8x8x1/4 | 2 | 23'-6" |
| " | 3 | 22'-2" |
| " | 2 | 19'-8" |
| " | 28 | 4'-5" |
| " | 1 | 2'-7" |
| HSS 8x6x1/4 | 23 | 2'-3" |
| HSS 8x6x1/4 | 1 | 1'-7" |
| L 4x3x1/4 | 6 | 2'-11" |
| " | 6 | 10" |
| HSS 4x4x1/4 | 4 | 7 3/4" |
| PL 1x4 1/2x8 1/4 | 4 | – |

PROFESSIONAL ENGINEER REGISTERED 5629 STATE OF IDAHO RANDY F. LIPPERT

| | | |
|---|---|---|
| FOR DRAWING INDEX SEE DRAWING NO. 628443 | SUBCONTRACT NO. N/A | INEEL BECHTEL BWXT IDAHO LLC |
| SCALE: 1/2" = 1'-0" | REQUESTER: G. Mc DANNEL | TAN |
| SCALE: 3" = 1'-0" | DESIGN: R.F. Lippert | TSF-09/18 V-TANKS REMEDIATION |
| | DRAWN: S.Kutterer | TANK SUPPORT SKID PLAN, SECTION, AND VIEW |
| | PROJECT NO. 22901 | |
| | SPCL CODE | SIZE D · CAGE CODE 01MF3 · WBS CODE NUMBER AREA 034 TYPE 17 SI 48 DRG 61 090 · DWG- 628464 · REV 1 |
| DESIGN PHASE: AFC | FOR REVIEW/APPROVAL SIGNATURES SEE DAR NO. 113657 | SCALE: NOTED · SHEET S-3 |
| SAFETY CATEGORY: CG | EFFECTIVE DATE: 7/15/04 | |

File: 628464-1.dwg Path: K:\TAN WAG-1 V-Tanks Phase 1 Title II Design\Controlled DWG\ROUND2 Date: 10/28/04 – 3:17 P.M. Layout Name: S-03 ID: K41

145/

| REVISIONS | | |
|---|---|---|
| REV | DESCRIPTION | EFFECTIVE DATE: |
| 1 | SEE DAR-114333 | 8/23/04 |
| 2 | SEE DAR-116001 | |

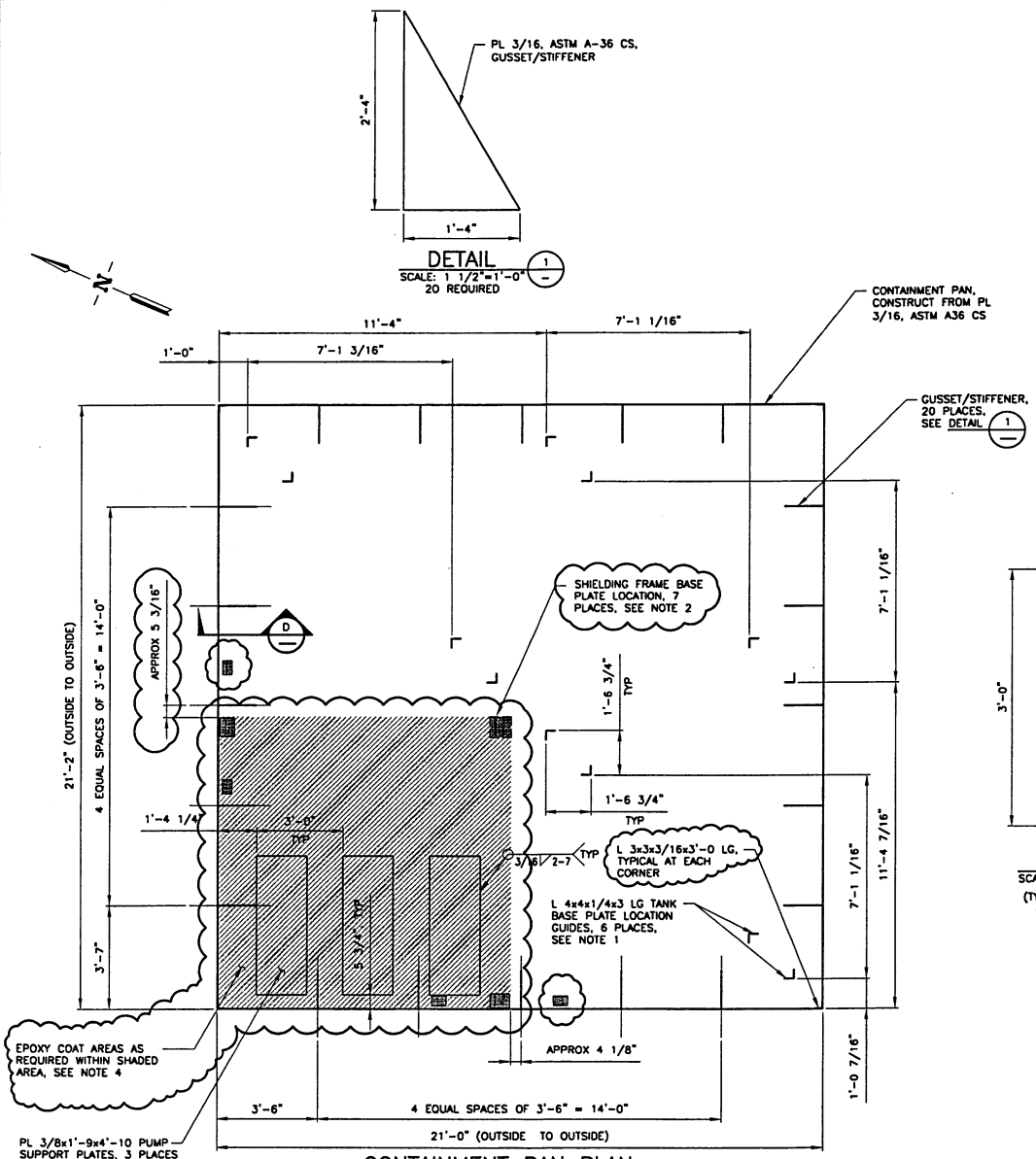


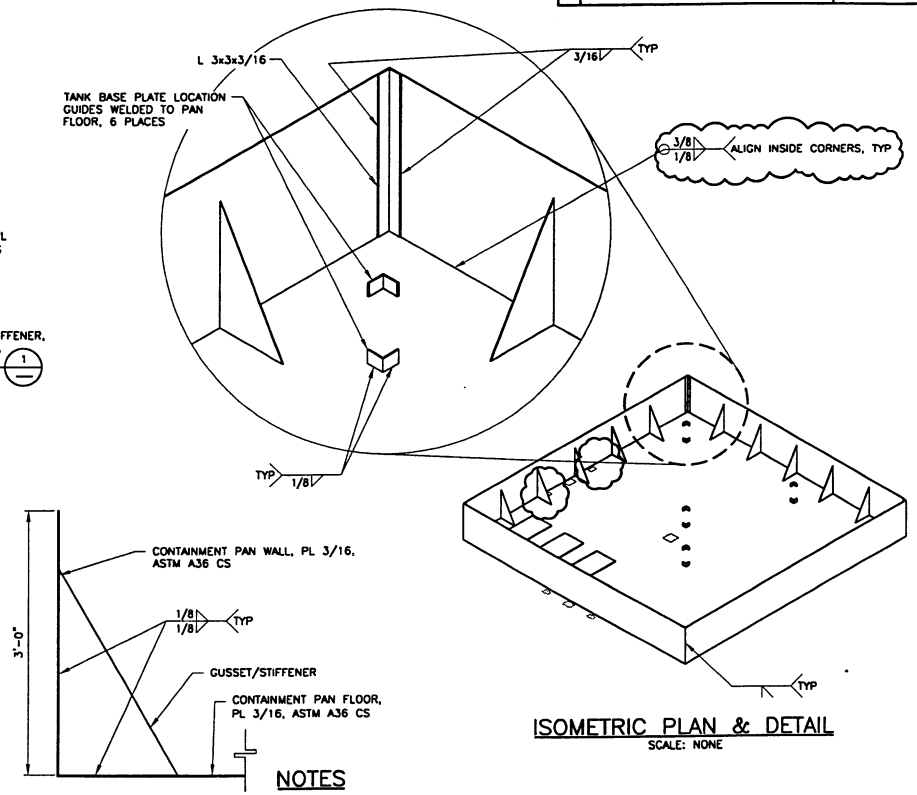


## NOTES

1. TANK BASE PLATE GUIDE LOCATIONS ARE BASED ON 1'-6" SQUARE TANK BASE PLATES AND PRELIMINARY TANK INFORMATION. LOCATIONS OF THE GUIDES SHALL BE ADJUSTED AS REQUIRED IF THE DIMENSIONS AND/OR LOCATIONS OF THE BASE PLATES DIFFER. COORDINATE PLACEMENT OF THE GUIDES WITH FINAL TANK BASE PLATE DIMENSIONS AND LOCATIONS.
2. SHIELDING SUPPORT FRAME BASE PLATES SHALL BE SECURED IN PLACE AFTER PLACEMENT OF CONTAINMENT PAN IN FIELD, SECURE WITH A 3/16 FILLET WELDS 1 1/2" LONG 3" OC, ALL AROUND EACH BASE PLATE. SEE SH S-5 FOR SHIELDING SUPPORT FRAME.
3. PLATES USED IN THE FABRICATION OF PAN SHALL BE FASTENED TOGETHER USING A FULL PENETRATION GROOVE WELD (SEAL WELD) AND GROUND SMOOTH.
4. COAT AREAS AS REQUIRED WITH CARBOGUARD 890LT EPOXY COATING BY "CARBOLINE COMPANY". APPLY ONE COAT AS PRIMER AND ONE COAT AS FINISH, USING MANUFACTURER'S RECOMMENDED THICKNESS. PREPARE SURFACES TO BE COATED AS RECOMMENDED BY THE MANUFACTURER.

PROFESSIONAL ENGINEER REGISTERED 5639 STATE OF IDAHO RANDY F. LIPPERT

| | | |
|---|---|---|
| FOR DRAWING INDEX SEE DRAWING NO. 628443 | SUBCONTRACT NO. N/A | INEEL Bechtel BWXT Idaho, LLC |
| SCALE: 1/2" = 1'-0" | REQUESTER: G. Mc DANNEL | TAN |
| SCALE: 1 1/2" = 1'-0" | DESIGN: R.F. Lippert | TSF-09/18 V-TANKS REMEDIATION |
| | DRAWN: S.Kutterer | CONTAINMENT PAN PLANS, SECTION, AND DETAILS |
| | PROJECT NO. 22901 | |
| | SPCL CODE | |
| DESIGN PHASE: AFC | FOR REVIEW/APPROVAL SIGNATURES SEE DAR NO. 113657 | SIZE D; CADD CODE 01MF3; INDEX CODE NUMBER AREA 034, TYPE 1748, CL 61, DISC 090; DWG-628465; REV 2 |
| SAFETY CATEGORY: CG | EFFECTIVE DATE: 7/15/04 | SCALE: NOTED; SHEET S-4 |

File: 628465_2.dwg Path: K:\TAN WAC-1 V-Tanks Phase I Files & Design\Controlled Dwgs\Rlsd\KZ1 Date: 11/15/04 - 11:27 AM Layout Name: S-04 ID: KJ1

146/

| REVISIONS | | |
|---|---|---|
| REV | DESCRIPTION | EFFECTIVE DATE: |
| 1 | SEE DAR-116001 | |

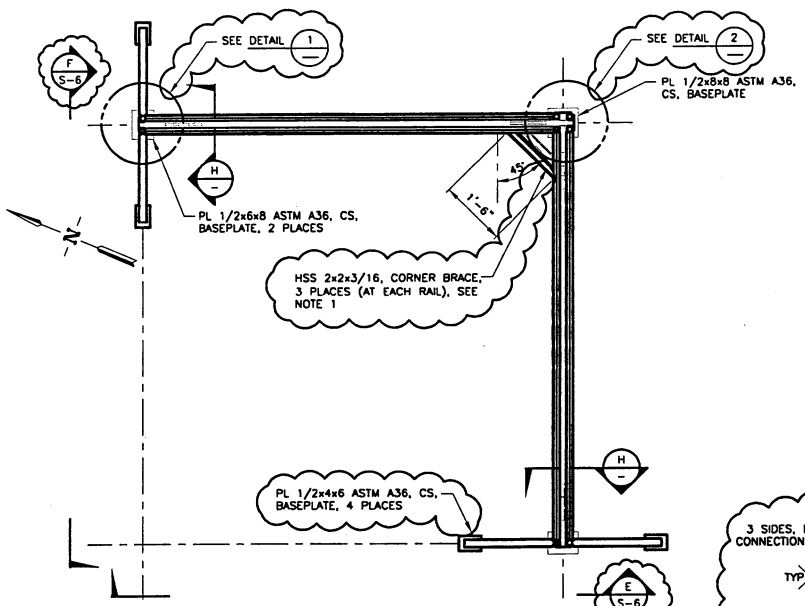


STEEL SHIELDING PANEL AND FRAME PLAN

SCALE: 1/2"=1'-0"

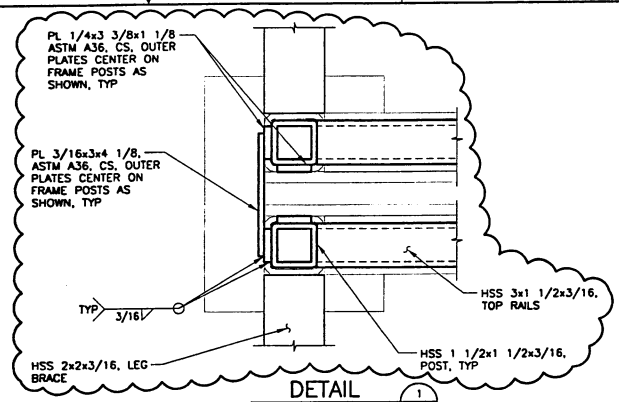


DETAIL 1

SCALE: HALF

SHIELDING PANEL NOT SHOWN FOR CLARITY

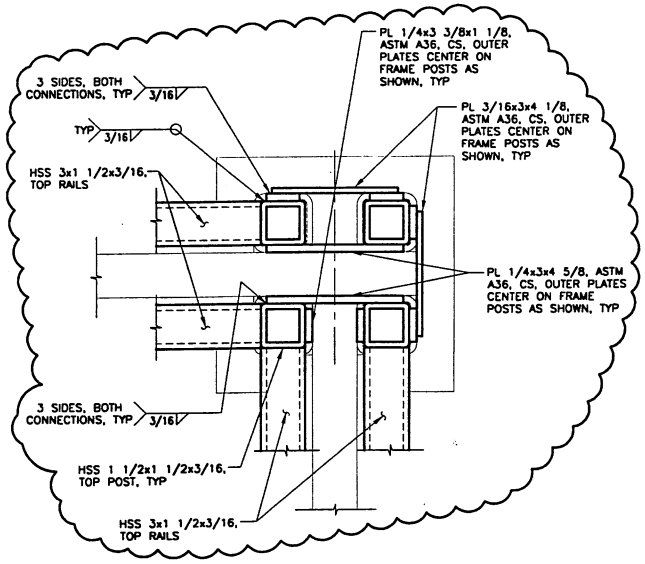


DETAIL 2

SCALE: HALF

SHIELDING PANEL NOT SHOWN FOR CLARITY

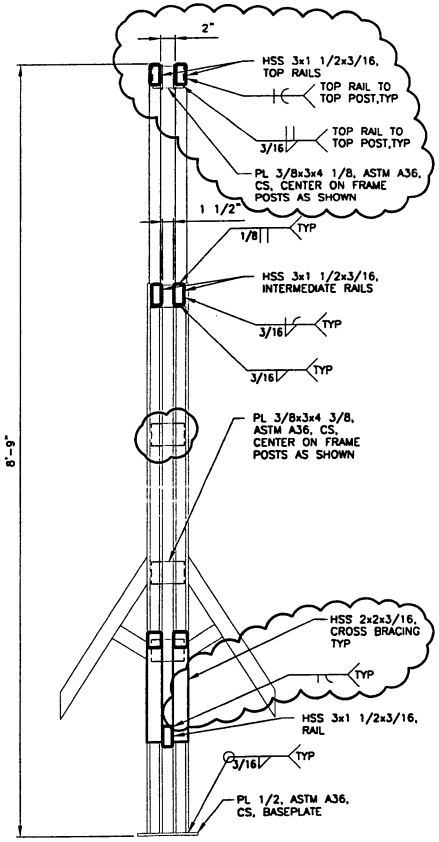


SECTION H H

SCALE: HALF

SHIELDING PANEL NOT SHOWN FOR CLARITY

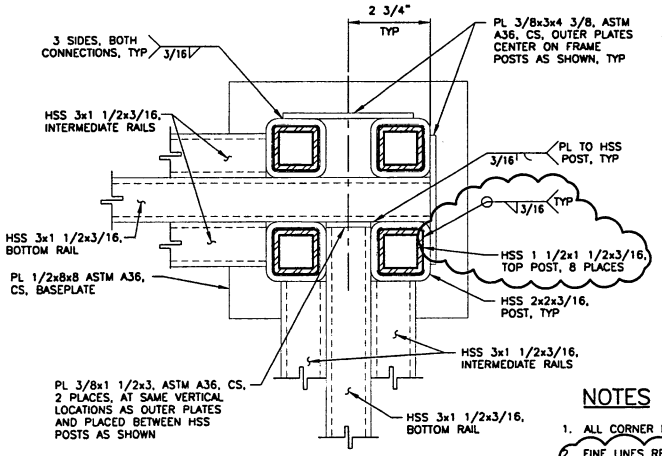


SECTION J

SCALE: HALF

SHIELDING PANEL NOT SHOWN FOR CLARITY

## NOTES

1. ALL CORNER BRACES SHALL BE 1'-6" LONG ON THE SHORT SIDE.
2. FINE LINES REPRESENT PREVIOUS FABRICATION ON ORIGINAL RELEASE. BOLD LINES REPRESENT ADDITIONAL FABRICATION REQUIRED. DETAILS AND VIEWS HAVE BEEN REARRANGED OR MOVED TO SH S-6 & S-7 TO ACCOMODATE NEW DESIGN.

PROFESSIONAL ENGINEER REGISTERED 5629 STATE OF IDAHO RANDY F. LIPPERT

| | | |
|---|---|---|
| FOR DRAWING INDEX SEE DRAWING NO. 628443 | SUBCONTRACT NO. N/A | INEEL (Lockheed Martin Idaho Technologies Company) BECHTEL BWXT IDAHO, LLC |
| SCALE: 1/2" = 1'-0" | REQUESTER: G. Mc DANNEL | TAN |
| SCALE: 3" = 1'-0" | DESIGN: R.F. Lippert | TSF-09/18 V-TANKS REMEDIATION |
| DESIGN PHASE: AFC | DRAWN: S.Kutterer | STEEL SHIELDING PLAN, SECTIONS, AND DETAIL |
| SAFETY CATEGORY: CG | PROJECT NO. 22901 | SIZE D; CAGE CODE 01MF3; INDEX CODE NUMBER AREA 034 TYP 1748 CI 61 ORIG 090; DWG-628466; REV 1 |
| | SPCL CODE | SCALE: NOTED; SHEET S-5 |
| | FOR REVIEW/APPROVAL SIGNATURES SEE DAR NO. 113657 | |
| | EFFECTIVE DATE: 7/15/04 | |

File: 628466-1.dwg Path: K:\TAN WAG-1 V-Tanks Phase 1 Title II Design\Contained DWG\ROUND2 Date: 10/28/04 - 4:08 P.M. Layout Name: S-5 ID: KJ1

147/

25A

| REVISIONS | | |
|---|---|---|
| REV | DESCRIPTION | EFFECTIVE DATE |

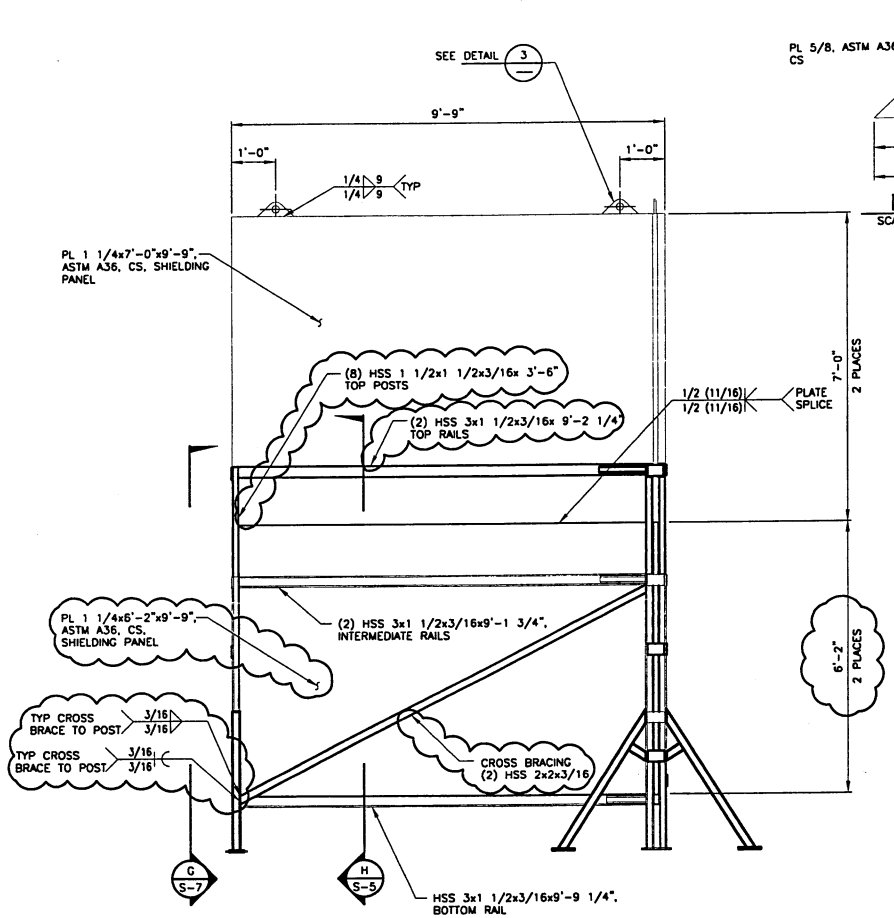


VIEW E S-5
SCALE: 1/2"=1'-0"

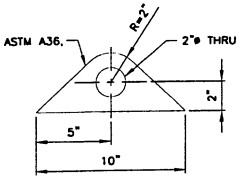


DETAIL 3
SCALE: 3"=1'-0"

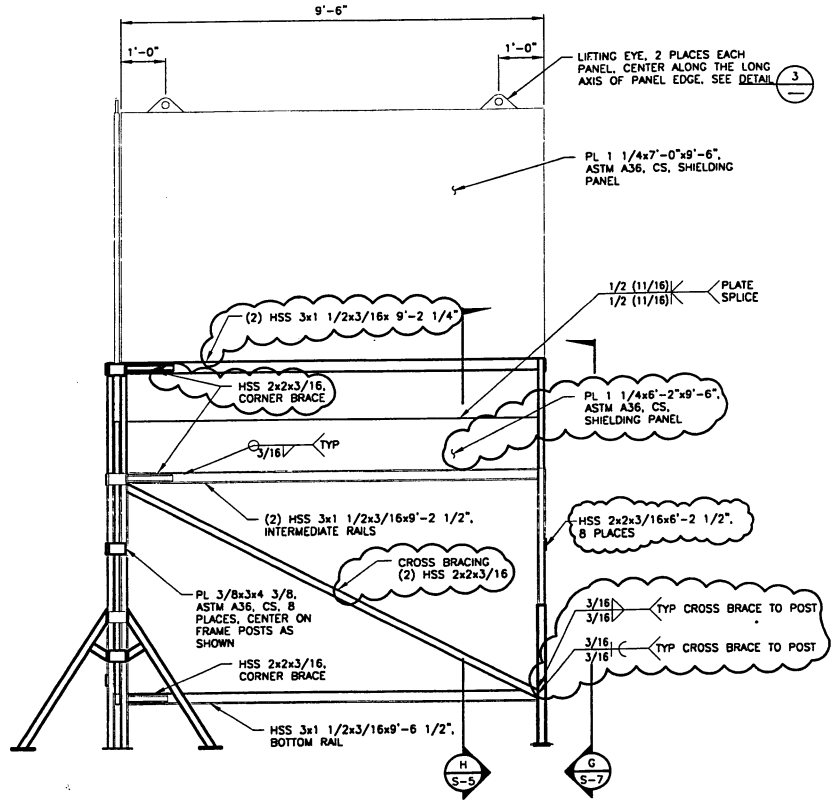


VIEW F S-5
SCALE: 1/2"=1'-0"

## NOTES

1. THIS DRAWING WAS DEVELOPED FROM DRAWING 628466. CLOUDING REPRESENTS ADDITIONAL FABRICATION REQUIRED FROM ORIGINAL RELEASE OF DRAWING 628466.
2. FINE LINES REPRESENT PREVIOUS FABRICATION ON ORIGINAL RELEASE. BOLD LINES REPRESENT ADDITIONAL FABRICATION REQUIRED. DETAILS AND VIEWS HAVE BEEN REARRANGED OR MOVED TO SH S-6 & S-7 TO ACCOMODATE NEW DESIGN.

PROFESSIONAL ENGINEER REGISTERED 5629 STATE OF IDAHO RANDY F. LIPPERT

| | | |
|---|---|---|
| FOR DRAWING INDEX SEE DRAWING NO. 628443 | SUBCONTRACT NO. N/A | INEEL (Idaho National Engineering & Environmental Laboratory) BECHTEL BWXT IDAHO, LLC |
| SCALE: 1/2" = 1'-0" | REQUESTER: C. Mc DANNEL | TAN |
| SCALE: 3" = 1'-0" | DESIGN: R.F. Lippert | TSF-09/18 V-TANKS REMEDIATION |
| | DRAWN: B.SEARLE | STEEL SHIELDING VIEWS |
| | PROJECT NO. 22901 | |
| | SPCL CODE | |
| DESIGN PHASE: AFC | FOR REVIEW/APPROVAL SIGNATURES SEE DAR NO. 116007 | SIZE D; CAGE CODE 01MF3; INDEX CODE NUMBER AREA 034, TYPE 1748, CL 61, ORG. 090; DWG- 629013; REV |
| SAFETY CATEGORY: CG | EFFECTIVE DATE: 7/15/04 | SCALE: NOTED; SHEET S-6 |

File: 629013.dwg Path: K:\TAN WAG-1 V-Tanks Phase I Title II Design\Controlled DWG\ROJR02 Date: 10/28/04 – 4:10 P.M. Layout Name: 629013 User ID: KJI

148/

25B

| REVISIONS | | |
|---|---|---|
| REV | DESCRIPTION | EFFECTIVE DATE: |

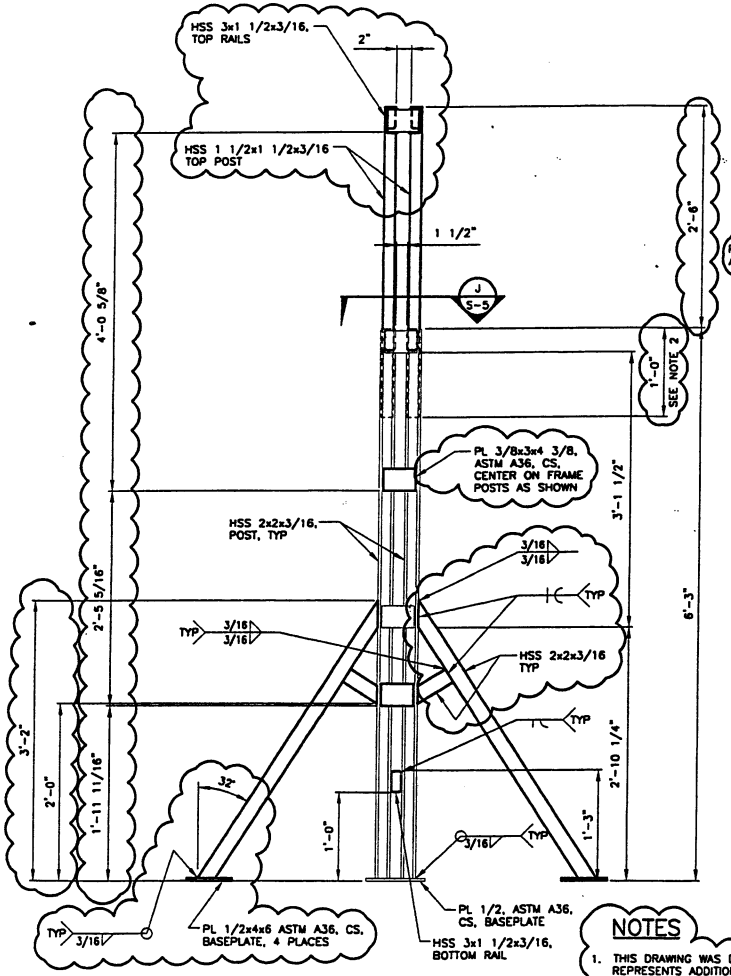


## SECTION G S-6

SCALE: 1 1/2"=1'-0"

SHIELDING PANEL NOT SHOWN FOR CLARITY

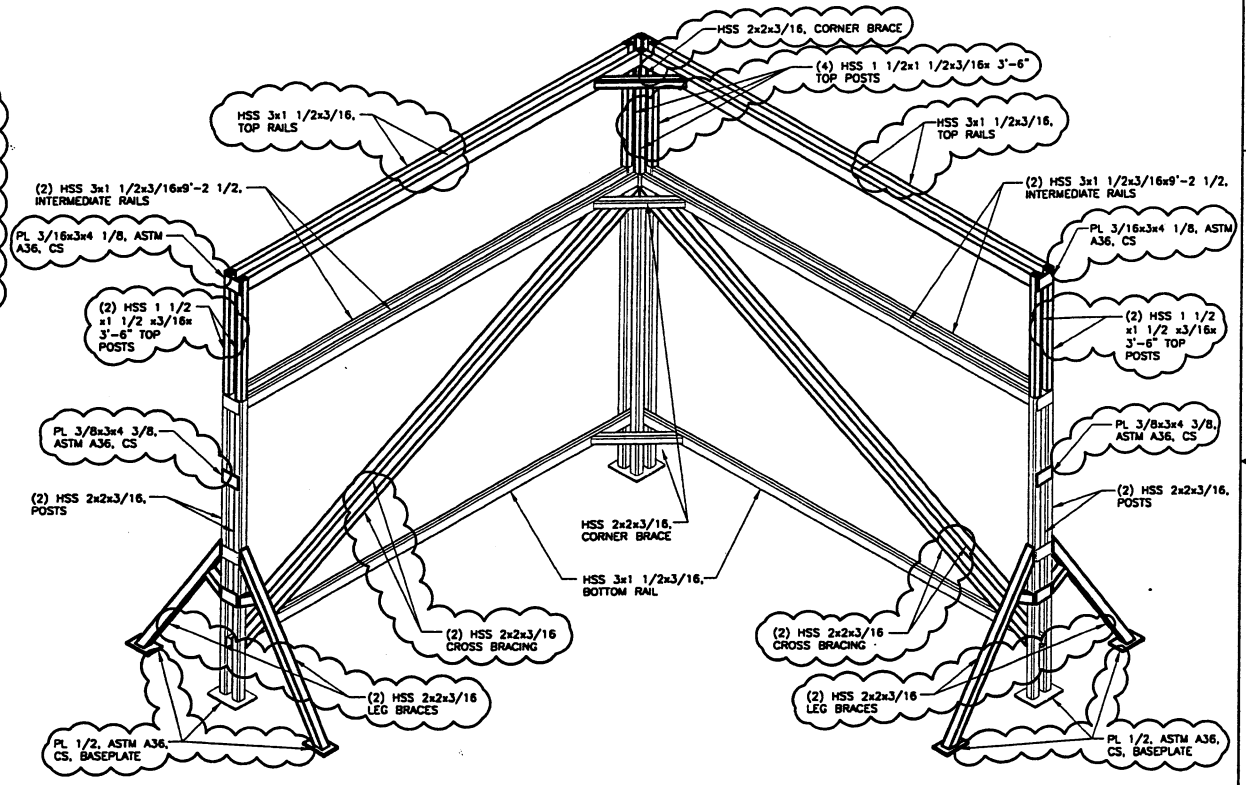


## ISOMETRIC VIEW

SCALE: NONE

SHIELDING PANEL NOT SHOWN FOR CLARITY

## NOTES

1. THIS DRAWING WAS DEVELOPED FROM DRAWING 628466. CLOUDING REPRESENTS ADDITIONAL FABRICATION REQUIRED FROM ORIGINAL RELEASE OF DRAWING 628466.
2. INSERT 1'-0" OF HSS 1 1/2x1 1/2x3/16 TOP POST INTO HSS 2x2x3/16 POST, 8 PLACES.
3. FINE LINES REPRESENT PREVIOUS FABRICATION ON ORIGINAL RELEASE. BOLD LINES REPRESENT ADDITIONAL FABRICATION REQUIRED. DETAILS AND VIEWS HAVE BEEN REARRANGED OR MOVED TO SH S-6 & S-7 TO ACCOMODATE NEW DESIGN.

PROFESSIONAL ENGINEER REGISTERED 5629 STATE OF IDAHO RANDY F. LIPPERT

| | |
|---|---|
| FOR DRAWING INDEX SEE DRAWING NO. 628443 | SUBCONTRACT NO. N/A |
| SCALE: 1/2" = 1'-0" | REQUESTER: C. Mc DANNEL |
| SCALE: 3" = 1'-0" | DESIGN: R.F. Lippert |
| | DRAWN: B.SEARLE |
| | PROJECT NO. 22901 |
| | SPCL CODE |
| DESIGN PHASE: AFC | FOR REVIEW/APPROVAL SIGNATURES SEE DAR NO. 116007 |
| SAFETY CATEGORY: CG | EFFECTIVE DATE: |

INEEL ARCHITECT-ENGINEER, LLC

TAN

TSF-09/18 V-TANKS REMEDIATION

STEEL SHIELDING SECTION AND ISOMETRIC VIEW

| SIZE | CAGE CODE | INDEX CODE NUMBER | | | | DWG-629014 | REV |
|---|---|---|---|---|---|---|---|
| | | ARE | TYP | LA | ORG | | |
| D | 01MF3 | 034 | 1748 | 61 | 090 | | |

SCALE: NOTED

SHEET S-7

Date: 10/18/04 - 4:25 P.M. | Layout Name: 629014
Path: K:\TAN WAG-1 V-Tanks Proj\Title II Design\Controlled DWG\ROUND2
Dr: SEA
File: 629014.dwg