Document ID: EDF-4672
Revision ID: 0
Effective Date: 09/16/04

Engineering Design File

PROJECT NO. 22901

TSF-09/18 V-Tank Contents Removal and Site Remediation-Sitework Design

Idaho National Engineering and Environmental Laboratory

Form 412.14
10/9/2003
Rev. 05

ENGINEERING DESIGN FILE

EDF No.: 4672 EDF Rev. No.: 0 Project File No.: 22901

1. Title: TSF-09/18 V-Tank Contents Removal and Site Remediation-Sitework Design

2. Index Codes:
Building/Type N/A SSC ID TAN-616 Site Area TAN

3. NPH Performance Category: _____ or ☒ N/A

4. EDF Safety Category: CG or ☐ N/A SCC Safety Category: CG or ☐ N/A

5. Summary:
This EDF is limited to the civil site work associated with the V-Tanks remediation project. The sitework includes the excavation plans, staging pile design, shoring designs, site demolition requirements, final site grading, and tank removal options.

6. Review (R) and Approval (A) and Acceptance (Ac) Signatures:
(See instructions for definitions of terms and significance of signatures.)

	R/A	Typed Name/Organization	Signature	Date
Performer/ Author	N/A	P. W. Bragassa, P. E. /3K16	Pat Bragassa	9-1-04
Technical Checker	R	J. C. Hurst, P. E. /3K16	JC Hurst Per Telecon PWBragassa	9-1-04
Independent Peer Reviewer (if applicable)	A			
Approver				
Requestor (if applicable)	R	G. E. McDannel/3CH0	RKT G. E. McDannel	9/9/04 9/9/04
Design Supervisor	A	V. J. Balls, P. E. /3K16	Vonbel Balls	9/1/04
Project Engineer	A	N. K. Rogers/3K16	Mark T. Brooks for NKR	9/15/04
System Engineer	R	G. G. Anderson/3CH0	Larry Anderson	9/2/04
Doc. Control		BECKY METCALF	Becky Metcalf	9-16-04

7. Distribution: (Name and Mail Stop)

8. Does document contain sensitive unclassified information? ☐ Yes ☒ No
If Yes, what category:

9. Can document be externally distributed? ☒ Yes ☐ No

10. Uniform File Code: 8201 Disposition Authority: A17-31-a-1
Record Retention Period: Until dismantlement or disposal of facility, equipment, system or process; or when superceded or obsolete

11. For QA Records Classification Only: ☐ Lifetime ☐ Nonpermanent ☐ Permanent
Item and activity to which the QA Record apply:

12. NRC related? ☐ Yes ☒ No

ENGINEERING DESIGN FILE

EDF No.: 4672 EDF Rev. No.: 0 Project File No.: 22901

1. Title: TSF-09/18 V-Tank Contents Removal and Site Remediation-Sitework Design
2. Index Codes:
   Building/Type N/A SSC ID TAN-616 Site Area TAN

13. Registered Professional Engineer's Stamp (if required)

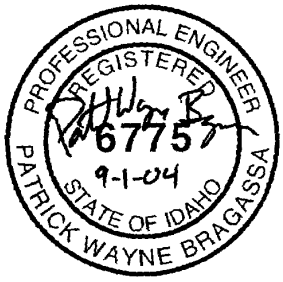

CONTENTS

1. PURPOSE 4

2. SCOPE 4

3. CONCLUSIONS/RESULTS 5

4. SAFETY CATEGORY 7

5. NATURAL PHENOMENA HAZARDS PERFORMANCE CATEGORY 7

6. STRUCTURE SYSTEM OR COMPONENT DESCRIPTION 7

7. DESIGN LOADS 7

8. ASSUMPTIONS 7

9. REFERENCES 8

Appendix A—Excavation Design A-1

Appendix B—Tank Lifting Analysis B-1

Appendix C—Tank Rigging and Lifting Design C-1

Appendix D—Selected Design Drawings D-1

TSF-09/18 V-Tank Contents Removal and Site Remediation-Sitework Design

1. PURPOSE

The purpose of this project is the removal, treatment, packaging and disposal of contents from Technical Support Facility (TSF)-09 Tanks V-1, V-2 and V-3, and V-9 all of which are located east of Test Area North (TAN)-616. In addition, the empty tanks and contaminated soils around the tanks will be disposed of. This project is in support of the Operable Unit (OU) 1-10 remedial action activity and of the Idaho National Environmental and Engineering Laboratory (INEEL) Environmental Remediation of the TAN V-Tanks.

To accomplish this project, the following activities will be conducted:

- Perform necessary excavations and activities for accessing and removing the V-Tanks as well as removing the ancillary piping.
- Disposition of contaminated soils and ancillary equipment.
- Slurry/mix the liquid and sludge waste in each V-Tank and remove this waste from the V-Tanks into new treatment tanks.
- Treat the tank waste to meet the INEEL CERCLA Disposal Facility (ICDF) Waste Acceptance Criteria (WAC).
- Cleaning, cutting/modifying the tanks as necessary, and removing the empty tanks for future disposal at the ICDF.
- Transport the tanks to ICDF.
- Performing post-remediation sampling at the bottom of the excavation to verify that final remediation goals (FRGs) are met and excavation of remaining contaminated soils.
- Filling the excavated area with clean soil, contouring, and grading to surrounding soil.
- Implementing institutional controls consisting of signs and any fixed access control. Land use restrictions established and maintained are dependent on the results of the sampling or characterization/profiling activities.

2. SCOPE

The scope of this Engineering Design File (EDF) is limited to the civil site work associated with the remediation project. The site work includes the excavation plans, staging pile design, shoring designs (as needed), site demolition requirements, final site grading, and tank removal options.

Specific scope addressed by this EDF includes:

- Design details for the three proposed phases of excavation:

- Phase I: Excavation to allow transfer of tank contents to new storage tanks. Soil will be excavated and removed down to the top of the tanks (approximately 11 ft). All V-tank piping will be exposed and removed for disposal. Soil removed during this phase will be stockpiled in a staging area for future disposal, or reuse as determined by sampling analysis.

- Phase II: Excavate and remove soil as required to allow removal of the four V-Tanks. Tanks shall be rigged and removed from excavation, and stored at a temporary staging area. Soil removed during this phase will be stockpiled in a staging area for future disposal, or reuse as determined by sampling analysis.

- Phase III: Phase III consists of the work to excavate and remove any additional contaminated soils identified exceeding the remediation limits (23.3 pCi/g Cs^{137}).

- Site Reclamation: Final site reclamation will include backfilling excavations with clean fill, compaction, contouring, and reseeding.

- Staging Pile Design: Design the staging pile for the temporary storage of soil material to be disposed of at the INEEL CERCLA Disposal Facility (ICDF).

- Shoring Design: Analyze the excavation limits to determine the need for shoring for the protection of workers or the protection of adjacent facilities. The excavation shall not undermine the structural integrity of the adjacent structures.

- Tank Lifting Design: Determine the options available for the removal of the four tanks. Analysis shall as a minimum, determine the feasibility of lifting the tanks using available D&D cranes, recommend crane locations, and provide lifting restrictions. The analysis of the tanks for lifting is contained in Appendix B of this EDF and the rigging analysis and design is contained in Appendix C.

- Selected design drawings are included in Appendix D of this EDF for reference.

3. CONCLUSIONS/RESULTS

Excavation plans were developed for the three phases of excavation. Phase I will excavate the top of tanks V-1, V-2, V-3 and the sides of the excavation will be sloped at a 1-1/2 to 1 grade. The V-tank piping that originally connected to TAN-616 and was capped during demolition of that facility will be removed for disposal. The tank contents will then be transferred over to new storage and treatment tanks.

Upon completion of the contents removal, the pumping equipment will be removed and Phase II excavation work will remove the soil down to 2 ft above the bottom of the tanks. Vacuum excavation or similar method will be used to excavate access around the tanks for rigging installation. The tanks will be removed empty and placed into a staging area.

Phase III excavation work will be performed to remove the remaining contaminated soils determined by sampling analysis. Once the tanks are removed, sampling will determine the additional amount of soil to be removed and disposed of. The design presented in this EDF is based on the assumption that no soil beneath the tanks will be removed. Additional areas of excavation for Phase III is at the location of Valve Box # 2 north of the site and at a waste line connection previously removed

Soil removed from Phases I and II will be stored north of the work site in a designated staging area. Currently, the excavated soil is not planned to be used for back fill and will be disposed of at the ICDF in the future, but must be staged until that time. Phase III work will be performed by ICDF personnel and it is assumed that the material removed will be transported directly to the ICDF. The area north and west of the location of the Valve Box # 2 site was chosen for the staging area for several reasons. This location would allow staging of the soil with no impact on the remaining work to be performed. This site also allows ICDF personnel to load and transport the soil without interrupting operations at the remediation site.

The soil staging area was designed to allow for a minimum of 2300 cubic yards of soil to be stored. The design allows for 1.5 to 1 side slopes and will be covered with a 30 mil HDPE cover and sandbagged for ballast. Surface water run-on will be controlled by providing a soil berm and silt fence. The design was developed to meet the requirements of 40 CFR 264.554 “Staging Piles.” The staging area will not utilize a liner beneath the material, but will remediate the entire area upon removal of the stored soil.

Shoring Requirements: The buildings and structures adjacent to the remediation site (TAN-607 and TAN-633) are supported by a foundation system of reinforced concrete grade beams supported by drilled piers (piles). It was determined that the excavations for the three phases of work can be performed and sloped at a 1-1/2 to 1 angle without undermining the building piers. The grade beams of TAN-633 will be exposed during excavation, however the integrity of the foundation will not be impacted. The excavation will be restricted from extending beneath the bottom of the grade beam of any structure unless shoring is provided. The excavations as currently planned will not exceed this restriction, however, should the soil remediation phase require additional excavation beyond the limit determined, a shoring design was developed to allow deeper excavations.

Tank Lifting Analysis and Design: The three identical tanks: V-1, V-2, and V-3, are 10 ft in diameter and approximately 20 ft in length The thickness of the tanks was assumed as 1/4-in. stainless steel as defined in the original technical and functional requirements.

The weight of the tanks is estimated at 8,100 lb empty. The tanks will be lifted empty and set directly into a staging area until disposal at the ICDF.

Tank V-9 is 3 ft 6 in. in diameter and approximately 7 ft 3 in. in height with a conical bottom. The empty weight is estimated to be 1,100 lb, assuming a thickness of 1/4 in. If Tank V-9 was grouted solid, the total estimated weight would be 8,709 lb.

The depth of the excavation and corresponding back slope increases the crane reach radius significantly. Using the D&D Grove 120, it was determined that the tanks could be picked with the crane located on the north side of the excavation. A detailed lifting plan and crane placement plan are presented on drawings C-14, C-15 and C-16 of the design drawings. The crane used the for evaluation and lifting analysis is the Grove 9120 as requested by the TAN Facilities Hoisting and Rigging Subject Matter Expert. If this crane is not available at the time, the lifting plans shown are not valid and must be modified for the alternate crane. Appendix C contains the lifting and rigging analysis and design documentation.

The tanks were analyzed using a finite element computer software program, COSMOS/M, Version 2.85, and conservatively assumed a tank wall thickness of 1/8 in. to account for any possible corrosion. The analysis is contained in Appendix B of this EDF. The analysis determined a maximum stress of 5,500 psi during lifting of the tanks, located along the line of the slings. This stress is well below the yield stress of 25,000 psi for 304 L stainless steel. This provides a factor of safety of 4.5 to 1 on yielding. This indicates the tanks can be lifted safely.

4. SAFETY CATEGORY

The demolition work contained in this EDF is considered " Consumer Grade", as specified in the technical and functional requirements document (TFR-278). All design and construction will comply with the quality requirements specified for this level of safety category.

5. NATURAL PHENOMENA HAZARDS PERFORMANCE CATEGORY

The system is classified as safety category consumer grade (CG) in accordance with the requirements of management control procedure MCP-540 titled “Documenting the Safety Category of Structures, Systems, and Components.” The safety basis for performing V-tank remedial activities is documented in the “Safety Analysis Report for Test Area North Operations” (SAR-208). There are no special requirements regarding industrial or natural phenomena hazards. Normal industrial and environmental hazards will be routinely addressed per the work control process (the system performance category designation is PC 0).

6. STRUCTURE SYSTEM OR COMPONENT DESCRIPTION

The system is the temporary installation required for safely removing and treating the contents of Tanks V-1, V-2, V-3 and V-9 and preparing both the treated contents and empty tanks for disposal at the ICDF. The TAN remediation sites are known as TSF-09 (V-1, V-2, and V-3) and TSF –18 (V-9) at OU 1-10; these four tanks are commonly referred to as the V-Tanks. The remediation is being conducted in accordance with the *Final Record of Decision for Test Area North, Operable Unit 1-10* (DOE-ID 1999) referred to as the ROD, and any appropriate amendments. Tanks V-1, V-2, and V-3 are identical stainless steel 10,000 gal tanks 10 ft in diameter with a nominal 20 ft length, and located approximately 11 ft below grade. Tank V-9 is a stainless steel 400 gal tank 42 in. in diameter with a length of about 7.33 ft having a conical bottom, and located about 7 ft below grade.

7. DESIGN LOADS

Natural phenomena loads are not considered for this design. Material weight considered are as follows:

- Soil Density: 110 lb/ft^3 (silty soils)
- Tank Unit weight: 10.21 lb/ft^2 (based on 1/4-inch stainless steel)
- Grout: 130 lb/ft^3.

8. ASSUMPTIONS

- Site Conditions: Due to the ongoing TAN-616 demolition, there will most likely be some variance from the proposed site condition and the actual condition at the time of the work being performed. It is also assumed that the on-going demolition work being performed will be substantially completed to allow the V-tank excavation and remediation work to be performed as designed.

- Tanks are assumed to be not significantly corroded and can be verified prior to lifting. Lifting analysis assumed tank thickness of 1/8 in.

- It is assumed that the contents of the tanks can be removed and each tank cleaned to meet the waste acceptance criteria for the ICDF.

- Soil contamination limits are not expected to reach beyond the bottom of the tanks, however, if additional excavation is required, a shoring design was prepared and included in this EDF (see Appendix A).

9. REFERENCES

29 CFR 1926, 2004, "Safety and Health Regulations for Construction," Subpart P, Excavations, 1926.651, "Specific Excavation Requirements," *Code of Federal Regulations*, Office of the Federal Register, June 8, 2004.

40 CFR 264.554, 2004, " Standards for Owners and Operators of Hazardous Waste Treatment, Storage, and Disposal Facilities," Subpart S, Special Provisions for Cleanup, 554 " Staging Piles" *Code of Federal Regulations*, Office of the Federal Register, June 25, 2004

ACI 318-02, 2002, "Building Code Requirements for Structural Concrete," American Concrete Institute, January 1, 2002.

Bechtel Rigging Handbook, Bechtel Equipment Operations, Inc., 2nd Edition, 2002.

COSMOS/M, Version 2.85, Structural Research and Analysis Corporation, general finite element structural analysis program for the PC platform.

DOE/ID, 1999, *Final Record of Decision for Test Area North, Operable Unit 1-10*, DOE/ID-10682, Revision 0, U.S. Department of Energy Idaho Operations Office; U.S. Environmental Protection Agency, Region 10; and Idaho Department of Health and Welfare, Division of Environmental Quality, October 1999.

Geosystem SB-Slope, Slope Stability Analysis Program, Version 2.0, Van Gunten Engineering Software, Inc.

MCP-540, 2004, "Documenting the Safety Category of Structures, Systems, and Components," Rev. 14, *Manual 10A—Engineering and Research*, June 1, 2004.

Principles of Geotechnical Engineering, B.M. Das, 2nd Edition, PWS-Kent Publishing Co., 1985.

SAR-208, 2004, "Safety Analysis Report for Test Area North Operations," Rev. 0, January 8, 2004.

STAAD.Pro 2003. Release 2003, Research Engineers Incorporated, structural analysis program for the PC platform.

TFR-278, 2004, "Technical and Functional Requirements for Tank/Contents Removal and Site Remediation of V-Tanks, TSF-09 and TSF-18, Operable Unit 1-10" Revision 2, June 2004.

Appendix A

Excavation Design

This page intentionally left blank

V TANKS	2/04	P. Bragassa

EDF-4672

EXCAVATION DESIGN:

DETERMINE THE EFFECT THE EXCAVATION WILL HAVE ON Adjacent structures.
DESIGN SHORING IF Required.

- Soil is Class "C", Silty-clay
- WIND BLOWN LOESS ALSO.
- AREA Has been disturbed.

EXCAVATIONS will be sloped AT 1½ to 1 Back slope.

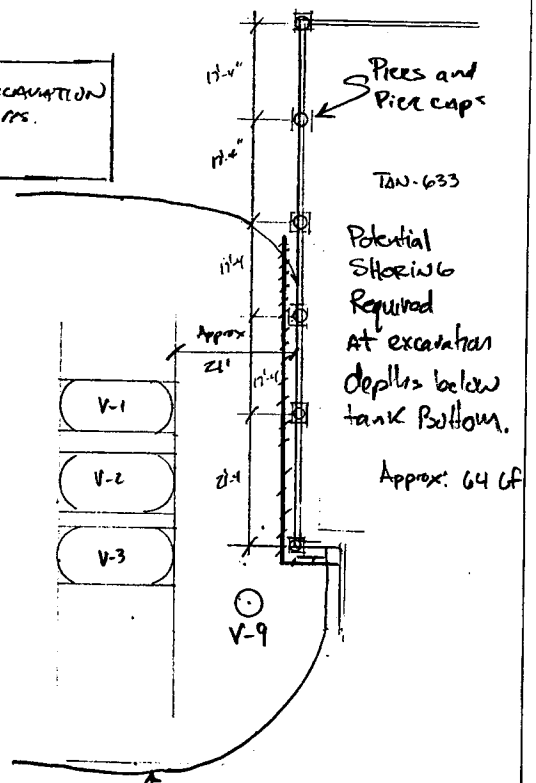

EXCAVATION Limits

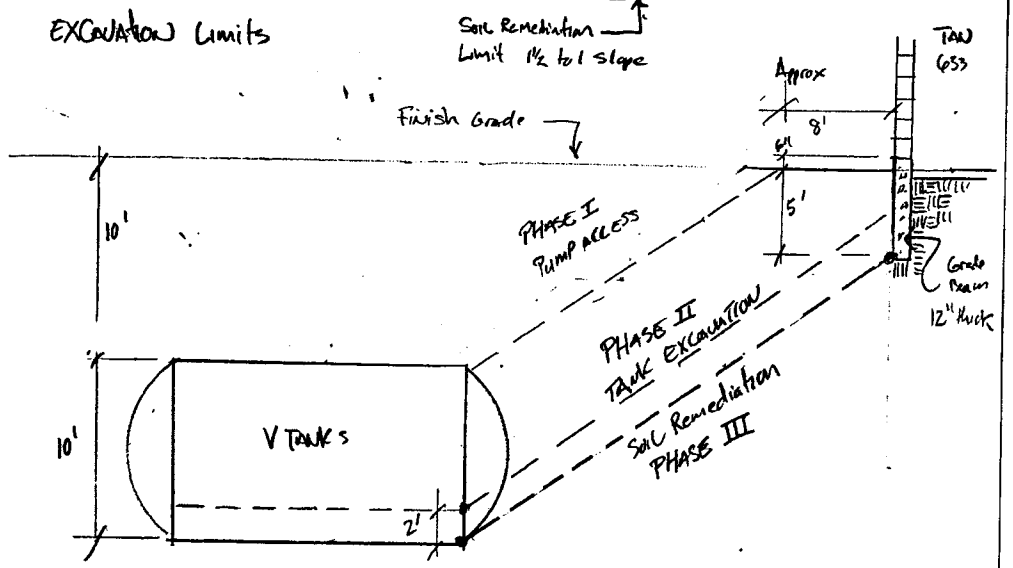

V-TANKS	2/04	P. BRAGASSA	A-7

EDF-4672

EXCAVATION SHORING:

Soil Silty-clay

$\gamma = 110$ pcf Assumed

$\phi = 30$ (Assumed)

Determine Lateral Forces From excavation.

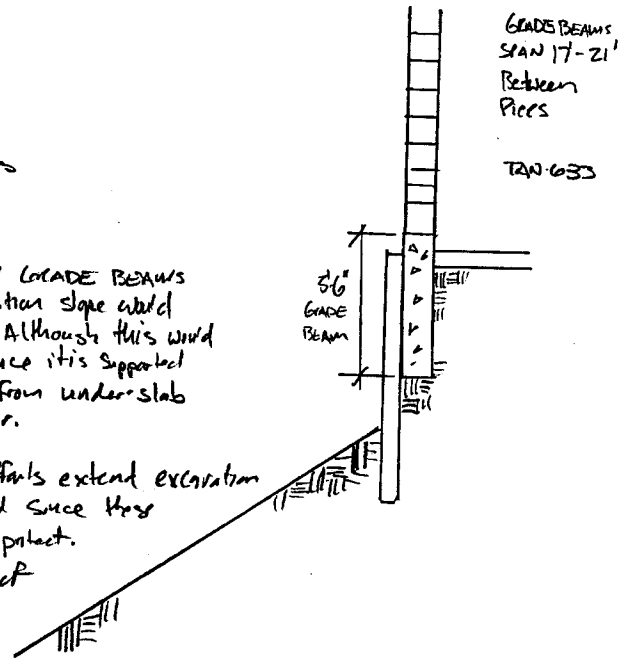

TAN-633 IS SUPPORTED BY GRADE BEAMS and Piers/Piles. Excavation slope would undermine Grade beam. Although this would not damage the building since it is supported by piers, sloughing of Soil from under-slab would be difficult to Repair.

-If Soil Remediation efforts extend excavation Piers could be exposed and since they are Friction Piles, need to protect.

∴ Determine a Method of Shoring.

8' Total:

$\gamma = 110$ pcf

$K_o = 1 - \sin\phi$

$= 1 - \sin 30 = .50$

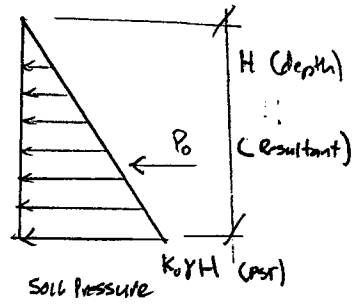

V TANKS	2/04	P. BKACASSA	A-

SHORING DESIGN:

EDF-4672

$K_o \gamma H_1 = (.5)(110)(4') = 220$

$K_o \gamma H_2 = (.5)(110)(8) = 440$

$AVG = \frac{220+440}{2} = 330$

Resultant acting at center
= 330 psf (4)
= 1320 pLF of wall

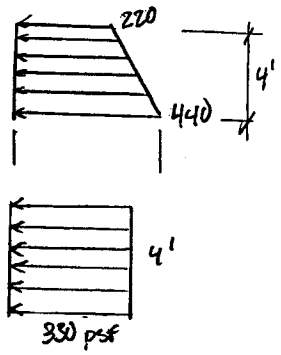

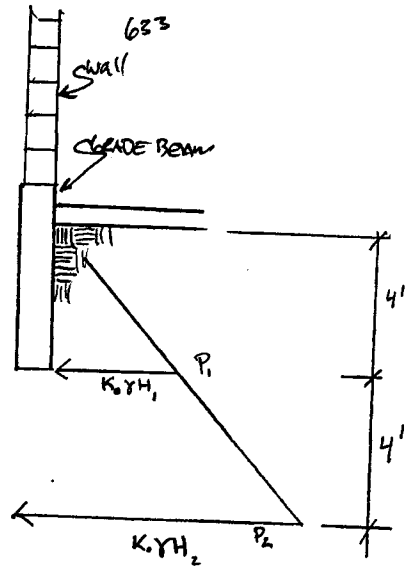

DESIGN SHORING to be supported off of GRADE BEAM

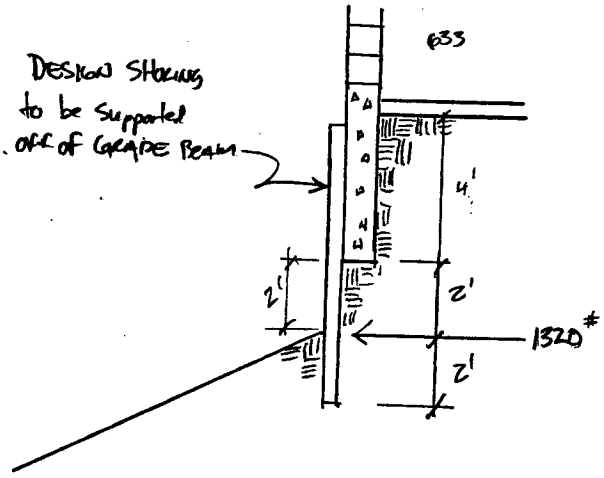

V TANKS	2/04	P. BKCASA	A-6

EDF-4672

ASSUMING A Cantilevered Support:

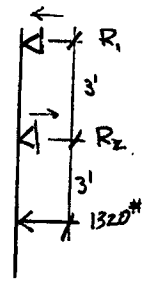

$M_{max} = 1320^{\#}(3) = 3960^{\#}\text{-ft}$

$R_1 = V_1 = \frac{1320\ (3)}{3} = 1320^{\#}$

$R_2 = 2640^{\#}/\text{ft}$

ASSUMING 4' MAX SPACING:

$M_{MAX} = 3960\ \#\text{-ft/ft}(4') = 15.84\ \text{K-ft} = 190.1\ \text{K-in}$

$R_2 = 2640\ (4) = 10.56\ \text{Kips}$ (Comp)

$R_1 = 1320\ (4) = 5.28\ \text{Kips}$ (Tensile)

SUPPORT: For $M_{max} = 190.1$ K-in

$f_b = 30$ Ksi - Gr. 50 steel Try: $\frac{190.1\ \text{K-in}}{30} = S_x\ 6.33$

W 6X20 $T_f = 3/8$ $b_f = 6$ $d = 6''$

$S_x = 13.4\ \text{in}^3$

$f_b = \frac{190.1\ \text{K-in}}{13.4} = 14.18\ \text{Ksi}$ ✓OK

Anchors:

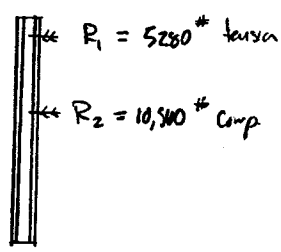

'V TANKS	2/04	P. BRACASSA	A-5

EDF-4672

SHORING PLANKS

633 GRADE BEAM

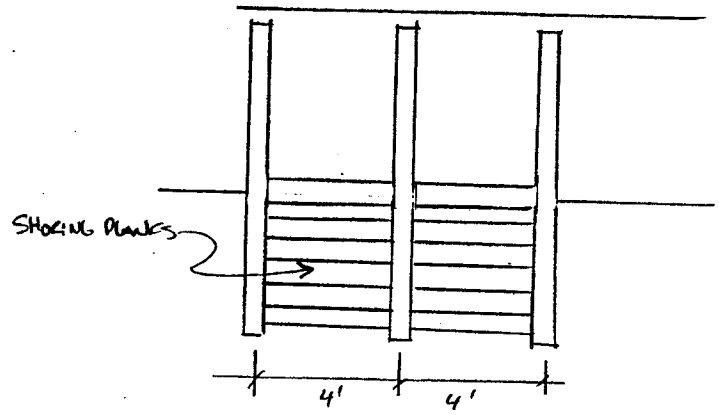

From soil load Diagram.

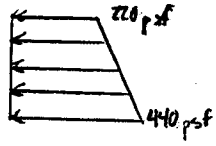

Using Max load of 440 psf
for 12" height $u = 440$ pcf

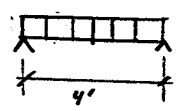

$V_{max} = 440 \frac{(4)}{2}$
$= 880$ #

$M_{max} = 440 \frac{(4)^2}{8} =$
$= 880$ #-ft

Using DF-L(N)

$F_b = 825$ psi
$F_v = 95$ psi

$A_{rea\,req} = \frac{V}{95}(3/2)$

$A = \frac{880(1.5)}{95} = 13.89\ in^2$

$S_{req} = \frac{880(12)}{825} = 12.80\ in^3$

} For 1 ft height

For 3X6 (1) $A = 13.75$ $\times 2 =$ $= 27.5$ ✓ok
ok up to 10' $S_x = 12.604$ $= 25.2$ ✓ok

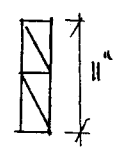

∴ USE 3X6'S

V TANK	2/04	P. BRAGASSA	A-1

EDF-4672

SHORING DESIGN:

Soldier Pile Anchors:

R_1: Tension = 5280#

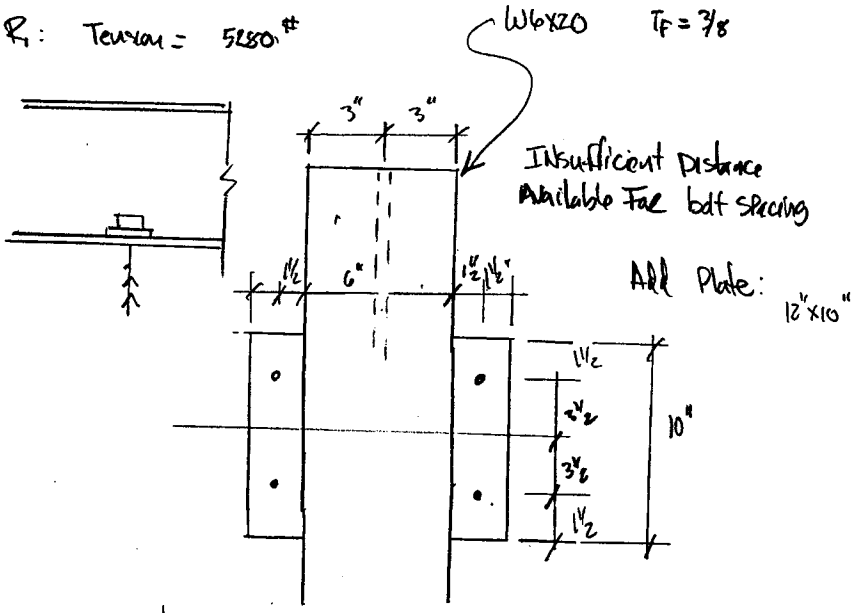

Bolt Spacing

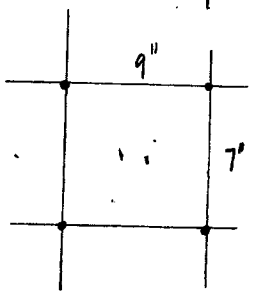

Try ½" ϕ Hilti Kwik Bolt II's

f'c = 3000 psi 3½" embed

Allowable Tension = 2130#

For (4) Bolts: 8520# ✓

See Attached sheet.

Welds:

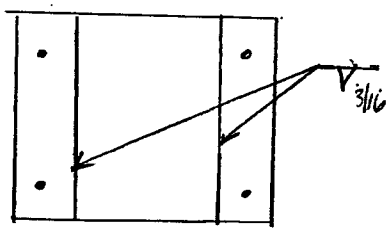

USE ½" A36 plate

$P = .707(2)(.3)\ 3/16$
$= 2.78$ k/ft

Weld the length of plate. on each side for stiffness.

ENGINEERING DESIGN FILE

EDF-4672

Page A-7

V-Tank Shoring 9-Feb
Anchor Bolt Design:

Concrete Strength: 3000 psi

Anchor: Hilti Kwik Bolt II

Design Loads: Actual		
Tension (lbs)	Shear (lbs)	load per bolt
1320	0	

Allowable Loads From Table 1

Tension (lbs)	Shear (lbs)
2130	2450

From Hilti Tables Select the Following:

Bolt Diameter:	1/2"			
Minimum Bolt Embed	(hmin) =	2.25	inch	
Standard Bolt Embed	(hnom) =	3.5	inch	
Minimum Bolt Spacing	(Smin) =	3.5	inch	(based on 1.0 x h_{nom})
Minimum Bolt Spacing for Rated Capacity	(Scr) =	7	inch	(based on 2.0 x h_{nom})
Actual Bolt Spacing	(S) =	7	inch	
Actual Anchor Embed.	(hef) =	3.5	inch	
Min. Edge Distance:	(Cmin)Tension =	3.5	inch	(based on 1.0 x h_{nom})
Min Edge Distance:	(Cmin)Shear =	3.375	inch	(based on 1.5 x h_{min})
Min. Edge Distance for Rated Capacity	(CCR) Tension	5.25	inch	(based on 1.5 x h_{nom})
	(CCR) Shear	6.75	inch	(based on 3.0 x h_{min})
Actual Edge Distance:	C =	5.25	inch	

Nd =	1320 lbs	Actual
Vd=	0 lbs	Actual
Nall =	2130 lbs	Allowable
Vall =	2450 lbs	Allowable

Load Adjustment Factors

Anchor Spacing: for $S_{CR}>S>S_{min}$
Tension/Shear Fa = 1 ($F_a = 0.3 \times (S/h_{nom}) + 0.40$)

Edge Distance: for $C_{CR}>C>C_{min}$
Tension f_{RN} = 1 ($f_{RN} = 0.4 \times (C/h_{nom}) + 0.40$)
Shear f_{RV} = 0.777 ($f_{RV} = 0.333 \times (C/h_{min})$)

Adjusted Allowable Loads:

Tension (Nrec)	2130 lbs	(Nrec = Nallowable x Fa x f_{RN})
Shear (Vrec)	1903.65 lbs	(Vrec = Vallowable x fa xf_{RV})
Combined	0.45046102	(Nd/Nrec)^5/3 + (Vd/Vrec)^5/3 $\leq$ 1.0

A-8
EDF-4672

Hilti Load and Spec Tables Kwik Bolt II Carbon Steel — **Table 1**

Anchor Diameter	Embed Depth	2000 psi		3000 psi		4000 psi		6000 psi	
		Tension	Shear	Tension	Shear	Tension	Shear	Tension	Shear
inch	inch	lbs	lbs	lbs	lbs	lbs	lbs	lbs	lbs
1/4"	1-1/8" *	270	430	330	430	380	430	470	430
	2"	560	530	590	530	630	530	670	530
	3-3/4 *	670	530	670	530	670	530	670	530
3/8"	1-5/8"	530	990	650	1040	750	1100	850	1100
	2-1/2" *	1200	1470	1290	1470	1370	1470	1550	1470
	4-1/4" *	1330	1470	1390	1470	1440	1470	1550	1470
1/2"	2-1/4"	1170	1940	1310	1970	1450	1970	1730	1970
	3-1/2" *	1870	1470	2130	2450	2400	2450	2800	2450
	6" *	2080	1470	2310	2450	2530	2450	2800	2450
5/8"	2-3/4"	1600	1940	1870	3070	2130	3070	2670	3070
	4" **	2400	2450	2850	3840	3290	3840	4190	3840
	7 " **	3200	2450	3470	3840	3730	3840	4190	3840
3/4"	3-1/4"	1970	3070	2320	4140	2670	4140	3200	4140
	4-3/4"**	2930	3840	4130	5120	4800	5120	5870	5120
	8" **	4000	3840	4930	5120	5870	5120	6320	5120
1"	4-1/2"	3330	7070	4050	7600	4670	8140	5070	9200
	6"	4930	9200	6000	9200	7070	9200	8400	9200
	9"	6670	9200	7670	9200	8670	9200	10670	9200

*Values shown are for a shear plane acting through the anchor bolt body. When the shear plane is acting through the anchor bolt threads, reduce the shear values by 20%.

**Values shown are for a shear plane acting through the anchor bolt body. When the shear plane is acting through the bolt thread, reduce the shear value by 12%.

Influence Factors: — **Table 2**

Anchor	Size	1/4"	3/8"	1/2"	5/8"	3/4"	1"
Minimum Embed	**(hmin)**	**1-1/8"**	**1-5/8"**	**2-1/4"**	**2-3/4"**	**3-1/4"**	**4-1/2"**
Anchor	Size	1/4"	3/8"	1/2"	5/8"	3/4"	1"
Standard Embed	**(hnom)**	**2**	**2-1/2"**	**3-1/2"**	**4"**	**4-3/4"**	**6"**

V TANKS	2/04	P. BRAGASSA	A-9

EDF-4672

SHORING DESIGN:

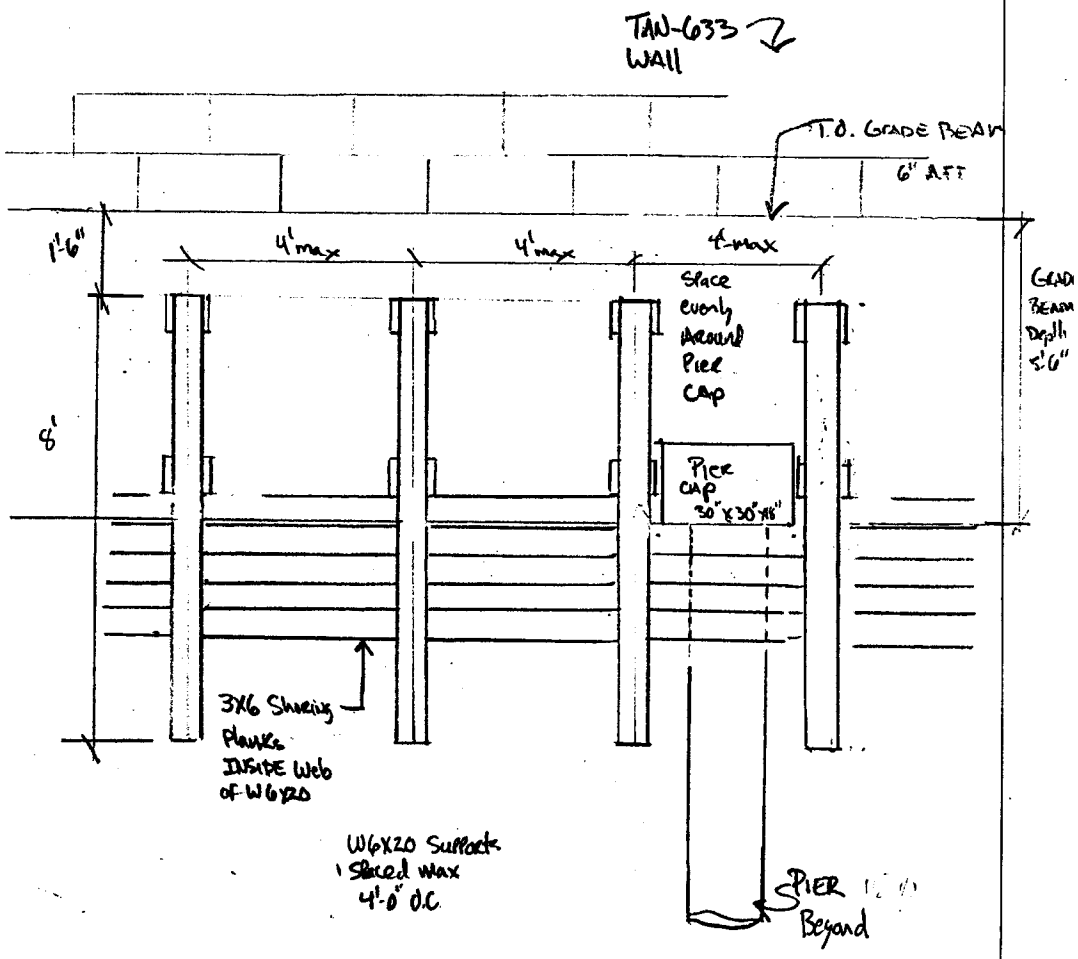

SHORING ELEVATION (TYP)

V TANKS	2/04	P. BRAGASSA	A-11

EDF-4672

TAN 633

SHORING DESIGN
(Not included in drawing Package)
(use only if excavation exceeds assumed limits)

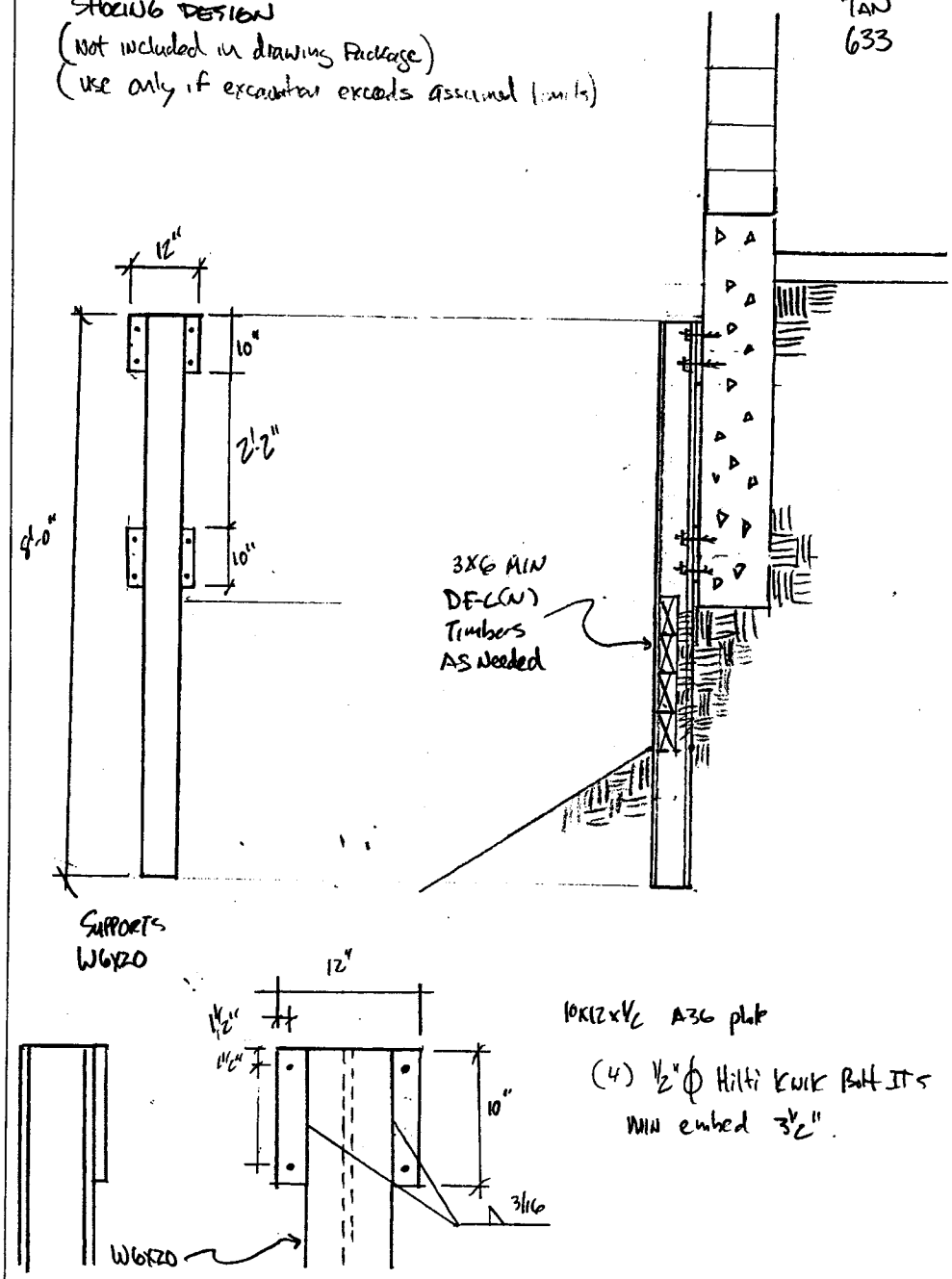

V-TANK 2/04 P. BRYCASSA

633 EXTERIOR CRANE: EDF-4672

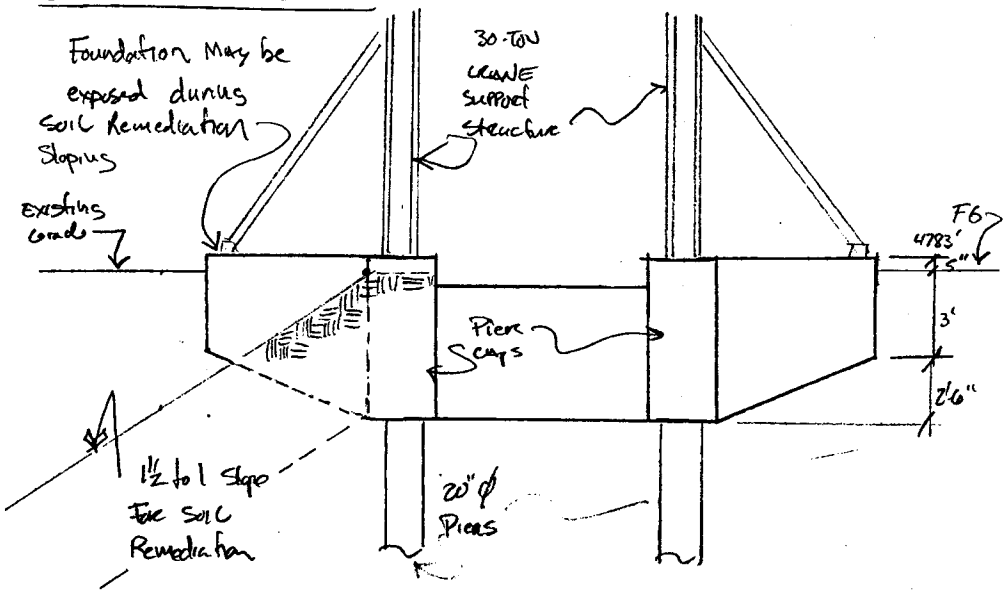

Soil MAY be Sloped to Bottom of Pier Cap BEFORE Shoring is Required
As long As Pier Are not exposed no undermining will occur.

633 EXTERIOR CRANE
Foundation DETAIL REF. #107337

VERIFY EXCAVATION will not undermine Foundation.

Distance From V-1 to Foundation = Approx 32' (autocad model)

∴ Δ elevation 21' to bottom of tank

At 1½ to 1 Slope and 21 cut Horizontal distance
= 21 (1.5) = 31.5' ∴ Pier will not be exposed ✓ok

∴ CRANE Structure will not be undermined by excavation.

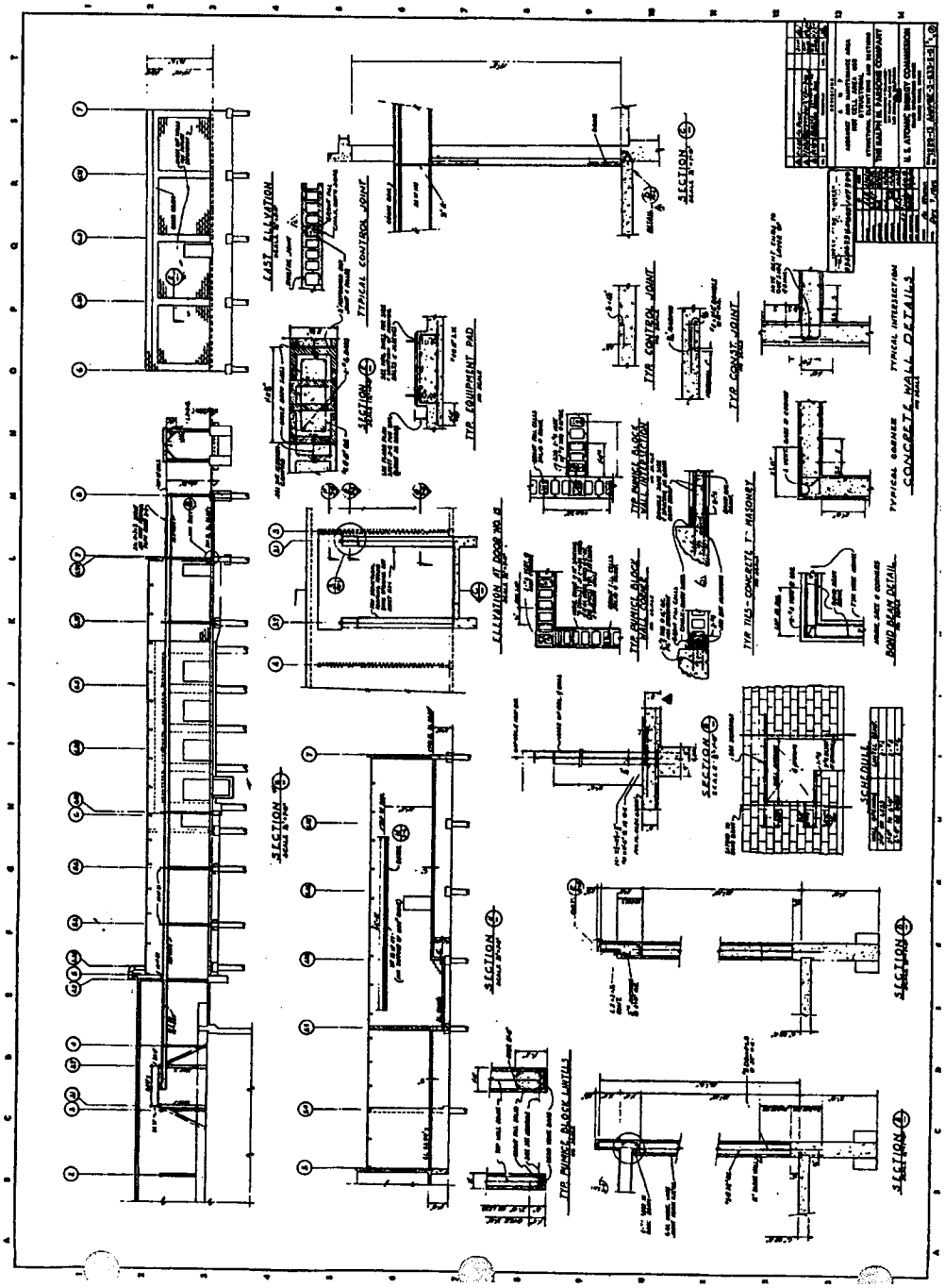
EAST ELEVATION
TYPICAL CONTROL JOINT
SECTION
TYP. EQUIPMENT PAD
TYP. CONTROL JOINT
TYP. CONST. JOINT
TYPICAL INTERSECTION
TYPICAL CORNER
CONCRETE WALL DETAILS
ELEVATION AT DOOR NO. 15
TYP. PUMICE BLOCK WALL INTERSECTION
TYP. PUMICE BLOCK WALL COURSE
TYP. TIES - CONCRETE T' MASONRY
BOND BEAM DETAIL
SCHEDULE
TYP. PUMICE BLOCK LINTELS

V-TANKS 3/04 P. [illegible]

EDF-4672

EXCAVATION DESIGN SUMMARY:

BASED ON THE EXCAVATION DEPTHS PROPOSED, THE ADJACENT STRUCTURES (TAN-633, TAN-607) WILL NOT BE IMPACTED.
A SHORING DESIGN IS INCLUDED IN THIS EDF IN THE UNLIKELY EVENT THAT DEEPER EXCAVATIONS ARE REQUIRED.

ESTIMATED EXCAVATION QUANTITIES:

PHASE I 701 CY

PHASE II 1312 CY

PHASE III 1526 CY

Staging Pile Design:

A staging area is required to temporarily store the soils removed during the Phase I and II excavations. This soil will be packaged and disposed of at ICDF during the Phase III portion of the project. Phase II soil will not be staged, but will be loaded directly into containers for disposal.

Soil storage Volume Required:

Phase I: 701 Cubic yards (excavation to the top of V-tanks)

Phase II: 1312 Cubic Yards (excavation to remove tanks)

Total: 2013 cy

Tank Volumes: (10' diameter tank x 20' length)

$V = \pi R^2 = \pi(5\text{-ft})^2 \times 20\text{-ft} = 1571$ cf

For three tanks: 1571 x 3 = 4713 cf (neglect V-9)

Net volume: 2013 cy – 4713 cf/27 = 1838 cy

Assuming 25% swell the total required volume: 1838 cy x 1.25 = 2297 cy minimum.

Location:

The area north of the V-tanks site is bounded by a road on the extreme north and west and a ridge to the east. The area directly adjacent to the tanks would be the most convenient since the travel distance is short and will be remediated during the Phase III work, however, this would congest the work site and is limited in size. The area just north of th power lines was judged to be a more suitable location. This will allow staging the soil in an isolated location that would not interfere with the on-going work at the V-tank site. This location would allow ICDF personnel transporting the soil for disposal easy access from the adjacent road without interfering with clean-up operations at the work site.

The staging pile design shall be in compliance with *40 CFR 264.554, Staging Piles*. This regulation requires the design to prevent or minimize the release of hazardous wastes and constituents into the environment and to minimize or adequately control cross media transfer through the use of liners, covers, run-off/run-on controls as appropriate. The staging pile will have a relatively short time use (approximately 6 months), therefore the program decided to meet these requirements by preparing a gravel surface on the existing staging site to define the existing grade and construct the staging pile directly

upon this surface. The soil pile will be covered with a 30 mil high density polyethylene to minimize the release of windblown contamination. The cover will be secured by sandbagging along the base and crown and as needed throughout. The pile design allowed for side slopes of 2.5 to 1 to allow easier depositing and contouring of the soil. This also provides a flatter surface for securing the sandbags and makes covering the soil easier.

A soil berm will be constructed around the elevated portion of the area to prevent surface run-on. A silt fence will be constructed along the lower end of the area to prevent erosion. The entire area will be remediated by excavating a minimum of 6-inches below the existing grade. Sampling will determine the final amount of excavation required for site clean-up.

Calendar
Contractor Project

Gary E Mc Dannel
04/10/2004 05:52 AM

To: Norman K Rogers/ROGENK/NON/INEEL/US@INEL
cc: David L Eaton/DLE/CC01/INEEL/US@INEL, Blake T Burt/BLAKB/NON/INEEL/US@INEL, James J Jessmore/JJ3/CC01/INEEL/US@INEL, Patrick W Bugassa/PWB/CC01/INEEL/US@INEL
Fax to:
Subject: liner

Kim, I think Dave's suggestion in the 2nd paragraph below is on the mark. Please modify your staging pile drawings by including this gravel layer. Thanks.

Gary McDannel
TCP/WAG-1 PE
(208) 526-5076/pager 7391
--- Forwarded by Gary E Mc Dannel/GEM2/CC01/INEEL/US on 04/10/2004 05:49 AM ---

David L Eaton
04/09/2004 05:23 PM

To: Norman K Rogers/ROGENK/NON/INEEL/US@INEL
cc: gem2@inel.gov, jj3@inel.gov, Blake T Burt/BLAKB/NON/INEEL/US@INEL, ajz
Fax to:
Subject: liner

Per our discussions with agencies, no liner will be required beneath staging piles of dirt excavated from around the V-tanks. The project will be expected to remove sufficient soil after the staging pile has been removed to ensure that contaminated soils are sufficiently collected and properly sent to ICDF for disposal. Covers to prevent windblown contamination and measures to prevent run-on run-off will also be required.

Gary, Jim, and Blake
In order to ensure that sufficient soils will be removed, the project might want to consider some form of marker or barrier for the soils to be stockpiled upon to provide a definitive level whereby excavation can stop 6 inches beyond. An example might be to put down a thin gravel layer, knowing that once that layer was removed, you were ready to perform confirmation sampling to confirm cleanup of the soils.

Dave

David L Eaton
WAG 1/Mixed Waste Technologies
Phone 208-526-7002
Cell 208-520-3714
Fax 208-526-1061
Email dle@inel.gov

Soil Staging Area Reference Memo

Tank Staging Area:

The contents in the four tanks, V-1, V-2, V-3, and V-9 will be removed and the tanks cleaned to meet the waste acceptance criteria of the ICDF. Once free of liquids, the opening in the tanks will be sealed off using blank flanges (or plugs). Each tank will be lifted from the excavation empty and placed in a staging area to await final disposal at ICDF.

Since the tanks are empty and sealed, containment of the staging area is not required per 40 CFR 264.175, *Standards for Standards for Owners and Operators of Hazardous Waste Treatment Storage, and Disposal facilities, Containment.*

A berm was provided around the tank storage site only to designate the limits of the staging area for clean-up activities. The site chosen for the tank staging is located over the area where Valve Box #2 was removed and this soil in this area is already planned to be removed and disposed of.

Mail

Idaho Completion Project

Gary E Mc Dannel
04/13/2004 10:45 AM

To: Patrick W Bragassa/PWB/CC01/INEEL/US@INEL
cc: David L Eaton/DLE/CC01/INEEL/US@INEL, John D Harris/JHARRIS/CC01/INEEL/US@INEL, John R Horton/HORTJR/NON/INEEL/US@INEL
Fax to:
Subject: Re: liner

I believe you are referring to the empty tanks placed in interim storage awaiting transport to ICDF. These tanks will be empty and the waste solidified (e.g. absorbent added prior to removal from the excavation). Therefore, I do not believe they need secondary containment. I think we could place the cribbing on a clean bed of gravel that we'll remove when we remove the tanks and soils down to ICDF. The tanks may have a small amount of external contamination comparable to the surrounding soil, but most of this should be removed prior to removal from the excavation. Therefore, I don't believe we would need to place a cover over the tanks, but this is primarily a radcon issue. (John Horton, weigh in on this.) Prior to transport down to ICDF, there are external contamination limits which may force us to wrap the tank then.

For the pans under the pumps and valves, I believe a cover over these would be best to preclude rain water from entering the pans. It's always a pain to have to deal with water in the pans because we basically have to assume it's from a process leak until we can prove otherwise.

Hopes this helps. Give me a call if not.

Gary McDannel
TCP/WAG-1 PE
(208) 526-5076/pager 7391
--- Forwarded by Gary E Mc Dannel/GEM2/CC01/INEEL/US on 04/13/2004 09:26 AM ---

David L Eaton
04/13/2004 08:52 AM

To: Patrick W Bragassa/PWB/CC01/INEEL/US@INEL
cc: Gary E Mc Dannel/GEM2/CC01/INEEL/US@INEL
Fax to:
Subject: Re: liner

Pat,
Specifically which tanks are we talking about. Any tanks with liquid in them requires secondary containment. Assuming the tanks are covered all of the time, there is no reason to cover them specifically. However, if they are outside and you want to prevent precipitation into the secondary containment, then you might want to cover them. However, I am unaware of any tanks that will be outside. Are you talking about providing cover for the secondary containment and cover around the pumps and valves outside?
Dave

David L. Eaton
WAG 1/Mixed Waste Technologies
Phone 208-526-7002
Cell 208-520-3714
Fax 208-526-1061
Email dle@inel.gov
Patrick W Bragassa

Tank Staging Area Reference Memo

Appendix B

Tank Lifting Analysis

This page intentionally left blank.

EDF-4672 RFLuppert B2/K6

LIFTING OF V-TANKS

There are 3 V-tanks: V-1, V-2 & V-2
& they identical in size & mat'l, see dwg 106894

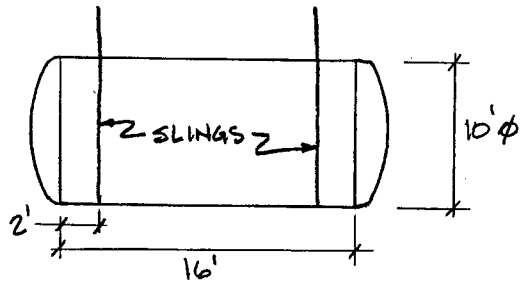

tank mat'l is stainless steel

A structural analysis is performed for lifting the tanks to assess tank integrity

Analysis Assumptions:

1. stainless steel is 304
2. project has assumed tank wall thickness of 1/4", for this analysis a wall thickness of 1/8" is used
3. tanks will be lifted empty, per TFR-278
4. each tank to be lifted with 2 slings, each located 2' in from cylindrical ends, see dwg C-12 of App. B

Tank analysis is performed using COSMOS/M; tank & slings are included in model, & tank stresses resulting from selfwt are determined. See following pages for sketches of model & stress results.

EDF-4672 RFLuppert B3/16

Greatest stresses in tank wall occur along line of sling. Max. stress is approx. 5500 psi (von Mises) which is well below the yield stress of 35000 psi for 304 SS.

It was conservatively assumed that the tank wall thickness is only 1/8" thick & the analysis indicates that the tank is capable of being lifted without adverse effects.

GeoStar 2.85 (64K Version): tankH EDF-4672 App. B

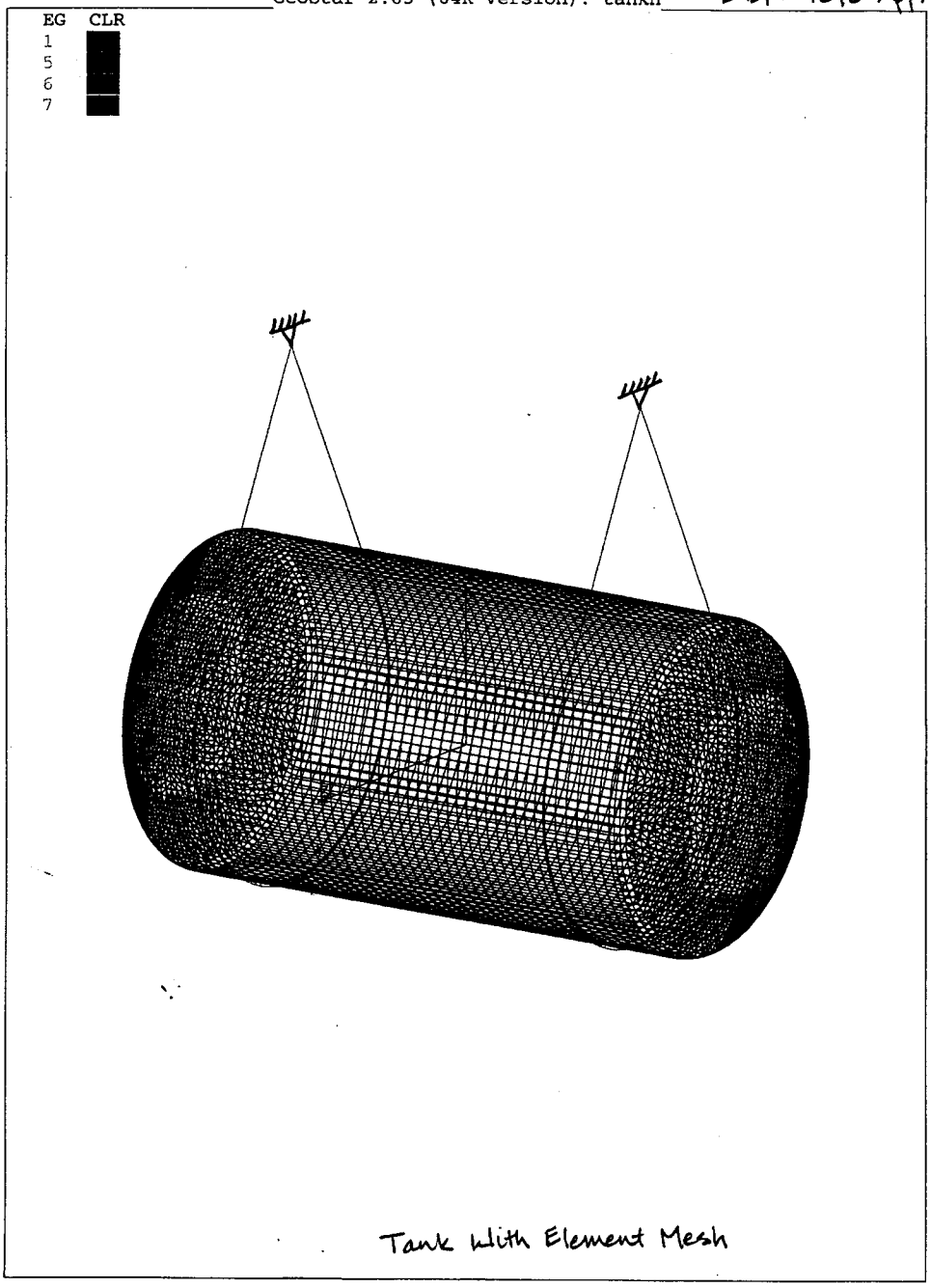

Tank With Element Mesh

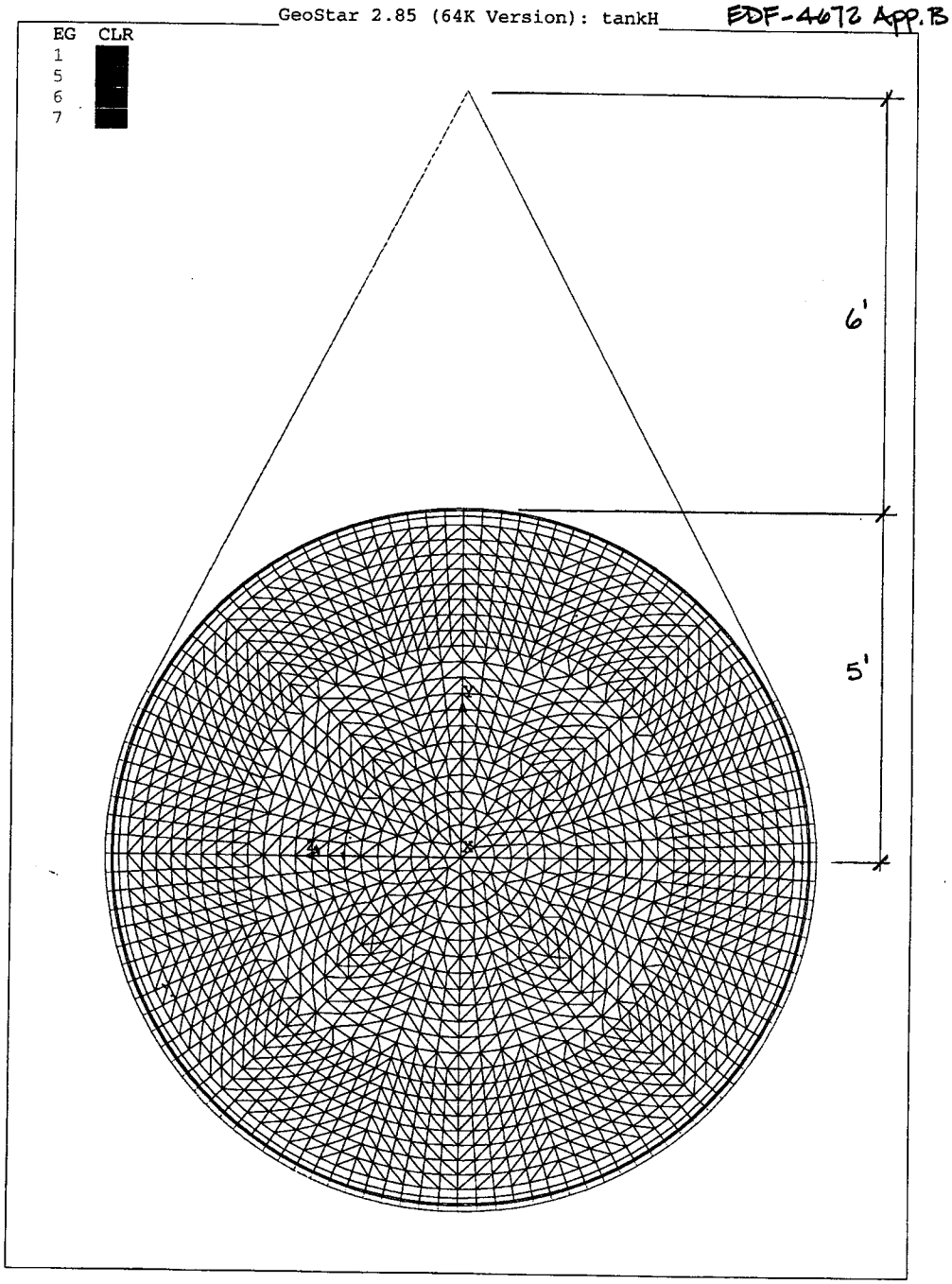
GeoStar 2.85 (64K Version): tankH
EDF-4672 App.B
EG CLR
1
5
6
7
6'
5'

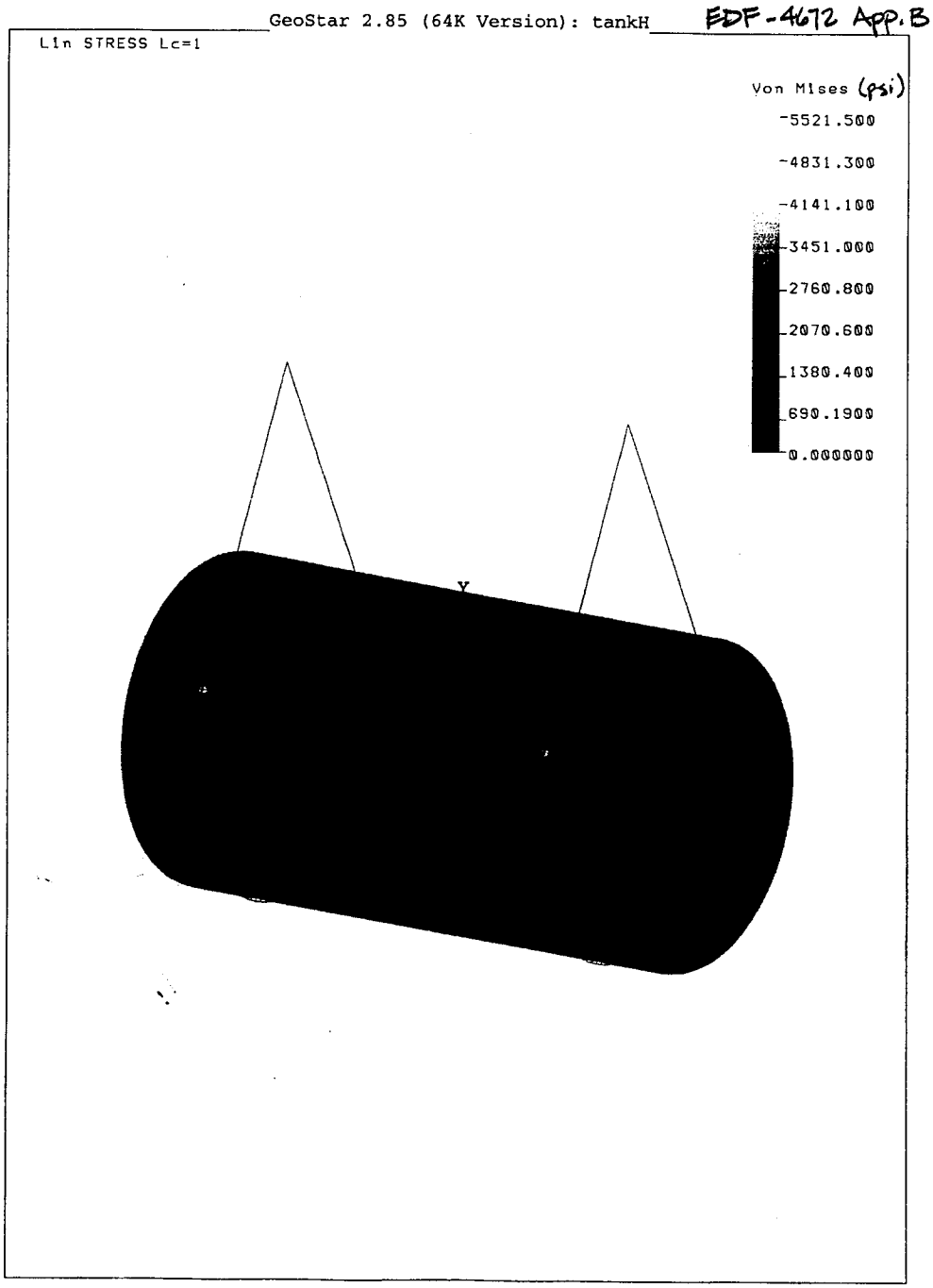
GeoStar 2.85 (64K Version): tankH
EDF-4672 App. B
Lin STRESS Lc=1
Von Mises (psi)
-5521.500
-4831.300
-4141.100
-3451.000
-2760.800
-2070.600
-1380.400
-690.1900
0.000000
Y

```
C* File tank.ses
C* COSMOSM GeoStar 2.85 (64K Version)
C* Problem : tankH                    Date : 04-09-2004  Time : 07:32:07
C*
PLANE,X,0,1
PT,1,0,60,0
PT,2,72,60,0
PT,3,102,60,0
PT,4,120,0,0
PT,5,12,0,0
CRLIN,1,1,2
CRLIN,2,2,3
CRARC,3,3,4,5,108
CRFILLET,4,2,3,6,1,0,1E-006
PT,9,-72,60,0
PT,10,-102,60,0
PT,11,-120,0,0
PT,12,-12,0,0
CRLIN,5,1,9
CRLIN,6,9,10
CRARC,7,10,11,12,108
CRFILLET,8,6,7,6,1,0,1E-006
SFSWEE[,1,8,1,X,360,4
CRCIRCLE,63,17,4,19,61,360,4
CRCIRCLE,67,32,12,33,61,360,4
CRBRK,65,66,1,10,0
CRBRK,69,70,1,10,0
CRBRK,65,65,1,3,0
CRBRK,71,72,1,3,0
CRBRK,86,88,1,3,0
CRBRK,69,69,1,3,0
CRBRK,89,90,1,3,0
CRBRK,104,106,1,3,0
CRDEL,73,85,1
CRDEL,66,66,1
CRDEL,91,103,1
CRDEL,70,70,1
PT,112,72,132,0
PT,113,-72,132,0
CRCOMPR,1,130
CRLIN,103,67,112
CRLIN,104,54,112
CRLIN,105,85,113
CRLIN,106,72,113
EGROUP,1,SHELL4,2,0,2,0,0,0,0,0
PICK_MAT,1,ST_304,FPS
C* MATL:ST_304        : STEEL,AISI 304(SHEET)

C* EX         0.28E+08   psi
C* NUXY       0.29
C* GXY        0.11E+08   psi
C* ALPX       0.99E-05   /Fahrenheit
C* DENS       0.75E-03   lbf*s*s/in**4
C* KX         0.22E-03   BTU/in/s/F
C* C (Cp)      46.       BTU*in/lbf/s/s/F
RCONST,1,1,1,1,0.188
PRINT_OPS,1,0,0,0,0,1,0,0,1,0
```

```
A_STATIC,G,0,0,1E-006,1E+010,0,0,0,0,0,0,0,0,0,0,0
ACEL,0,-386.4,0
SFREORNT,9,12,1
SFREORNT,25,28,1
M_SF,1,8,1,4,15,30,1,1
MSFDEL,1,8,1
M_SF,1,4,1,4,16,30,1,1
M_SF,17,20,1,4,16,30,1,1
M_SF,5,8,1,4,6,30,1,1
M_SF,21,24,1,4,6,30,1,1
M_SF,13,13,1,4,3,30,1,1
M_SF,14,16,1,4,3,30,1,1
M_SF,29,32,1,4,3,30,1,1
EGROUP,2,SHELL3,0,0,2,0,0,0,0,0
SFREORNT,17,32,1
MSFDEL,1,32,1
ACTSET,EG,1
M_SF,1,4,1,4,18,30,1,1
M_SF,17,20,1,4,18,30,1,1
M_SF,5,8,1,4,6,30,1,1
M_SF,21,24,1,4,6,30,1,1
M_SF,13,16,1,4,3,30,1,1
M_SF,29,32,1,4,3,30,1,1
ACTSET,EG,2
MA_SF,9,12,1,0,3,0
MA_SF,25,28,1,0,3,0
NMERGE,1,10752,1,.01,0,0,0
NCOMPR,1,10752
INITSEL,CR,1,1
   SELINP,  CR, 13, 19, 2, 1
   SELINP,  CR, 63, 65, 1, 1
   SELINP,  CR, 69, 73, 1, 1
   SELINP,  CR, 79, 90, 1, 1
   SELINP,  CR, 103, 104, 1, 1
   SELINP,  PT, 2, 17, 15, 1
   SELINP,  PT, 19, 23, 2, 1
   SELINP,  PT, 44, 46, 1, 1
   SELINP,  PT, 52, 54, 1, 1
   SELINP,  PT, 67, 69, 1, 1
   SELINP,  PT, 88, 99, 1, 1
   SELINP,  PT, 112, 112, 1, 1
EGROUP,3,BEAM3D,0,0,0,0,0,0,0,0
PICK_MAT,2,NYLON,FPS
C* MATL:NYLON          : NYLON 6/10

C* EX          0.12E+07   psi
C* NUXY        0.28
C* GXY         0.47E+06   psi
C* ALPX        0.16E-04   /Fahrenheit
C* DENS        0.13E-03   lbf*s*s/in**4
C* KX          0.70E-05   BTU/in/s/F
C* C (Cp)      0.14E+03   BTU*in/lbf/s/s/F
BMSECDEF,3,2,1,1,10,1,5,0,0,0,0,0,0,0,1
M_CR,63,64,1,3,30,1,17
M_CR,65,90,1,3,1,1,17
M_CR,103,104,1,3,1,1,17
   SELINP,  ND, 19, 2280, 19, 1
```

```
   SELINP,  ND, 9499, 9622, 1, 1
NMERG,1,9622,1,0.0001,0,0,0
NCOMPR,1,9618
C*    Number (0) should be between 1 and 10
C*    Number (0) should be between 1 and 10
INITSEL,ALL,1,0
INITSEL,CR,1,2
   SELINP,  CR, 41, 44, 1, 2
   SELINP,  CR, 66, 68, 1, 2
   SELINP,  CR, 74, 78, 1, 2
   SELINP,  CR, 91, 102, 1, 2
   SELINP,  CR, 105, 106, 1, 2
   SELINP,  PT, 9, 32, 23, 2
   SELINP,  PT, 33, 35, 1, 2
   SELINP,  PT, 48, 50, 1, 2
   SELINP,  PT, 70, 72, 1, 2
   SELINP,  PT, 85, 87, 1, 2
   SELINP,  PT, 100, 111, 1, 2
   SELINP,  PT, 113, 113, 1, 2
M_CR,66,67,1,3,30,1,32
M_CR,68,102,1,3,1,1,32
M_CR,105,106,1,3,1,1,32
NMERG,1,9703,1,0.0001,0,0,0
NCOMPR,1,9699
   SELINP,  ND, 9580, 9660, 1, 2
NMERG,1,9660,1,0.0001,0,0,0
ACTSET,SEL,1
   SELINP,  ND, 2281, 4423, 18, 2
   SELINP,  ND, 9580, 9660, 1, 2
ACTSET,SEL,1
INITSEL,ND,1,1
   SELINP,  ND, 19, 2280, 19, 1
   SELINP,  ND, 9499, 9579, 1, 1
EGROUP,4,TRUSS3D,0,0,0,0,0,0,0,0
MPROP,2,EX,1E6
RCONST,4,3,1,1,100
PICK_MAT,2,NYLON,FPS
C* MATL:NYLON          : NYLON 6/10

C* EX         0.12E+07   psi
C* NUXY       0.28
C* GXY        0.47E+06   psi
C* ALPX       0.16E-04   /Fahrenheit
C* DENS       0.13E-03   lbf*s*s/in**4
C* KX         0.70E-05   BTU/in/s/F
C* C (Cp)     0.14E+03   BTU*in/lbf/s/s/F
MPROP,3,EX,1E6
MPROP,3,EX,1E10
C* FILE,"C:\Current Projects\V-Tank Analysis\V3_Tank Analysis\tHelem72&
C* .ses",1,1,1,1
EL,12673,CR,0,2,418,9566,0,0,0,0,0,0
EL,12674,CR,0,2,437,9567,0,0,0,0,0,0
EL,12675,CR,0,2,456,9576,0,0,0,0,0,0
EL,12676,CR,0,2,475,9568,0,0,0,0,0,0
EL,12677,CR,0,2,494,9569,0,0,0,0,0,0
EL,12678,CR,0,2,513,9577,0,0,0,0,0,0
EL,12679,CR,0,2,532,9570,0,0,0,0,0,0
```

```
EL,12680,CR,0,2,551,9571,0,0,0,0,0,0
EL,12681,CR,0,2,570,9578,0,0,0,0,0,0
EL,12682,CR,0,2,589,9499,0,0,0,0,0,0
EL,12683,CR,0,2,608,9500,0,0,0,0,0,0
EL,12684,CR,0,2,627,9501,0,0,0,0,0,0
EL,12685,CR,0,2,646,9502,0,0,0,0,0,0
EL,12686,CR,0,2,665,9503,0,0,0,0,0,0
EL,12687,CR,0,2,684,9504,0,0,0,0,0,0
EL,12688,CR,0,2,703,9505,0,0,0,0,0,0
EL,12689,CR,0,2,722,9506,0,0,0,0,0,0
EL,12690,CR,0,2,741,9507,0,0,0,0,0,0
EL,12691,CR,0,2,760,9508,0,0,0,0,0,0
EL,12692,CR,0,2,779,9509,0,0,0,0,0,0
EL,12693,CR,0,2,798,9510,0,0,0,0,0,0
EL,12694,CR,0,2,817,9511,0,0,0,0,0,0
EL,12695,CR,0,2,836,9512,0,0,0,0,0,0
EL,12696,CR,0,2,855,9513,0,0,0,0,0,0
EL,12697,CR,0,2,874,9514,0,0,0,0,0,0
EL,12698,CR,0,2,893,9515,0,0,0,0,0,0
EL,12699,CR,0,2,912,9516,0,0,0,0,0,0
EL,12700,CR,0,2,931,9517,0,0,0,0,0,0
EL,12701,CR,0,2,950,9518,0,0,0,0,0,0
EL,12702,CR,0,2,969,9519,0,0,0,0,0,0
EL,12703,CR,0,2,988,9520,0,0,0,0,0,0
EL,12704,CR,0,2,1007,9521,0,0,0,0,0,0
EL,12705,CR,0,2,1026,9522,0,0,0,0,0,0
EL,12706,CR,0,2,1045,9523,0,0,0,0,0,0
EL,12707,CR,0,2,1064,9524,0,0,0,0,0,0
EL,12708,CR,0,2,1083,9525,0,0,0,0,0,0
EL,12709,CR,0,2,1102,9526,0,0,0,0,0,0
EL,12710,CR,0,2,1121,9527,0,0,0,0,0,0
EL,12711,CR,0,2,1140,9528,0,0,0,0,0,0
EL,12712,CR,0,2,1159,9529,0,0,0,0,0,0
EL,12713,CR,0,2,1178,9531,0,0,0,0,0,0
EL,12714,CR,0,2,1197,9532,0,0,0,0,0,0
EL,12715,CR,0,2,1216,9533,0,0,0,0,0,0
EL,12716,CR,0,2,1235,9534,0,0,0,0,0,0
EL,12717,CR,0,2,1254,9535,0,0,0,0,0,0
EL,12718,CR,0,2,1273,9536,0,0,0,0,0,0
EL,12719,CR,0,2,1292,9537,0,0,0,0,0,0
EL,12720,CR,0,2,1311,9538,0,0,0,0,0,0
EL,12721,CR,0,2,1330,9539,0,0,0,0,0,0
EL,12722,CR,0,2,1349,9540,0,0,0,0,0,0
EL,12723,CR,0,2,1368,9541,0,0,0,0,0,0
EL,12724,CR,0,2,1387,9542,0,0,0,0,0,0
EL,12725,CR,0,2,1406,9543,0,0,0,0,0,0
EL,12726,CR,0,2,1425,9544,0,0,0,0,0,0
EL,12727,CR,0,2,1444,9545,0,0,0,0,0,0
EL,12728,CR,0,2,1463,9546,0,0,0,0,0,0
EL,12729,CR,0,2,1482,9547,0,0,0,0,0,0
EL,12730,CR,0,2,1501,9548,0,0,0,0,0,0
EL,12731,CR,0,2,1520,9549,0,0,0,0,0,0
EL,12732,CR,0,2,1539,9550,0,0,0,0,0,0
EL,12733,CR,0,2,1558,9551,0,0,0,0,0,0
EL,12734,CR,0,2,1577,9552,0,0,0,0,0,0
EL,12735,CR,0,2,1596,9553,0,0,0,0,0,0
EL,12736,CR,0,2,1615,9554,0,0,0,0,0,0
```

```
EL,12737,CR,0,2,1634,9555,0,0,0,0,0,0
EL,12738,CR,0,2,1653,9556,0,0,0,0,0,0
EL,12739,CR,0,2,1672,9557,0,0,0,0,0,0
EL,12740,CR,0,2,1691,9558,0,0,0,0,0,0
EL,12741,CR,0,2,1710,9559,0,0,0,0,0,0
EL,12742,CR,0,2,1729,9560,0,0,0,0,0,0
EL,12743,CR,0,2,1748,9561,0,0,0,0,0,0
EL,12744,CR,0,2,1767,9572,0,0,0,0,0,0
EL,12745,CR,0,2,1786,9562,0,0,0,0,0,0
EL,12746,CR,0,2,1805,9563,0,0,0,0,0,0
EL,12747,CR,0,2,1824,9573,0,0,0,0,0,0
EL,12748,CR,0,2,1843,9564,0,0,0,0,0,0
EL,12749,CR,0,2,1862,9565,0,0,0,0,0,0
EL,12750,CR,0,2,1881,9574,0,0,0,0,0,0
EL,12751,CR,0,2,1900,9575,0,0,0,0,0,0
EL,12752,CR,0,2,2659,9647,0,0,0,0,0,0
EL,12753,CR,0,2,2677,9648,0,0,0,0,0,0
EL,12754,CR,0,2,2695,9657,0,0,0,0,0,0
EL,12755,CR,0,2,2713,9649,0,0,0,0,0,0
EL,12756,CR,0,2,2731,9650,0,0,0,0,0,0
EL,12757,CR,0,2,2749,9658,0,0,0,0,0,0
EL,12758,CR,0,2,2767,9651,0,0,0,0,0,0
EL,12759,CR,0,2,2785,9652,0,0,0,0,0,0
EL,12760,CR,0,2,2803,9659,0,0,0,0,0,0
EL,12761,CR,0,2,2821,9580,0,0,0,0,0,0
EL,12762,CR,0,2,2839,9581,0,0,0,0,0,0
EL,12763,CR,0,2,2857,9582,0,0,0,0,0,0
EL,12764,CR,0,2,2875,9583,0,0,0,0,0,0
EL,12765,CR,0,2,2893,9584,0,0,0,0,0,0
EL,12766,CR,0,2,2911,9585,0,0,0,0,0,0
EL,12767,CR,0,2,2929,9586,0,0,0,0,0,0
EL,12768,CR,0,2,2947,9587,0,0,0,0,0,0
EL,12769,CR,0,2,2965,9588,0,0,0,0,0,0
EL,12770,CR,0,2,2983,9589,0,0,0,0,0,0
EL,12771,CR,0,2,3001,9590,0,0,0,0,0,0
EL,12772,CR,0,2,3019,9591,0,0,0,0,0,0
EL,12773,CR,0,2,3037,9592,0,0,0,0,0,0
EL,12774,CR,0,2,3055,9593,0,0,0,0,0,0
EL,12775,CR,0,2,3073,9594,0,0,0,0,0,0
EL,12776,CR,0,2,3091,9595,0,0,0,0,0,0
EL,12777,CR,0,2,3109,9596,0,0,0,0,0,0
EL,12778,CR,0,2,3127,9597,0,0,0,0,0,0
EL,12779,CR,0,2,3145,9598,0,0,0,0,0,0
EL,12780,CR,0,2,3163,9599,0,0,0,0,0,0
EL,12781,CR,0,2,3181,9600,0,0,0,0,0,0
EL,12782,CR,0,2,3199,9601,0,0,0,0,0,0
EL,12783,CR,0,2,3217,9602,0,0,0,0,0,0
EL,12784,CR,0,2,3235,9603,0,0,0,0,0,0
EL,12785,CR,0,2,3253,9604,0,0,0,0,0,0
EL,12786,CR,0,2,3271,9605,0,0,0,0,0,0
EL,12787,CR,0,2,3289,9606,0,0,0,0,0,0
EL,12788,CR,0,2,3307,9607,0,0,0,0,0,0
EL,12789,CR,0,2,3325,9608,0,0,0,0,0,0
EL,12790,CR,0,2,3343,9609,0,0,0,0,0,0
EL,12791,CR,0,2,3361,9610,0,0,0,0,0,0
EL,12792,CR,0,2,3379,9612,0,0,0,0,0,0
EL,12793,CR,0,2,3397,9613,0,0,0,0,0,0
```

```
EL,12794,CR,0,2,3415,9614,0,0,0,0,0,0
EL,12795,CR,0,2,3433,9615,0,0,0,0,0,0
EL,12796,CR,0,2,3451,9616,0,0,0,0,0,0
EL,12797,CR,0,2,3469,9617,0,0,0,0,0,0
EL,12798,CR,0,2,3487,9618,0,0,0,0,0,0
EL,12799,CR,0,2,3505,9619,0,0,0,0,0,0
EL,12800,CR,0,2,3523,9620,0,0,0,0,0,0
EL,12801,CR,0,2,3541,9621,0,0,0,0,0,0
EL,12802,CR,0,2,3559,9622,0,0,0,0,0,0
EL,12803,CR,0,2,3577,9623,0,0,0,0,0,0
EL,12804,CR,0,2,3595,9624,0,0,0,0,0,0
EL,12805,CR,0,2,3613,9625,0,0,0,0,0,0
EL,12806,CR,0,2,3631,9626,0,0,0,0,0,0
EL,12807,CR,0,2,3649,9627,0,0,0,0,0,0
EL,12808,CR,0,2,3667,9628,0,0,0,0,0,0
EL,12809,CR,0,2,3685,9629,0,0,0,0,0,0
EL,12810,CR,0,2,3703,9630,0,0,0,0,0,0
EL,12811,CR,0,2,3721,9631,0,0,0,0,0,0
EL,12812,CR,0,2,3739,9632,0,0,0,0,0,0
EL,12813,CR,0,2,3757,9633,0,0,0,0,0,0
EL,12814,CR,0,2,3775,9634,0,0,0,0,0,0
EL,12815,CR,0,2,3793,9635,0,0,0,0,0,0
EL,12816,CR,0,2,3811,9636,0,0,0,0,0,0
EL,12817,CR,0,2,3829,9637,0,0,0,0,0,0
EL,12818,CR,0,2,3847,9638,0,0,0,0,0,0
EL,12819,CR,0,2,3865,9639,0,0,0,0,0,0
EL,12820,CR,0,2,3883,9640,0,0,0,0,0,0
EL,12821,CR,0,2,3901,9641,0,0,0,0,0,0
EL,12822,CR,0,2,3919,9642,0,0,0,0,0,0
EL,12823,CR,0,2,3937,9653,0,0,0,0,0,0
EL,12824,CR,0,2,3955,9643,0,0,0,0,0,0
EL,12825,CR,0,2,3973,9644,0,0,0,0,0,0
EL,12826,CR,0,2,3991,9654,0,0,0,0,0,0
EL,12827,CR,0,2,4009,9645,0,0,0,0,0,0
EL,12828,CR,0,2,4027,9646,0,0,0,0,0,0
EL,12829,CR,0,2,4045,9655,0,0,0,0,0,0
EL,12830,CR,0,2,4063,9656,0,0,0,0,0,0
INITSEL,ALL,1,0
ACTSET,SEL,2
ACTSET,SEL,1
   SELINP,  EL, 18, 2160, 18, 1
   SELINP,  EL, 12513, 12592, 1, 1
   SELINP,  EL, 12513, 12592, 1, 1
INITSEL,ALL,1,0
INITSEL,EL,1,2
   SELINP,  EL, 12593, 12671, 1, 2
   SELINP,  ND, 2281, 4423, 18, 2
   SELINP,  ND, 9580, 9660, 1, 2
INITSEL,ALL,1,0
INITSEL,EL,1,2
DND,9579,AL,0,9660,81
DND,6621,UX,0,8050,1429,UZ,RX,
C* R_STATIC
C*
```

```
*****************************************************************
*****************************************************************
**                                                             **
**                                                             **
**        CCC     OO      SSS    M    M     OO      SSS        **
**       C       O  O    S       MM  MM    O  O    S           **
**       C       O  O     SS     M MM M    O  O     SS         **
**       C       O  O       S    M    M    O  O       S        **
**        CCC     OO     SSS     M    M     OO     SSS         **
**                                                             **
**                                                             **
**                      VERSION: 2.85                          **
**                     DISTRIBUTED BY:                         **
**      STRUCTURAL  RESEARCH  AND  ANALYSIS  CORPORATION       **
**               12121 WILSHIRE BLVD. SUITE 700                **
**            LOS ANGELES,    CALIFORNIA    90025              **
**               TEL. NO.   (310)  207-2800                    **
**             COPYRIGHT  1988-2003 S. R. A. C.                **
**                                                             **
*****************************************************************
*****************************************************************
Problem name: tankH
Date        : 04/22/2004     Time:   14:50:07
Title       : V-TANK LIFT ANALYSIS
Subtitle    : Empty Tank with Wall Thickness = 3/16 inches

UNITS: inches and pounds

Element group data
------------------
 Element group number=    1
 Element name:
 SHELL4   Four  node  thin  shell elements
  Type of Shell element= . . . . . . . . . . . . . .    2
    EQ. 0 ; QUAD 2  element
    EQ. 1 ; QUAD 4  element
    EQ. 2 ; QUAD    element
 Element group number=    2
 Element name:
 SHELL3   Three node  thin  shell elements
 Element group number=    3
 Element name:
 BEAM3D   Three dimensional Elastic Beam elements
  Type of beam element = . . . . . . . . . . . . . .    0
    EQ. 0 ; Symmetric beam element
    EQ. 1 ; Unsymmetric beam element
    EQ. 2 ; Symmetric tapered beam element
 Element group number=    4
 Element name:
 TRUSS3D  Three dimensional Truss / Spar elements


Real constant data
------------------
 Real constant set     1
 Associated with :
 SHELL4   Four  node  thin  shell elements
  Thickness of the plate =   0.12500
  Temperature Gradient   =    0.0000
 Real constant set     2
 Associated with :
 BEAM3D   Three dimensional Elastic Beam elements
  Area                                    =    5.0000
  Moment of Inertia about element Y-axis =    10.417
  Moment of Inertia about element Z-axis =   0.41667
  Depth of beam (y-axis)                  =    1.0000
  Width of beam (z-axis)                  =    5.0000
  End release code (I-node)  [000000]     =         0
  End release code (J-node)  [000000]     =         0
  Moment of inertia about element x-axis =    1.4567
```

```
 Shear factor in the element y-axis     =    0.0000
 Shear factor in the element z-axis     =    0.0000
 Temp. difference in the element y-axis =    0.0000
 Temp. difference in the element z-axis =    0.0000
 Orientation angle                      =    0.0000
 Torsion const for max shear stress     =   0.97890
Real constant set     3
Associated with :
TRUSS3D  Three dimensional Truss / Spar elements
 Area      =    100.00
 Perimeter =    10.417


Material property data
----------------------
 Material property set    1
                                          Value      Temp curve no.
  EX    : X Elastic Modulus             0.28000E+08      0
  NUXY  : Poisson Ratio                 0.29000          0
  GXY   : XY Shear Modulus              0.11000E+08      0
  ALPX  : X thermal expansion           0.99000E-05      0
  DENS  : Mass Density                  0.75000E-03      0
  C     : Specific Heat                  46.000          0
  KX    : X thermal conductivity        0.22000E-03      0
 Material property set    2
                                          Value      Temp curve no.
  EX    : X Elastic Modulus             0.12000E+07      0
  NUXY  : Poisson Ratio                 0.28000          0
  GXY   : XY Shear Modulus              0.47000E+06      0
  ALPX  : X thermal expansion           0.16000E-04      0
  DENS  : Mass Density                  0.13000E-03      0
  C     : Specific Heat                  140.00          0
  KX    : X thermal conductivity        0.70000E-05      0
 Material property set    3
                                          Value      Temp curve no.
  EX    : X Elastic Modulus             0.10000E+11      0
  NUXY  : Poisson Ratio                 0.30000          0


Centrifugal and gravity loading information
-------------------------------------------
 Load Case Number =     1

       Acceleration in the X-direction =     0.0000
       Acceleration in the Y-direction =    -386.40
       Acceleration in the Z-direction =     0.0000
```

```
-------------------------------------------------------------------------
|            M A S S   M O M E N T   I N F O R M A T I O N              |
|-----------------------------------------------------------------------|
|MASS    0.101088E+02   |VOLUME  0.332850E+05   |WEIGHT  0.390605E+04   |
|-----------------------------------------------------------------------|
| MASS MOMENT OF INERTIA W.R.T. C.G.                                    |
|-----------------------------------------------------------------------|
|IX      0.315568E+05   |IY      0.718138E+05   |IZ      0.724637E+05   |
|-----------------------------------------------------------------------|
| MASS PRODUCT OF INERTIA W.R.T. C.G.                                   |
|-----------------------------------------------------------------------|
|PXY    -0.177860E-03   |PXZ     0.182637E-03   |PYZ    -0.207714E-03   |
|-----------------------------------------------------------------------|
| RADII OF GYRATION W.R.T. C.G.                                         |
|-----------------------------------------------------------------------|
|RX      0.558723E+02   |RY      0.842856E+02   |RZ      0.846662E+02   |
|-----------------------------------------------------------------------|
| CENTER OF GRAVITY                                                     |
|-----------------------------------------------------------------------|
|CGx     0.754559E-07   |CGy     0.104194E+01   |CGz     0.710492E-07   |
|-----------------------------------------------------------------------|
| PRINCIPAL MASS MOMENT OF INERTIA                                      |
```

P1	0.724634E+05	P2	0.718142E+05	P3	0.315568E+05
PRINCIPAL RADII OF GYRATION					
R1	0.846660E+02	R2	0.842859E+02	R3	0.558722E+02
PRINCIPAL AXES (DIRECTION COSINES IN ROWS W.R.T C.G)					
N_11	0.100000E+01	N_12	0.273972E-06	N_13	0.495803E-03
N_21	0.100000E+01	N_22	0.464838E-03	N_23	0.281026E-06
N_31	-0.230468E-06	N_32	0.495522E-03	N_33	0.464564E-03

Note: In the above table, WEIGHT is computed based on the user defined acceleration for the first Load Case

```
C O N T R O L   I N F O R M A T I O N
 NUMBER OF LOAD CASES . . . . . . . . . . . (NLCASE)  =        1
 SOLUTION MODE . . . . . . . . . . . . . . . (MODEX)   =        0
    EQ. 0, STATIC ANALYSIS
    EQ. 1, BUCKLING ANALYSIS
    EQ. 2, DYNAMIC ANALYSIS
 SOLVER TYPE . . . . . . . . . . . . . . . . .(ISOL)   =        0
    EQ. 0, DIRECT SPARSE SOLVER
    EQ. 1, DIRECT SKYLINE SOLVER
    EQ. 2, ITERATIVE SOLVER

 THERMAL LOADING FLAG . . . . . . . . . . . .(ITHERM)  =        0
    EQ. 0, NO THERMAL EFFECTS CONSIDERED
    EQ. 1, ADD TEMPERATURE EFFECT
 GRAVITY LOADING FLAG . . . . . . . . . . . .(IGRAV)   =        1
    EQ. 0, NO GRAVITY LOADING CONSIDERED
    EQ. 1, ADD GRAVITY LOADING EFFECT
 CENTRIFUGAL LOADING FLAG . . . . . . . . . .(ICNTRF)  =        0
    EQ. 0, NO CENTRIFUGAL LOADING CONSIDERED
    EQ. 1, ADD CENTRIFUGAL LOADING EFFECT
 IN-PLANE STIFFENING FLAG . . . . . . . . . .(INPLN)   =        0
    EQ. 0, NO IN-PLANE EFFECTS CONSIDERED
    EQ. 1, IN-PLANE EFFECTS CONSIDERED
 SOFT SPRING ADDITION FLAG . . . . . . . . . (ISOFT)   =        0
    EQ. 0, NO SOFT SPRING OPTION
    EQ. 1, SOFT SPRING ADDED

 SAVE DECOMPOSED STIFFNESS MATRIX FLAG . . . (ISAVK)   =        0
    EQ. 0, DO NOT SAVE DECOMPOSED K
    EQ. 1, SAVE DECOMPOSED K
 FORM STIFFNESS MATRIX FLAG . . . . . . . . .(IFORMK)  =        0
    EQ. 0, FORM STIFFNESS MATRIX
    EQ. 1, USE EXISTING DECOMPOSED STIFFNESS MATRIX

 SPIN SOFTENING FLAG . . . . . . . . . . . . (ISPIN)   =        0
    EQ. 0, NO SPIN SOFTENING EFFECTS CONSIDERED
    EQ. 1, SPIN SOFTENING EFFECTS CONSIDERED
 INERTIA RELIEF FLAG . . . . . . . . . . . .(IFORMK)   =        0
    EQ. 0, NO INERITA RELIEF EFFECTS CONSIDERED
    EQ. 1, INERITA RELIEF EFFECTS CONSIDERED
 RIGID CONNECTIONS FLAG . . . . . . . . . . (IRIGID)   =        0
    EQ. 0, HINGE CONNECTIONS BETWEEN SOLIDS & SHELLS
    EQ. 1, RIGID CONNECTIONS BETWEEN SOLIDS & SHELLS

T O T A L   S Y S T E M   D A T A
 NUMBER OF EQUATIONS . . . . . . . . . . . . .(NEQ)   =    57930
 MEAN HALF BANDWIDTH . . . . . . . . . . . . .(MM )   =       51
 NUMBER OF ELEMENTS. . . . . . . . . . . . . .(NUME)  =    12830
 NUMBER OF NODAL POINTS. . . . . . . . . . . .(NUMNP) =     9660

 ORIGINAL NO. OF MATRIX ELEMENTS . . . . . . .(NWK)   =  1431154
```

```
*************************************************************************
*        R E S P O N S E    P R I N T O U T    (LOAD CASE     1)       *
*************************************************************************

 MINIMUM/MAXIMUM DISPLACEMENTS

  NODE      9529          115          9657         4081         4567         3362
  MIN.  -9.14666E-03 -7.15458E-02 -2.82274E-02 -4.74714E-03 -8.07701E-04 -5.60831E-04

  NODE      5070         9660         9646         2641         5292         1158
  MAX.   1.13303E-03   0.0000      2.82271E-02  4.74943E-03  8.07703E-04  5.60834E-04

 MAXIMUM RESULTANT DISPLACEMENT

  NODE       495
  MAX.   7.17358E-02


        R E A C T I O N   F O R C E   F O R   L O A D   C A S E   N O.  1

  NODE   CSYS    Fx          Fy          Fz          Mx          My          Mz
  6621    0  -.5633      ---------- -.1286E-01 -1.696     ---------- ----------
  8050    0  0.4971      ---------- -.1286E-01 -1.696     ---------- ----------
  9579    0  0.6615E-01  1953.      0.1288E-01 -.4587E-03 -.1431E-04  10.44
  9660    0   0.000      1953.      0.1285E-01 -.4587E-03  0.000      0.000

 FOR REQUESTED                  (Global Cartesian Coord. System)
    NODES          FX          FY          FZ          MX          MY          MZ
 Total React. -.1490E-07 0.3906E+04 0.5960E-05 -.3393E+01 -.1431E-04 0.1044E+02


 TOTAL STRAIN ENERGY. . . . . . . . . . . =  0.118803E+03

 MAXIMUM NODAL VON MISES STRESS

  NODE     4063
  MAX.      5521.5
```

Appendix C

Tank Rigging and Lifting Design

This page intentionally left blank.

V-TANKS 3/04 P. BRAGASSA

EDF-4672

TANK REMOVAL OPTIONS:

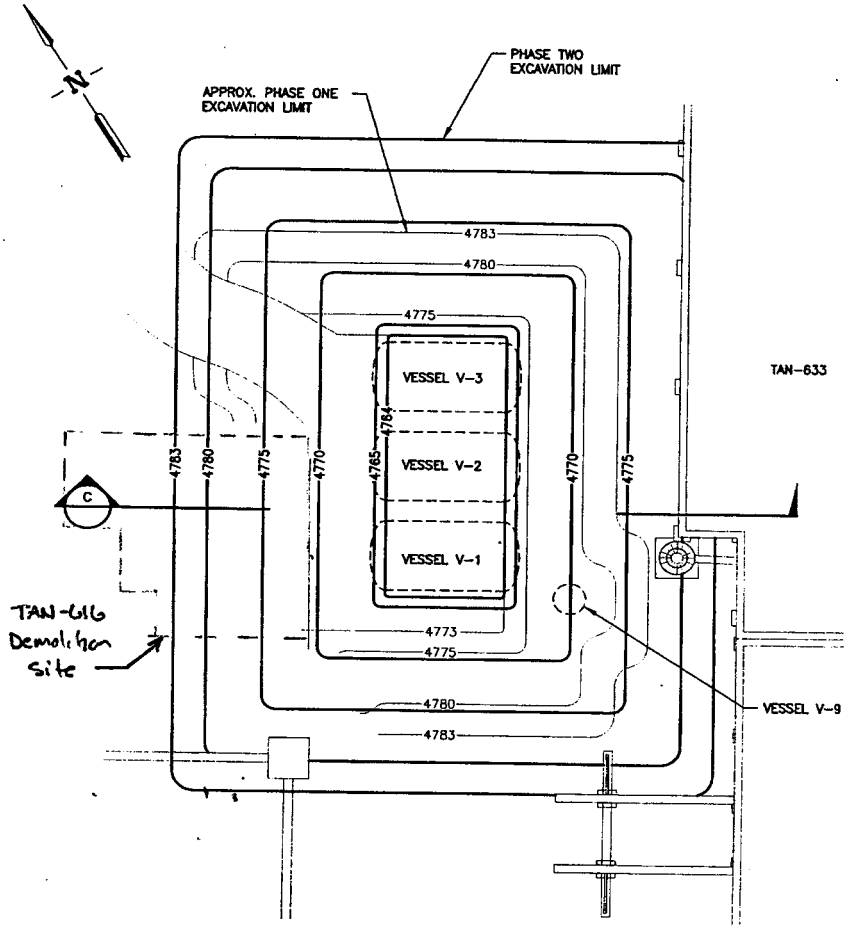

TANK EXCAVATION PLAN
SCALE: 1"=10.0'
(PHASE TWO EXCAVATION)

V-TANKS	3/04	P. BRAGA	C-2

EDF-4672

Tank wt:

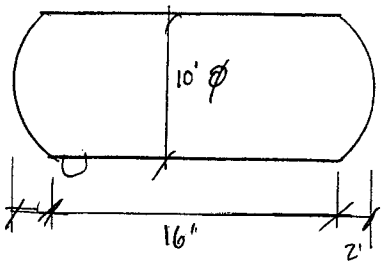

Tank wts: Surface Area: $2\pi r^2 + 2\pi r h$

$2\pi(5)^2 + 2\pi(5)(20) = 785.4$ sf

1/4" Plate 10.21 psf (8019)
3/8" Plate 15.32 psf
1/2" Plate : 20.42 psf

Assume 1/4" Plate: wt = 8,019 # (T&FRS)
From Analysis ≈ 8100 for MISC.

18" ϕ Sump approx 12" deep: V = 1.77 cf ≈ 230# 115 pcf 130 pcf

For 2' Grout: V = 233.4 cf wt = 26,842 # 30342 + 230 = 30572# Sump

3' Grout. V = 430.2 cf wt = 49,473 # 55,926 + 230 = 56,156#

Grout unit wt: 115 pcf
130 pcf

V-9

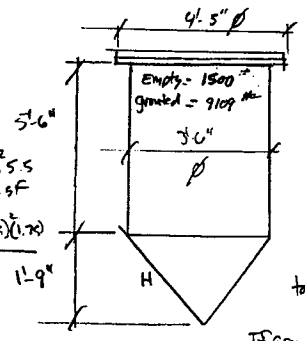

STEEL:

$C = \pi(3.5') = 10.995 \approx 11'$

$A = 11' \times 5.5' = 60.5$ sf

$V_C = \pi(1.75)^2 5.5$
$= 52.92$ sf

CONE: $A = \pi R H$
$= \pi(1.75)' 2.47'$
$= 13.6$ sf

$V = \frac{\pi r^2 h}{3} = \frac{\pi(1.75)^2(1.75)}{3}$
$= 5.61$ cf

$A = \pi\frac{(4.416)^2}{2}(2)$
$=$
$A = 30.63$ sf (Flanges)

wt = 1021 psf (30 G)
$= 312.75$#

total V = 52.92 + 5.61 cf
= 58.53 cf

If grouted = 58.53 cf (130 pcf)
= 7609 #

Total Surface Area = 13.6 + 60.5 = 74.1 sf

1/4" = 10.21 (74.1) = 756.6#

3/8" = 15.32 (74.1) = 1135.2#

Total Tank Wt:

1/4" = 756.6 + 312.75 = 1069.#

3/8 = 1135.2 + 312.75 = 1448 #

use 1100#

V-TANK 3/04 P. BRAGASSA

EDF-4672

TANK REMOVAL OPTIONS - AVAILABLE PICK RADII

TANK Weights:

V-1, V-2, V-3 = 8100# # (1/4" steel)

V-9 = 1,000# Empty
8219# Grouted full

CRANE Location #2
Reach Radii 50', 63', 76'
85' to V-9

CRANE
Location #1
OVER TAN-616
Demo site.

Reach Radii
V-1, V-2, V-3 55'
V-9 70'

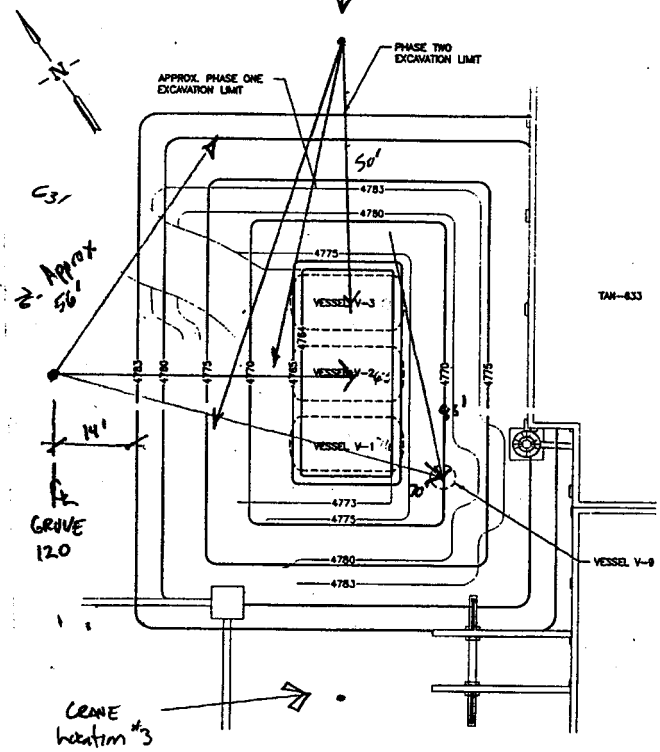

Reach Radii
V-1 50'
V-2 63'
V-3 76'
V-9 45'

V-TANK 3/04 P. BRACASSA

EDF-4672

Reach Summary:

Preliminary Scaled Reach

CRANE Location:	V-1	V-2	V-3	V-9
#1	55'	55'	55'	70'
#2	76'	63'	50'	85'
#3	50'	63'	76'	45'

SITE PREP:

Site #1: Will Require Substantial Compaction and backfill prior to use. TAN-616 Demolition will excavate this area and may be still on-going during time-frame of lift.

Site #2: Pipe Line was Excavated Adjacent to Site. Site Prep may be required but not as extensively as #1. Compact site with Roller and crib outriggers.

Site #3: Least amount of Disturbance in this area. Site is somewhat Confined by 607, 633 crane Runway, excavation and TAN-616 disturbance.

Recommendation: Since the site condition is somewhat risky at site #1 mainly due to the potential for interference from 616 demo operations, site 2 and 3 may be more advantages for planning. The crane reach is longer if only one set-up is desired. The site selection is also dependent upon the crane available.

Preliminary CAPACITIES:
GROVE TM9120 CRANE (D&D crane) CAPACITIES: (From Attached Load charts)

Reach Radius	12,000 # Counterweight	30,000 # Counterweight
50	28.1K	38.3K
60	19.4K	27.3K
70	13.7K	20.1K
80	9.6K	15.1K
90	6.72K	13.7K

V-TANKS 4/04 P. BRAGASSA

EDF-4672

GROVE TM9120 LOADING ANALYSIS

Load Capacity Determination:

Load Handling Equipment weights to be included in Load:

130 ton Hook Block	3483#	(Grove Manual pg 6)
15 ton Headache Ball	803#	
Wire Rope	300#	(Assume)
Rigging & Misc	400#	
	4986# ≈ 5000#	

Retractable Jib: 33-58 ft (Reduce main boom chart capacities)

Stowed: 1154# (when using only main boom and jib is stowed at base)

Erected but Retracted: 8474# (using main boom but jib is erected but not used)

Total Additional Loads: 5000# + 1154# = 6154# (Jib stowed)

For Main Boom 42-130', 30,000# Counterweights, 360° Rotation
100% outriggers

Chart pg 7, Grove Manual

Reach Radius	Boom Angle	Boom length	Capacity
40'	60°	100 ft	40.3K
50'	60°	115 ft	31.75K
60'	50°	115 ft	26.4K
70'	50°	130 ft	20.65K
80'	40°	130 ft	17.65K
90'	40°	130 ft	* 13.9K * Below tip line

(Boom angles rounded down)

V-TANKS 4/04 P. BRUGGASS

EDF-4672

CRANE Location #1 North side of Excavation:

TANK	Required Reach Radius	Gross wt (lbs)	Net (6154#+) wt (lbs)	130 ft Boom capacities
V-3	52' ≈ 60'	8100	14,254	26,400#
V-2	65' ≈ 70'	8100	14,254	20,650#
V-1	78' ≈ 80'	8100	14,254	17,650#
V-9	85.7' ≈ 90'	1100	7254	13,900# (Below tip line)

(Radii are rounded up.)

Check the effect of using the 33' JIB.

Try 33' JIB.

For 130' Boom with 33-58' ft JIB, 100% outriggers, 360° Rotation
30,000# Counter weight (Grove chart 16) 2° offset of JIB.

Radius	Boom Angle	Boom Length	Capacity	
40'	77°	130' + 33'	21.3K	> 13.1K
50'	73°	163'	18.7K	> 13.1K
60'	69°	163'	16.6K	> 13.1K
70'	65°	163'	15.K	> 13.1K
80'	61°	163'	13.6K	> 13.1K
90'	56.5°	163'	12.45K	> 6.1K

- Boom Angle directly from chart

This chart is for the JIB attached and includes weight of JIB.

∴ Net Loads = 8100 + 5000 = 13,100#
1100 + 5000 = 6100#

Capacity on 80' reach too close to load (13.6 vs 13.1)
* use main boom. *

V-TANKS 4/04 P. BRAGASSA

EDF-4672

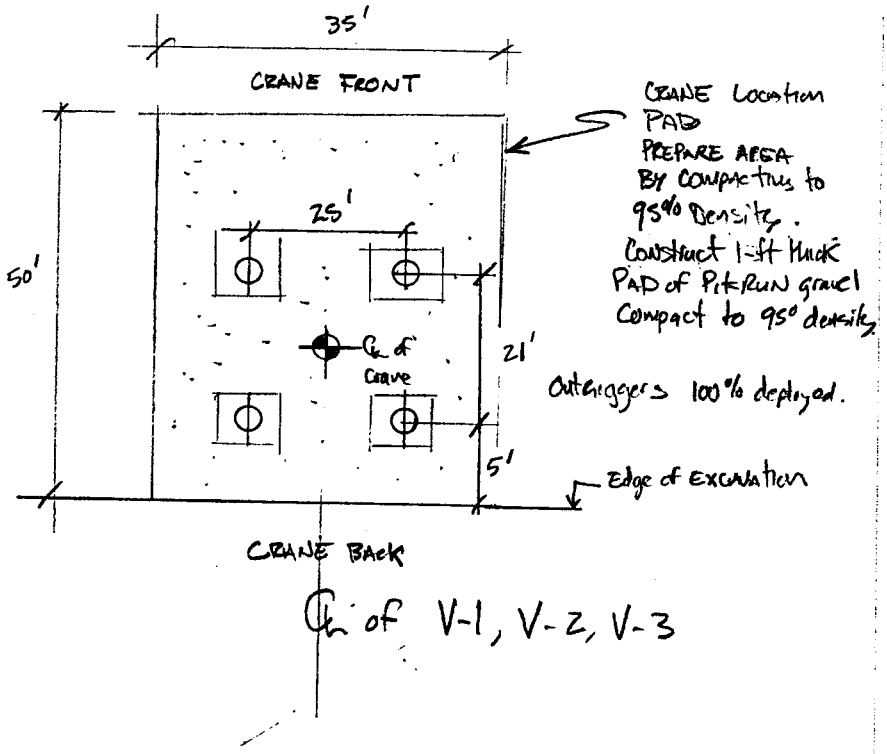

CRANE Position Diagram

V-Tanks 4/04 P. Bragança

EDF-4672

CRANE LOAD CAPACITY NOTES:

CRANE: GROVE TM 9120

Boom: 130' MAIN BOOM (JIB stowed)

Counterweights: 30,000 lbs

Outriggers: 100% Deployed

Load Capacities Based on 360° of Rotation

Loads:

130 TON Hook Block: 3483 lbs

15 ton Headache Ball: 803 lbs

Wire Rope: 300 lbs

Rigging & MISC: 414 lbs

Total Added Loads: 5000 lbs

Retractable JIB: 1154 lbs (stowed)

Total Additional loads: 6154 lbs

	TANK	ESTIMATED REACH Radius (ft)	BOOM ANGLE	BOOM Length	Capacity (lbs)	GROSS TANK Load (lbs)	Net total Load (lbs)
LIFTING TANKS FROM EXCAVATION	V-3	60	59°	115 ft	26,400	8100	14,254
	V-2	70	58.5°	130 ft	20,650	8100	14,254
	V-1	80	52.5°	130 ft	17,650	8100	14,254
	V-9	90	46.5°	130 ft	13,900	1100	7254
MOVING Load to Staging Area	SWING	40'	73.5°	130 ft (max)	35,950	—	—

C-10
EDF-46

GROVE CRANE

TM9120

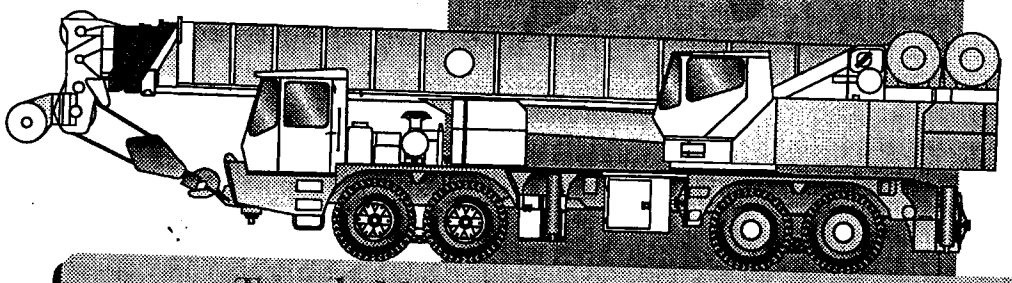

Truck Mounted Hydraulic Crane

C-1
EDF-4672

Dimensions

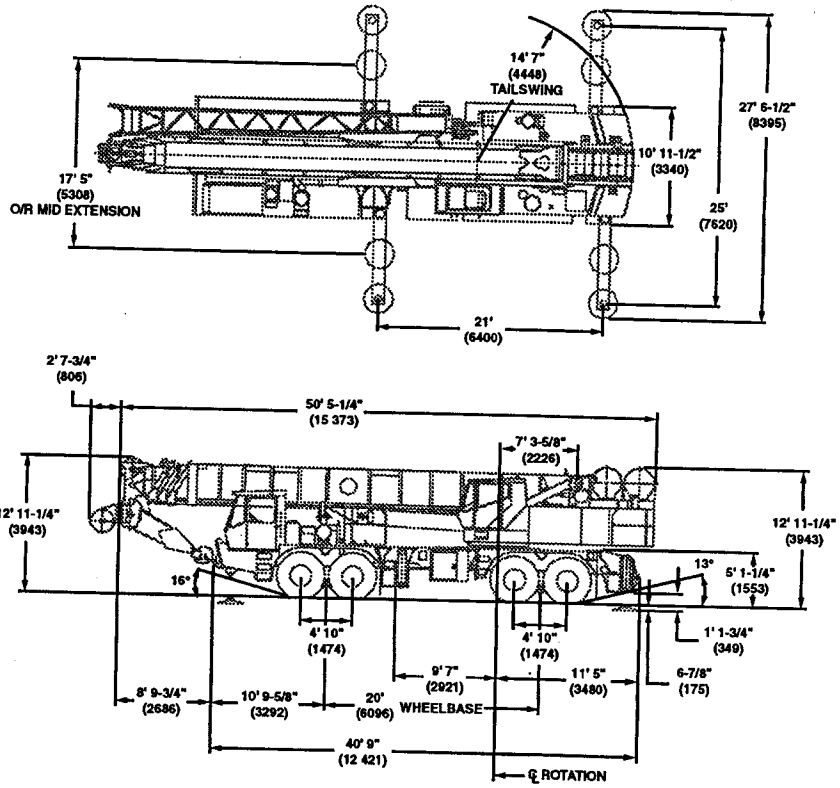

Note: ( ) Reference dimensions in mm

POUNDS (KILOGRAMS)	FRONT TANDEM	REAR TANDEM	TOTAL WEIGHT	MAX. SPEED
Equipped as above	58,183 lbs. (26 392 kg)	71,821 lbs. (32 578 kg)	130,004 lbs. (58 970 kg)	30 MPH (48.2 KPH)
12,000 lbs. portion cwt. on S/S	52,868 lbs. (23 891 kg)	89,136 lbs. (40 432 kg)	142,004 lbs. (64 413 kg)	30 MPH (48.2 KPH)
12,000 lbs. + 18,000 lbs. cwt. on S/S	44,895 lbs. (20 364 kg)	115,109 lbs. (52 213 kg)	160,004 lbs. (72 578 kg)	10 MPH (16 KPH)
Remove all cwt., O/R boxes & hookblock	50,328 lbs. (22 829 kg)	60,946 lbs. (27 645 kg)	111,274 lbs. (50 474 kg)	50 MPH (80.46 KPH)
Remove all cwt., O/R boxes, hookblock, teleswingaway	46,647 lbs. (21 159 kg)	60,485 lbs. (27 436 kg)	108,054 lbs. (48 595 kg)	50 MPH (80.46 KPH)
Components				
33 - 58' (10 - 17.7 m) teleswingaway	+3,681 lbs. (1670 kg)	-461 lbs. (-209 kg)	+3,220 lbs. (1461 kg)	
Front O/R box	+5,002 lbs. (2269 kg)	+2363 lbs. (1072 kg)	+7,365 lbs. (3341 kg)	
Rear O/R box w/floats	-2,944 lbs. (-1335 kg)	+10,882 lbs. (4936 kg)	+7,938 lbs. (3601 kg)	
Non-supply aux. hoist	+723 lbs. (327 kg)	-2,323 lbs. (-1053 kg)	-1,600 lbs. (-725 kg)	
130 ton hookblock	+5,797 lbs. (2629 kg)	-2,370 lbs. (-1075 kg)	+3,427 lbs. (1554 kg)	

Note: Weights may vary due to manufacturing tolerances and scale accuracy.

C-
EDF-4672

Working Range

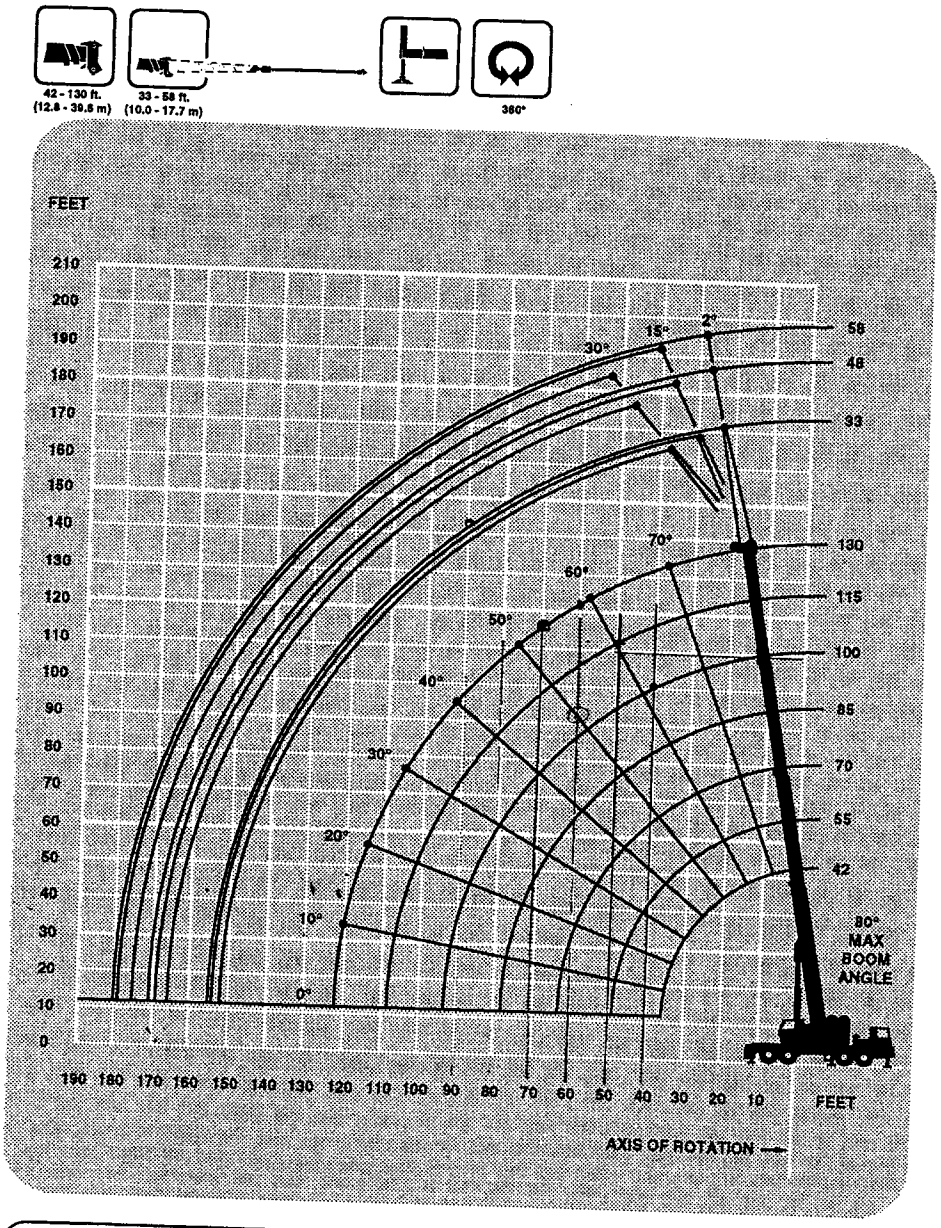

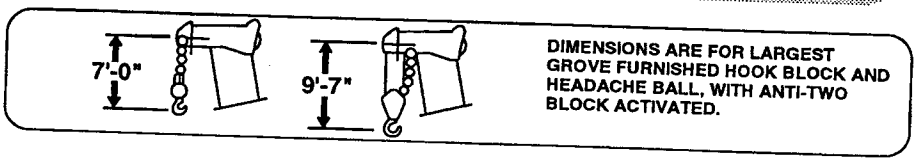

3

TM9120

C-1:
EDF-4672

Superstructure specifications

Boom
42 ft. - 130 ft. (12.8 m - 39.6 m) four-section full power boom. Maximum tip height: 139 ft. (42.4 m).

Telescoping Swingaway Extension
33 ft. to 58 ft. (10 m to 17.7 m) telescoping lattice swingaway boom extension offsettable at 2°, 15° or 30°. Stows alongside base boom section.
Maximum tip height: 195 ft. (59.4 m) .

*Optional Fixed Swingaway Extension
33 ft. (10 m) lattice swingaway boom extension offsettable at 2°, 15° or 30°. Stows alongside base boom section. Maximum tip height: 171 ft. (52.1 m).

Jibs
23 ft. (7.0 m) base section combines with lattice inserts and point section for lengths of 74, 88, 102 and 116 ft. (22.6, 26.8, 31 and 35.3 m) offsettable at 10°, 17° and 30°. Maximum tip height: 248 ft. (75.6 m).

Boom Nose
Six low friction nylatron sheaves mounted on heavy duty tapered roller bearings with removable pin-type rope guards. *Optional removable auxiliary boom nose with removable pin-type rope guards.

Boom Elevation
One double acting hydraulic cylinder with integral holding valve provides elevation from -3° to 80°.

Load Moment & Anti-Two Block System
Standard load moment and anti-two block system with audio-visual warning and control lever lock-out. These systems provide electronic display of boom angle, length, radius, tip height, relative load moment, maximum permissible load and load indication and warning of impending two-block condition.

Cab
Full vision, all steel fabricated with acoustical lining and tinted safety glass throughout. Deluxe seat incorporates armrest mounted hydraulic joystick controls. Dash panel incorporates gauges for all engine functions. Other standard features include: sliding side and rear windows, electric windshield wash/wipe, circulating air fan, opening skylight with electric skylight wiper, fire extinguisher, and seat belt.

Swing
Ball bearing swing circle with 360° continuous rotation. Planetary swing with foot applied multi-disc wet brake. Spring applied, hydraulically released parking brake, plunger type, mechanical house lock, operated from cab. Maximum speed: 2.0 RPM.

Counterweight
Two piece: 18,000 lbs. (8165 kg) and 12,000 lbs. (5443 kg). Total: 30,000 lbs. (13 608 kg), power removable.

Engine
Cummins 6CTA8.3, 6-cylinder turbo-charged, after cooled diesel, 250 hp (186 kW) @ 2,200 RPM.
Maximum torque: 716 ft. lbs. (971 Nm) @ 1,500 RPM.

Hydraulic System
Six main pumps with a combined capacity of 216 G.P.M. (818 LPM).

Precision four way double acting pilot operated control valves. Three individual valve banks permit simultaneous control of multiple crane functions.

Return line type filter with full flow by-pass protection and service indicator. Replaceable cartridge with micron filtration rating of ISO 4406 Class 17/14.

280 gallon (1060 L) reservoir.

Remote-mounted oil cooler with thermostatically controlled hydraulic motor driven fan.

System pressure test panel with ORSF type fittings.

HOIST SPECIFICATIONS
Variable displacement piston motor with pressure override for infinitely variable speed, powered in both up and down directions. Planetary reduction with automatic spring applied multi-disc brake. Grooved drum for improved spooling. Spring tension cable follower. Electronic hoist drum rotation indicator.

		Main and Auxiliary Hoist Grove HO50-26G
Make/Model		
Maximum Single Line Speed:	Bottom layer	300 FPM (91 m/min)
	Intermediate layer	352 FPM (107 m/min)
	Top layer	405 FPM (123 m/min)
Maximum Single Line Pull:	Bottom layer	26,894 lbs. (12 199 kg)
	Intermediate layer	22,869 lbs. (10 373 kg)
	Top layer	19,893 lbs. (9023 kg)
Maximum Permissible Line Pull w/5:1 Strength Factor:		22,760 lbs. (10 324 kg)
Maximum Rope Stowage:		1,000 ft. (307 m) 1 in. (25.4 mm)

Note: 800 ft. (244 m) length of rope supplied with basic standard unit.
Note: Line speed is load dependent. Boosted flow is available to enhance line speed under load.

*Denotes optional equipment

C-14
EDF-4672

Carrier specifications

Chassis
Triple box section frame fabricated from high strength, low alloy steel with removable outrigger housings.

Outrigger System
Hydraulic telescoping, single stage, double box beam outriggers with inverted jacks and integral holding valves. Three position setting: 0%, 50% and fully extended. Intermediate position pins manually. Quick release type outrigger floats 30.5 in. (775 mm) diameter. Standard fifth front stabilizer with 24 in. (635 mm) diameter float.
Maximum outrigger pad load: 154,167 lbs. (76 249 kg)

Outrigger Controls
Located in the superstructure cab and both sides of the carrier, require two hand operation. Crane level indicator (sight bubble) adjacent.

Engine
Cummins N14-460E six cylinder turbo-charged and after cooled diesel, 855 cu. in. (14 L) 460 hp (343 kW) @ 1,600 RPM, 350 hp (261 kW) @ 2,100 RPM.
Maximum torque: 1,550 ft. lbs. (2102 Nm) @ 1,200 RPM with engine brake and audio-visual engine distress system.

Fuel Tank Capacity
100 gallons (376 L).

Electrical System
Two 12 V - maintenance free batteries. 12 V lighting/ 24 V starting.

Drive
8 x 4

Steering
Front axles, mechanical with hydraulic power assist controlled by steering wheel with auxiliary ground driven steer pump.

Transmission
Roadranger 10 speeds forward, 3 reverse.

Auxiliary Transmission
Roadranger 2 speed remote mounted.

Axles
Front: (2) beam type steering axles, 115 in. (2.92 m) track (14.00R24 tires). 114 in. (2.9 m) track (17.5R25 tires and 22/65R25 tires).
Rear: (2) planetary drive, 100 in. (2.54 m) track.

Brakes
Dual line air split system operating on all wheels. Spring-applied, air released parking brake operating on rear axles. Air dryer.

Tires
Front: 14.00R24 highway tread steel-belted radial singles.
Rear: 14.00R24 highway tread steel belted radial duals.

*Optional Tires
Front: 14.00 x 24 (24PR) highway tread bias-ply singles. 17.5R25 highway tread tubeless singles. 22/65R25 tubeless singles.
Rear: 14.00 x 24 (24PR) highway tread bias-ply duals. 14.00 x 24 (20PR) lug type bias-ply duals.

Suspension
Front: Spring mounted tandem.
Rear: Solid mounted tandem with equalizing beam.

*Optional Suspension
Front: Solid mounted tandem with equalizing beam.

Lights
Full lighting package including turn indicators, head and tail lights, brake and hazard warning lights.

Cab
One man design, all steel fabricated with acoustical lining and tinted safety glass throughout. Deluxe fabric covered fully adjustable seat. Complete driving controls and engine instrumentation including tachometer, speedometer, voltmeter, water temp. oil pressure, fuel level, air pressure gauge with A/V warning and engine high temp./low oil pressure A/V warning. Other standard items include hot water heater/defroster, electric windshield wash/wipe, fire extinguisher, seat belt and door and window locks.

Maximum Speed
50 mph (80.46 kph)

Gradeability (Theoretical)
65%

Gross Vehicle Weight
BASIC STANDARD MACHINE (in travel mode)
G.V.W.: 109,500 lbs. (49 669 kg)

Miscellaneous Standard Equipment
Full width aluminum fenders, dual rear view mirrors, electronic back-up alarm, sling/tool box, pump disconnect, emergency steering, tire inflation kit, air cleaner restriction indicator, front tow lugs, and component handling slings.

*Optional Equipment
- 360° rotating beacon
- Cab spotlight
- Engine block heater
- Hookblocks
- Tool kit
- Trailing boom kit

*Denotes optional equipment

C-1
EDF-46

Weight Reductions for Load Handling Devices

33 ft. (10 m) Fixed Boom Extension with 42 ft. - 130 ft. (12.8 m - 39.6 m) Boom

*Stowed	932 lbs.	(423 kg)
*Erected	6,185 lbs.	(2806 kg)

33 ft. - 58 ft. (10 m - 17.7 m) Tele Boom Extension with 42 ft. - 130 ft. (12.8 - 39.6 m) Boom

*Stowed	1,154 lbs.	(523 kg)
*Erected (Retracted)	8,474 lbs.	(3844 kg)
*Erected (Extended)	10,911 lbs.	(4949 kg)

23 ft. (7.0 m) Boom Extension with 42 ft. - 130 ft. (12.8 m - 39.6 m) Boom

*Erected	4,566 lbs.	(2071 kg)

Fixed Jibs with 28 ft. (8.5 m) Jib Extension and 42 ft. - 130 ft. (12.8 m - 39.6 m) Boom

* 74 ft. Jib Erected	12,983 lbs.	(5889 kg)
* 88 ft. Jib Erected	17,146 lbs.	(7777 kg)
* 102 ft. Jib Erected	22,114 lbs.	(10 031 kg)
* 116 ft. Jib Erected	25,786 lbs.	(11 697 kg)
Fixed Jib Accessories	100 lbs.	(45 kg)

*Reduction of main boom capacities:

When lifting over swingaway and/or jib combinations, deduct total weight of all load handling devices reeved over main boom nose directly from swingaway or jib capacity.

NOTE: All load handling devices and boom attachments are considered part of the load and suitable allowances MUST BE MADE for their combined weights. Weights are for Grove furnished equipment.

Auxiliary Boom Nose	260 lbs.	(118 kg)
Hookblocks and Headache Balls:		
+ 30 ton, 1 sheave	1,022 lbs.	(464 kg)
+ 45 ton, 2 sheave	1,002 lbs.	(455 kg)
+ 130 ton, 6 sheave	3,483 lbs.	(1580 kg)
+ 15 ton headache ball	803 lbs.	(364 kg)

+Refer to rating plate for actual weight.

C-16

EDF-4672

42 - 130 ft. (12.8 - 39.6 m) | 30,000 lbs. (13 608 kg) | 100% | 360°

Pounds

(Feet)	Fly Fully Retracted (Fly Lock Pin Disengaged) 42	55	70	85	100	Fly Extended 115	130
10	240,000 (72)						
12	209,500 (69)	124,500 (74.5)	123,500 (78)				
15	179,500 (64)	124,500 (71)	123,500 (75.5)	92,400 (79)			
20	131,000 (55.5)	124,500 (65.5)	111,500 (71)	78,600 (75.5)	69,000 (78.5)		
25	101,000 (45)	101,000 (59)	95,700 (66.5)	67,450 (72)	59,250 (75.5)	54,000 (78)	42,000 (80)
30	80,700 (33.5)	80,700 (52.5)	80,650 (62)	59,100 (68)	51,350 (72.5)	49,700 (75.5)	42,000 (79)
35		66,550 (45)	66,500 (57)	52,600 (64.5)	45,200 (69.5)	43,650 (73)	40,450 (75.5)
40		56,000 (36)	56,000 (52)	46,500 (60.5)	40,300 (66)	38,900 (70.5)	35,950 (73.5)
45		46,300 (23.5)	46,300 (46)	41,550 (56.5)	36,100 (62.5)	35,000 (67.5)	32,250 (71)
50			38,300 (39.5)	37,500 (52)	32,600 (59.5)	31,750 (64.5)	29,200 (68.5)
60			27,300 (20.5)	27,300 (42)	27,000 (52)	26,400 (59)	24,450 (63.5)
70				20,150 (29)	20,150 (43.5)	22,200 (52.5)	20,650 (58.5)
80					15,100 (33.5)	17,450 (45.5)	17,850 (52.5)
90					11,000 (18)	13,700 (37)	13,900 (46.5)
100						10,800 (26)	10,650 (39)
110							8,480 (30.5)
120							6,510 (18.5)
Minimum boom angle (deg.) for indicated length (no load)							0
Maximum boom length (ft.) at 0 degree boom angle (no load)							130

NOTE: ( ) Boom angles are in degrees.

A6-829-010913A

Boom Angle	42	55	70	85	100	115	130
0	37,150 (34.4)	24,550 (47.7)	16,000 (62.7)	10,500 (77.7)	6,630 (93.0)	5,936 (107.7)	4,130 (122.4)

NOTE: ( ) Reference radii in feet.

A6-829-011003A

THIS CHART IS ONLY A GUIDE AND SHOULD NOT BE USED TO OPERATE THE CRANE. The individual crane's load chart, operating instructions and other instructional plates must be read and understood prior to operating the crane.

V-TANKS 4/03 P. BRAGLIA

EDF-4672

CRANE OUTRIGGER LOADS:

GROVE 120 TM 9120 30,000# Counterweight

VERIFY outriggers Loads For Max Load and Reach

Assume empty V-9 wt: ...

Boom Angle = 45°

Reach = 85.7'

1) Determine load For straight pick (Load in-line with Front)

2) Determine Load For 70° Angle (For swings) over one outrigger

3) Determine Load For 45° Angle over one outrigger.

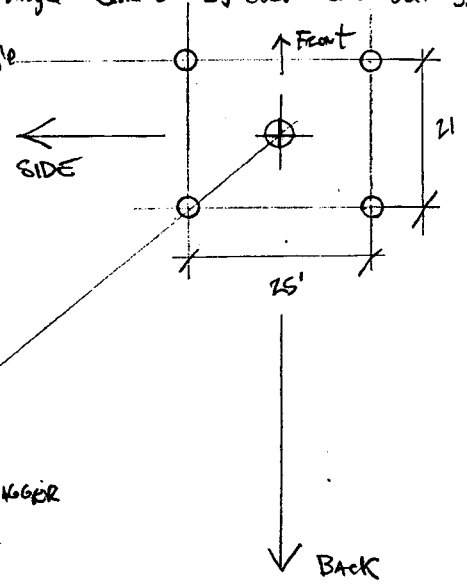

USING STAAD.PRO 2003 Computer Program and GROVE 120 Model Analyze Crane Reactions on Following Pages.

V-TANKS 4/03 P. BRACKASSA

EDF-4672

CRANE OUTRIGGER LOADS:

45° Boom Angle used for lifting V-1 from excavation at 80' radius (52.5° chart)

70° Boom Angle used for swinging load to staging area radius 40'

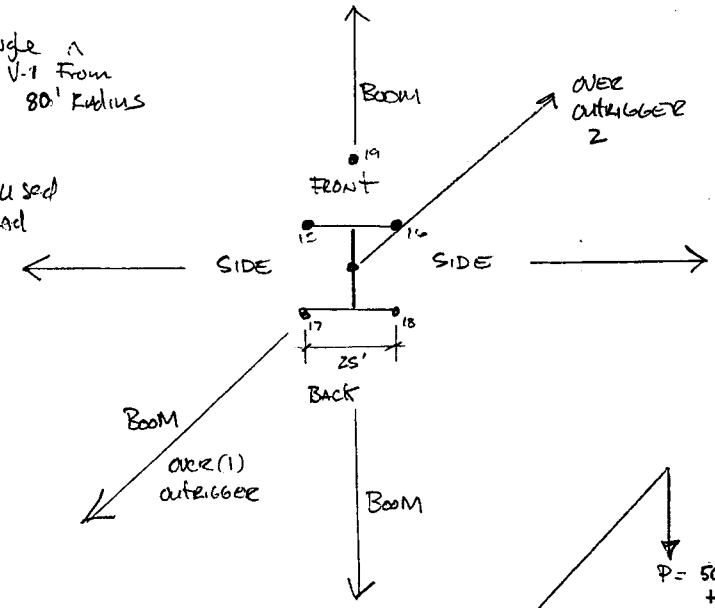

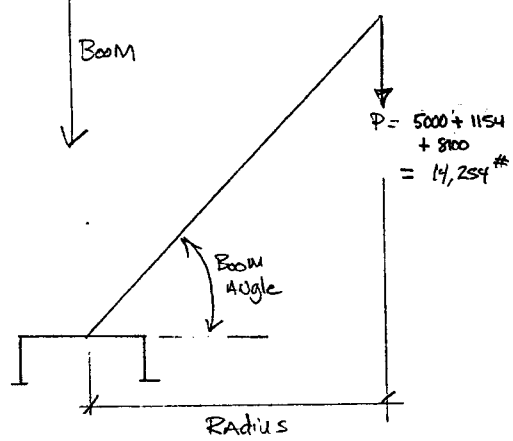

OUTRIGGER REACTIONS (MAX)

Location:	Boom Angle 45° 14,254K Load
BACK	62.15K
FRONT	73.8K
SIDE	85.3K
outrig 1	67.43K
outrig 2	73.18K

DESIGN outrigger support for 73.8K.

Side loading at 45° will be prohibited. (Swing will be at 70° boom angle)

Check side load @ 70°

Max reaction: 66.6K < 73.8 use 73.8

C-19

Software licensed to INEEL	Job No V-9	Sheet No 1	Rev EDF 4672
	Part		
Job Title V-Tanks Lifting	Ref		
	By Bragassa	Date 18-Mar-02	Chd
Client WAG-1	File 120Back_valt.std	Date/Time 14-Apr-2004 09:47	

Job Information

	Engineer	Checked	Approved
Name:	Bragassa		
Date:	18-Mar-02		

80' Radius
14.254K Load
45°
OFF Back Loading

Structure Type	SPACE FRAME

Number of Nodes	19	Highest Node	20
Number of Elements	18	Highest Beam	22

Number of Basic Load Cases	1
Number of Combination Load Cases	0

Included in this printout are data for:

All	The Whole Structure

Included in this printout are results for load cases:

Type	L/C	Name
Primary	1	LOADS DL + LL

Reactions

Node	L/C	Horizontal FX (kip)	Vertical FY (kip)	Horizontal FZ (kip)	Moment MX (kip-in)	MY (kip-in)	MZ (kip-in)
15	1:LOADS DL +	0.000	24.980	0.000	0.000	0.000	0.000
16	1:LOADS DL +	0.000	24.980	0.000	0.000	0.000	0.000
17	1:LOADS DL +	0.000	62.146	0.000	0.000	0.000	0.000
18	1:LOADS DL +	0.000	62.146	0.000	0.000	0.000	0.000
19	1:LOADS DL +	0.000	0.000	0.000	0.000	0.000	0.000

Software licensed to INEEL	Job No V-9	Sheet No 1	Rev C-20
	Part		EDF-4672
Job Title V-Tanks Lifting	Ref		
	By Bragassa	Date 18-Mar-02	Chd
Client WAG-1	File 120front.std	Date/Time 14-Apr-2004 09:50	

Job Information

	Engineer	Checked	Approved
Name:	Bragassa		
Date:	18-Mar-02		

Front Loading
80' Radius
14,254K Load
45°

Structure Type	SPACE FRAME

Number of Nodes	19	Highest Node	20
Number of Elements	18	Highest Beam	22

Number of Basic Load Cases	1
Number of Combination Load Cases	0

Included in this printout are data for:

All	The Whole Structure

Included in this printout are results for load cases:

Type	L/C	Name
Primary	1	LOADS DL + LL

Reactions

Node	L/C	Horizontal FX (kip)	Vertical FY (kip)	Horizontal FZ (kip)	Moment MX (kip-in)	MY (kip-in)	MZ (kip-in)
15	1:LOADS DL +	0.000	73.808	0.000	0.000	0.000	0.000
16	1:LOADS DL +	0.000	73.808	0.000	0.000	0.000	0.000
17	1:LOADS DL +	0.000	0.000	0.000	0.000	0.000	0.000
18	1:LOADS DL +	0.000	0.000	0.000	0.000	0.000	0.000
19	1:LOADS DL +	0.000	26.637	0.000	0.000	0.000	0.000

INEEL	Job No V-9	Sheet No 1	Rev C-21
Software licensed to INEEL	Part		EDF-4672
Job Title V-Tanks Lifting	Ref		
	By Bragassa	Date 18-Mar-02	Chd
Client WAG-1	File 120side.std	Date/Time 14-Apr-2004 09:56	

Job Information

	Engineer	Checked	Approved
Name:	Bragassa		
Date:	18-Mar-02		

SIDE Load
80' Radius
14.254K Load
45°

Structure Type	SPACE FRAME

Number of Nodes	19	Highest Node	20
Number of Elements	18	Highest Beam	22

Number of Basic Load Cases	1
Number of Combination Load Cases	0

Included in this printout are data for:

All	The Whole Structure

Included in this printout are results for load cases:

Type	L/C	Name
Primary	1	LOADS DL + LL

Reactions

		Horizontal	Vertical	Horizontal	Moment		
Node	L/C	FX (kip)	FY (kip)	FZ (kip)	MX (kip'in)	MY (kip'in)	MZ (kip'in)
15	1:LOADS DL +	0.000	85.318	0.000	0.000	0.000	0.000
16	1:LOADS DL +	0.000	16.904	0.000	0.000	0.000	0.000
17	1:LOADS DL +	0.000	59.258	0.000	0.000	0.000	0.000
18	1:LOADS DL +	0.000	1.246	0.000	0.000	0.000	0.000
19	1:LOADS DL +	0.000	11.528	0.000	0.000	0.000	0.000

Software licensed to INEEL	Job No V-9	Sheet No 1	Rev C-22
Job Title V-Tanks Lifting	Part		EDF-4672
	Ref		
	By Bragassa	Date 18-Mar-02	Chd
Client WAG-1	File 120outrig.std	Date/Time 14-Apr-2004 10:01	

Job Information

	Engineer	Checked	Approved
Name:	Bragassa		
Date:	18-Mar-02		

Load over 1 outrigger
(Back)
14.254K
80' Radius

Structure Type	SPACE FRAME

Number of Nodes	19	Highest Node	20
Number of Elements	18	Highest Beam	22

Number of Basic Load Cases	1
Number of Combination Load Cases	0

Included in this printout are data for:

All	The Whole Structure

Included in this printout are results for load cases:

Type	L/C	Name
Primary	1	LOADS DL + LL

Reactions

Node	L/C	Horizontal FX (kip)	Vertical FY (kip)	Horizontal FZ (kip)	Moment MX (kip-in)	MY (kip-in)	MZ (kip-in)
15	1:LOADS DL +	0.000	57.085	0.000	0.000	0.000	0.000
16	1:LOADS DL +	0.000	8.724	0.000	0.000	0.000	0.000
17	1:LOADS DL +	0.000	73.175	0.000	0.000	0.000	0.000
18	1:LOADS DL +	0.000	32.167	0.000	0.000	0.000	0.000
19	1:LOADS DL +	0.000	3.102	0.000	0.000	0.000	0.000

Software licensed to INEEL	Job No V-9	Sheet No 1	Rev C-23
	Part EDF-4672		
Job Title V-Tanks Lifting	Ref		
	By Bragassa	Date 18-Mar-02	Chd
Client WAG-1	File 120frontoutrig.std	Date/Time 14-Apr-2004 10:03	

Job Information

	Engineer	Checked	Approved
Name:	Bragassa		
Date:	18-Mar-02		

Load over 1 outrigger
Front side
80' Radius
14.254 K Load.

Structure Type	SPACE FRAME

Number of Nodes	19	Highest Node	20
Number of Elements	18	Highest Beam	22

Number of Basic Load Cases	1
Number of Combination Load Cases	0

Included in this printout are data for:

All	The Whole Structure

Included in this printout are results for load cases:

Type	L/C	Name
Primary	1	LOADS DL + LL

Reactions

Node	L/C	Horizontal FX (kip)	Vertical FY (kip)	Horizontal FZ (kip)	Moment MX (kip'in)	MY (kip'in)	MZ (kip'in)
15	1:LOADS DL +	0.000	67.434	0.000	0.000	0.000	0.000
16	1:LOADS DL +	0.000	18.804	0.000	0.000	0.000	0.000
17	1:LOADS DL +	0.000	40.738	0.000	0.000	0.000	0.000
18	1:LOADS DL +	0.000	0.000	0.000	0.000	0.000	0.000
19	1:LOADS DL +	0.000	47.276	0.000	0.000	0.000	0.000

Software licensed to INEEL	Job No	Sheet No 1	Rev C-24
	Part		EDF-4674
Job Title	Ref		
	By	Date 18-Mar-02	Chd
Client	File 1201outrig.std	Date/Time 12-Apr-2004 16:33	

STAADPRO Model

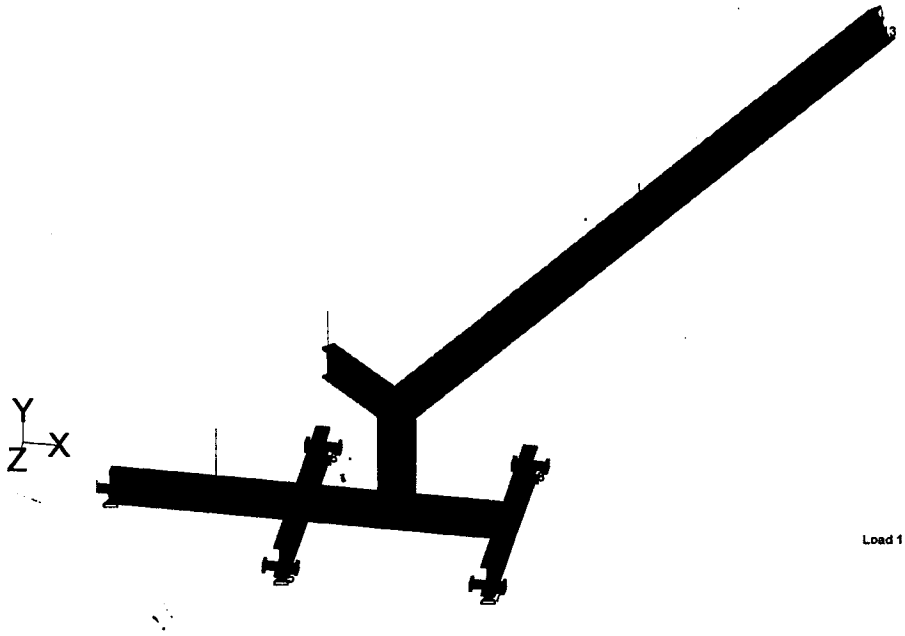

Load 1

V-TANKS	4/03	P. BRAGASSA	C-25

EDF-4672

CRANE OUTRIGGER SUPPORT

DESIGN PADS to support the maximum outrigger load. The ground area will be prepared by compaction to 95% max density and a 12" Pit run Gravel Pad prepared (compacted) The crane's back outriggers will be set 7' from the edge of the tank excavation. A slope stability analysis will be performed to verify the soil loading.

Assume Pad Provides a minimum Allowable soil Bearing Pressure of 4000 psf.

Will use the maximum calculated outrigger load = 73,800#

Try using Mats 4'x6' min, 6"x12" Railroad ties.

A = 4x6 = 24 sf using Bechtel Rigging Handbook Section 3.9.2

Bearing stress: $\frac{P}{A} = \frac{73,800}{24} = 3075 \text{ psf} < 4000$ ✓OK

Bending stress: $f = \frac{3qa^2}{d^2}$ where $q = 3075$ psf

$a = 21$ inch

$d = 12"$

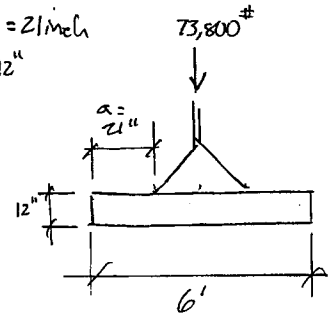

$$f = \frac{3\left(\frac{3075\#}{sf}\right)\left(\frac{1sf}{144in^2}\right)(21)^2}{12in^2}$$

$f = 196$ psi < $F_b = 825$ psi ✓OK

Shear: $V = \frac{1.5qa}{d}$

$$V = \frac{1.5\left(\frac{3075\#}{sf}\right)\left(\frac{1sf}{144}\right)(21)in}{12} = 56.05 \text{ psi} < 95 \text{ psi}$$ ✓OK

For 8" thick: V = 84 psi ✓OK

Use 6'x8' Mat constructed of 8"x12" Douglas Fir Railroad Ties. (as a minimum). 4'x4' Kedar mats should also be used to distribute loads to ties.

V-TANKS	4/04	P. BRAGASSA	C-

EDF-4672

OUTRIGGER SUPPORT

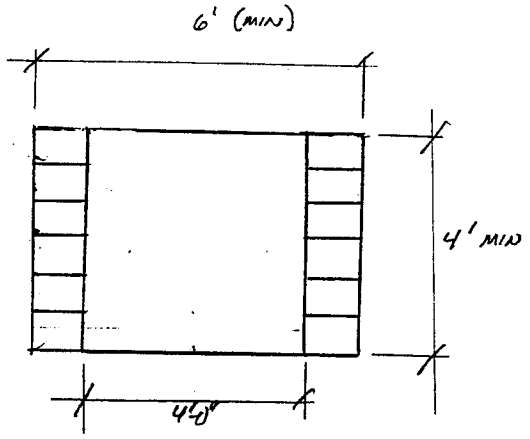

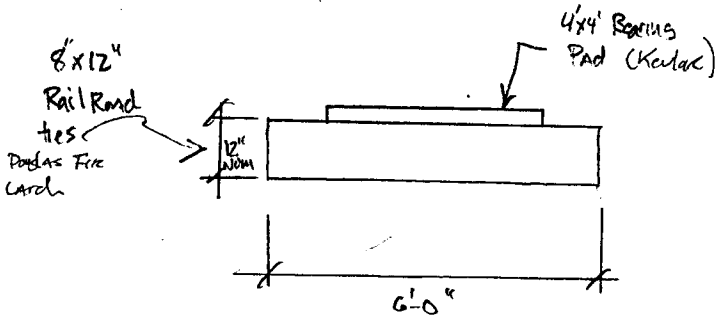

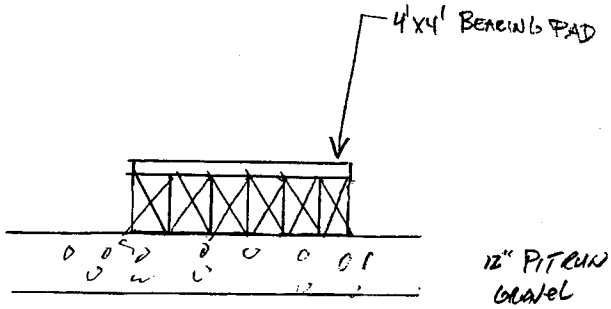

See Pg C-8 FOR CRANE Position Diagram

V-Tanks	4/04	PRAGASH	C-2

EDF-4672

VERIFY SLOPE STABILITY DURING TANK LIFT.

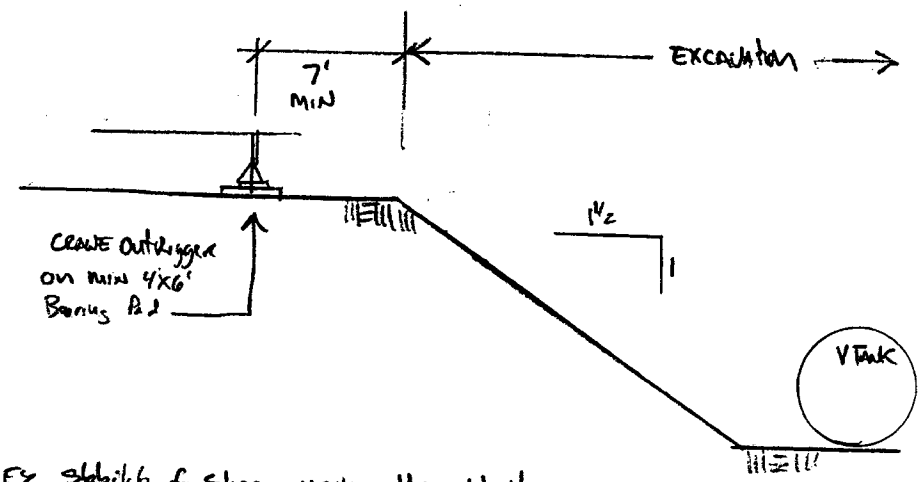

VERIFY stability of slope using the worst case outriggers loading. (73,800 #)

For Analysis use 4'x6' Pad as effective Bearing area.

$$\frac{73,800}{4'\times 6'} = 3075 \text{ psf} < 4000 \text{ psf Soil Bearing OK} \checkmark$$

Soil Parameters:

$\gamma = 115$ pcf
Cohesion = 400 psf } assumed
$\phi = 30°$

Factor of Safety Calculation. $F_S = \dfrac{\text{Average Shear Strength of Soil}}{\text{average shear stress developed along potential failure plain.}}$

Minimum Required FS = 1.5 (Principles of Geotechnical Engineering) pg 507

V TANKS	4/04	P. Bragasa	C-2

EDF - 4672

Slope stability:

For slope analysis; SB - Slope Computer Software will be used. (SB-Slope Software For Stability Analysis Van Gunten Engineering Software) (Version 2.0)

SB-Slope calculates the factor-of-safety of earth slopes using the Simplified Bishop Method of Analysis. This method utilizes circular failure surfaces, defined by the location of the center of the circle and its radius.

SB-Slope performs a search for the minimum Factor-of Safety by varying the circle center location and Radius, until a minimum has been determined. A surface load of 3075 psf over a 4' wide area will be applied.

SB-Slope Model.

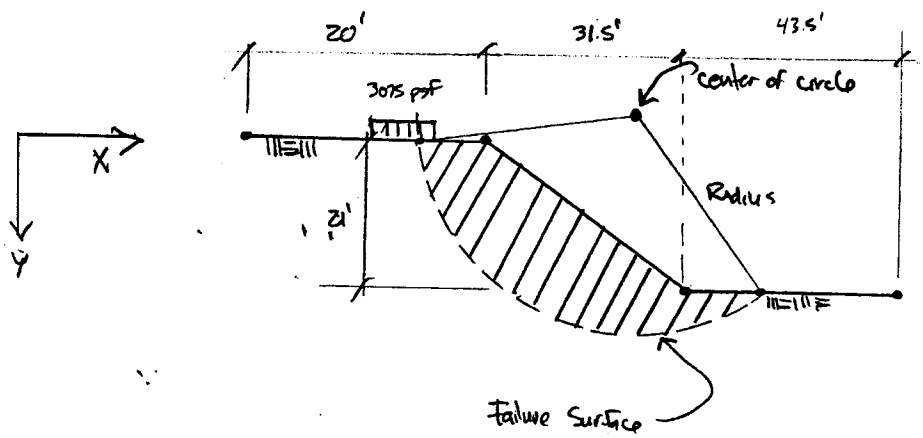

SB-Slope Results:

The minimum Factor of Safety was found at $X = 50'$
$Y = 30'$
$R = 50'$

$FS = 1.85$ ✓

V TANKS	4/04	P. BRAGASSA	C-2

EDF-4672

Minimum FS Configuration

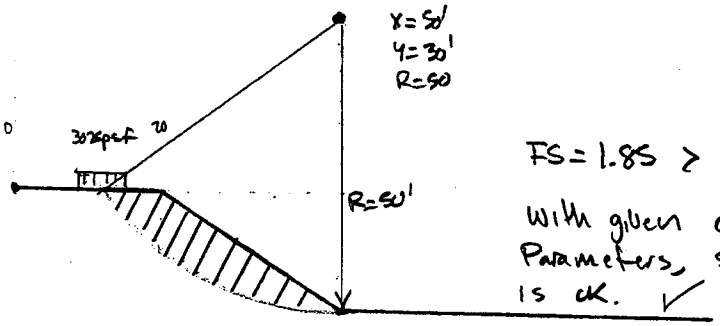

FS = 1.85 > 1.5 ✓ok

With given assumed Parameters, Slope is ok. ✓

- Stabilize slope with Compaction
- Prepare barrels Pad For crane
- Inspect Prior to use.

C-30

File: VTANKS - SLOPE STABILITY
GRID SEARCH ANALYSIS
Approximately 20 slices selected

Xmin=	25.0	Xmax=	65.0	Increment=	5.0
Ymin=	25.0	Ymax=	65.0	Increment=	5.0
Rmin=	35.0	Rmax=	60.0	Increment=	5.0

Minimum FS found during grid pattern = 1.85
Found at X= 50.0, Y= 30.0, R= 50.0

GEOSYSTEM SLOPE STABILITY PROGRAM
SB-SLOPE

PROJECT DATA:
Project: TAN VTANKS
Location:
Filename: VTANKS Description: SLOPE STABILITY

ANALYSIS DATA:

Point No.	Coordinates X	Y	Line No.	Left Point	Right Point	Soil No.
1	0.0	0.0	1	1	2	1
2	20.0	0.0	2	2	3	1
3	51.5	-21.0	3	3	4	1
4	70.0	-21.0				
5	0.0	0.0				
6	0.0	0.0				

Soil No.	Density pcf	Cohesion psf	Phi Deg
1	115.0	400	30.0

Distributed loads

No.	Left X	Right X	Load (lbf/ft)
1	11.0	15.0	3075.0

C-31

X= 50.0 Y= 30.0 R= 50.0

SLICE	X-LEFT	DX	TAN THETA	TAN PHI	COHESION	VERTICAL FORCE	RESISTING TERM	DRIVING TERM
1	10.0	1.0	1.289	0.577	400	74	686	59
2	11.0	2.0	1.171	0.577	400	6716	6873	5106
3	13.0	2.0	1.038	0.577	400	7224	6874	5203
4	15.0	2.5	0.916	0.577	400	1970	2794	1330
5	17.5	2.5	0.801	0.577	400	2587	3094	1618
6	20.0	2.0	0.712	0.577	400	2310	2546	1340
7	22.0	2.0	0.642	0.577	400	2315	2474	1251
8	24.0	2.0	0.578	0.577	400	2289	2394	1145
9	26.0	2.0	0.518	0.577	400	2234	2305	1028
10	28.0	2.0	0.463	0.577	400	2153	2210	905
11	30.0	2.0	0.411	0.577	400	2048	2108	778
12	32.0	2.0	0.362	0.577	400	1919	1999	653
13	34.0	2.0	0.315	0.577	400	1768	1884	530
14	36.0	2.0	0.269	0.577	400	1595	1763	415
15	38.0	2.0	0.226	0.577	400	1402	1635	309
16	40.0	2.0	0.183	0.577	400	1190	1500	214
17	42.0	2.0	0.141	0.577	400	958	1359	134
18	44.0	2.0	0.101	0.577	400	707	1209	71
19	46.0	2.0	0.060	0.577	400	437	1052	26
20	48.0	2.0	0.020	0.577	400	149	885	3

Press a key to continue

V TANKS 4 of 1 P. BRAGASSA

EDF 4672

Tank Rigging: (V-1, 2, 3)

wt = 8100 lbs (empty)

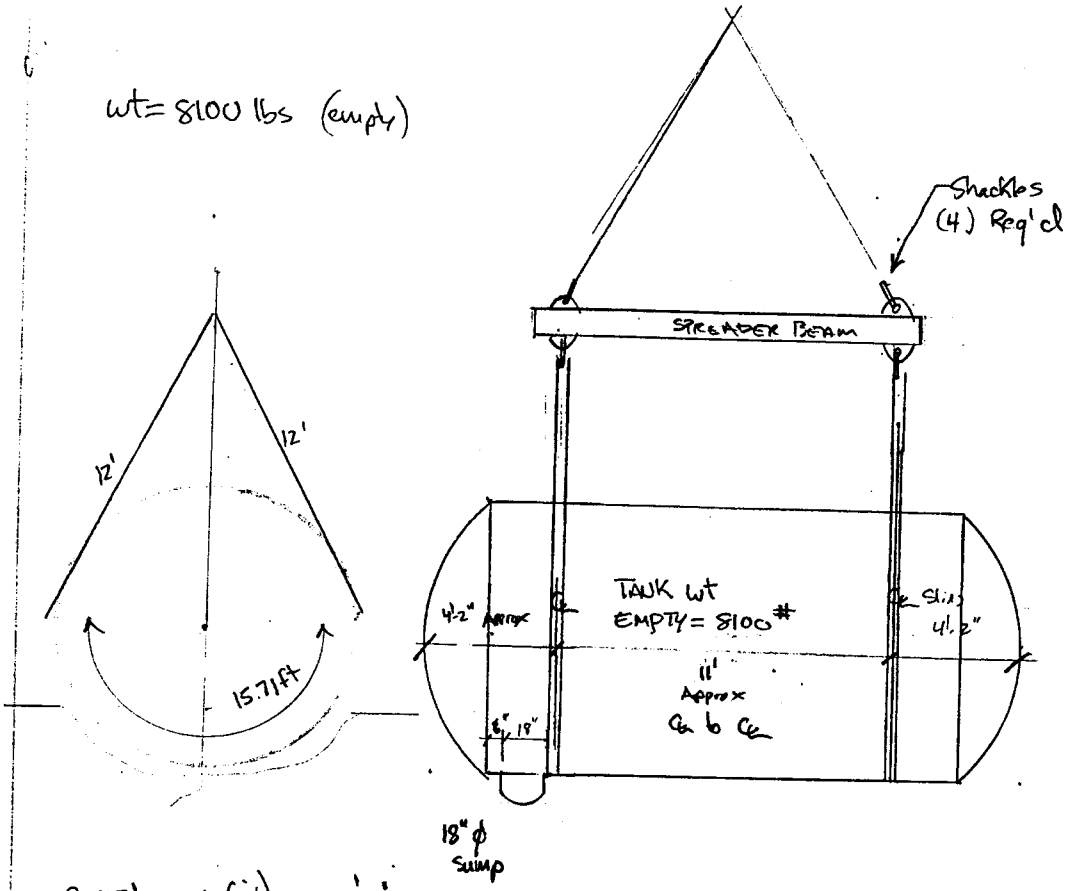

$C = \pi d = \pi (10') = 31.14'$ ft

$\frac{1}{2}C = 15.71$ ft + 12' + 12' = 39.7 ≈ 40' slings

Tank wt = 8100# ≈ Round to 12,000# / 2 slings = 6000#/sling

Basket slings: 60° basket Select 2" 1-ply Lift-it EN1-602

Cap = 8310# (total for 2 slings = 16,620#)

V-TANKS 3/04 P. BRACASSA C

EDF-4672

V-TANKS RIGGING:

V-1, 2, 3 wt = 8100# Empty

V-9 wt = 1100# Empty

DESIGN SPREADER FOR 20 K total Weight (Including Beam wt)
(2x Load) FOR Load variance

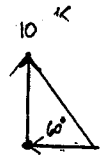

$n = \frac{10}{\sin 60} = 11.55^K \approx 12$ Slingtension

$F_x = \frac{10}{\tan 60} = 5.77^K$ Comp.
$\approx 6^K$

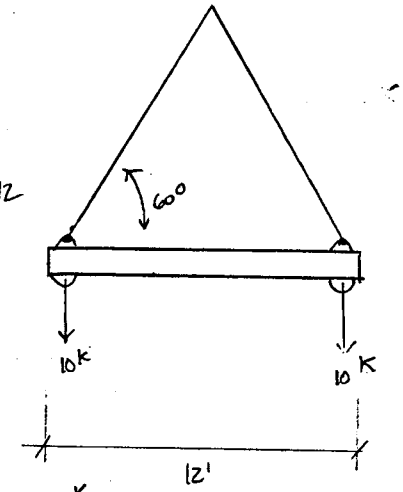

Bending in Beam Results
From Eccentricity:

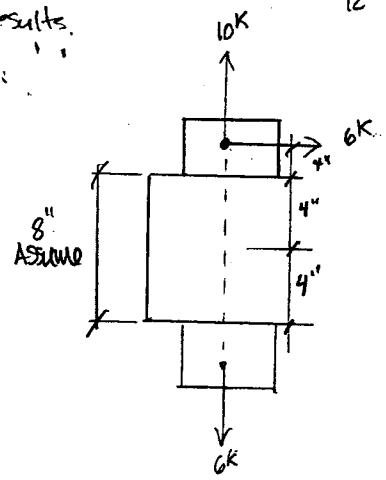

$M = (6)(8)$
$M_y = 48$ K-in
(Weak axis Bending)

Self Weight
assume 30 plf

$M = 30 \frac{(12)^2}{8} = 540$ #-ft
$M_z = 6.48$ K-in

V-TANKS 4/04 P. BRAGASSA

EDF-4672

SPREADER BEAM:

Try Steel tube with material thickness at least 5/16 for welding convenience. 8" depth, 6" width

8x6x5/16 $S_x = 18.1$, $S_y = 15.5$, $A = 8.11$

$f_{bz} = \frac{6.48^{k\text{-}in}}{18.1} = .358$ ksi

$r_y = 2.39$, $r_x = 2.99$

wt = 27.59

$f_{by} = \frac{.48^{k\text{-}in}}{15.5} = 3.1$ ksi

$F_{bz} = .66F_y = .66(46) = 30.36$ (F3-1)

$d = 8$
$w = 6(6) = 36 > 8$ ✓ok

$F_{by} = 30.36$

$\frac{Kl}{r} = \frac{(2)(12\times12)}{2.39} = 120.50$

$C_c = \sqrt{\frac{2\pi^2 E}{F_y}} = \sqrt{\frac{2(\pi)^2 29{,}000}{46}}$

$C_c = 111.55 < \frac{Kl}{r}$

Use (E2-2) $F_a = \frac{12\pi^2 E}{23(Kl/r)^2}$ $\frac{12(\pi)^2 29{,}000}{23(120.5)^2} = 10.28$ ksi

$f_a = \frac{P}{a} = \frac{6}{8.11} = .74$ ksi

$\frac{f_a}{F_a} = \frac{.74}{10.28} = 0.072$

$$\frac{f_a}{F_a} + \frac{C_{mx} f_{bx}}{\left(1-\frac{f_a}{F'_{ex}}\right)F_{bx}} + \frac{C_{my} f_{by}}{\left(1-\frac{f_a}{F'_{ey}}\right)F_{by}} \leq 1.0 \quad \text{(H1-1)}$$

$F'_{ex} = \frac{12\pi^2 E}{23(Kl_b/r_b)^2} = \frac{12\pi^2 29{,}000}{23\left(\frac{2(144)}{2.99}\right)^2} = 16.1$

$.072 + \frac{.358}{\left(1-\frac{.74}{16.1}\right)30.36} + \frac{2.06}{\left(1-\frac{.74}{10.28}\right)30.36}$

$F'_{ey} = \frac{12\pi^2 29{,}000}{23\left(\frac{2(144)}{2.39}\right)^2} = 10.28$

Ratio = .157 < 1 ✓ok

V TANKS 3/04 P. BRACK

Spreader Beam

EDF-4672

(H1-2) $$\frac{f_a}{0.60 F_y} + \frac{f_{bx}}{F_{bx}} + \frac{f_{by}}{F_{by}} \le 1.0$$

$$\frac{.74}{.6(46)} + \frac{.355}{30.36} + \frac{3.1}{30.36} = .19 < 1 \quad \checkmark OK$$

USE 8X6X5/16 ST. (FROM ORIGINAL 50K design)

Lift Plate

Try 3/4" A-36 plate

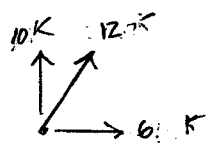

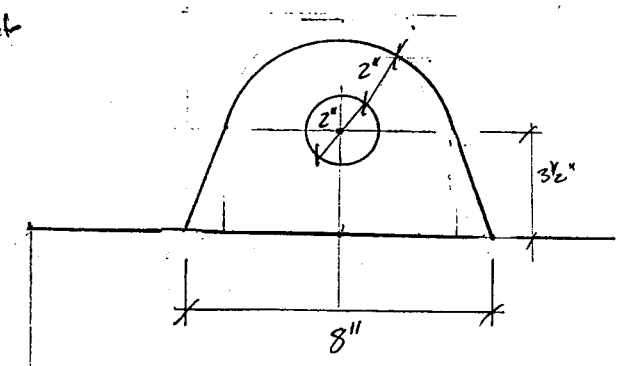

P=

PLATE Shear:

(J4-1) $F_v = 0.30 F_y = .3(58) = 17.4 KSI$

For 3/4" thick x 2" = $1.5 in^2$ = 17.4(1.5) = 26.1 Kips ✓OK

Tension: (J4-2) $F_u = .5 A_t F_y = (.5)(58)(6-2)(.75) = 87$ Kips

Block Shear = $\frac{6}{26.1} + \frac{10}{87} = 0.34 < 1$ ✓OK

V TANKS 3/04 P. [illegible]

SPREADER BEAM. EDF-4672

MIN Weld: (Table J2.4)
3/4 Plate 1/4"

Try 1/4" fillet

$P = .707(D).3(1/4)$ (shear)
$= 3.71$ K/in

Tension on weld
Allow stress table J2.5

For tension same as base metal

J4-2 $.5F_y = .5(58) = 29$ ksi
use shear allowable
$P = 3.71$ K/in

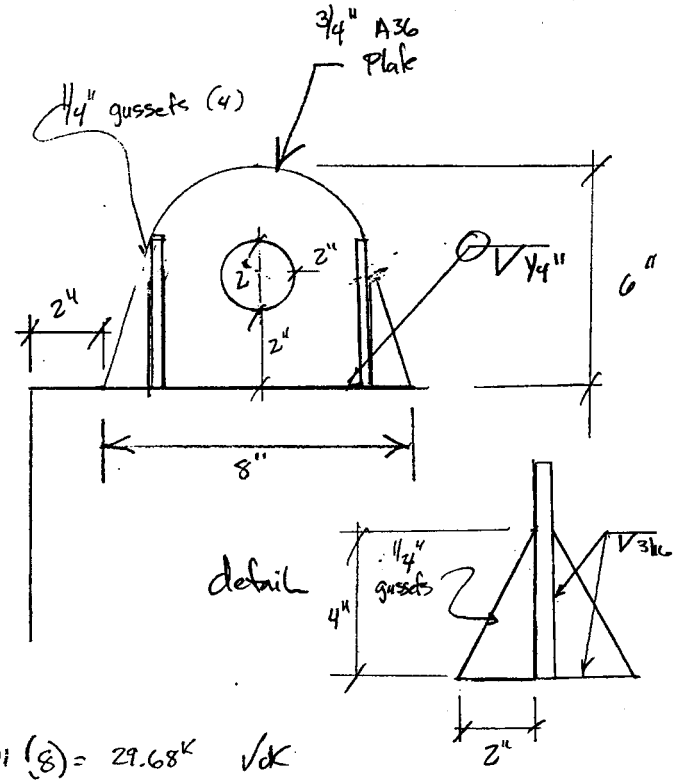

For 8" plate $P = 3.71(8) = 29.68^K$ ✓ok

Weld all around for durability.

USE for top & bottom.

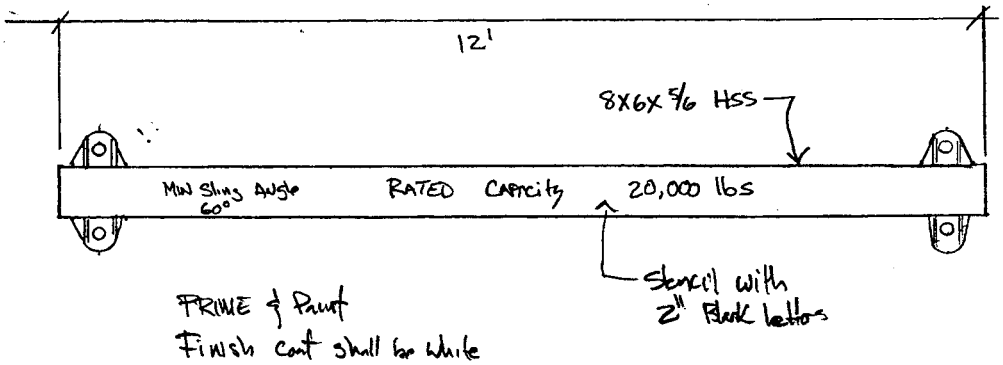

PRIME & Paint
Finish Coat shall be white

V-TANK Spreader Beam (1 Req'd)

V TANKS 3/04 P. BRAGASSA

EDF-4672

Riggings

Shackles: Tensile Force = 12,000 #

Select- CROSBY screw pin (or bolt) G-209 / S-209

USE 1 1/8" 9.5 ton shackle
For Fitup size

4.25" depth will allow clearance for slings
width = 2.91"
> 2" web slings
etc.

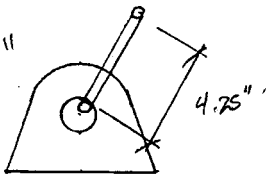

SCREW PIN ANCHOR SHACKLES

G-209 S-209

Screw pin anchor shackles meet the performance requirements of Federal Specification RR-C-271D Type IVA, Grade A, Class 2, except for those provisions required of the contractor.

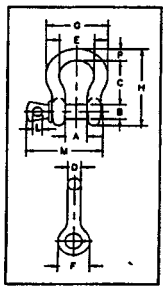

G-209 S-209

Nominal Size (in.)	Working Load Limit* (t)	Stock No. G-209	Stock No. S-209	Weight Each (lbs.)	Dimensions (in.) A	B	C	D	E	F	G	H	L	M	P	Tolerances +/- C	A
3/16	1/3	1018357	-	.06	.38	.25	.88	.19	.50	.56	.98	1.47	.16	1.12	.19	.06	.06
1/4	1/2	1018375	1018384	.10	.47	.31	1.13	.25	.78	.61	1.28	1.84	.19	1.38	.25	.06	.06
5/16	3/4	1018393	1018400	.19	.53	.38	1.22	.31	.94	.75	1.47	2.09	.22	1.66	.31	.06	.06
3/8	1	1018419	1018428	.31	.66	.44	1.44	.38	1.03	.91	1.78	2.49	.25	2.03	.38	.13	.06
7/16	1-1/2	1018437	1018446	.38	.75	.50	1.69	.44	1.16	1.06	2.03	2.91	.31	2.38	.44	.13	.06
1/2	2	1018455	1018464	.72	.81	.63	1.88	.50	1.31	1.19	2.31	3.28	.38	2.69	.50	.13	.06
5/8	3-1/4	1018473	1018482	1.37	1.06	.75	2.38	.63	1.69	1.50	2.94	4.19	.44	3.34	.69	.13	.06
3/4	4-3/4	1018491	1018507	2.35	1.25	.88	2.81	.75	2.00	1.81	3.50	4.97	.50	3.97	.81	.25	.06
7/8	6-1/2	1018516	1018525	3.62	1.44	1.00	3.31	.88	2.28	2.09	4.03	5.83	.50	4.50	.97	.25	.06
1	8-1/2	1018534	1018543	5.03	1.69	1.13	3.75	1.00	2.69	2.38	4.69	6.56	.56	5.07	1.06	.25	.06
1-1/8	9-1/2	1018552	1018561	7.41	1.81	1.25	4.25	1.16	2.91	2.69	5.16	7.47	.63	5.59	1.25	.25	.06
1-1/4	12	1018570	1018589	9.50	2.03	1.38	4.69	1.28	3.25	3.00	5.75	8.25	.69	6.18	1.38	.25	.06
1-3/8	13-1/2	1018596	1018605	13.53	2.25	1.50	5.25	1.42	3.63	3.31	6.38	9.16	.75	6.84	1.50	.25	.13
1-1/2	17	1018614	1018623	17.20	2.38	1.63	5.75	1.54	3.88	3.63	6.88	10.00	.81	7.35	1.62	.25	.13
1-3/4	25	1018632	1018641	27.78	2.88	2.00	7.00	1.84	5.00	4.19	8.88	12.34	1.00	9.06	2.25	.25	.13
2	35	1018650	1018669	46.00	3.25	2.25	7.75	2.06	5.75	4.81	9.97	13.88	1.22	10.34	2.40	.25	.13
2-1/2	55	1018678	1018687	85.75	4.13	2.75	10.50	2.71	7.25	5.69	12.87	17.84	1.38	13.00	3.13	.25	.25

(4) Reqd.

Top Slings: use 12^K tension.

Use 2" ENI-902 poly-endless slings 90° Basket 12,800# cap.

(2) required.

V-TANKS 3/04 P. BRAGLASSA

V-TANK Rigging PLAN

SEE TABLE
for Required Boom Angle
and capacities.

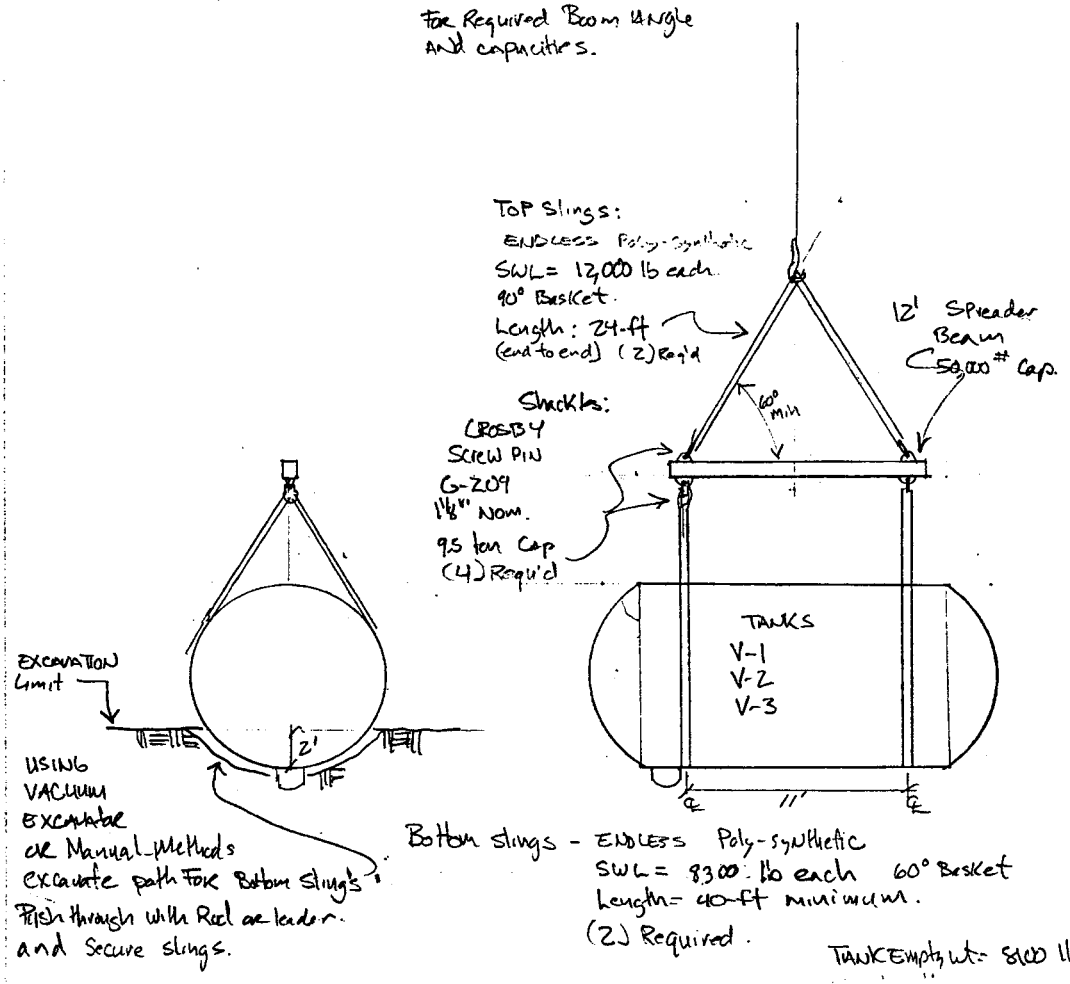

TANK Empty wt= 8100 lb

TANK RIGGING PLAN/Details

NOTES:
1) Tanks shall be lifted from excavation empty
Set on truck/transporter and moved to staging area.
2) Rig and unload at staging area using Rigging
Provided

FLAT ENDLESS SLINGS

EDF-4672

General Information
Slings & Accessories
Nets & Material Handling
Tie Downs
Fall Prevention
Services
Catalog & Contact Us
Newsletters & Articles
Home

The most versatile sling design as hook and load contact points can be rotated. For use in choker, ve basket hitches. Hook contact points can be tapered and reinforced by request.

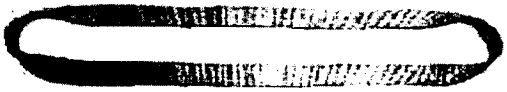

Width (Inches)	Stock No.	Optional End Taper		WORK LOAD LIMITS (LBS.)					Sling W (Lb	
		Width (Inches)	Length (Inches)	Choker	Vertical	Basket Hitches			Base 8 Ft.	
						90 DEG	60 DEG	45 DEG		
1"	EN1-601	-	-	1900	2400	4800	4150	3390	.56	
1"	EN1-901	-	-	2500	3200	6400	5540	4520	.95	
1"	EN2-601	-	-	3800	4800	9600	8310	6780	1.15	
1"	EN2-901	-	-	5000	6400	12800	11080	9050	1.96	
1"	EN3-901	-	-	7600	9600	19200	16620	13570	2.97	
1"	EN4-901	-	-	10000	12500	25000	21650	17670	3.97	
1-1/2"	EN1-915	-	-	3700	4650	9300	8050	6570	1.58	
1-1/2"	EN2-915	-	-	7400	9300	18600	16100	13150	3.26	
1-1/2"	EN3-915	-	-	11000	13950	27900	24160	19720	4.93	
2"	EN1-602	1	12	3800	4800	9600	8310	6780	1.36	
2"	EN1-902	1	12	5000	6400	12800	11080	9050	1.90	
2"	EN2-602	1	12	7600	9600	19200	16620	13570	2.80	
2"	EN2-902	1	12	10000	12500	25000	21650	17670	3.92	
2"	EN3-902	-	-	14000	17500	35000	30310	24740	5.94	
2"	EN4-902	-	-	18000	23500	47000	40700	33230	7.95	
3"	EN1-603	1-1/2	12	5700	7200	14400	12470	10180	2.38	
3"	EN1-903	1-1/2	12	7600	9600	19200	16620	13570	2.99	
3"	EN2-603	1-1/2	12	10000	12500	25000	21650	17670	4.90	
3"	EN2-903	1-1/2	12	14000	17500	35000	30310	24740	6.16	
3"	EN3-903	-	-	21000	26500	53000	45890	37470	9.33	
3"	EN4-903	-	-	28000	35000	70000	60620	49490	12.50	
4"	EN1-604	1-1/2	12	7600	9600	19200	16620	13570	2.92	
4"	EN1-904	1-1/2	12	10000	12500	25000	21650	17670	3.74	
4"	EN2-604	2	18	14000	17500	35000	30310	24740	6.02	
4"	EN2-904	2	18	18000	23500	47000	40700	33230	7.70	
4"	EN3-904	-	-	28000	35000	70000	60620	49490	11.66	
4"	EN4-904	-	-	36000	46000	92000	79670	65040	15.62	

V Tanks	4/04	P. Bragassa	C-2

EDF-4672

TANK RIGGING:

V-9 TANK wt = 1100# calculated based on 1/4" steel

assume 2000# for unknowns

1/4" flange Plate:

shear strength: A = .25" (1")

Plate shear: $F_v = (30ksi).4 = 12ksi$

allowable shear / in = 12ksi (.25) = 3K/in ✓ok.

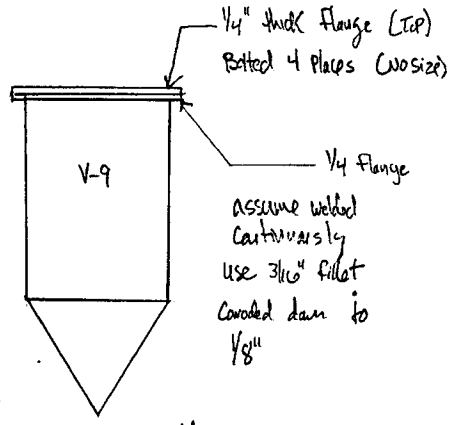

Choke around Top flange.

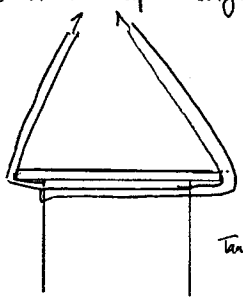

use two chokers
PER TAN HER SME

Tank in tension ✓ok

Weld cap. E316L Electrode (70ksi)

$(.707)(.3)(70)(1/8) = 1.860K/in$

AWS. 2.2.2.3 Fillet weld (.3 F_u)
Allowable stress: Tension ⊥ eff. area
$= .3(F_u)$ ✓

$C = \pi d = \pi(42")$
$= \frac{132"}{12} = 11\text{-ft}$

For 2000# lift: Length of weld required:
using 1/8" fillet = 1860#/in only
1 1/2" of weld will provide strength required. ✓ok

26' end to end slings requested by SME

26 − 11 = 15 ft

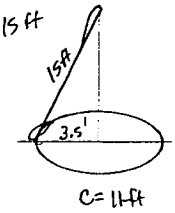

$\cos\theta = \frac{3.5}{15}$

$\theta = 76.5°$ angle of choke

Reduction = .74

For 2000# Load $P = \frac{2000}{.74} = 2702\#$

Size each sling for 100% of load.

min sling cap = 2700#

V-TANKS 3/04 P. BRAGASA C

EDF-4672

TANK CRIBBING DESIGN

V-TANK

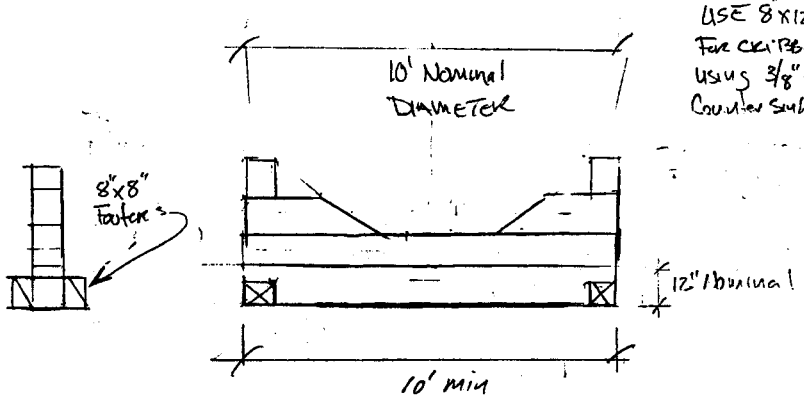

USE 8"x12" Railroad ties For CRIBBING. Bolt together using 3/8" ϕ All-thread. Counter sunk nuts

TYP TANK CRIBBING

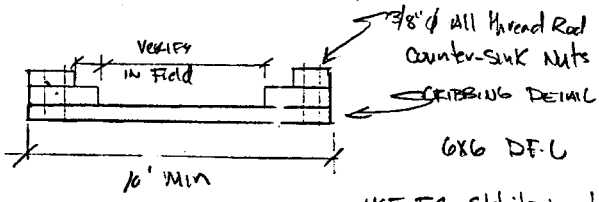

CRIBBING DETAIL

USE FOR Stabilizing tanks on truck while moving to staging AREA
USE SAME CRIBBING DESIGN FOR Staging area.

Appendix D

Selected Design Drawings

This page intentionally left blank.

REVISIONS		
REV	DESCRIPTION	EFFECTIVE DATE:
1	SEE DAR-113786	7/20/04

DRAWING INDEX

PAGE NO.	DWG NO.	A-E SHT NO.	REV	DRAWING TITLE
1	628442	T-1		TAN AREA AND INEEL SITE MAPS
2	628443	T-2	1	DRAWING INDEX
3	628444	C-1		SITE PLAN AND DETAIL
4	628445	C-2		SITE PLAN
5	628446	C-3		PUMP ACCESS EXCAVATION PLAN – PHASE ONE
6	628447	C-4		TANK AND SOIL REMEDIATION EXCAVATION PLAN – PHASE TWO AND THREE
7	628448	C-5		SOIL REMEDIATION EXCAVATION PLAN SITES 1 AND 2
8	628449	C-6		SOIL REMEDIATION EXCAVATION PLAN – PHASE THREE
9	628450	C-7		SECTIONS AND DETAIL
10	628451	C-8		SECTIONS AND DETAILS
11	628452	C-9		SOIL STAGING AREA PLAN
12	628453	C-10		FINAL GRADING PLAN
13	628454	C-11		EXISTING GRADE PLAN
14	628455	C-12		FINISHED GRADE PLAN
15	628456	C-13		SECTIONS AND DETAILS
16	628457	C-14		TANK REMOVAL OPTION 1, TANK RIGGING PLAN – EXCAVATION TO STAGING AREA
17	628458	C-15		TANK REMOVAL OPTION 1, TANK RIGGING PLAN – STAGING AREA TO TRANSPORTER
18	628459	C-16		TANK REMOVAL OPTION 2, TANK RIGGING PLAN – EXCAVATION TO TRANSPORTER
19	628460	C-17		TANK RIGGING PLAN – OFF-LOAD TANKS AT ICDF
20	628461	C-18		RIGGING DETAILS AND SECTIONS
21	628462	S-1		ISOMETRIC VIEWS
22	628463	S-2		TANK SUPPORT SKID AND CONTAINMENT PAN PLAN AND VIEWS
23	628464	S-3		TANK SUPPORT SKID PLAN, SECTION, AND VIEW
24	628465	S-4		CONTAINMENT PAN PLANS, SECTION, AND DETAILS
25	628466	S-5		STEEL SHIELDING PLAN, VIEWS, SECTION, AND DETAIL
26	628467	P-1		P&ID
27	628468	P-2		P&ID
28	628469	P-3		SITE PLAN
29	628470	P-4		ENLARGED PIPING PLAN A, DETAILS AND SECTION
30	628471	P-5		DETAIL AND SECTION
31	628472	P-6		TANK DRAINAGE STEPS
32	628473	P-7		TANK DRAINAGE STEPS
33	628474	P-8		ENLARGED PIPING PLAN B AND PIPE SUPPORTS
34	628475	P-9		SECTION
35	628476	P-10		RECEIVING TANK PLAN, ELEVATION, DETAIL AND SECTIONS
36	628477	HV-1		HVAC SPRUNG STRUCTURE PLAN
37	628478	E-1		ONE LINE DIAGRAM
38	628479	E-2		OVERALL PLAN VIEW
39	628480	E-3		ENLARGED ELECTRICAL PLAN
40	628481	E-4		POWER POLE PHOTOS – DEMOLITION
41	628482	E-5		POWER LINE DETAILS – INSTALL
42	628483	E-6		TRANSFORMER DETAIL
43	628484	E-7		PUMP CONTROL PANEL DETAIL
44	628485	E-8		PUMP CONTROL PANEL SCHEMATIC DIAGRAM
45	628486	E-9		MIXER MOTOR PANEL DETAIL
46	628487	E-10		RECIRCULATION PUMP MOTOR PANEL DETAIL
47	628488	E-11		RECIRCULATION PUMP & MIXER MOTOR PANEL SCHEMATIC DIAGRAMS
48	628489	E-12		TANK LEVEL MONITORING PANEL SUPPORT FRAME DETAIL
49	628490	E-13		TANK LEVEL MONITORING PANEL & JUNCTION BOX DETAILS AND SECTIONS
50	628491	E-14		TANK LEVEL MONITORING WIRING DIAGRAM
51	628492	E-15		HIGH-HIGH LEVEL SECONDARY SHUTDOWN PANEL SUPPORT FRAME, WIRING DIAGRAM AND DETAIL
52	628493	E-16		VFD PANEL DETAIL
53	628494	E-17		VFD WIRING DIAGRAM AND PUMP LEVEL CONTROL LADDER DIAGRAM

LEGEND

ADDITIONAL INFORMATION

FOR DRAWING INDEX SEE DRAWING NO. 628443	SUBCONTRACT NO. N/A	INEEL
NO SCALE	REQUESTER: G. Mc DANNEL DESIGN: P.M. BRADASSA DRAWN: [illegible] PROJECT NO. 22801 SPEC. CODE	TAN TSF-09/18 V-TANKS REMEDIATION DRAWING INDEX
DESIGN PHASE: AFC SAFETY CATEGORY: CC	FOR REVIEW/APPROVAL SIGNATURES SEE DAR NO. 113857 EFFECTIVE DATE: 7/15/04	SIZE D · CAGE CODE 01MF3 · AREA 034 · SYS 9999 · BLDG 01 · SEQ 090 · DWG-628443 · REV 1 SCALE: NONE · SHEET T-2

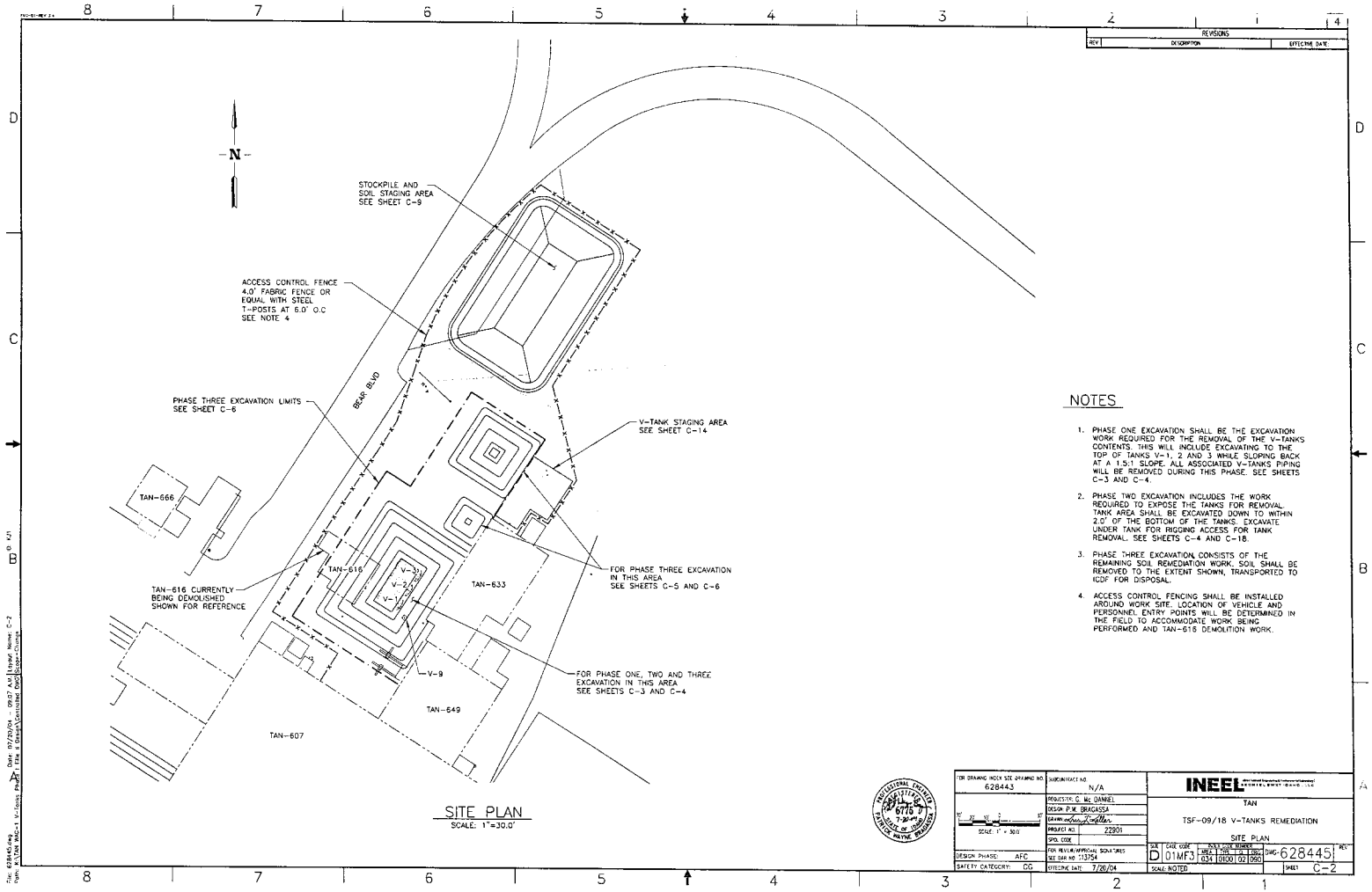
N
STOCKPILE AND SOIL STAGING AREA SEE SHEET C-9
ACCESS CONTROL FENCE 4.0' FABRIC FENCE OR EQUAL WITH STEEL T-POSTS AT 6.0' O.C SEE NOTE 4
BEAR BLVD
PHASE THREE EXCAVATION LIMITS SEE SHEET C-6
V-TANK STAGING AREA SEE SHEET C-14
TAN-666
TAN-616
TAN-633
TAN-616 CURRENTLY BEING DEMOLISHED SHOWN FOR REFERENCE
FOR PHASE THREE EXCAVATION IN THIS AREA SEE SHEETS C-5 AND C-6
V-9
FOR PHASE ONE, TWO AND THREE EXCAVATION IN THIS AREA SEE SHEETS C-3 AND C-4
TAN-649
TAN-607
SITE PLAN
SCALE: 1"=30.0'
NOTES
1. PHASE ONE EXCAVATION SHALL BE THE EXCAVATION WORK REQUIRED FOR THE REMOVAL OF THE V-TANKS CONTENTS. THIS WILL INCLUDE EXCAVATING TO THE TOP OF TANKS V-1, 2 AND 3 WHILE SLOPING BACK AT A 1.5:1 SLOPE. ALL ASSOCIATED V-TANKS PIPING WILL BE REMOVED DURING THIS PHASE. SEE SHEETS C-3 AND C-4.
2. PHASE TWO EXCAVATION INCLUDES THE WORK REQUIRED TO EXPOSE THE TANKS FOR REMOVAL. TANK AREA SHALL BE EXCAVATED DOWN TO WITHIN 2.0' OF THE BOTTOM OF THE TANKS. EXCAVATE UNDER TANK FOR RIGGING ACCESS FOR TANK REMOVAL. SEE SHEETS C-4 AND C-18.
3. PHASE THREE EXCAVATION CONSISTS OF THE REMAINING SOIL REMEDIATION WORK. SOIL SHALL BE REMOVED TO THE EXTENT SHOWN, TRANSPORTED TO ICDF FOR DISPOSAL.
4. ACCESS CONTROL FENCING SHALL BE INSTALLED AROUND WORK SITE. LOCATION OF VEHICLE AND PERSONNEL ENTRY POINTS WILL BE DETERMINED IN THE FIELD TO ACCOMMODATE WORK BEING PERFORMED AND TAN-616 DEMOLITION WORK.
REVISIONS
REV
DESCRIPTION
EFFECTIVE DATE
FOR DRAWING INDEX SEE DRAWING NO. 628443
SUBCONTRACT NO. N/A
REQUESTOR: G. Mc DANNEL
DESIGN: P.M. BRAGASSA
PROJECT NO. 22801
SPEC. CODE
FOR REVIEW/APPROVAL SIGNATURES SEE DWG NO. 713754
EFFECTIVE DATE 7/20/04
DESIGN PHASE: AFC
SAFETY CATEGORY: CG
INEEL
TAN
TSF-09/18 V-TANKS REMEDIATION
SITE PLAN
SYS. CODE D
CAGE CODE 01MF3
SYSTEM NUMBER AREA 031 PBS 01 SYS 00 SEQ 090
DWG-628445
REV
SCALE: NOTED
SHEET C-2

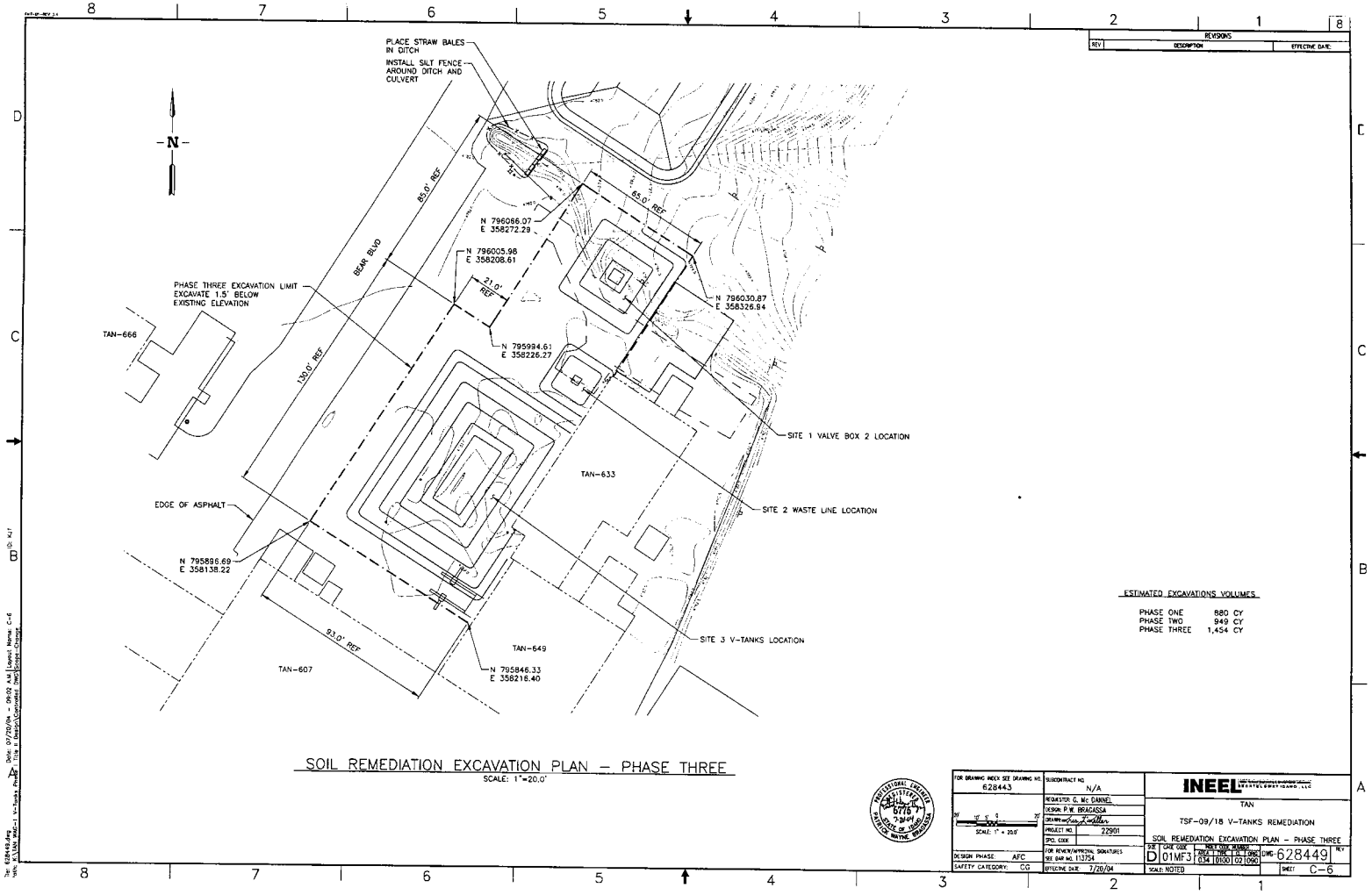

SOIL REMEDIATION EXCAVATION PLAN – PHASE THREE
SCALE: 1"=20.0'

ESTIMATED EXCAVATIONS VOLUMES

PHASE ONE	880 CY
PHASE TWO	949 CY
PHASE THREE	1,454 CY

REVISIONS		
REV	DESCRIPTION	EFFECTIVE DATE

FOR DRAWING INDEX SEE DRAWING NO. 628443

SCALE: 1" = 20.0'

DESIGN PHASE: AFC
SAFETY CATEGORY: CG

SUBCONTRACT NO. N/A
REQUESTER: G. Mc DANNEL
DESIGN: P.W. BRACASSA
DRAWN: [illegible]
PROJECT NO. 22901
SPC. CODE
FOR REVIEW/APPROVAL SIGNATURES
SEE DAP NO. 113754
EFFECTIVE DATE: 7/20/04

INEEL BECHTEL BWXT IDAHO, LLC

TAN
TSF-09/18 V-TANKS REMEDIATION
SOIL REMEDIATION EXCAVATION PLAN – PHASE THREE

SYS: D | CAGE CODE: 01MF3 | PROJ CODE (BUDGET): PROJ 034 | TYPE 0100 | SUB 02 | ORG 0090 | DWG: 628449 | REV
SCALE: NOTED | SHEET: C-6

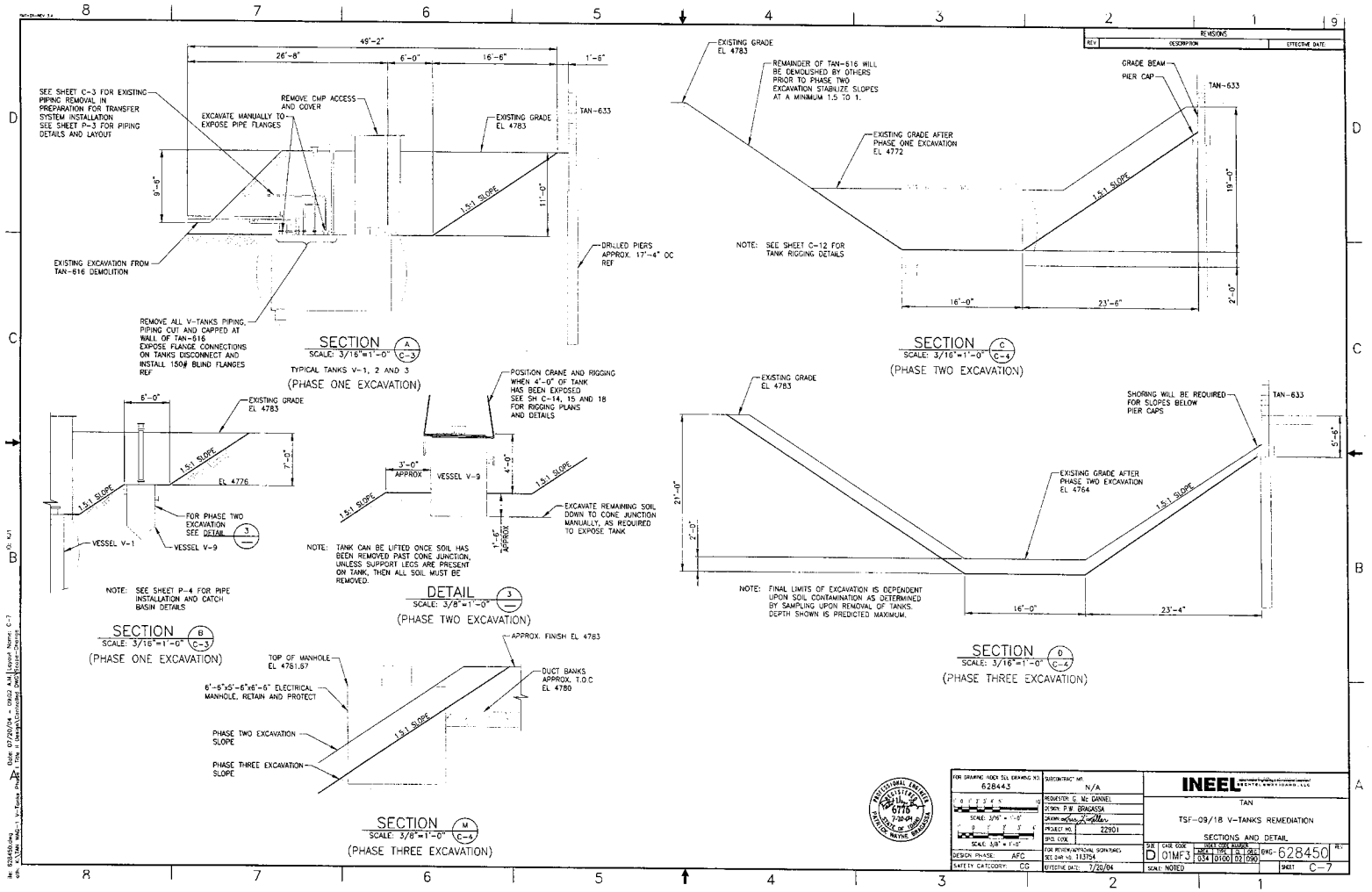
SEE SHEET C-3 FOR EXISTING PIPING REMOVAL IN PREPARATION FOR TRANSFER SYSTEM INSTALLATION SEE SHEET P-3 FOR PIPING DETAILS AND LAYOUT
REMOVE CMP ACCESS AND COVER
EXCAVATE MANUALLY TO EXPOSE PIPE FLANGES
EXISTING GRADE EL 4783
TAN-633
EXISTING EXCAVATION FROM TAN-616 DEMOLITION
REMOVE ALL V-TANKS PIPING, PIPING CUT AND CAPPED AT WALL OF TAN-616 EXPOSE FLANGE CONNECTIONS ON TANKS DISCONNECT AND INSTALL 150# BLIND FLANGES REF
DRILLED PIERS APPROX. 17'-4" OC REF
SECTION A C-3
SCALE: 3/16"=1'-0"
TYPICAL TANKS V-1, 2 AND 3
(PHASE ONE EXCAVATION)
REMAINDER OF TAN-616 WILL BE DEMOLISHED BY OTHERS PRIOR TO PHASE TWO EXCAVATION STABILIZE SLOPES AT A MINIMUM 1.5 TO 1.
EXISTING GRADE AFTER PHASE ONE EXCAVATION EL 4772
GRADE BEAM
PIER CAP
NOTE: SEE SHEET C-12 FOR TANK RIGGING DETAILS
SECTION C C-4
SCALE: 3/16"=1'-0"
(PHASE TWO EXCAVATION)
EXISTING GRADE EL 4783
EL 4776
FOR PHASE TWO EXCAVATION SEE DETAIL 3
VESSEL V-1
VESSEL V-9
NOTE: SEE SHEET P-4 FOR PIPE INSTALLATION AND CATCH BASIN DETAILS
SECTION B C-3
SCALE: 3/16"=1'-0"
(PHASE ONE EXCAVATION)
POSITION CRANE AND RIGGING WHEN 4'-0" OF TANK HAS BEEN EXPOSED SEE SH C-14, 15 AND 18 FOR RIGGING PLANS AND DETAILS
VESSEL V-9
EXCAVATE REMAINING SOIL DOWN TO CONE JUNCTION MANUALLY, AS REQUIRED TO EXPOSE TANK
NOTE: TANK CAN BE LIFTED ONCE SOIL HAS BEEN REMOVED PAST CONE JUNCTION, UNLESS SUPPORT LEGS ARE PRESENT ON TANK, THEN ALL SOIL MUST BE REMOVED.
DETAIL 3
SCALE: 3/8"=1'-0"
(PHASE TWO EXCAVATION)
SHORING WILL BE REQUIRED FOR SLOPES BELOW PIER CAPS
EXISTING GRADE AFTER PHASE TWO EXCAVATION EL 4764
NOTE: FINAL LIMITS OF EXCAVATION IS DEPENDENT UPON SOIL CONTAMINATION AS DETERMINED BY SAMPLING UPON REMOVAL OF TANKS. DEPTH SHOWN IS PREDICTED MAXIMUM.
SECTION D C-4
SCALE: 3/16"=1'-0"
(PHASE THREE EXCAVATION)
APPROX. FINISH EL 4783
TOP OF MANHOLE EL 4781.67
6'-6"x5'-6"x6'-6" ELECTRICAL MANHOLE, RETAIN AND PROTECT
DUCT BANKS APPROX. T.O.C EL 4780
PHASE TWO EXCAVATION SLOPE
PHASE THREE EXCAVATION SLOPE
SECTION M C-4
SCALE: 3/8"=1'-0"
(PHASE THREE EXCAVATION)
REVISIONS
INEEL
TAN
TSF-09/18 V-TANKS REMEDIATION
SECTIONS AND DETAIL
DWG-628450
SCALE: NOTED
SHEET C-7
DESIGN PHASE: AFC
SAFETY CATEGORY: CG
EFFECTIVE DATE: 7/20/04

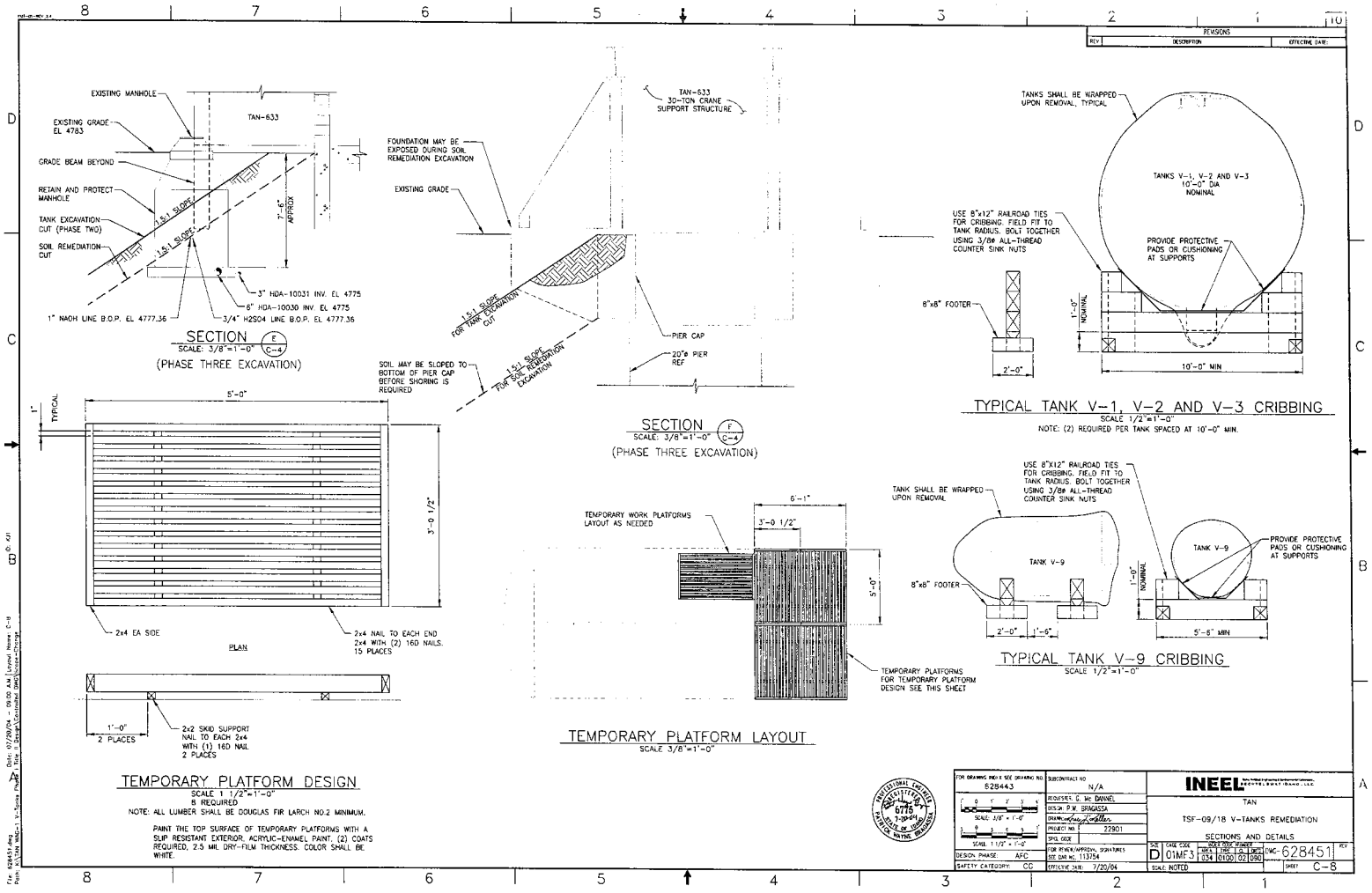
REVISIONS
REV
DESCRIPTION
EFFECTIVE DATE
EXISTING MANHOLE
EXISTING GRADE EL 4783
TAN-633
GRADE BEAM BEYOND
RETAIN AND PROTECT MANHOLE
TANK EXCAVATION CUT (PHASE TWO)
SOIL REMEDIATION CUT
1.5:1 SLOPE
7'-6" APPROX
3" HDA-10031 INV. EL 4775
6" HDA-10030 INV. EL 4775
1" NAOH LINE B.O.P. EL 4777.36
3/4" H2SO4 LINE B.O.P. EL 4777.36
SECTION E C-4
SCALE: 3/8"=1'-0"
(PHASE THREE EXCAVATION)
FOUNDATION MAY BE EXPOSED DURING SOIL REMEDIATION EXCAVATION
EXISTING GRADE
TAN-633 30-TON CRANE SUPPORT STRUCTURE
1.5:1 SLOPE FOR TANK EXCAVATION CUT
1.5:1 SLOPE FOR SOIL REMEDIATION EXCAVATION
SOIL MAY BE SLOPED TO BOTTOM OF PIER CAP BEFORE SHORING IS REQUIRED
PIER CAP
20"ø PIER REF
SECTION F C-4
SCALE: 3/8"=1'-0"
(PHASE THREE EXCAVATION)
TANKS SHALL BE WRAPPED UPON REMOVAL, TYPICAL
TANKS V-1, V-2 AND V-3 10'-0" DIA NOMINAL
USE 8"x12" RAILROAD TIES FOR CRIBBING. FIELD FIT TO TANK RADIUS. BOLT TOGETHER USING 3/8ø ALL-THREAD COUNTER SINK NUTS
PROVIDE PROTECTIVE PADS OR CUSHIONING AT SUPPORTS
8"x8" FOOTER
1'-0" NOMINAL
2'-0"
10'-0" MIN
TYPICAL TANK V-1, V-2 AND V-3 CRIBBING
SCALE 1/2"=1'-0"
NOTE: (2) REQUIRED PER TANK SPACED AT 10'-0" MIN.
1" TYPICAL
5'-0"
3'-0 1/2"
2x4 EA SIDE
2x4 NAIL TO EACH END 2x4 WITH (2) 16D NAILS. 15 PLACES
PLAN
1'-0" 2 PLACES
2x2 SKID SUPPORT NAIL TO EACH 2x4 WITH (1) 16D NAIL 2 PLACES
TEMPORARY PLATFORM DESIGN
SCALE 1 1/2"=1'-0"
8 REQUIRED
NOTE: ALL LUMBER SHALL BE DOUGLAS FIR LARCH NO.2 MINIMUM.
PAINT THE TOP SURFACE OF TEMPORARY PLATFORMS WITH A SLIP RESISTANT EXTERIOR, ACRYLIC-ENAMEL PAINT. (2) COATS REQUIRED, 2.5 MIL DRY-FILM THICKNESS. COLOR SHALL BE WHITE.
TEMPORARY WORK PLATFORMS LAYOUT AS NEEDED
6'-1"
3'-0 1/2"
5'-0"
TEMPORARY PLATFORMS FOR TEMPORARY PLATFORM DESIGN SEE THIS SHEET
TEMPORARY PLATFORM LAYOUT
SCALE 3/8"=1'-0"
USE 8"X12" RAILROAD TIES FOR CRIBBING. FIELD FIT TO TANK RADIUS. BOLT TOGETHER USING 3/8ø ALL-THREAD COUNTER SINK NUTS
TANK SHALL BE WRAPPED UPON REMOVAL
TANK V-9
PROVIDE PROTECTIVE PADS OR CUSHIONING AT SUPPORTS
8"x8" FOOTER
1'-0" NOMINAL
2'-0"
1'-6"
5'-6" MIN
TYPICAL TANK V-9 CRIBBING
SCALE 1/2"=1'-0"
FOR DRAWING INDEX SEE DRAWING NO. 628443
SUBCONTRACT NO N/A
INEEL
TAN
TSF-09/18 V-TANKS REMEDIATION
SECTIONS AND DETAILS
DESIGN PHASE: AFC
SAFETY CATEGORY: CC
EFFECTIVE DATE: 7/20/04
SCALE: NOTED
DWG-628451
SHEET C-8

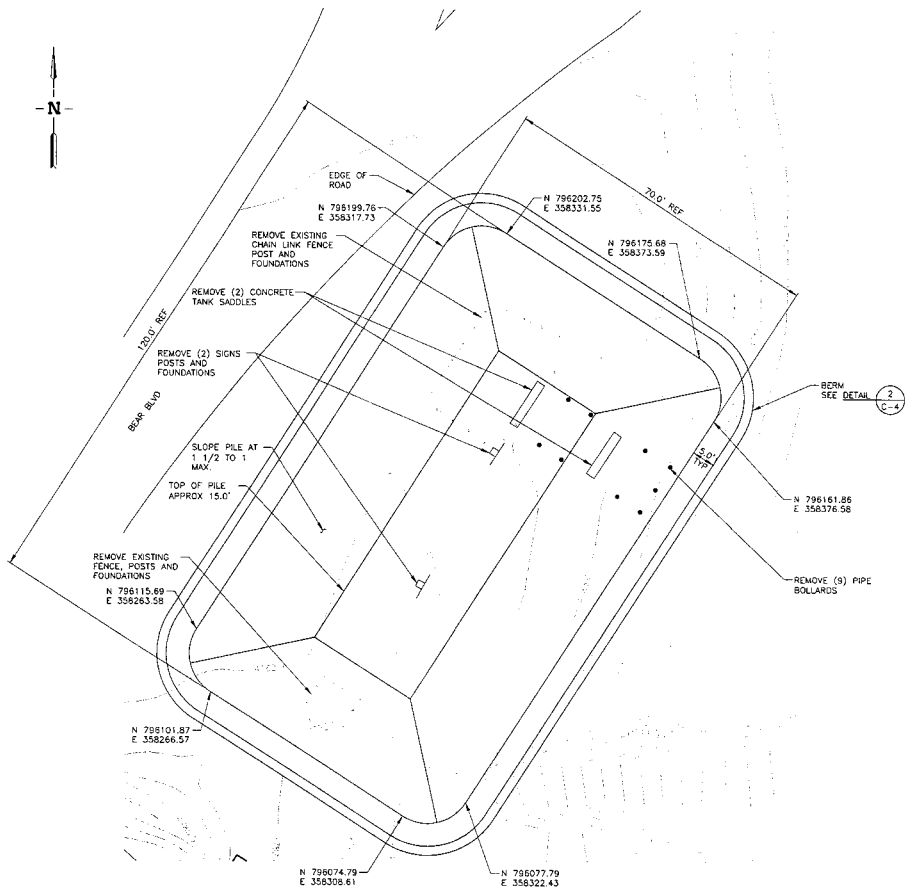

SOIL STAGING AREA PLAN

LEGEND

EXISTING CONTOURS

NOTES

1. THE EXISTING AREA WHERE THE SOIL STAGING WILL BE CONSTRUCTED SHALL BE STRIPPED AND CLEARED OF ALL BRUSH, WEEDS, RUBBISH AND ORGANIC MATTER. ALL VEGETATION, ROOTS, BRUSH AND DEBRIS ENCOUNTERED SHALL BE REMOVED TO A DEPTH OF 4" BELOW SUBGRADE MINIMUM.
2. AREA SHALL BE PREPPED BY ADDING 3" MINIMUM 3/4" CRUSHED GRAVEL.
3. HDPE COVER SYSTEM SHALL BE 30MIL MINIMUM THICKNESS WITH THE FOLLOWING MINIMUM PROPERTIES:
   - YIELD STRENGTH: 63 LB/IN ASTM D 638
   - BREAK STRENGTH: 114 LB/IN ASTM D 638
   - YIELD ELONGATION: 12%
   - TEAR RESISTANCE: 21 LB ASTM D 1004
   - PUNCTURE RESISTANCE: 54 LB ASTM D 4833
4. INSTALL COVER IN ACCORDANCE WITH MANUFACTURES WRITTEN INSTRUCTIONS. SEAMS SHALL BE PREFABRICATED BY THE FACTORY TO THE EXTENT POSSIBLE. FIELD SEAMS SHALL COMPLY WITH THE MANUFACTURERS INSTRUCTIONS. SAND BAGS ARE TO BE PLACED AROUND BASE OF PILE CONTINUOUSLY AND ALONG TOP EDGE OF PILE CONTINUOUSLY. PLACE OTHER SAND BAGS AS NEEDED.

REVISIONS

REV	DESCRIPTION	EFFECTIVE DATE

PROFESSIONAL ENGINEER REGISTERED 6775 7/20/04 STATE OF IDAHO PATRICK WAYNE BRAGASSA

FOR DRAWING INDEX SEE DRAWING NO. 628443	SUBCONTRACT NO. N/A	INEEL
SCALE: 1" = 10'0"	REQUESTER: C. Mc DANIEL	TAN
	DESIGN: P.W. BRAGASSA	TSF-09/18 V-TANKS REMEDIATION
	DRAWN: [signature]	SOIL STAGING AREA PLAN
	PROJECT NO. 22901	
	SPEC. CODE	
DESIGN PHASE: AFC	FOR REVIEW/APPROVAL SIGNATURES SEE DAR NO. 113754	SIZE D · CAGE CODE 01MF3 · SCALE 1"=10'0" · DWG-628452 · REV
SAFETY CATEGORY: CG	EFFECTIVE DATE: 7/20/04	SHEET C-9

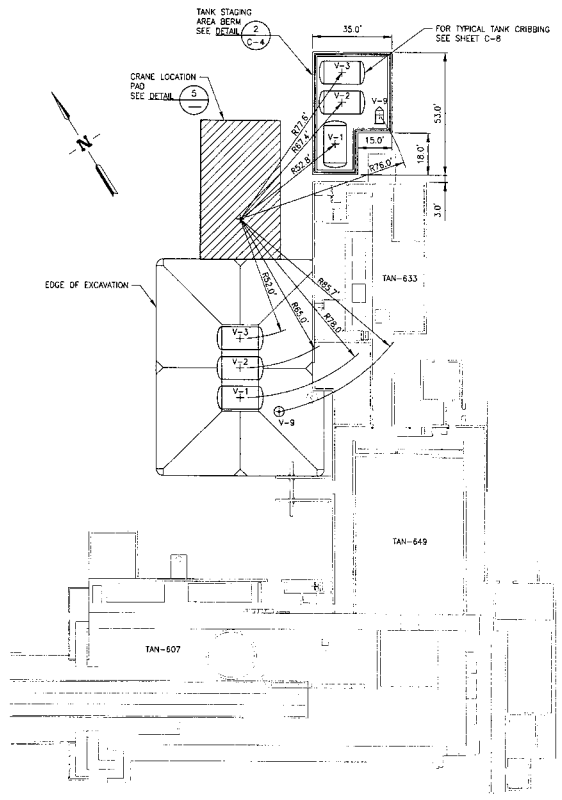

TANK REMOVAL OPTION 1
TANK RIGGING PLAN – EXCAVATION TO STAGING AREA
SCALE: 1"=20.0'

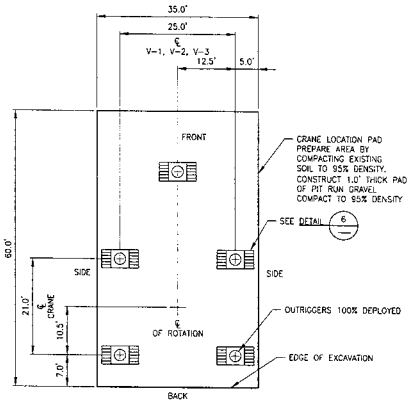

DETAIL 5
SCALE: 1"=10.0'

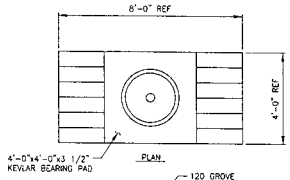

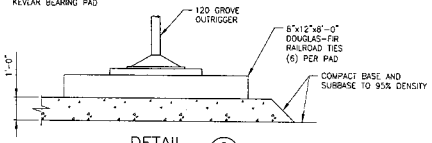

DETAIL 6
SCALE: 1/2"=1'-0"

ESTIMATED CRANE CONFIGURATION AND CAPACITIES TABLE

	TANK	ESTIMATED REACH RADIUS (FT)	BOOM ANGLE	BOOM LENGTH (FT)	CAPACITY (LBS)	GROSS TANK LOAD (LBS)	NET TOTAL LOAD (LBS)
LIFTING TANKS FROM EXCAVATION	V-3	60	63.5°	130	24,450	8100	14,254
	V-2	70	58.5°	130	20,650	8100	14,254
	V-1	80	52.5°	130	17,650	8100	14,254
	V-9	90	46.5°	130	13,900	1100	7,254
MOVING LOAD TO STAGING AREA	SWING	40	73.5°	130 (MAX)	35,950	--	--
SETTING TANKS IN STAGING AREA	V-3	60	52.5°	130	17,650	8100	14,254
	V-2	70	58.5°	130	20,650	8100	14,254
	V-1	80	63.5°	130	24,450	8100	14,254
	V-9	80	52.5°	130	17,650	1100	7254

CRANE LOAD CAPACITY NOTES:

CRANE: GROVE TM 9120
BOOM: 130.0' MAIN BOOM (JIB STOWED)
COUNTER WEIGHTS: 30,000 LBS
OUTRIGGERS: 100% DEPLOYED
LOAD CAPACITIES BASED ON 360° OF ROTATION
LOADS:

130 TON HOOK BLOCK	=	3483 LBS
15 TON HEADACHE BALL	=	803 LBS
WIRE ROPE	=	300 LBS
RIGGING AND MISC.	=	404 LBS
TOTAL ADDED LOADS	=	5000 LBS
RETRACTABLE JIB	=	1154 LBS
TOTAL ADDITIONAL LOADS	=	6154 LBS

NOTES

1. CRANE OPERATOR SHALL VERIFY TABLE CAPACITIES PRIOR TO LIFTS.
2. FIELD CONDITIONS MAY REQUIRE MODIFICATIONS OF VALUES. FINAL APPROVED LIFT PLANS SHALL GOVERN.
3. ALIGN CRANE WITH CENTER LINE OF TANKS V-1, V-2 AND V-3. LIFT TANKS FROM EXCAVATION OFF THE BACK QUADRANT OF THE CRANE AT RADIUS SHOWN.
4. BOOM UP TO 70' MIN FOR MOVING TANKS TO STAGING AREA, AND SET USING RADIUS SHOWN.

REVISIONS

REV.	DESCRIPTION	EFFECTIVE DATE

PROFESSIONAL ENGINEER REGISTERED 6715 STATE OF IDAHO

FOR DRAWING INDEX SEE DRAWING NO. 628443
SCALE: 1" = 20.0'
SCALE: 1" = 10.0'
DESIGN PHASE: AFC
SAFETY CATEGORY: CO

SUBCONTRACT NO. N/A
REGISTER: G. Mc DANNEL
DESIGN: P.W. BRAGASSA
DRAWN: Gus Fuller
PROJECT NO. 22901
SPEC. CODE
FOR REVIEW/APPROVAL SIGNATURES
SEE DAR NO. 113754
EFFECTIVE DATE: 7/20/04

INEEL
TAN
TSF-09/18 V-TANKS REMEDIATION
TANK REMOVAL OPTION 1
TANK RIGGING PLAN – EXCAVATION TO STAGING AREA

SIZE	CALC. CODE	INDEX CODE NUMBER	DWG-	REV
D	01MF3	WCG 1 PROJ 0 SYS 000 034 (0100) 02 090	628457	

SCALE: NOTED
SHEET C-14

File: 628457.dwg
Path: K:\TAN WCG-1 V-Tanks Trench\Title II Design\Controlled DWG\Issue Change
Date: 07/20/04 – 08:57 AM | Layout Name: Rigging Plan
ID: KJI

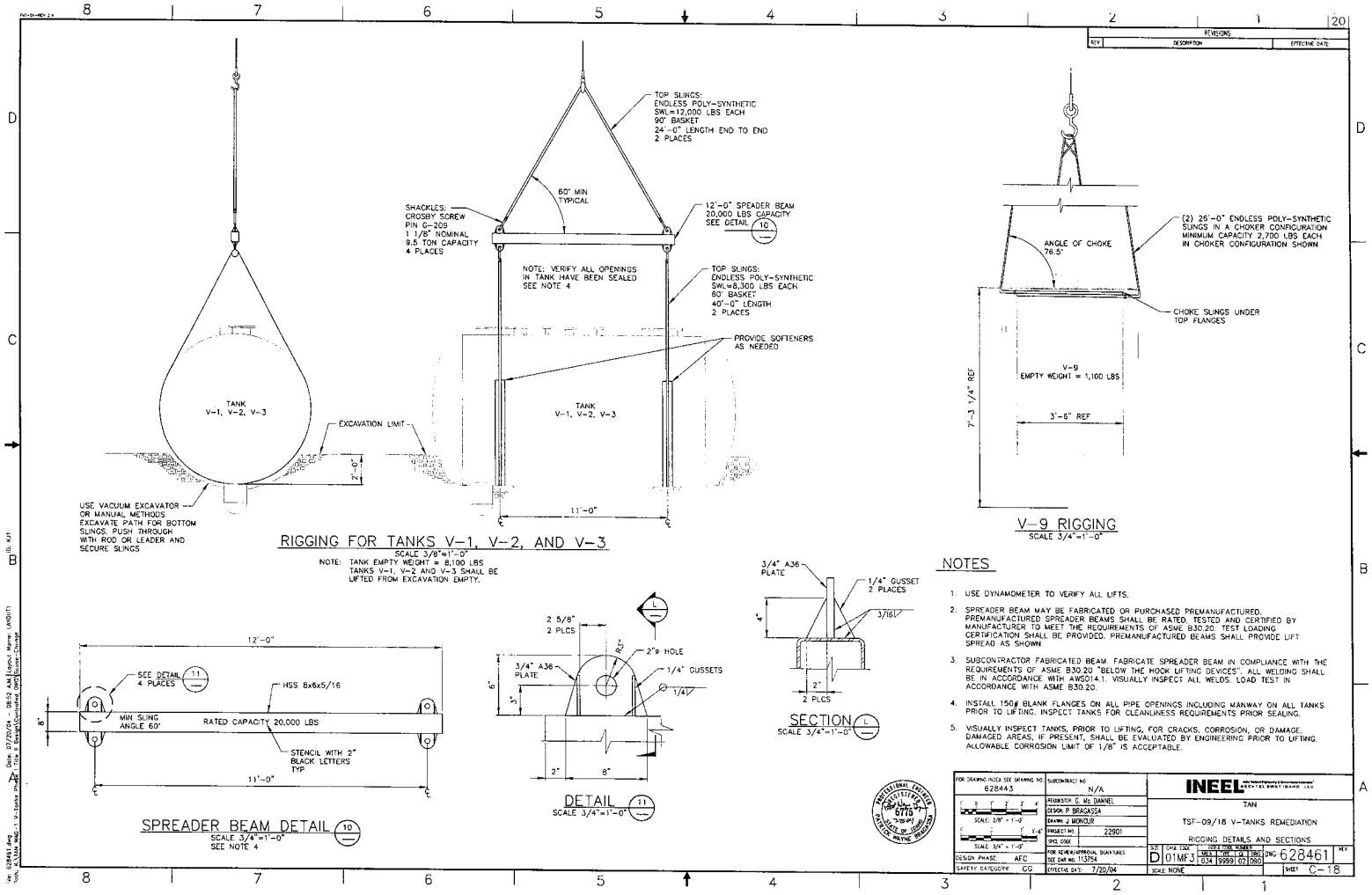
TOP SLINGS:
ENDLESS POLY-SYNTHETIC
SWL=12,000 LBS EACH
90° BASKET
24'-0" LENGTH END TO END
2 PLACES
60° MIN TYPICAL
SHACKLES:
CROSBY SCREW PIN G-209
1 1/8" NOMINAL
9.5 TON CAPACITY
4 PLACES
12'-0" SPREADER BEAM
20,000 LBS CAPACITY
SEE DETAIL 10
NOTE: VERIFY ALL OPENINGS IN TANK HAVE BEEN SEALED SEE NOTE 4
TOP SLINGS:
ENDLESS POLY-SYNTHETIC
SWL=8,300 LBS EACH
60° BASKET
40'-0" LENGTH
2 PLACES
PROVIDE SOFTENERS AS NEEDED
TANK
V-1, V-2, V-3
EXCAVATION LIMIT
2'-0"
11'-0"
USE VACUUM EXCAVATOR OR MANUAL METHODS EXCAVATE PATH FOR BOTTOM SLINGS. PUSH THROUGH WITH ROD OR LEADER AND SECURE SLINGS
RIGGING FOR TANKS V-1, V-2, AND V-3
SCALE 3/8"=1'-0"
NOTE: TANK EMPTY WEIGHT = 8,100 LBS
TANKS V-1, V-2 AND V-3 SHALL BE LIFTED FROM EXCAVATION EMPTY.
ANGLE OF CHOKE 76.5°
(2) 26'-0" ENDLESS POLY-SYNTHETIC SLINGS IN A CHOKER CONFIGURATION MINIMUM CAPACITY 2,700 LBS EACH IN CHOKER CONFIGURATION SHOWN
CHOKE SLINGS UNDER TOP FLANGES
V-9
EMPTY WEIGHT = 1,100 LBS
7'-3 1/4" REF
3'-6" REF
V-9 RIGGING
SCALE 3/4"=1'-0"
12'-0"
SEE DETAIL 11
4 PLACES
HSS 8x6x5/16
MIN SLING ANGLE 60°
RATED CAPACITY 20,000 LBS
STENCIL WITH 2" BLACK LETTERS TYP
8"
11'-0"
SPREADER BEAM DETAIL 10
SCALE 3/4"=1'-0"
SEE NOTE 4
2 5/8"
2 PLCS
R2"
2"ø HOLE
3/4" A36 PLATE
1/4" GUSSETS
1/4"
6"
3"
2"
8"
DETAIL 11
SCALE 3/4"=1'-0"
3/4" A36 PLATE
1/4" GUSSET 2 PLACES
3/16"
4"
2"
2 PLCS
SECTION L
SCALE 3/4"=1'-0"
NOTES
1. USE DYNAMOMETER TO VERIFY ALL LIFTS.
2. SPREADER BEAM MAY BE FABRICATED OR PURCHASED PREMANUFACTURED. PREMANUFACTURED SPREADER BEAMS SHALL BE RATED, TESTED AND CERTIFIED BY MANUFACTURER TO MEET THE REQUIREMENTS OF ASME B30.20. TEST LOADING CERTIFICATION SHALL BE PROVIDED. PREMANUFACTURED BEAMS SHALL PROVIDE LIFT SPREAD AS SHOWN.
3. SUBCONTRACTOR FABRICATED BEAM. FABRICATE SPREADER BEAM IN COMPLIANCE WITH THE REQUIREMENTS OF ASME B30.20 "BELOW THE HOOK LIFTING DEVICES". ALL WELDING SHALL BE IN ACCORDANCE WITH AWSD14.1. VISUALLY INSPECT ALL WELDS. LOAD TEST IN ACCORDANCE WITH ASME B30.20.
4. INSTALL 150# BLANK FLANGES ON ALL PIPE OPENINGS INCLUDING MANWAY ON ALL TANKS PRIOR TO LIFTING. INSPECT TANKS FOR CLEANLINESS REQUIREMENTS PRIOR SEALING.
5. VISUALLY INSPECT TANKS, PRIOR TO LIFTING, FOR CRACKS, CORROSION, OR DAMAGE. DAMAGED AREAS, IF PRESENT, SHALL BE EVALUATED BY ENGINEERING PRIOR TO LIFTING. ALLOWABLE CORROSION LIMIT OF 1/8" IS ACCEPTABLE.
REVISIONS
REV
DESCRIPTION
EFFECTIVE DATE
FOR DRAWING INDEX SEE DRAWING NO. 628443
SUBCONTRACT NO. N/A
RECOMMTR C. Mc DANNEL
DESIGN P. BRAGASSA
DRAWN J. MONCUR
PROJECT NO. 22901
SPEC. CONT.
SCALE: 3/8" = 1'-0"
SCALE: 3/4" = 1'-0"
FOR REVIEW/APPROVAL SIGNATURES SEE DAR NO. 113754
DESIGN PHASE AFC
SAFETY CATEGORY CG
EFFECTIVE DATE 7/20/04
INEEL
TAN
TSF-09/18 V-TANKS REMEDIATION
RIGGING DETAILS AND SECTIONS
SYS. CHG. CODE D
SYS. CODE NUMBER 01MF3
SBCA 1 OPE 1 U 1 DBG 034 9999 02 060
DWG 628461
REV
SCALE NONE
SHEET C-18