Document ID: EDF-4494
Revision ID: 1
Effective Date: 06/18/04

Engineering Design File

PROJECT NO. 23927

Criticality Safety Evaluation for the Accelerated Retrieval Project for a Described Area within Pit 4

Idaho National Engineering and Environmental Laboratory

Form 412.14
10/9/2003
Rev. 05

ENGINEERING DESIGN FILE

EDF No.: 4494 EDF Rev. No.: 1 Project File No.: 23927

1. Title: Criticality Safety Evaluation for the Accelerated Retrieval Project for a Described Area within Pit 4

2. Index Codes:
Building/Type RWMC Waste Areas SSC ID N/A Site Area RWMC

3. NPH Performance Category: _____ or ☒ N/A

4. EDF Safety Category: _____ or ☒ N/A SCC Safety Category: _____ or ☒ N/A

5. Summary:

This criticality safety evaluation provides documentation of an analysis of the Accelerated Retrieval Project for a nuclear criticality event. Specifically, the project plans were assessed to identify criticality controls related to the Accelerated Retrieval Project to ensure that a criticality hazard will not be likely under credible scenarios. Because of the controls implemented and the inherent subcritical nature of the waste, a criticality alarm system is not required for this operation. The project will be implemented at the Subsurface Disposal Area within the Radioactive Waste Management Complex at the Idaho National Engineering and Environmental Laboratory.

6. Review (R) and Approval (A) and Acceptance (Ac) Signatures:
(See instructions for definitions of terms and significance of signatures.)

	R/A	Typed Name/Organization	Signature	Date
Performer/ Author	N/A	Paul J. Sentieri/3N22	Paul Sentieri	6/16/04
Technical Checker	R	Mark N. Neeley/3N22	Mark Neeley	6/16/04
Reviewer	R	Michael A. Thieme/3N21	M Thieme	6/16/04
Reviewer	R	Stephanie L. Austad/3F30	Stephanie Austad for PFR	6/18/04
Reviewer	R	Clinton E. Sisson/3F71	PAUL SENTIERI FOR CES PER TRLSW Email	6/18/04
Reviewer	R	Douglas A. Wale/3C70	PAUL SENTIERI FOR DAW PER TRLSW Email	6/18/04
Approver	A	J. Todd Taylor/3K22	J. Todd Taylor	6/18/04
Requester	A	David E. Wilkins/3F30	David E. Wilkins	6/18/04
Doc. Control	Ac	Juana Cruz	Juana Cruz	6/18/04

7. Distribution: (Name and Mail Stop) Paul J. Sentieri (MS 3458), Michael A. Thieme (MS 3920), Stephanie L. Austad (MS 3920), J. Todd Taylor (MS 3458), David E. Wilkins (MS 3920), Doug A Wale (MS 4201), Clinton E. Sisson (MS 4203), and Jennifer Olson (Records Coordinator) (MS 3920).

8. Does document contain sensitive unclassified information? ☐ Yes ☒ No
If Yes, what category: N/A

9. Can document be externally distributed? ☒ Yes ☐ No

10. Uniform File Code: 6102 Disposition Authority: ENV1-h-1
Record Retention Period: See LST-9

11. For QA Records Classification Only: ☐ Lifetime ☒ Nonpermanent ☐ Permanent
Item and activity to which the QA Record apply: Accelerated Retrieval Project, Pit 4, Area G, SDA

12. NRC related? ☐ Yes ☒ No

EDF No.: 4494 EDF Rev. No.: 1 Project File No.: 23927

1. Title:	Criticality Safety Evaluation for the Accelerated Retrieval Project for a Described Area within Pit 4
2. Index Codes:	
Building/Type	RWMC Waste Areas SSC ID N/A Site Area RWMC
13. Registered Professional Engineer's Stamp (if required)	
N/A	

CONTENTS

ACRONYMS 7

1. INTRODUCTION 9

1.1 Purpose 9

1.2 Scope 9

1.3 Background 9

1.4 Objective 12

2. DESCRIPTION 13

2.1 Waste Content 13

2.1.1 Plutonium and Uranium 14

2.2 Preretrieval Operations 15

2.3 Bulk Waste Retrieval within Retrieval Enclosure 16

2.4 Dust Abatement Process 18

2.5 Drum Packaging System 18

2.6 Lag Storage of Packaged Targeted Waste Drums 19

2.7 Assay Trailer and Sample Support Trailer 19

2.8 Storage of Loaded Targeted Waste Drums 20

3. REQUIREMENTS DOCUMENTATION 21

4. METHODOLOGY 22

5. DISCUSSION OF CONTINGENCIES 23

5.1 Waste Retrieval and Drum Packaging Operations 23

5.1.1 Scenario One 23
5.1.2 Scenario Two 25
5.1.3 Scenario Three 25
5.1.4 Scenario Four 26

6. EVALUATION AND RESULTS 27

6.1 Assumptions 27

6.2 Criticality Control 27

6.3 Parameters Affecting Criticality 28

6.3.1 Fissile Mass 29
6.3.2 Moderator 29
6.3.3 Geometry 29
6.3.4 Diluents and Neutron Absorbers 29
6.3.5 Reflection 29
6.3.6 Concentration and Distribution of Fissile Material 30
6.3.7 Fissile Material Amounts Necessary in Targeted Waste Forms to Postulate Unsafe Conditions 30
6.3.8 Fissile Material Amounts Necessary in Nontargeted Waste Forms to Postulate Unsafe Conditions 33

6.4 Process Areas 34

6.4.1 Operations in the Retrieval Enclosure 34
6.4.2 Drum Packaging System 37
6.4.3 Waste Package Lag Storage Areas 38
6.4.4 Fissile Assay Monitor Trailer and Sample Support Trailer 38
6.4.5 Waste Package Interim Storage Arrays 38
6.4.6 Criticality Alarm System 39

7. DESIGN FEATURES AND ADMINISTRATIVELY CONTROLLED LIMITS AND REQUIREMENTS 40

7.1 Engineering Controls 40

7.2 Administrative Controls 40

7.2.1 Operations in the Presence of Free Liquid 40
7.2.2 Firefighting Restrictions in Drum Packaging Station 40
7.2.3 Lids on Drums 40
7.2.4 Lag Storage of Waste Drums 40
7.2.5 Storage of Assayed Waste Drums 41
7.2.6 Storage of Overloaded Drums 41

8. SUMMARY AND CONCLUSIONS 42

9. REFERENCES 43

FIGURES

1. Map of the Idaho National Engineering and Environmental Laboratory showing the location of the Radioactive Waste Management Complex and other major Site facilities 10

2. Graphic illustration of the Accelerated Retrieval Project described area at Pit 4 within the Radioactive Waste Management Complex..... 11

3. Retrieval Enclosure structure and attached airlocks 15

4. Tray for targeted waste 17

5. View of a single drum packaging workstation..... 19

6. View of Accelerated Retrieval Project Storage Enclosure 20

TABLES

1. Taxonomy of drums expected to be located during Accelerated Retrieval Project retrieval operations 13

2. Scenarios for Accelerated Retrieval Project waste retrieval operations 24

3. PuO_2 homogeneously distributed in sludge within a waste drum 31

4. PuO_2 in Series 741 and 743 sludge in spherical form at optimum moderation 31

This page is intentionally left blank.

ACRONYMS

ARP	Accelerated Retrieval Project
CSE	criticality safety evaluation
DPS	drum packaging station
FGE	fissile gram equivalent
HEPA	high-efficiency particulate air
INEEL	Idaho National Engineering and Environmental Laboratory
NTW	nontargeted waste
PCS	potentially contaminated soil
RFP	Rocky Flats Plant
RWMC	Radioactive Waste Management Complex
SDA	Subsurface Disposal Area
TRU	transuranic
WIPP	Waste Isolation Pilot Plant

This page is intentionally left blank.

Criticality Safety Evaluation for the Accelerated Retrieval Project for a Described Area within Pit 4

1. INTRODUCTION

Evaluation of shipping and burial records of containerized radioactive materials and sludge from the Rocky Flats Plant (RFP)[a] and low-level radioactive waste generated at the Idaho National Engineering and Environmental Laboratory (INEEL) has resulted in the identification of specific, high-density target areas for potential waste retrieval within the Subsurface Disposal Area (SDA) at the INEEL. Of the numerous waste disposal described areas within the SDA, the U.S. Department of Energy Idaho Operations Office, with agreement from the U.S. Environmental Protection Agency and the Idaho Department of Environmental Quality, selected a described area within Pit 4 at the SDA as the highest priority retrieval area. The scope of the Accelerated Retrieval Project (ARP) is the retrieval of transuranic (TRU) waste from this specific, 1/2-acre area. The ARP will be located within Pit 4 of the SDA at the Radioactive Waste Management Complex (RWMC) of the INEEL. A map of the INEEL showing the location of the RWMC is provided in Figure 1. Figure 2 presents a graphic illustration of the ARP within the described area at Pit 4.

1.1 Purpose

This criticality safety evaluation (CSE) documents an analysis of the potential for a nuclear criticality event during execution of the ARP and identifies controls that prevent such an event.

1.2 Scope

This CSE documents the evaluation of potential criticality concerns for retrieval of TRU waste (Pu-239) from pits in a specifically described area of Pit 4. This document is applicable to any of the TRU pits within the RWMC.

This CSE also documents the analysis of project plans to identify criticality controls related to the retrieval process to ensure that a criticality hazard is beyond extremely unlikely with controls implemented.

1.3 Background

The RWMC was established in the early 1950s as a disposal site for solid low-level waste generated by operations at the INEEL and other U.S. Department of Energy laboratories. Radioactive waste materials were buried in underground pits, trenches, and soil vault rows and stored at one aboveground pad (Pad A) at the SDA. Since 1970, TRU waste has been kept in interim storage in containers on asphalt pads at the Transuranic Storage Area.

---

a. The RFP is located 16 mi northwest of Denver. In the mid-1990s, the RFP was renamed the Rocky Flats Plant Environmental Technology Site. In the late 1990s, it was renamed again to its current name, the RFP Closure Project.

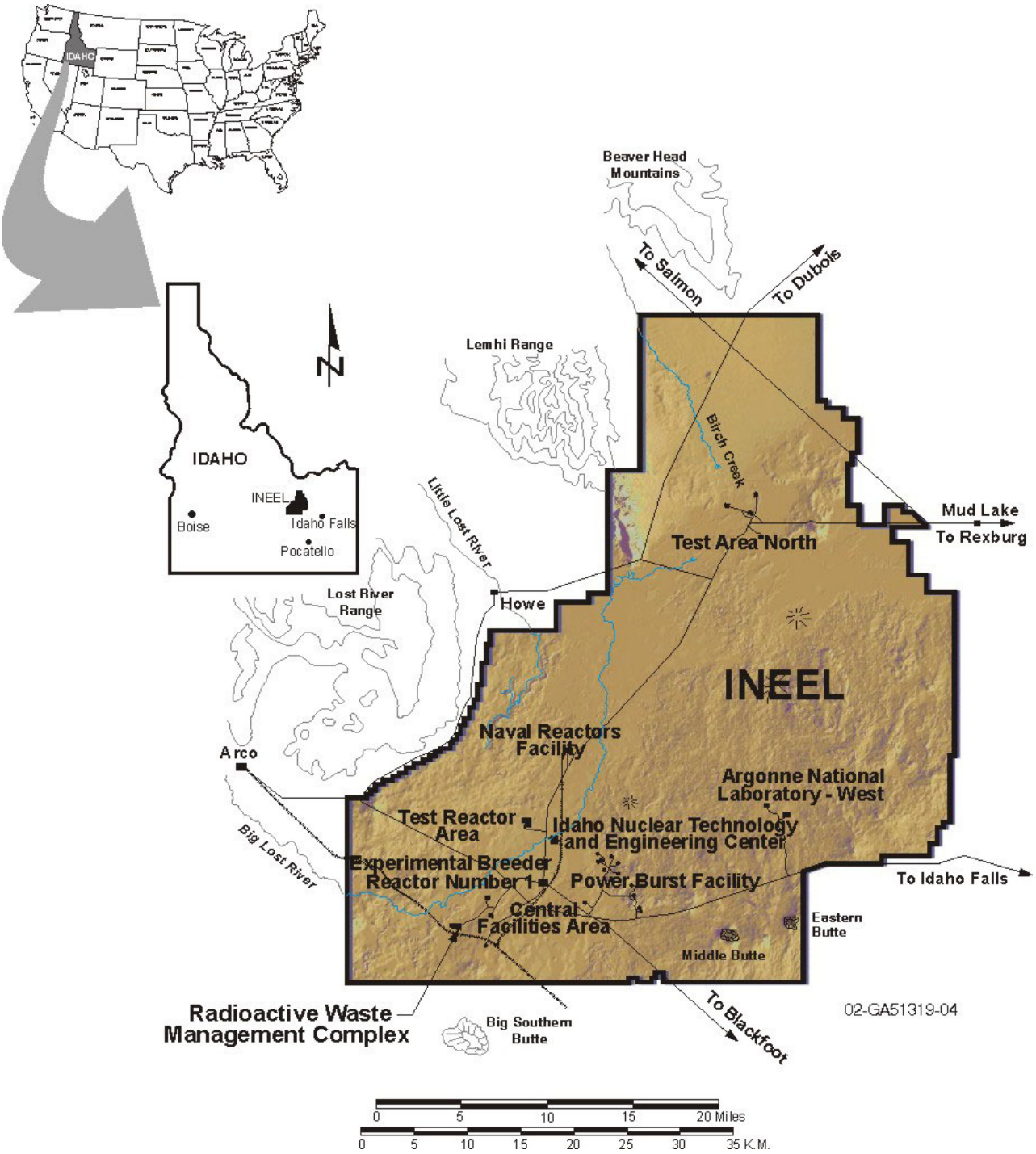

Figure 1. Map of the Idaho National Engineering and Environmental Laboratory showing the location of the Radioactive Waste Management Complex and other major Site facilities.

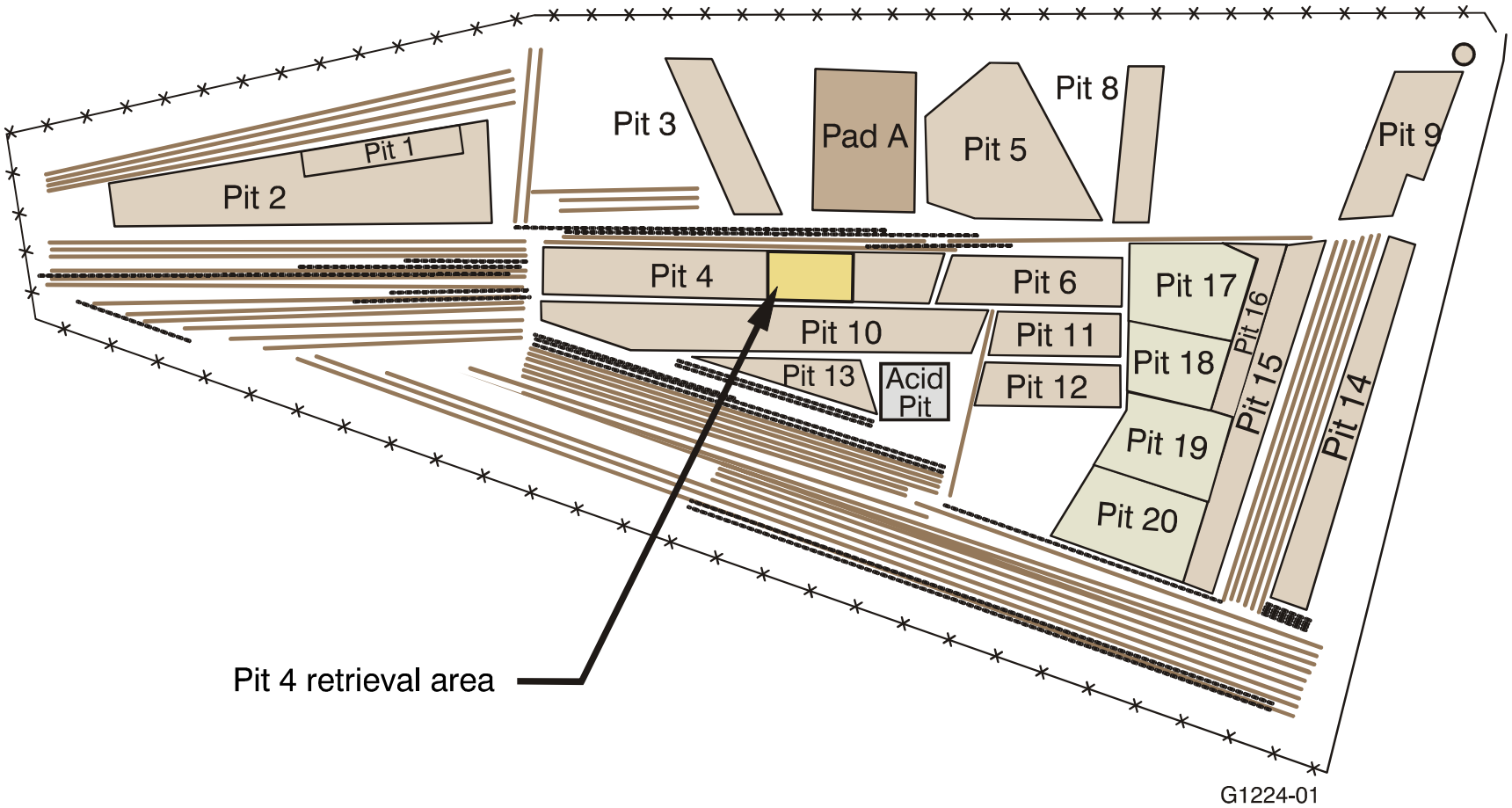

Figure 2. Graphic illustration of the Accelerated Retrieval Project described area at Pit 4 within the Radioactive Waste Management Complex.

1.4 Objective

The objective of the ARP is to safely remove and containerize targeted buried waste (e.g., sludge, graphite, filter media, and uranium) from a described area within Pit 4. The ARP will demonstrate safe removal and repackaging of TRU waste from a described area of Pit 4 within the RWMC. This waste then will be relocated to a safe storage configuration until further disposition of the waste at the Waste Isolation Pilot Plant (WIPP).

Nontargeted waste (e.g., combustibles, metals, and glass) will be placed into nontargeted, free-standing waste bags that eventually will be returned to the excavation. The majority of waste buried in this area consists of by-products from the nuclear weapons program plutonium-manufacturing process. Most of the original waste was packaged in 55-gal drums, 4 × 4 × 8-ft wooden boxes, and smaller cardboard boxes or was disposed of directly in the pit.

The possibility of causing a criticality event during the excavation and retrieval process can be postulated; however, the probability is extremely unlikely, even without applying controls. Process knowledge and archived retrieval reports indicate that waste containers are in various stages of deterioration. Integrity of the containers may range from completely disintegrated to structurally sound.

Changing the waste environment (e.g., excavating and retrieving an overloaded drum that contains greater than 380 g of fissile mass) may increase the fissile-mass density, increase moderation, or create a more favorable geometry for criticality. Changing one or all of these criticality parameters may increase reactivity within the project retrieval area. However, it is not possible to form a critical system for the types of waste materials present in the SDA without the presence of sufficient moderating material (e.g., water). Even if moderating materials were present and no controls were instituted, creation of a critical system would be extremely unlikely because the parameters affecting criticality would need to be in near-optimum states. These parameters include fissile mass sufficient to achieve criticality (1) in the presence of sufficient moderator material, (2) in near-optimized geometry, (3) at optimum concentration, (4) with the lack of diluent material or some mild neutronic absorbers, and (5) near-optimal reflection.

2. DESCRIPTION

The following subsections describe each process of the project and associated criticality implications in more detail.

2.1 Waste Content

A review was performed to estimate the types of waste buried in the described area. This review concluded that RFP and non-RFP waste is buried in the described area. The study estimated that the described area contains a volume of waste equivalent to approximately 17,670 drums (EDF-4478). A drum equivalent is given because not all of the waste in the area was disposed of in drums. Some waste was contained in drums, cardboard boxes, and larger wooden crates, and some material was placed directly into the pit. The waste classification is given in Table 1, which also includes a description of the waste type (EDF-4478). For criticality safety purposes, the waste found in the described area is representative of waste forms expected in all of the TRU pits and trenches; consequently, this CSE is applicable for any of the TRU pits where similar retrieval methodologies will be employed.

Table 1. Taxonomy of drums expected to be located during Accelerated Retrieval Project retrieval operations.

Equivalent Number of Drums	Waste Type	Description
		Rocky Flats Plant Waste
923	Series 741 sludge	Waste consisting of wet sludge produced from treating aqueous process waste (e.g., ion-exchange column effluent, distillates, and caustic scrub solutions).
784	Series 742 sludge	Waste consisting of wet sludge produced from treatment of all other plant radioactive and chemical contaminated waste and further treatment of the first-stage effluent.
750	Series 743 sludge	Organic waste (e.g., degreasing agents, lathe coolant, and hydraulic oils).
118	Series 744 sludge	Series 744 sludge contains organic liquids that were stabilized with cement rather than calcium silicate.
193	Beryllium	Waste identified as coming from Rocky Flats Plant Buildings 444, 776, or 777.
125	Roaster oxide	Some waste from Rocky Flats Plant Building 444. This roaster oxide is incinerated depleted uranium.
495	Graphite material	Graphite molds generated by foundry operations and plutonium recovery operations.
1,850	Filters	Various high-efficiency particulate air filters and process filters.
1,935	Combustible debris	Waste comprising paper, plastic, wood, and other combustible materials.
5,080	Metal debris	Primarily metallic materials (e.g., pipe, conduit, and empty drums).
1,961	Mixed debris	General waste that includes combustible material, glass, sand, and metal.
		Non-Rocky Flats Plant Waste
169	Sludge	Sewage sludge—low curie content, containers, and truckloads.
257	Combustible debris	Waste comprising paper, plastic, wood, and other combustible materials.
1,981	Metal debris	Primarily metallic materials (e.g., pipe, conduit, and empty drums).
1,047	Mixed debris	General waste that includes combustible material, glass, sand, and metal.

2.1.1 Plutonium and Uranium

Plutonium in the SDA consists of weapons-grade plutonium. Assaying drums received from the RFP and previously housed in aboveground storage indicates that a very small percentage of drums exceeds 200 g of Pu-239 fissile gram equivalent (FGE). The FGE, as further used in this report, will be in reference to Pu-239 FGE. Of the drums categorized as in excess of 200 g FGE, a single drum was not able to be assigned an FGE based upon assaying, since it contained a waste matrix (tantalum) that lead to an inconclusive assay result. This drum is being treated as overloaded. A review of generator records from RFP indicates that the drum FGE loading is less than 200 g. However, this drum is still conservatively being treated as an overloaded drum. Of the other drums that were assayed and determined to have a measured fissile loading in excess of 200 g FGE, none had a measured assay value in excess of 380 g FGE. Although these data were developed after waste was buried, they are useful as data points for the drums currently buried in the pits and trenches.

Records indicate that uranium is present in the described area. The majority of the uranium is in the form of roaster oxide. Roaster oxide waste form is defined as uranium oxide created by the thermal stabilization of chips produced during the machining of uranium metal. The majority of this material is in the form of depleted uranium. Therefore, roaster oxide does not create any criticality safety concerns. However, it is possible to encounter enriched uranium during the retrieval process, and the packaged targeted waste will be assayed for U-235 and U-233 content (SPC-417).

Burial records indicate that waste material expected to be encountered in the waste retrieval area comprises a range of materials, some of which have the potential for being overloaded.

The nature of the operation and the controls that will be implemented reduce the importance and need to completely understand the fissile content in the dig area with a high degree of certainty. Even if records existed to support individual package fissile content, the method used to place waste into some of the pits (e.g., dumping from a truck) and the probable deterioration of the waste packages themselves would lead to a conclusion that some intermixing between packages has occurred. The Operable Unit (OU) 7-10 Glovebox Excavator Method Project observed considerable soil within and between waste (estimated to be between 40 and 70% of the waste).

For the waste forms, it is not possible to create an unsafe condition without the presence of moderating materials that can be readily interspersed within an unsafe amount of fissile material in a near-ideal geometry. Intimate mixing of fissile and moderating materials is necessary to postulate creation of a system with optimum geometry, optimum moderation, lack of diluent or absorber materials, and full reflection. Lacking sufficient moderating material, the fissile masses necessary to postulate an unsafe condition in a localized area within the SDA cannot be considered expected or reasonable.

In addition, a limit will be placed on the allowed fissile loading for individual waste packages before placement into storage.

2.2 Preretrieval Operations

The entire proposed retrieval area will be enclosed by the ARP Retrieval Enclosure, which will provide weather protection for the retrieval process. The Retrieval Enclosure is a commercially available, standard tension-membrane structure, approximately 170 ft wide by 288 ft long, with a 20-ft minimum interior clearance at the eaves. It is constructed of a prefabricated steel frame covered with an outer fabric membrane and an inner fabric membrane (see Figure 3).

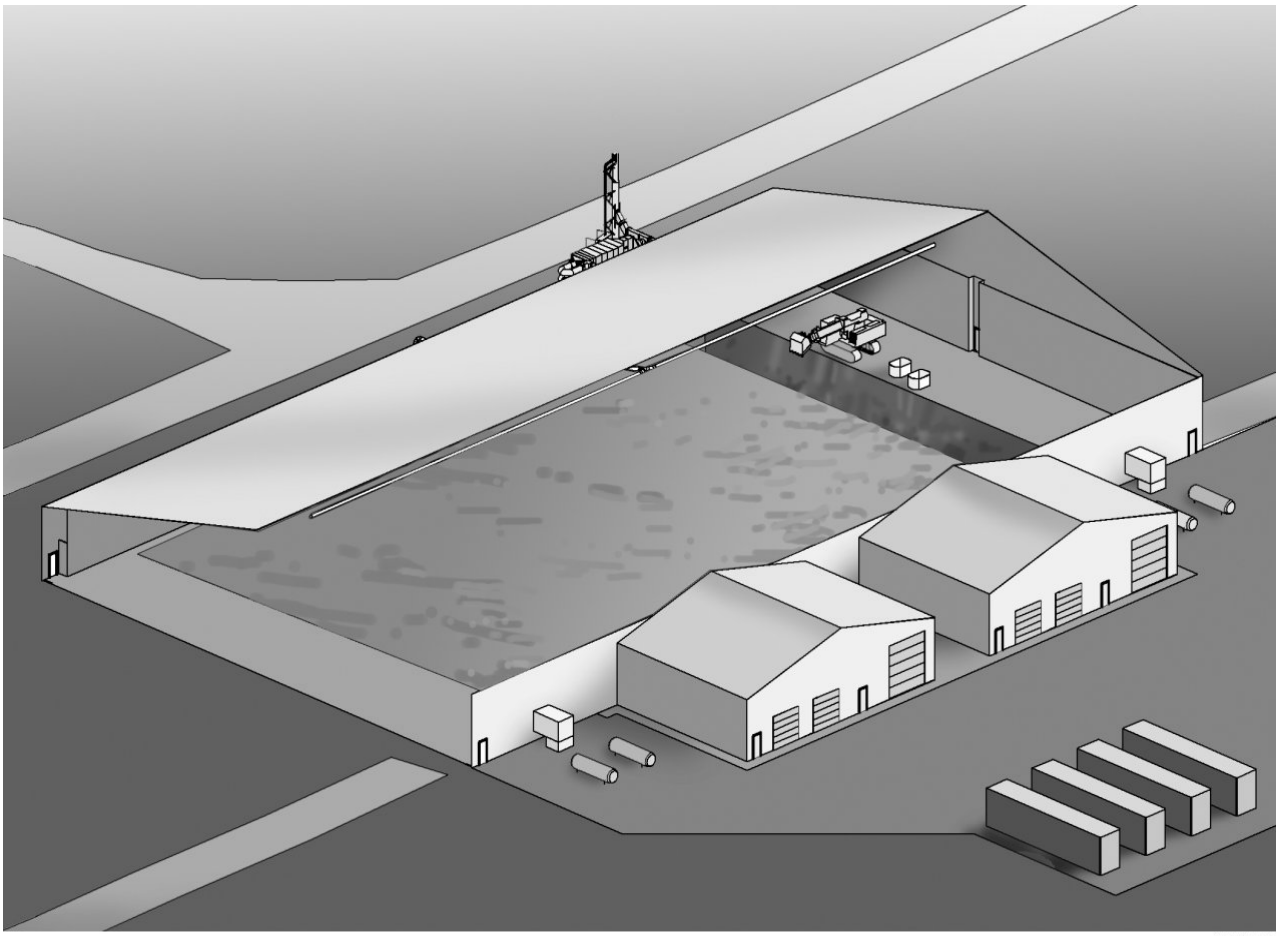

G1217-01

Figure 3. Retrieval Enclosure structure and attached airlocks.

Two adjacent tension-membrane structure airlocks will be connected to the Retrieval Enclosure. Airlock 1 contains a Gradall service bay, telehandler service bay, and a personnel airlock. Airlock 2 contains six drum packaging stations (DPSs) and supports WIPP visual examination, sampling, waste packaging, and drum loadout operations.

Additionally, plans call for the application of a polymer-based emulsion coating to the entire ground surface above the proposed retrieval area before any excavation. This coating, when mixed with soil, will provide a layer that will constitute the floor surface within the Retrieval Enclosure. This application provides a surface over the retrieval area, providing additional stability against subsidence and a working surface for operations. To retrieve the waste, the excavator will break through this surface and begin to dig into the waste-zone materials.

These preretrieval activities will have no impact on the criticality safety aspects of the area.

2.3 Bulk Waste Retrieval within Retrieval Enclosure

A brief description of the retrieval process is provided in this section. A thorough description can be found in the *Excavation Plan and Sequential Process Narrative for the Accelerated Retrieval Project for a Described Area within Pit 4* (Preussner et al. 2004). Operators in personal protective equipment will operate an excavator to retrieve targeted waste from the described area within Pit 4. The excavator will operate above grade. The first step is to remove a 2-ft-deep layer of potentially contaminated soil (PCS). As the PCS is removed, it will be piled next to the pit or another location within the Retrieval Enclosure that is dictated by operational needs. Following removal and relocation of PCS, the exposed waste-zone material will be excavated in intervals across the entire width of the designated area.

The initial trench will be excavated as the first step after the PCS has been removed. At the digface, an operator assisting the excavator operator by way of closed-circuit television cameras will make a target or nontarget waste determination. An underlying assumption of this retrieval effort is that a determination can be made between targeted and nontargeted waste (NTW). Experience in the OU 7-10 Project validates this assumption because observation during the process determined identification was feasible. It is understood that small fragments of targeted waste may be intermixed with the NTW as it is placed into the NTW bags. This will not create an unsafe condition. At the digface, the NTW will be separated from the targeted waste in order to determine the disposal path. Since this sorting is being done at the digface by the excavator, it is recognized that fine segregation is not possible with respect to small, intermixed pieces of targeted waste in a grouping of NTW.

Nontargeted waste will be placed directly in NTW containers during excavation of the initial trench. Nontargeted waste includes those types of waste expected to contain lower TRU quantities (e.g., soil, personal protective equipment, glass, metal debris, and drum remnants). The NTW container will be a freestanding bag with a 1.6-yd^3 capacity.

During creation of the initial trench, targeted waste (i.e., Series 741 and 743 sludge, graphite, intact filters, filter media, and uranium) will be identified by visual examination at the digface. The equipment operator will place the targeted waste directly into targeted-waste-handling trays (see Figure 4). Each lined tray will receive a single bucket load of targeted waste material. The waste-handling trays will be moved by forklift from the Retrieval Enclosure to the airlock and into the sorting section of the drum packaging system. Inside dimensions of the targeted waste trays are 60 in. long by 35.8 in. wide by 8 in. deep.

After the initial trench is completed, excavation of the moving trench will begin. Creation of the moving trench will begin at the west end of the retrieval area (initial trench) and proceed east. Waste retrieval will be accomplished by excavating targeted waste and NTW on the east face of the trench.

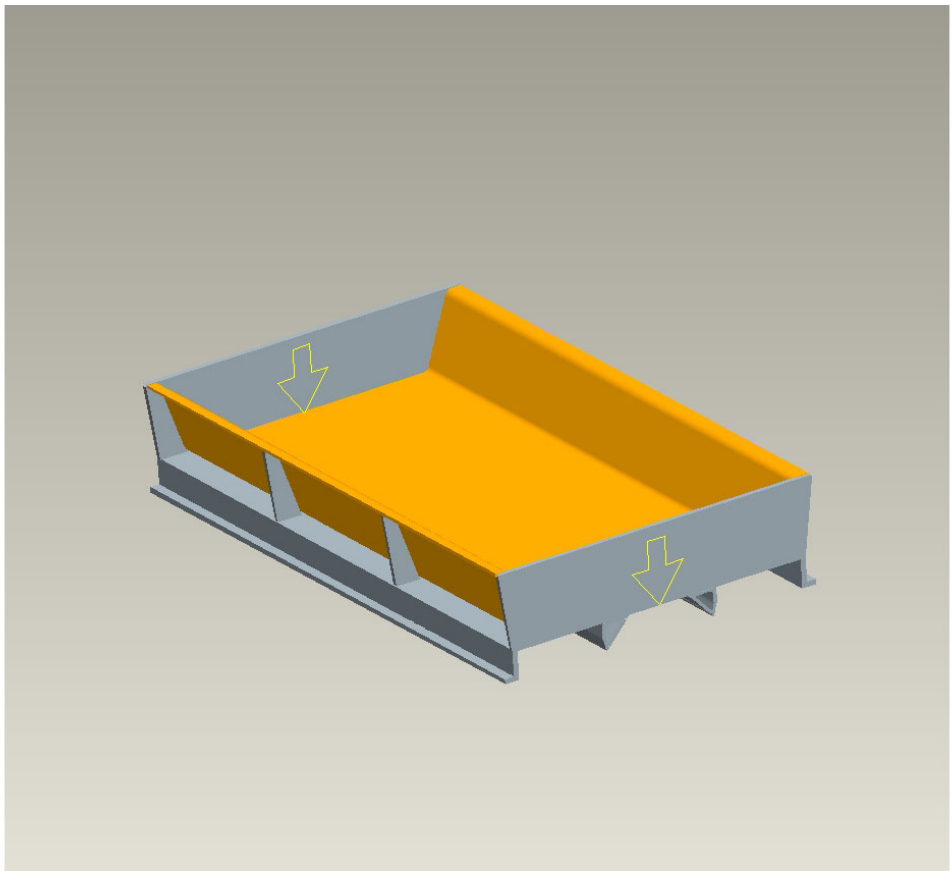

Figure 4. Tray for targeted waste.

A predetermined depth of the exposed waste shelf will be excavated while an approximate 1:1 angle of repose is maintained. At the digface, an operator will make a targeted waste or NTW determination while assisting the excavator operator by using closed-circuit television cameras. As in the case of the initial trench, the excavator will retrieve targeted waste and place the waste into a targeted waste tray to be transported to a DPS by forklift. During this moving-trench excavation, NTW will be placed directly on the west face of the trench at the waste-and-underburden interface. The staged NTW containers from the initial trench campaign will be returned to the pit and placed on the newly formed NTW shelf along the west face.

Waste from within the moving trench will be removed along the length of the trench. As described, the NTW is placed on the west edge, and the targeted waste is placed in lined trays for removal and packaging. Once the waste has been removed, the PCS along the top layer of the east edge of the trench will be placed on top of the NTW shelf on the west side of the trench. The process will continue as described until retrieval is complete.

2.4 Dust Abatement Process

Airborne contamination generated during the retrieval process is a concern. Options are being considered to control the amount of dust generated during retrieval operations to limit contamination levels in the Retrieval Enclosure. Phases of the operation expected to generate the majority of dust are the actual waste retrieval and dumping the waste. The waste and the area from which the waste was retrieved could be sprayed with the polymer coating if dust generation caused by excavation posed a problem. Application of the polymer coating over the actual waste-zone materials would be in the form and viscosity of a waterlike mist and would penetrate approximately 1/4 to 1/2 in. into the surface of the exposed waste material and soil mixture.

To address the issue of dust creation as the excavator bucket dumps waste, the previously discussed polymer-based emulsion coating may be applied to the surface of the waste material after it has been dumped.

2.5 Drum Packaging System

As described in the previous section, targeted waste from within the pit will be placed in lined targeted waste trays and transported to the DPSs by the telehandler. The telehandler will pick up a tray of targeted waste and transport it to the DPS external rail system, which in turn, will move the tray into the DPS. A total of six DPSs will comprise the drum packaging system, and each station will be equipped with a single drum loadout port. An example of a DPS is shown in Figure 5. Once inside the DPS, further visual examination will take place. The purpose of this examination is to search for liquids and prohibited items (e.g., compressed gas cylinders and explosives). Once the targeted waste is determined to be free of prohibited items and has been verified as targeted waste, it will be placed in a drum for packaging.

The targeted waste trays will be lined with nylon liners similar to those used in the OU 7-10 Project. The liners will be moved by a hoist from the tray and placed into a 55-gal drum. Drum lids and locking rings will be placed on the loaded drums before they are removed from the DPS. If necessary, the drums will be decontaminated at this time.

Acceptable waste will be packaged into 55-gal drums and prepared for assay. Once the drums are closed and removed from the DPS, their placement will need to comply with spacing requirements for lag storage. Additionally, unassayed drums of targeted waste will be required to remain closed with their lids in place once outside of the DPS.

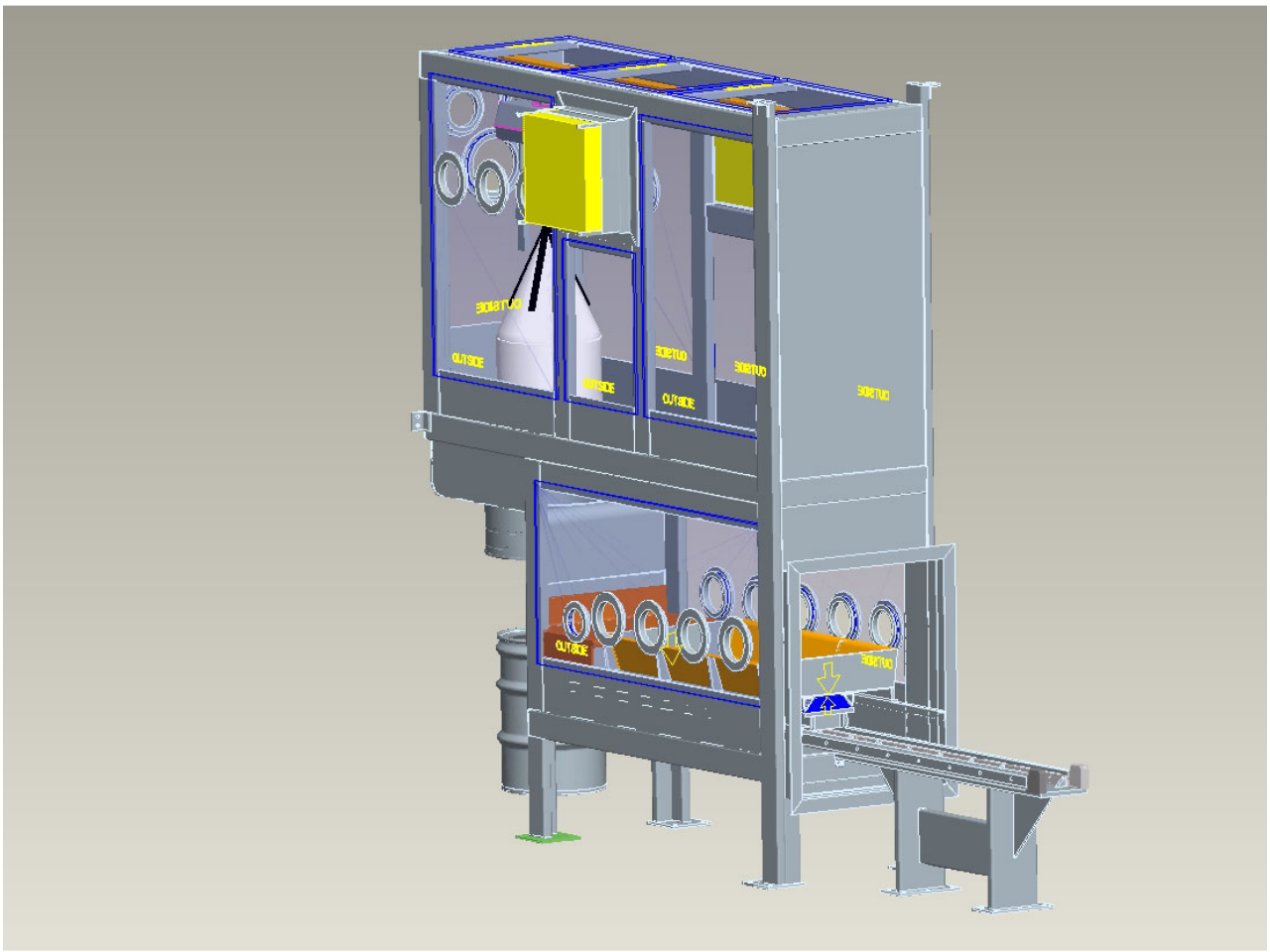

Figure 5. View of a single drum packaging workstation.

2.6 Lag Storage of Packaged Targeted Waste Drums

Once the closed drums are removed from the DPS, they will be considered to be in lag storage. Lag storage will consist of a single planar array of closed drums configured with an edge-to-edge spacing of 16 in., or greater, between drums and other fissile material.

2.7 Assay Trailer and Sample Support Trailer

Drums will be removed from lag storage and brought to the assay trailer for determination of fissile content (i.e., FGE). Drums meeting the fissile loading requirements then will be stored in accordance with an approved storage configuration. Those not meeting the fissile loading requirements will be segregated until future repackaging is performed.

The sample support trailer will be used to determine the fissile loading of samples before shipment of samples to the laboratory for further analysis. The sample support trailer will house a relocated Glovebox Excavator Method Project fissile material monitor to assay the samples for fissile content. The samples will be brought from the DPS in a french can to a glovebox attached to the outside of the sample support trailer. A double-door transfer will be used to bring the samples into and out of the glovebox. The samples will be transported to the laboratory for analysis once they have been fissile assayed and shown to comply with the shipping package fissile loading limits.

2.8 Storage of Loaded Targeted Waste Drums

Every loaded drum containing targeted waste will be assayed for fissile content. This will ensure container fissile loading limits are met before drum placement into the Storage Enclosure (see Figure 6). Once assayed and shown to comply with fissile loading requirements, drums will be stored in an approved array.

Drums that exceed the fissile loading limits per drum will be stored in accordance with proper spacing and isolation requirements.[b]

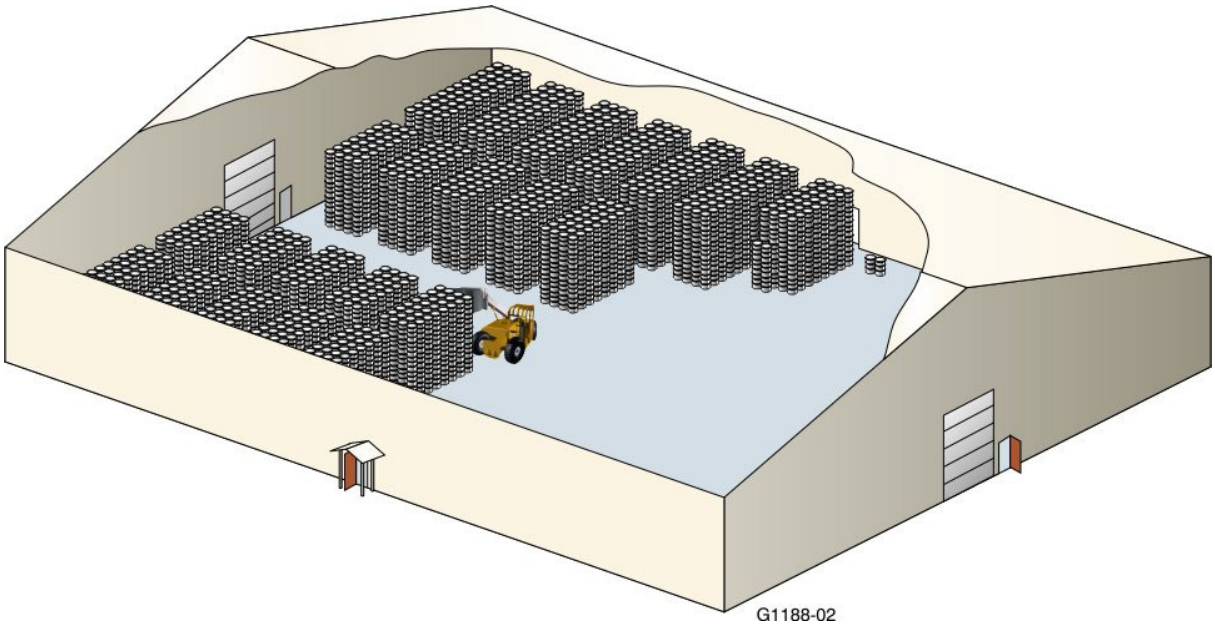

Figure 6. View of Accelerated Retrieval Project Storage Enclosure.

b. Woods, Kenneth B. and Mark N. Neeley, 2001, *Criticality Safety Evaluation for Overloaded Drums at the Radioactive Waste Management Complex*, INEL/INT-97-00695, Rev. 1, Idaho National Engineering and Environmental Laboratory.

3. REQUIREMENTS DOCUMENTATION

No special documentation requirements are applicable to this CSE.

4. METHODOLOGY

Calculational models were developed for previous evaluations (Sentieri 2003a; Sentieri 2003b). The calculations used the Monte Carlo N-Particle Transport Code computer program (RSIC 1997) to assess the criticality potential associated with various activities. Some results from these evaluations covering the activities in the SDA, including the OU 7-10 Project, are referenced in this report and the ARP. The Monte Carlo N-Particle Transport Code program and validation of the Monte Carlo N-Particle Transport Code for these calculations were described in the associated evaluations.

5. DISCUSSION OF CONTINGENCIES

The double contingency requirement, as stated in "Facility Safety" (DOE O 420.1A), is defined below:

> The double contingency principle shall be used as a minimum to ensure that a criticality accident is an extremely unlikely event. Compliance with the double contingency principle requires that two unlikely, independent, and concurrent changes in process or system conditions occur before a criticality accident is possible.

Consideration has been given to project scenarios that could have an impact on criticality safety. Requirements of the double contingency principle have been met for those proposed operations in the Retrieval Enclosure. Reliance on administrative controls will be adequate because such a large margin of safety is inherent in these types of waste systems, which by the nature of the waste material would make achieving a critical state extremely unlikely even in the absence of all controls.

5.1 Waste Retrieval and Drum Packaging Operations

Contingency analysis and the controls derived within this report strengthen criticality safety for the retrieval area and open waste containers by controlling operations in the presence of an unsafe amount of moderating material. An unsafe amount of liquid is defined as more than 10 L (2.6 gal) of free liquid in a configuration deeper than 2.6 in. If the solution is less than 2.6 in. deep, then the system will remain safely subcritical. Four scenarios for ARP waste retrieval operations are shown in Table 2 and discussed in the following subsections.

5.1.1 Scenario One

The first scenario (see Table 2) involves an unsafe mass of fissile material during excavation in the waste retrieval area or during waste processing in the DPS, while an unsafe amount of moderating material (i.e., free liquid) is discovered or introduced. Without moderating material, formation of a critical system in the waste configurations is not credible. However, if an unsafe amount of moderating material were present in the fissile-bearing waste material, a critical system could be postulated. The fissile mass would need to be in a configuration that would allow for near-optimum moderation, lack of neutronic poisons or diluents in the system, near-optimum geometrical configuration of the fissile material, and reflection that decreases neutron leakage from the system. Burial records indicate limited amounts of fissile material are present in the waste buried in the retrieval area. However, records from older burial pits cannot be relied on to provide complete assurance that an overloaded fissile material drum will not be discovered. Therefore, controls will be instituted to ensure that an increase in system reactivity does not occur.

Table 2. Scenarios for Accelerated Retrieval Project waste retrieval operations.

Scenario Number	Scenario Description	Contingencies (failure or barrier)	Additional Information
1	Disturbance of an unsafe fissile mass while an unsafe amount of free liquid is discovered or introduced within the Retrieval Enclosure or the DPS	(1) Violation of administrative control prohibiting retrieval operations if an unsafe amount of moderator is encountered during retrieval or drum packaging operations. (2) Achievement of a near-optimal configuration that is required to form a critical system.	Conditions required for a criticality to occur include sufficient mass, optimal moderation, favorable geometry, and insufficient diluent in the waste.
2	Disturbance of an unsafe fissile mass within the DPS with the motive force to create an unsafe condition	(1) Failure of firefighting restriction on use of high-pressure water hose during firefighting activities in the DPS. (2) Achievement of a near-optimal configuration required to form a critical system.	Conditions required for a criticality to occur include sufficient mass, optimal moderation, favorable geometry, and insufficient diluent in the waste.
3	Creation of an unsafe condition because of storage of unassayed waste packages in the lag storage array	(1) Failure to meet requirement that all waste packages outside of the DPS remain closed. (2) Failure to meet spacing requirements for unassayed targeted waste drums when placed into lag storage.	Conditions required for a criticality to occur include sufficient mass, optimal moderation, favorable geometry, and insufficient diluent in the waste. Achievement of a near-optimal configuration required to form a critical system.
4	Creation of an unsafe condition because of storage of overloaded waste packages in the storage array	(1) Failure to meet requirement that all waste packages outside of the DPS remain closed. (2) Failure to meet requirement that all waste packages be fissile monitored and meet fissile loading requirements before placement in a final storage array.	Conditions required for a criticality to occur include sufficient mass, optimal moderation, favorable geometry, and insufficient diluent in the waste Achievement of a near-optimal configuration required to form a critical system.

DPS = drum packaging station

5.1.1.1 Contingency One. The first contingency is an administrative control that prohibits handling of fissile material in the presence of an unsafe amount of free liquid. This control would preclude criticality and ensure that the system remained undisturbed until absorbent material could be added to eliminate the presence of free liquid. By prohibiting disturbance of waste material in the presence of an unsafe amount of free liquid, the motive force necessary to create a near-optimum configuration would not exist. Even if an unsafe amount of fissile material were present, the introduction of moderating material alone would not be enough to postulate the formation of a critical system. This is because a large cache of plutonium oxide alone would not have sufficient volume fraction to optimally moderate the system. If the plutonium oxide were dispersed in the waste matrix, diluents and absorbers would be present, thus increasing the amount of fissile material necessary to create an unsafe condition.

Targeted waste will be examined for contained and free liquids before being placed into a drum within the DPS. The presence of large containers of liquids and uncontained liquids is prohibited by WIPP waste acceptance criteria. The total residual liquids in any payload container (e.g., 55-gal drum or standard waste box) shall not exceed 1% by volume of that container (DOE-WIPP 2004). The targeted waste will be examined to ensure that liquids are not loaded into an unassayed drum.

5.1.1.2 Contingency Two. The second contingency is the fact that formation of a system containing unsafe fissile mass with near-optimum moderation, near-optimum fissile concentration, ideal geometric configuration, lack of neutronic poisons or diluents, and no neutron leakage, such that an unsafe condition can be postulated, is at least unlikely.

5.1.2 Scenario Two

The second scenario (see Table 2) involves formation of an unsafe condition in the DPS because of the introduction of water into an open unassayed drum with enough motive force to create an unsafe condition that violates the firefighting restrictions.

5.1.2.1 Contingency One. The first contingency relates to introduction of an unsafe amount of free liquid into an open drum of unassayed material within the DPS with enough motive force to create an unsafe condition. Firefighting restrictions will exist that allow only the use of compressed air foam or dry chemical system when fighting fires in the drum packaging area in the presence of open drums containing targeted waste.

5.1.2.2 Contingency Two. The second contingency is that the formation of a system containing unsafe fissile mass with near-optimum moderation, near-optimum fissile concentration, ideal geometric configuration, lack of neutronic poisons or diluents, and no neutron leakage, such that an unsafe condition can be postulated, is at least unlikely.

5.1.3 Scenario Three

The third scenario (see Table 2) involves formation of an unsafe condition in the lag storage configuration of unassayed targeted waste drums in which the drums are overloaded with fissile material (in excess of 380 g FGE in multiple drums).

5.1.3.1 Contingency One. The first contingency involves failure of the requirement that waste packages remain closed when outside the DPS. Compliance with this requirement will prevent the inadvertent unsafe introduction of moderator, whereas failure to comply with this requirement could result in formation of an unsafe configuration. There are no firefighting restrictions for lag storage.

5.1.3.2 Contingency Two. The second contingency relates to spacing limits for the unassayed targeted waste packages. Once an unassayed drum of targeted waste is removed from the DPS, it must remain spaced 16 in. from other unassayed drums and other fissile material. The spacing requirement for unassayed waste packages would need to be violated multiple times to postulate an unsafe condition. Next, the unassayed drums of targeted waste would need to actually be overloaded with fissile material. Additionally, the fissile mass in the packages would need to be in an ideal geometric configuration at near-optimum concentration, lacking neutronic poisons or diluents, and some form of free liquid would have to be present.

5.1.4 Scenario Four

The fourth scenario (see Table 2) involves formation of an unsafe condition in the waste package storage configuration in which drums are overloaded with fissile material (in excess of 380 g FGE in multiple drums).

5.1.4.1 Contingency One. The first contingency involves failure of the requirement that waste packages remain closed when outside the DPS. Compliance with this requirement will prevent the inadvertent unsafe introduction of moderator, whereas failure to comply with this requirement could result in formation of an unsafe configuration. There are no firefighting restrictions for waste package storage.

5.1.4.2 Contingency Two. The second contingency relates to the fissile loading limit for waste packages. Every waste package placed in the storage array must be fissile assayed and meet the storage requirements before being placed in the array. This will ensure safe storage. The requirement to fissile assay waste packages would need to be violated multiple times to postulate an unsafe condition where multiple waste packages, which exceed the fissile loading, are placed into the array. Next, the overloaded packages would need to be placed in close proximity to one another. Additionally, the fissile mass in the packages would need to be in an ideal geometric configuration at near-optimum concentration, lacking neutronic poisons or diluents, and would need to have some form of free liquid present.

6. EVALUATION AND RESULTS

The CSE and methods of criticality control evaluated for the ARP are outlined in the following sections, and results from the analysis are presented.

6.1 Assumptions

Assumptions used in the analysis are listed below:

- Amount of fissile mass present is not known with complete certainty
- Targeted waste can be distinguished from NTW at the digface
- Geometry, as a condition of the fissile system, cannot be controlled within the retrieval digface
- Soil will be interspersed within the waste.

As stated previously, the fissile content within the excavation area has been estimated to be low for most waste matrices, but there is some uncertainty with these estimates and the records supporting these estimates. Therefore, an underlying assumption is that the fissile content in the excavation area is not known with certainty.

A basic operational assumption is that the targeted waste can be distinguished from NTW at the digface. This will allow for segregation of waste types into categories for either return to pit or drum packaging. The assumption that a determination between waste types can be made at the digface was validated by the OU 7-10 Project.

Additionally, containers that hold the fissile material (drums and boxes) are expected to be in a degraded state. This was shown to be a reasonable assumption from experience with the OU 7-10 Project. Therefore, the containers cannot be relied on to provide geometrical configuration control for the fissile material as it is removed and placed into the waste packages. Intact waste packages discovered in the retrieval area will be opened to ensure that waste disposal criteria are met.

The last assumption is that soil is intermixed within the waste matrices. This was shown to be a reasonable assumption from experience with the OU 7-10 Project. Estimates from the OU 7-10 Project stated that approximately 40–70% of the waste-zone material included soil. In the case of the targeted waste, an attempt will be made to limit the amount of soil retrieved with the targeted waste. However, the method of using an excavator bucket to retrieve the waste will make it difficult to totally eliminate and separate the targeted waste matrices from the interstitial soil mixed with it. In the case of NTW, no attempt will be made to separate the interstitial soil; therefore, more soil will be mixed within the NTW.

6.2 Criticality Control

The criticality control philosophy for the project is taken from American National Standards Institute and American Nuclear Society standard, “Nuclear Criticality Safety in Operations with Fissionable Materials Outside Reactors” (ANSI/ANS-8.1-1998). This nuclear criticality standard designates criticality control by geometry (e.g., passive engineered controls) as the preferred method. In situations where control by geometry is not practical, control by administrative measures may be considered. In addition, the design and operation of facilities that process material outside of reactors must follow the double contingency principle described in “Nuclear Criticality Safety in Operations with Fissionable Materials Outside Reactors” (ANSI/ANS-8.1-1998). In accordance with the double contingency principle, it is recommended that two separate, independent, unlikely changes in process or

system conditions are required before a criticality accident can occur. When controls cannot be applied to multiple independent parameters, a system of multiple controls on a single parameter is allowed. The number of controls required for a single controlled process parameter is based on reliability of the parameters and any features (e.g., shielding) that minimize the impact of their failure.

Criticality concerns associated with these operations include encountering an unsafe mass of fissile material in the waste retrieval area. The control associated with this concern will be to not allow disturbance of material in the waste zone or DPS in the presence of more than 10 L (2.6 gal) of free liquid no greater than 2.6 in. deep. Experience of the OU 7-10 Project validates the assumption that a very limited amount of free liquid could be encountered within the retrieval area. The OU 7-10 Project encountered a limited amount of free liquid that was absorbed when discovered.

6.3 Parameters Affecting Criticality

The following section discusses parameters that affect criticality as well as the necessary fissile masses and geometrical configurations necessary to postulate an unsafe condition. Parameters that influence whether a system can achieve a critical state are listed below:

- Presence of fissile mass
- Presence of moderator
- Geometrical configuration
- Presence of diluents or neutronic absorbers
- Reflection conditions surrounding the systems
- Concentration of fissile material and nature of their distribution in the system.

Most of these parameters are not controllable. The presence of fissile mass in the waste retrieval area and the existing geometry of material in the waste are not known. The fissile system may be reflected, although not optimally, because the system would exist within soil and waste. Diluent materials that can act as a neutronic absorber are known to exist in the waste material. The quantity and distribution of these materials cannot always be relied on to guarantee that the system will remain in a subcritical state. However, in every case, an unsafe amount of moderator would be required to achieve a critical system.

The expected fissile mass associated with most of the expected waste forms in the waste retrieval area is low (i.e., less than 200 g FGE per buried drum). Assay information for the aboveground drums indicates a low likelihood of encountering an overloaded drum. Waste streams from RFP, particularly those of the targeted waste forms, were the same for both aboveground and belowground waste packages. Although aboveground assaying information does not preclude the possibility of an overloaded package below ground, the information is useful. The aboveground assay data are useful in that they identify waste matrices with a potential for being overloaded and provide a starting point to determine the waste forms to be targeted as containing higher Pu-239 content.

Most of these parameters would require optimization in some combination to achieve a critical system constructed within reasonable constraints. As deviation from optimum conditions occurs, reactivity of the systems decreases dramatically. In addition, as previously stated, an unsafe amount of moderator would be necessary to form a critical system in these waste forms. Each of the above-listed parameters is discussed in further detail in the following sections.

6.3.1 Fissile Mass

The amount of fissile material within the buried waste is one of the parameters that cannot be controlled. However, most of the waste is expected to be close to the disposal limits (200 g FGE per drum); however, overloaded drums could have been shipped. Because of degradation of the buried waste packages and the possibility of commingling of fissile material between waste packages, it also is possible to have localized areas of fissile mass that exceed the disposal limit per drum for an equivalent volume. As other parameters mentioned in this section deviate from near-optimal states, the amount of fissile mass necessary to postulate an unsafe condition increases dramatically.

6.3.2 Moderator

Moderator is key to postulating a criticality in the SDA. Without the presence of sufficient moderating material, it is not realistically possible to formulate a critical system within the buried waste in the SDA. Moderator could be present within the buried waste itself; however, the amount present in such a configuration is very limited. General practice for packaging waste drums did not include filling drums with liquid before shipment for burial. Instead, steps were taken to preclude free liquid within waste drums and packages. Some free liquid that (1) was from disassociated sludge, (2) had accidentally been shipped in smaller containers, or (3) had accumulated in a package because of rain and snowmelt could exist in the waste. However, as previously stated, these amounts would be very limited.

6.3.3 Geometry

In realistic burial conditions, geometry of the fissile material within the waste is far from ideal and far from optimal. As the system deviates from the near-optimal geometrical configurations, the fissile mass necessary to postulate an unsafe condition increases dramatically. As the fissile material distribution becomes less ordered, reactivity of the system decreases.

6.3.4 Diluents and Neutron Absorbers

Diluents and neutron absorbers, which absorb neutrons from the system, decrease the concentration of fissile material, and allow for exclusion of moderator, have a large negative effect on reactivity. The presence of waste material, other than fissile material, will likely increase the fissile mass necessary to postulate an unsafe condition. As neutrons are absorbed in materials other than fissile isotopes, the reactivity of the system decreases and remains subcritical. The larger the presence of neutron absorbers, the larger the fissile mass needed to postulate an unsafe condition. The same applies with diluent material. The larger the presence of diluent material in the waste, the larger the fissile mass necessary to postulate an unsafe condition.

6.3.5 Reflection

The lack of reflection increases the amount of fissile material and the geometric size of the system necessary to postulate an unsafe condition. This is because a tight-fitting, dense reflector will drastically decrease the neutron leakage from the system. Soil and waste do act as reflectors, but they are not as effective as water, saturated soil, or other denser materials (e.g., lead). Voids in the waste (observed during the OU 7-10 Project) and less dense waste materials will have a negative effect on reactivity because the neutron leakage from the system increases as the density of the reflector decreases.

6.3.6 Concentration and Distribution of Fissile Material

Distribution and concentration of fissile material has a large effect on reactivity. As concentration and distribution of the fissile material deviate from near-optimum conditions, reactivity of the system decreases. The nature of the waste and the manner in which the waste was buried produce the possibility of localized areas of increased concentrations but not in conjunction with the other parameters affecting criticality in near-optimal states.

6.3.7 Fissile Material Amounts Necessary in Targeted Waste Forms to Postulate Unsafe Conditions

The following subsections discuss and reference previous CSEs to show the unrealistic quantities of fissile material and ordered geometrical configurations in the various targeted waste forms necessary to achieve an unsafe condition. Previous criticality studies were conducted, which determined the effects associated with addition of water in postulated near-optimal configurations and arrays of fissile material. The *Criticality Safety Study of the Subsurface Disposal Area for Operable Unit 7-13/14* (Sentieri 2003a) discusses the unreasonably large fissile masses and ordered arrangements of fissile mass necessary to postulate a critical configuration. These masses are discussed in more detail in the following sections.

6.3.7.1 Series 74 Sludge. The Series 74 sludge consists of first-stage sludge (Series 741), second-stage sludge (Series 742), organics (Series 743), special setups (Series 744), and salts (Series 745). A more complete description of these sludge forms can be found in the *Acceptable Knowledge Document for INEEL Stored Transuranic Waste—Rocky Flats Plant Waste* (INEEL 2003). Historically, fissile loading in Series 741, 742, and 743 types of sludge and Series 745 salt matrices is very low. The Series 744 sludge matrix has a slightly higher fissile loading than the other four listed matrices.

The main objective of the ARP is to target waste matrices suspected of having higher TRU content. Historical records indicate that Series 741, 742, and 744 sludge is buried in the described area of Pit 4. Operable Unit 7-10 Project operational efforts validate the assumption that the various types of sludge can be readily identified at the digface. Of all the types of sludge, Series 741 and 743 are categorized as targeted waste, with Series 742 and 744 sludge falling into the NTW category. All types of Series 74 sludge are discussed within this section to provide a broader application of this CSE to future retrieval efforts.

A set of computational models was developed (Sentieri 2003b) to determine the fissile mass necessary to create an unsafe condition within these matrices. Both the Series 741 and 742 sludge matrices have a large amount of moisture. Therefore, relatively substantial hydrogen content exists. Two approaches were developed. The first approach evaluated Series 741 sludge containing various concentrations of Pu-239 in the form of PuO_2 distributed homogeneously throughout an entire single waste drum fully loaded with Series 741 sludge. The composition of sludge (Schuman and Tallman 1981) used is given in Sentieri (2003b).

The Series 743 sludge waste matrix consisted of various types of organic liquid waste transferred to RFP Building 774 to be mixed with a synthetic calcium silicate to form a paste or greaselike substance. These organic waste liquids were primarily composed of oil and chlorinated solvents used in degreasing and machining operations in RFP Buildings 707 and 777. The composition of the mixture consisted of approximately 114 L (30 gal) of liquid organic waste to 45 kg of Micro-Cel E (i.e., synthetic calcium silicate). The model assumed full reflection with saturated soil around the entire drum, which is slightly more conservative than water reflection.

In the second approach, PuO_2 was distributed in a system of Series 741 and 743 sludge in the shape of a sphere. For this model, 1,500 g of Pu-239, in the form of PuO_2, was distributed within the sludge material over increasing volumes within a sphere. The radius of the fissile material and sludge was increased to determine optimum conditions. The previous set of cases evaluated fissile concentration over a set volume. This model evaluated varying concentrations for a given fissile mass. The sphere of plutonium and sludge was fully reflected by saturated soil. Results from the two approaches are given in Tables 3 and 4.

Table 3. PuO_2 homogeneously distributed in sludge within a waste drum.

Type of Sludge Series	Concentration of PuO_2 in Sludge (g/L)	Plutonium-239 per Drum (g)	H/Pu Ratio of System	$k_{eff} + 2\sigma$
741	15	2,742.3	827	0.884
743	20	3,656.4	1,254.6	0.460

k_{eff} = effective multiplication factor

Table 4. PuO_2 in Series 741 and 743 sludge in spherical form at optimum moderation.

Type of Sludge Series	Radius of PuO_2 and Sludge (cm)	Mass of Plutonium-239 Contained in Sphere (g)	H/Pu Ratio of System	$k_{eff} + 2\sigma$
741	25	1,500	636.4	0.890
743	15	1,500	208.6	0.707

k_{eff} = effective multiplication factor

As shown by results given in Table 3, the system will remain subcritical with a fissile loading of 2.7 and 3.6 kg of Pu-239 for Series 741 and 743 sludge, respectively. The fissile material was distributed throughout a single drum in a homogeneous manner.

As shown by results in Table 4, a model containing 1,500 g of Pu-239 is subcritical in an optimum geometry at optimum moderation within the specific matrix and full reflection around the system. These results show that it is not credible that a criticality event associated with the Series 741 and 743 sludge matrix could occur for the expected fissile masses.

Composition of the Series 742 sludge is given in Sentieri (2003b), which shows it is very similar to Series 741 sludge (Schuman and Tallman 1981). Therefore, similar results are expected for Series 742 sludge.

Series 744 sludge consists of special setups from operations that did not have a direct feed into the waste-processing buildings or the waste produced from special operations that were not chemically compatible with the waste process stream in RFP Building 774 (INEEL 2003). The liquids included mostly complexing agents, strong acids, and strong bases. The liquids were transferred in polyethylene bottles to a glovebox. The liquid then was transferred to a tank where acid waste was neutralized. Basic solution was left untreated. A mixture of approximately 93–112 kg of Portland cement and 37–56 kg of

insulation cement was combined with 80–100 L (21–26 gal) of basic waste or neutralized liquid in a 55-gal drum. The drum was then placed onto a drum roller for mixing.

The combination of 80–100 L (21–26 gal) of Series 744 waste solution with the two types of cement would yield compositions similar to those modeled for the Series 741 and 743 sludge. Similar fissile masses would be safe for the Series 744 sludge composition as those shown safe for Series 741 and 743 types of sludge. Therefore, the Series 744 sludge does not present any criticality concerns.

Series 745 sludge consisted of evaporator salts. The low fissile mass, low hydrogen content because of the low moisture content, and chemical composition of this sludge type indicate this sludge matrix will be less reactive than those previously evaluated. No criticality concerns associated with this sludge form have been identified.

6.3.7.2 Graphite. Discussions with past RFP operational personnel indicate that the graphite waste matrix could contain a higher fissile loading than most of the other waste forms. Previous CSEs (Sentieri 2003a; Sentieri 2003b) evaluated the fissile mass associated with graphite that would be necessary to postulate an unsafe condition.

Calculational models evaluated in Sentieri (2003a) demonstrate that a large fissile mass is necessary to achieve an unsafe condition in a graphite waste system. Sentieri (2003a) demonstrated that a spherical system of 1,000 g of weapons-grade plutonium, in the form of plutonium oxide combined with water and graphite, would remain safely subcritical. It is conservative to assume that the system contains 1,000 g of plutonium. The amount of water present corresponds to the void volume fraction of the system. This volume fraction was modeled from 10 to 40%, with 40% being the most conservative. This value was chosen as the limit for the volume fraction because volume fractions beyond this level begin to encroach on solution systems. Such systems are not credible for the waste forms and chemical compositions expected. The system was fully reflected with fully saturated soil, thus decreasing neutron leakage.

These calculational models are extremely conservative yet still yield subcritical systems. It is extremely unlikely that such a large fissile mass is present in the area. However, if such a mass were present, it would need to be fully moderated and distributed in near-idealized, unrealistic conditions to achieve an unsafe condition.

6.3.7.3 Intact HEPA Filters, HEPA Filter Media, and Material Not Distinguishable from HEPA Filter Media. Historical RFP process knowledge leads to the conclusion that this waste form (i.e., high-efficiency particulate air [HEPA] filter, filter media, and material not distinguishable from HEPA filter media) could have a higher fissile loading than other waste matrices. Historical data indicate that filters are expected in the waste retrieval area within the designated area of Pit 4.

The physical nature of filter media and intact filters lends itself to more optimal conditions (unless the filter media or intact filter is compressed or degraded) with regard to creating a critical configuration. This waste form consists of material with a low physical density (excluding the plutonium), a high void-volume fraction, and a more homogenous distribution of fissile material.

The combination of these factors makes uncompacted, collocated filters more reactive than other waste forms. Waste disposal methods in some cases (e.g., drums dumped into the pit and smashed with a bulldozer), observed subsidence events, and probehole data lead to the conclusion that finding a large cache of intact HEPA filters is unlikely. Factors that would introduce soil into voids within the filters include (1) degradation of waste packages containing the filters, (2) disposal methods, and (3) subsidence.

Even if intact HEPA filters do exist, they would not be in the contrived, orderly arrangement that would lead to unsafe conditions.

Filters and filter media do not pose a criticality concern based on the following reasons:

- A control limiting the disturbance of waste in the presence of an unsafe amount of moderating material will be implemented
- Only gross segregation of waste types is occurring; therefore, the filters and filter media will be interspersed with diluent and absorber material
- The reactive nature of intact filters and filter media depends heavily on optimal moderation and geometry, and this optimized geometry and moderation is not credible for ARP.

6.3.8 Fissile Material Amounts Necessary in Nontargeted Waste Forms to Postulate Unsafe Conditions

The following subsections discuss the unrealistic quantities of fissile material and ordered geometrical arrangements in the various NTW forms necessary to achieve an unsafe condition.

6.3.8.1 Soil. During the retrieval operation, waste material will be sorted into targeted waste and NTW. Soil will be interspersed within both of these waste forms because of the nature of the retrieval process and the use of the Gradall excavator to perform retrieval from the pit.

The Sentieri (2003b) CSE modeled homogeneous mixtures of soil (Callow et al. 1991) and fissile material. Computational models were developed to determine the fissile mass necessary to create an unsafe condition within a soil matrix. The same approach used in the sludge models was used for the soil. The first approach evaluated soil containing various concentrations of Pu-239 in the form of PuO_2 distributed homogeneously through a fully loaded soil waste drum. The soil was conservatively modeled with 40% volume fraction within the soil filled with water, which corresponds to fully saturated soil. The model assumed full reflection around the entire drum with saturated soil. The system showed that it would remain subcritical with a fissile loading of 2.3 kg of Pu-239 mass in a volume equivalent to a single drum. This model assumed the fissile material was distributed through the drum in a homogeneous manner. In reality, waste in the pits and trenches will be intermixed with interstitial soil.

Another model was evaluated where PuO_2 was distributed in a system of soil in the form of a sphere. For this model, 1,500 g of Pu-239, in the form of PuO_2, was distributed within the saturated soil material over increasing volumes within a sphere. The radius of the system (fissile material and soil) was increased to determine the point of optimum moderation. The previous set of cases evaluated fissile concentration over a set volume. This model evaluates a constant fissile mass over a varied concentration by increasing the volume over which the fissile material is distributed. The sphere of plutonium and saturated soil mixture was fully reflected by saturated soil.

It was shown that the system is subcritical with a model containing 1,500 g of Pu-239 in an optimum geometry, at optimum moderation within the specific matrix, and at full reflection around the system. These results show it is not credible that a criticality event could occur within the soil matrix for the expected fissile masses.

6.3.8.2 Other Waste Matrices. Other waste matrices (e.g., drum remnants, metal pieces, PPE, and plastics used for contamination control purposes) historically had lower fissile loadings because of the nature in which these materials were used in the actual operations at RFP. Retrieval of these waste forms does not pose any unique criticality concerns.

Additionally, the OU 7-10 Project validated the assumption by demonstrating the lower fissile loadings associated with the waste matrices that have been categorized as NTW.

6.4 Process Areas

Processes associated with the ARP are separated into the following distinct areas:

- Operations in the Retrieval Enclosure
- Drum packaging system
- Lag storage
- Fissile assay monitor trailer and sample support trailer
- Interim waste storage arrays.

Each area and the associated criticality controls are discussed in more detail in the following sections.

6.4.1 Operations in the Retrieval Enclosure

Disturbing an overloaded waste package and creating an unfavorable configuration during the excavation and retrieval process are unlikely but cannot be deemed incredible. Process knowledge, archived retrieval reports, visual probes, and results from the OU 7-10 Project indicate that waste containers are in various stages of deterioration. Integrity of the containers may range from being completely disintegrated to structurally sound. Changing the waste environment (i.e., excavating and retrieving the waste) may optimize the fissile mass density, increase moderation, or create a more favorable geometry for a criticality hazard. Changing one or all of these criticality parameters may increase reactivity at the waste retrieval surface.

The nature of the waste configuration limits the controls that can be set. Moderator controls can be implemented during retrieval operations. Moderating material in amounts sufficient to create a near-optimally moderated system would be necessary to postulate a critical configuration. Moderator could be introduced into the system during the waste retrieval process. The introduction of moderating material in an unsafe amount would be required in addition to disturbance of an unsafe amount of fissile material to create an unsafe configuration. However, even in the presence of an unsafe fissile mass with moderator, creating the near-optimum conditions required to form a critical system is extremely unlikely.

It is expected that any plutonium metal pieces originally discarded as waste have since been oxidized. The oxide form of plutonium is PuO_2, which has a very low solubility in water. To achieve a critical system with the minimum mass of Pu-239 in the form of PuO_2, the system must be optimally moderated. The closer the system is to the optimum moderation range, the closer it is to the minimum critical mass. A single parameter limit for volume is given in “Nuclear Criticality Safety in Operations with Fissionable Materials Outside Reactors”(ANSI/ANS-8.1-1998) for systems comprising plutonium nitrate where the Pu-240 is greater than or equal to 5 wt%. This limit is given as 10 L (2.6 gal). This

volume takes credit for the nitrate, which is a mild neutron absorber. This value is conservative to use as a volumetric limit for ARP, even though the expected fissile material form within the retrieval area is PuO_2. Theoretically, a critical configuration could be formed with a slightly smaller amount of liquid when combined with PuO_2 as opposed to $Pu[NO_3]_4$. Using the volumetric limit associated with plutonium nitrate is conservative because of the (1) nonhomogeneity or actual diluteness of the PuO_2 throughout the expected waste matrices, (2) many other mild neutronic absorbers and diluents (e.g., soil) within the waste would be mixed with the plutonium, and (3) the actual configuration of the PuO_2 in the retrieval area is not in an ordered, geometrical configuration. For this analysis, the ideal volumetric limit can be applied as the amount that constitutes an unsafe amount of moderating material (i.e., free liquid) in the system. The systems evaluated in this CSE consist mainly of PuO_2 combined with various matrices including water. It should be noted that a larger volume of free liquid could be shown to be safe, depending on the configuration of the system. For example, the subcritical limit height for a fully reflected infinite slab of $PuNO_3$ solution is given as 2.6 in. (ANSI/ANS-8.1-1998), where the Pu-240 is greater than or equal to 5 wt%. Therefore, if the configuration of the solution is a slab no higher than 2.6 in., an infinite volume would be critically safe. In addition, the 10-L (2.6-gal) limit is based on an optimum spherical geometry. Other less-reactive geometries would require larger volumes.

A critical system can be formed with dry oxide material, but the fissile mass necessary to achieve a criticality is quite large. The subcritical limit for PuO_2 systems that contain no more than 1.5 wt% water is given as 11.5 kg of PuO_2 containing 10.2 kg of the fissile isotope Pu-239 (LANL 1996). In dry systems consisting of larger fissile masses (e.g., very near the critical limit), a small amount of moderating material could cause the system to go from safe to an unsafe condition. The expected lower localized fissile masses in the operation indicate that a larger volume of moderating material would be necessary to achieve an unsafe condition. The volumetric limit of 10 L (2.6 gal) also assumes optimum geometry, optimum homogeneous concentration, and full water reflection. The first two conditions are idealized and will not be encountered in this retrieval operation. Additionally, the close-fitting, full water reflector around the system is also conservative.

Criticality prevention during waste retrieval will use administrative controls that prohibit operations while an unsafe amount of moderator is present. With this control, which stops operations when an unsafe quantity of moderator is present, formation of a criticality hazard is deemed beyond extremely unlikely.

Adding water to the waste forms does not pose a criticality hazard for existing material in its current configuration because of the form and distribution of fissile material and the presence of diluents (Sentieri 2003a). Sentieri (2003a) demonstrates that, with idealized conditions, criticality is possible with much less than a kilogram of plutonium. However, as one realistically incorporates the negative reactivity effects of nonhomogeneity, lack of optimal moderation, lack of optimal geometry, lack of optimum reflection, and the inclusion or insertion of diluent (e.g., soil and the inherent waste form), the plutonium mass required for criticality increases significantly. These less-than-optimal but actual conditions would be subcritical if several kilograms of plutonium were present.

Moderating material is controlled but not excluded within the Retrieval Enclosure. Addition of moderator can increase reactivity but will not in itself result in a criticality. The introduction of moderator may occur because of the following:

- Firefighting activities in the Retrieval Enclosure allow introduction of water
- Unknown moderating material is discovered in the retrieval process
- Equipment failure or other mechanisms introduce moderating materials.

Introduction of moderating material while an unsafe amount of fissile material is present is possible during excavation operations. A control can be implemented that prohibits excavation operations (i.e., disturbance of the waste) in the presence of an unsafe amount of free liquid. Operational plans call for the use of overburden soil to absorb any free liquids in excess of the stated limits. Movement of the overburden soil does not constitute excavation operations in the context of disturbing the waste. If the moderator is less than 2.6 in. deep, the system will remain safely subcritical. This limitation will prevent the creation of an unfavorable geometrical configuration and the creation of a more homogenous mixture of fissile and moderating material. This limit also aids in addressing the use of dust-suppression material. Dust-suppression material (e.g., a water mist or low-density foam) can be used in such a manner that the free-liquid limit is not exceeded. For example, spraying the waste with a small quantity of water should not exceed the established limit; however, if a failure occurs, the control preventing the disturbance of the waste in the presence of an unsafe amount of free liquid prevents the scenario. If more than 10 L (2.6 gal) of free liquid is deeper than 2.6 in., resulting from the dust-abatement process, all waste-handling operations will stop, and the free liquid will be absorbed before waste-handling operations are continued.

Fires that originate in the retrieval digface area may be fought by normal water-introduction methods, compressed air foam, a dry chemical system, or covering with soil. Introduction of water through a high-pressure water system could disturb fissile material that is intermingled within the exposed waste matrices. Introduction of water with such high pressure would likely disperse the fissile material rather than combine the fissile material and water in the required near-optimum geometrical configurations to create an unsafe condition. The exposed waste seam will not be confined to a small area, and therefore, dispersion is more likely.

This same reasoning can be extended to targeted waste matrices housed in targeted waste trays within the Retrieval Enclosure. High-pressure water would likely disperse the material from the waste tray, and the tray would not provide a system that would readily house a near-optimal configuration of fissile material and water. The shallow construction of the targeted waste tray (i.e., currently designed to be 8 in. deep) would not provide a container to effectively combine water and fissile material in an optimum slurry (i.e., created by the motive force of water from firefighting efforts). A transfer cart similar to the targeted waste tray was evaluated for the OU 7-10 Project (Sentieri 2003b). The transfer cart used in the OU 7-10 Project glovebox was 7 in. deep, 42 in. long, and 30 in. wide; however, the dimensions were evaluated as 8 in. deep, 60 in. long, and 50 in. wide. Cases were evaluated for the OU 7-10 Project transfer cart that considered various concentrations of plutonium dispersed homogeneously over the entire volume of the cart in saturated soil or water. As expected, the PuO_2 and water systems were more reactive. At a concentration of 15 g/L of PuO_2 dispersed homogeneously in water over the entire volume of the cart, the calculated $k_{eff} + 2\sigma = 0.945$. The fissile mass associated with this case was 5,108 g of Pu-239. This case is applicable to the targeted waste trays and shows the unrealistically large fissile mass necessary to postulate an unsafe condition. It should be noted that the tray height is the dimension of importance from a criticality safety standpoint but not so important that a slight increase in the height would invalidate this argument. At some height, the tray would provide a functional container for the creation of a plutonium and water slurry in the case of firefighting activities. However, even at these heights, the other factors affecting criticality (e.g., fissile mass present, geometry, reflection, and the lack of diluent or absorber material) would factor into whether or not an unsafe condition could realistically occur. Any substantial increase in depth of the targeted waste tray would warrant further evaluation.

As described previously, some NTW will be staged in freestanding waste bags within the Retrieval Enclosure. As validated by analysis of the results from the waste removed during the OU 7-10 Project, the fissile loading in the NTW matrices should be much lower than that for the targeted waste matrices. Additionally, because of the retrieval method, considerable interstitial soil will be included within the NTW matrices. Therefore, if water were introduced (by firefighting efforts) into freestanding waste bags containing NTW within the Retrieval Enclosure, an unsafe condition would not occur. This is because of

the lower fissile mass in the nontargeted matrices along with other factors necessary to postulate an unsafe condition (e.g., geometry, concentration, and lack of diluent or absorber material, optimal geometry, and optimal reflection). Additionally, soil within the NTW would prevent a plutonium and water slurry from being created within an NTW bag.

If a fire were to occur within a freestanding NTW bag, the bag itself would burn or melt and not retain liquid from firefighting efforts. Soil will be intermixed with the NTW, thus increasing the fissile mass necessary, even with introduction of firefighting water, to create an unsafe condition. The freestanding NTW bags will be used only during creation of the initial trench, and the full bags will be returned to the pit as fill material once construction of the moving trench is underway. Therefore, no firefighting restrictions will be imposed on fires within or near the NTW containers.

Additionally, there is no mechanism to accumulate or preferentially concentrate fissile material in the waste retrieval area. Small masses of fissile material may become airborne and accumulate with other nonfissile dust particles on the filters. Fissile accumulation on filters is not anticipated to pose a criticality hazard because no mechanism is in place to preferentially concentrate only plutonium particles on the filters in a significant quantity.

6.4.2 Drum Packaging System

As described previously, the DPSs will be used to examine the waste and load the waste into the targeted waste drums. A total of six DPSs (two sets of three) will be used in the project. The DPSs are separated from each other by a distance of approximately 5 ft with a separation distance between the two groupings of approximately 7 ft. The process involves transferring a targeted waste tray into the sorting section of the DPS. The targeted waste will be examined to determine whether any items not acceptable for disposal at WIPP are present. Once this is completed, the liner housing the targeted waste material will be lifted by a hoist and placed into the drum. The targeted waste consists of graphite, intact filters and filter media, uranium, and Series 741 and 743 sludge. These waste matrices have been targeted because it is expected that these waste forms have a higher TRU content. In the case of sludge, the TRU content is driven by americium; in the case of the filters and graphite, the TRU content is determined by plutonium.

A control will be implemented that will restrict firefighting activities in the DPSs to the use of compressed air foam or dry chemical systems. Compressed air foam firefighting materials use a combination of chemical foam, water, and compressed air to create foam that has the general consistency of shaving cream and adheres to surfaces to suppress and prevent the spread of fire. Typical compressed air foams have an expansion ratio ranging from 6:1 to 12:1, which results in expanded foam with a water density of approximately 5–10% (0.05 to 0.10 g/cm^3).[c] The low density of the foam does not provide the motive force to effectively mix fissile material and water in the confined space of the unassayed targeted waste drum. Additionally, because the compressed air foam has a relatively low water density after expansion, introducing the foam into the waste will result in a minimum critical mass much larger than that associated with the full density water. The resulting system will be closer to a dry system than to a flooded system.

Additionally, the targeted waste will be inspected for both contained and free liquids before being placed in a drum. The WIPP acceptance criterion prohibits contained and residual liquids in any drum being brought to WIPP. The total residual liquids in any payload container (e.g., 55-gal drum or standard waste box) shall not exceed 1% by volume of that container (DOE-WIPP 2004). A second control will be

---

c. EDF-4383, 2003, "CPP-602 Fire Fighting Restrictions for Denitrator Repackaging," Rev. 0, Idaho National Engineering and Environmental Laboratory.

implemented in the DPS that prohibits disturbance of waste material in the presence of greater than 2.6 gal of free liquid in a configuration deeper than 2.6 in. Implementation of this second control will prevent an unsafe amount of fissile material from being actively mixed with a large amount of moderator and creating a system with an increased reactivity.

A third control associated with the DPS requires that drums of unassayed targeted waste be closed and remain closed when outside of the DPS to prevent introduction of a moderator.

6.4.3 Waste Package Lag Storage Areas

Before assaying, drums will be stored in lag storage. Once the drum lids have been placed on the drums, the locking rings have been attached, and decontamination has been performed, if necessary, the drums will be removed from the DPS. The drums will be ready to be transported to lag storage. The unassayed drums will be required to be stored in lag storage in a single planar array with an edge-to-edge spacing of 16 in. or greater between the drums and from other fissile material. This is the current storage requirement for drums at the RWMC containing greater than 380 g FGE and less than 1,500 g FGE. This edge-to-edge spacing also will apply to closed drums that have been removed from the DPS before placement in lag storage.

Additionally, all drums shall remain closed (with lids in place) when outside of the DPS before fissile assay because there is no firefighting restriction in the lag storage area.

6.4.4 Fissile Assay Monitor Trailer and Sample Support Trailer

The fissile assay monitor trailer will be used to measure the fissile content of the waste packages. The same restrictions and controls for waste packages imposed in lag storage and outside the DPS will be applicable to the fissile assay monitor trailer until the drums of targeted waste are assayed.

The current field sampling plan[d] calls for collection of a small amount of materials to accomplish confirmatory analyses relating to applicable characterization requirements. The sample sizes will range in size from approximately 20 mL to approximately 250 mL. Sampling of the waste material will occur in the DPS. Samples taken from the waste material will be assayed for fissile content in a relocated Glovebox Excavator Method Project fissile material monitor within the sample support trailer before transportation to analytical laboratory facilities. The purpose of assaying is to ensure compliance with the applicable transportation requirement, which limits a package to no more than 15 g of fissile material. Types of waste matrices being sampled (e.g., soil and sludge), along with expected amounts of fissile material in samples and the fact that all samples are being fissile monitored before transportation, lead to the conclusion that no credible criticality scenarios exist relating to these samples.

6.4.5 Waste Package Interim Storage Arrays

All drums of targeted waste will be fissile assayed before being placed in a final storage area. Drums in a close-packed array (no spacing) shall be loaded to no more than 380 g FGE, including measurement uncertainty (one standard deviation).

---

d. Arbon, R. E., J. J. Einerson, and W. D. St. Michel, 2004, "WIPP/RCRA Field Sampling Plan for the Accelerated Retrieval Project for a Described Area within Pit 4 (Draft)," ICP/EXT-04-00329, Rev 0A, Idaho Completion Project.

Drums of targeted waste that have been assayed and confirmed to meet the fissile loading of no more than 200 g FGE will remain safely subcritical in any size array of drums. Drums of targeted waste that have been assayed and have greater than 200 g FGE and no more than 380 g FGE may be stored in an array consisting of a total of 500 drums not exceeding five drums high.[e]

If, after assaying, the container-fissile-loading limit requirements are not met, the waste storage containers will be stored in lag storage or isolated depending on the assay FGE amount. Lag storage requirements and controls for drums containing greater than 380 g FGE and no more than 1,500 g FGE of Pu-239 will be spaced as previously discussed. These drums shall be stored in a single planar array with an edge-to-edge spacing of 16 in. or greater between the drums and any other fissile material. Drums containing over 1,500 g FGE shall be isolated from other drums and all other fissile material by a minimum of 6 ft. Violation of these spacing limits will not result in a criticality, but adherence to them will provide a reduction in reactivity because of the decrease in neutronic interaction between the units.

Additionally, drums that contain over 380 g FGE shall be overpacked to preclude water intrusion if the integrity of the drum is questionable. Because new drums with very good integrity are being used for the targeted waste, it is not expected that this requirement will need to be imposed.

The HEPA filters, generated from the ARP process (air filtration system), will be managed as secondary waste as part of the overall Comprehensive Environmental Response, Compensation, and Liability Act waste management program. Based on characterization information, waste streams will be evaluated for the proper disposal path.

6.4.6 Criticality Alarm System

"Facility Safety" (DOE O 420.1A) requires the following:

> The nuclear criticality safety program shall be evaluated and documented and shall include an assessment of the need for criticality accident detection devices and alarm systems, and installation of such equipment where total risk to personnel will be reduced.

The ARP has been evaluated, and it has been determined that the nature of the waste, the retrieval process itself, and the implemented controls reduce the likelihood of a criticality to beyond extremely unlikely. Therefore, a criticality alarm system will not be required for this operation.

---

e. Nielsen, Joseph W., 2002, *Criticality Safety Evaluation for Finite Arrays of Drums Containing up to 380 g of Pu-239 RWMC*, INEEL/INT-02-00973, Idaho National Engineering and Environmental Laboratory.

7. DESIGN FEATURES AND ADMINISTRATIVELY CONTROLLED LIMITS AND REQUIREMENTS

The following engineering and administrative controls are identified in this CSE. The criticality safety program requires these controls during ARP operations. Additionally, the important assumptions used in the analysis are listed below:

- Targeted waste can be distinguished from NTW at the digface.
- The inside height of the targeted waste tray is configured at 8 in. This height was an assumption used in this evaluation to determine no firefighting restrictions are required for the targeted waste trays. Changes to the height of the targeted waste tray will require further evaluation by criticality safety.

7.1 Engineering Controls

There are no engineering controls associated with criticality for the ARP.

7.2 Administrative Controls

This CSE provides administrative criticality controls for the safe removal, handling, and storage of fissile material. These controls ensure favorable geometry, moderator controls, and mass controls that will reduce the likelihood for a criticality accident. Administrative controls for the project are discussed in the following subsections.

7.2.1 Operations in the Presence of Free Liquid

If an unsafe amount of liquid (i.e., more than 10 L [2.6 gal] of free liquid in a configuration deeper than 2.6 in.) is encountered during retrieval or packaging operations, then all disturbance of waste material in the area of the discovery will be prohibited. If the solution is less than 2.6 in. deep, then the system will remain safely subcritical. Operations within the area of discovery may resume after the free liquids have been absorbed to less than the limits above.

7.2.2 Firefighting Restrictions in Drum Packaging Station

Compressed air foam or dry chemical systems will be used in the event of fire-incident response for a fire occurring in the DPS. Using compressed air foam or a dry chemical system will reduce the likelihood of creating an unsafe condition within the confines of a targeted waste drum.

7.2.3 Lids on Drums

All drums of targeted waste shall remain closed (with their lids in place) when outside of the DPS.

7.2.4 Lag Storage of Waste Drums

Unassayed drums outside of the DPS will be stored in lag storage in a single planar array with an edge-to-edge spacing of 16 in. or greater between drums and from other fissile material.

7.2.5 Storage of Assayed Waste Drums

Assayed waste drums will meet the following storage criteria:

- Assayed drums containing no more than 200 g FGE may be stored in any sized array
- Assayed drums containing 380 g FGE or less may be stored in a 500-drum array not to exceed five drums high.

7.2.6 Storage of Overloaded Drums

If, after assaying, the container-fissile-loading limits are not met, then the waste storage containers will be stored as follows pending disposition:

- Drums containing greater than 380 g FGE and no more than 1,500 g FGE shall be stored in a single planar array with an edge-to-edge spacing of 16 in. or greater between the drums and any other fissile material.
- Drums containing over 1,500 g FGE shall be isolated from other drums and all other fissile material by a minimum of 6 ft.
- In addition, drums that contain over 380 g FGE shall be overpacked to preclude water intrusion if the integrity of the drum is questionable. Because new drums with very good integrity are being used for the targeted waste, imposition of this requirement should not be needed.

8. SUMMARY AND CONCLUSIONS

This CSE analyzed the criticality potential during the ARP and developed the necessary associated controls to prevent criticality. Criticality potential in the waste retrieval area, drum packaging area, and the waste-package-storage area was evaluated. The probability of criticality without controls has been deemed extremely unlikely because of the expected forms of waste in which the fissile materials are distributed. In addition, achieving a critical system is physically impossible without the presence of sufficient free liquid. Controls will be implemented to prohibit operations in the presence of an unsafe amount of free liquid. An unsafe amount of liquid is defined as more than 10 L (2.6 gal) of free liquid in a configuration deeper than 2.6 in. If the solution is less than 2.6 in. deep, the system will remain safely subcritical. Additional controls relating to firefighting activities within the DPS also will be implemented. These requirements will limit firefighting activities to use either compressed air foam or a dry chemical system when fighting fires that occur in the drum packaging area.

Drums outside the DPS will be required to remain closed. Spacing controls will be implemented relating to movement and placement into lag storage of unassayed drums. Assayed drums will be limited to container-fissile-loading limits. This will ensure a safe storage configuration. To ensure safety, controls will be implemented in the event that an overloaded drum is discovered after fissile assaying.

The nature of the waste with the implementation of these controls ensures that the likelihood of a criticality occurring is beyond extremely unlikely. Therefore, in accordance with “Facility Safety” (DOE O 420.1A), a criticality alarm system will not be required for this operation. It should be noted that the DPS will be covered by radiation alarm monitors and constant air monitors to provide personnel protection.

9. REFERENCES

ANSI/ANS-8.1-1998, 1998, "Nuclear Criticality Safety in Operations with Fissionable Materials Outside Reactors," American National Standards Institute/American Nuclear Society.

Callow, R. A., L. E. Thompson, J. R. Weidner, C. A. Loehr, B. P. McGrail, and S. O. Bates, 1991, *In Situ Vitrification Application to Buried Waste Final Report of Intermediate Field Tests at Idaho National Engineering Laboratory*, EGG WTD-9807, Idaho National Engineering and Environmental Laboratory.

DOE O 420.1A, 2002, "Facility Safety," U.S. Department of Energy.

DOE-WIPP, 2004, *Contact-Handled Transuranic Waste Acceptance Criteria for the Waste Isolation Pilot Plant*, DOE/WIPP-02-3122, Rev. 1, U.S. Department of Energy.

EDF-4478, 2004, "Waste Inventory of Area G in Pit 4 for the Accelerated Retrieval Project within the Radioactive Waste Management Complex," Rev. 1, Idaho Completion Project.

INEEL, 2003, *Acceptable Knowledge Document for INEEL Stored Transuranic Waste—Rocky Flats Plant Waste*, INEL-96/0280, Rev. 3, Idaho National Engineering and Environmental Laboratory.

LANL, 1996, "Nuclear Criticality Safety Guide," A-12808, UC-714, Los Alamos National Laboratory.

Preussner, Brian, Kirt Jamison, Matt Allred, Alan Yonk, and Bert Lilburn, 2004, *Excavation Plan and Sequential Process Narrative for the Accelerated Retrieval Project for a Described Area within Pit 4*, ICP/EXT-04-00283, Rev 0, Idaho Completion Project.

RSIC, 1997, "MCNP4-A General Monte Carlo N-Particle Transport Code, Version 4B," CCC-660/MCNP4B2, Radiation Shielding Information Center (contributed by Los Alamos National Laboratory), Oak Ridge National Laboratory.

Schuman, R. P. and R. L. Tallman, 1981, *Properties and Simulation of Rocky Flats Waste Sludges*, RE-M-81-011, Idaho National Engineering and Environmental Laboratory.

Sentieri, Paul J., 2003a, *Criticality Safety Study of the Subsurface Disposal Area for Operable Unit 7-13/14*, INEEL/EXT-01-01294, Rev. 1, Idaho National Engineering and Environmental Laboratory.

Sentieri, Paul J., 2003b, *Criticality Safety Evaluation for the OU 7-10 Glovebox Excavator Method Project*, INEEL/EXT-01-01617, Rev. 5, Idaho National Engineering and Environmental Laboratory.

SPC-417, 2003, "Mobile Non-Destructive Assay Trailer for the OU 7-10 Glovebox Excavator Method Project," Rev. 1, Idaho National Engineering and Environmental Laboratory.