Appendix F–2

Revised Phase I Design Drawings
(SPC-458)

(623728–623765)

REVISIONS		
REV	DESCRIPTION	EFFECTIVE DATE:

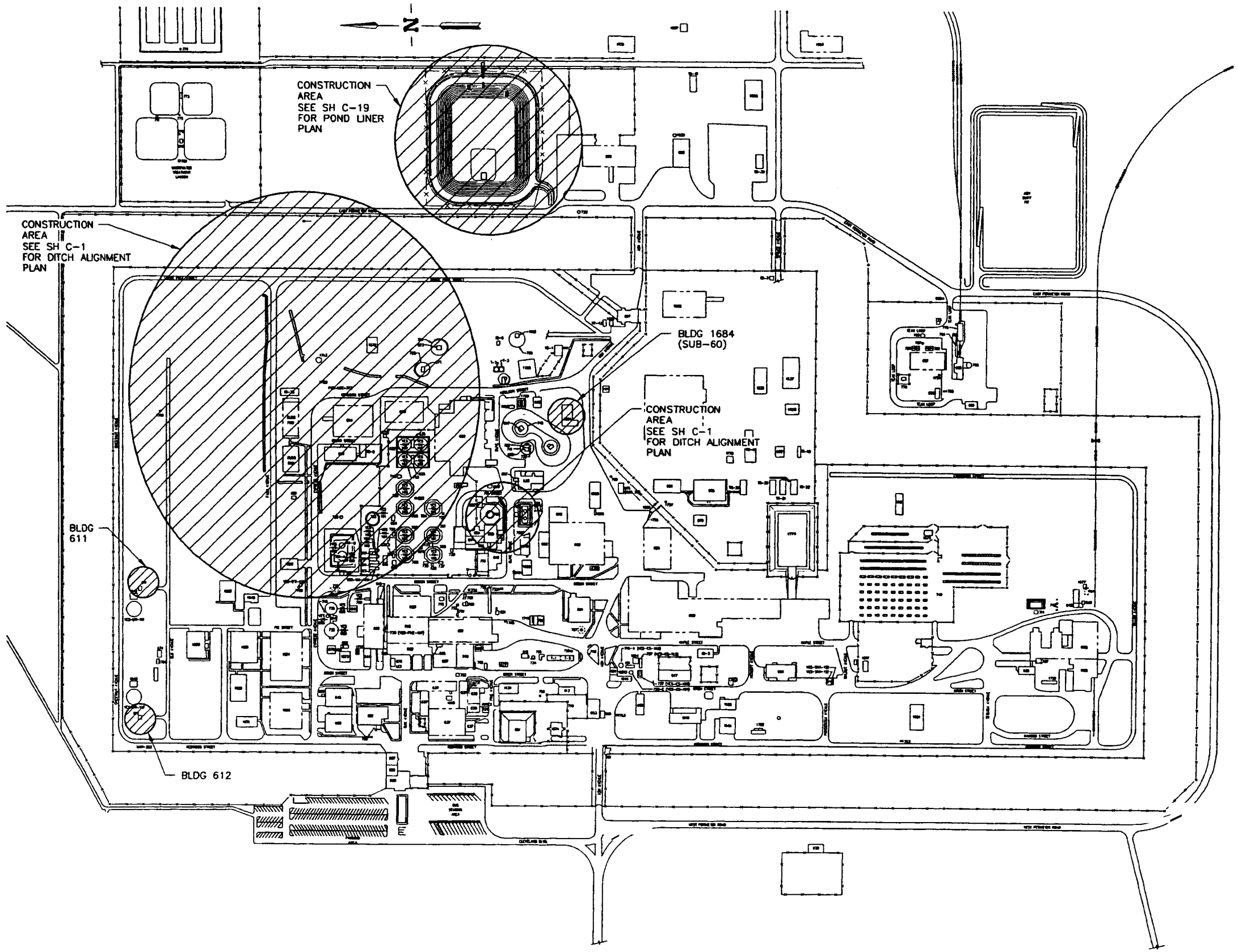

INTEC AREA MAP

SCALE: 1"=200.0'

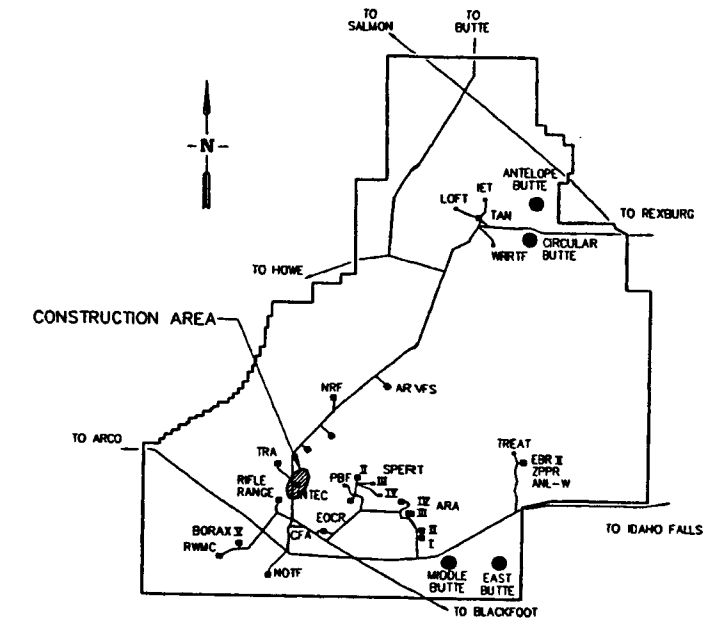

SITE MAP

SCALE: NONE

FOR DRAWING INDEX SEE DRAWING NO. 623729	SUBCONTRACT NO. N/A	INEEL (Idaho National Engineering & Environmental Laboratory) BECHTEL BWXT IDAHO, LLC
200' 100' 50' 0 200' SCALE: 1" = 200.0'	REQUESTER: LEE DAVISON DESIGN: KURT FRITZ DRAWN: ROB HERGESHEIMER PROJECT NO. 020978 SPCL CODE	INEEL OU 3-13 GROUP 1 TANK FARM INTERIM ACTION PHASE 1 SITE MAP AND AREA MAP
DESIGN PHASE: AFC	FOR REVIEW/APPROVAL SIGNATURES SFE DAR NO. 100611	SIZE D · CAGE CODE 01MF3 · INDEX CODE NUMBER: AREA 200, TYPE 0100, G 38, ORG 090 · DWG-623728 · REV
SAFETY CATEGORY: CG	EFFECTIVE DATE: 4/11/03	SCALE: NOTED · SHEET T-1

File: 623728.dwg ID: Layout Name: Layout1
Path: G:\rdh5\new-phase\ DATE: 04/11/03 - 11:11 A.M.

REVISIONS		
REV	DESCRIPTION	EFFECTIVE DATE
2	SEE DAR-101498	5/14/05

DRAWING INDEX

PAGE NO.	DWG NO.	A-E DWG NO.	REV	DRAWING TITLE
1	623728	T-1		SITE MAP AND AREA MAP
2	623729	T-2	2	DRAWING INDEX
3	623730	T-3		LEGEND, ABBREVIATIONS AND GENERAL NOTES
4	623731	C-1	1	ALIGNMENT PLAN
5	623732	C-2		ALIGNMENT 2 PLAN
6	623733	C-3		ALIGNMENT 3 PLAN
7	623734	C-4		ALIGNMENT 4 PLAN
8	623735	C-5		ALIGNMENT 6 PLAN
9	623736	C-6		AUGNMENT 7 PLAN
10	623737	C-7		WGNMENT 8 PLAN
11	623738	C-8		AUGNMENT 2 PROFILE
12	623739	C-9		ALIGNMENT 3 PROFILE
13	623740	C-10		ALIGNMENT 4 PROFILE
14	623741	C-11		ALIGNMENT 6 PROFILE
15	623742	C-12		ALIGNMENT 7 PROFILE
16	623743	C-13		AUGNMENT 8 PROFILE
17	623744	C-14		DITCH DETAILS
18	623745	C-15		HEADWALL AND ENDWALL DETAILS AND SECTIONS
19	623746	C-16		HEADWALL DETAIL AND SECTIONS
20	623747	C-17		HEADWALL DETAIL AND SECTIONS
21	623740	C-18		MANHOLE AND MISC. DETAILS AND SECTIONS
22	623749	C-19		EVAPORATION POND CPP-1793 LINER PLAN
23	623750	C-20		EVAPORATION PONO SECTIONS
24	623751	C-21		EVAPORATION POND SECTIONS AND DETAILS
25	623752	C-22		EVAPORATION PONO DETAILS
26	623753	C-23	1	EVAPORATION PONO SECTIONS AND DETAILS
	623754	C-24		EVAPORATION PONO SECTION, VIEWS AND DETAILS
28	623755	C-25		PAVING PLAN
	623756	C-26		PAVING PLAN
30	623757	C-27		ALIGNMENT 4 DUCT BANK MODIFICATION
31	623758	C-28		SECTION AND DETAIL
32	623759	E-1		PARTIAL ELECTRICAL PLAN
33	623760	E-2		PCC-CW2-1085 ONE LINE DIGRAM
34	623761	E-3		MOUNTING RACK VIEW
35	623762	E-4		VIEW, DETAILS AND SECTION

DRAWING INDEX

PAGE NO.	DWG NO.	A-E DWG NO.	REV	DRAWING TITLE
36	623763	E-5		P-UTI-670 AND P-UTI-671 TEMPORARY FEED INSTALLATION
37	623764	E-6		P-UTI-670 AND P-UTI-671 PERMANENT FEED INSTALLATION
38	623765	E-7		PUMP HOUSE PLANS

REFERENCE DRAWINGS

-	105249	-	7	CPP-1604 MISTERS AND DRAY ONE LINE DIAGRAM SHEET 1

FOR DRAWING INDEX SEE DRAWING NO. 623729	SUBCONTRACT NO. N/A	INEEL
NO SCALE	REQUESTER: LEE DAVISON DESIGN: KURT FRITZ DRAWN: ROB HERGESHEIMER PROJECT NO. 020978 SPEC. CODE	INEEL OU 3-13 GROUP 1 TANK FARM INTERIM ACTION PHASE 1 DRAWING INDEX
DESIGN PHASE: AFC	FOR REVIEW/APPROVAL SIGNATURES SEE DAR NO. 100611	SIZE D · CAGE CODE 01MF3 · INDEX CODE NUMBER AREA 200 TYPE 9999 Q 01 ORIG 090 · DWG-623729 · REV 2
SAFETY CATEGORY: CG	EFFECTIVE DATE: 4/11/03	SCALE: NONE · SHEET T-2

File: 623729-2.dwg
path: P:\rdh5\rwe-phase1-ions\for rev

A	SECTION LETTER
A-1	A/E SHEET REFERENCE
A	VIEW OR ELEVATION LETTER
A-1	A/E SHEET REFERENCE
1	DETAIL NUMBER
—	SAME SHEET REFERENCE
6"WON-106108	EXISTING UNDERGROUND UTITILIES, SEE NOTE 16
	EXISTING ELECTRICAL OR TELEPHONE DUCT BANK
	EXISTING FIRE HYDRANT
	EXISTING PIV
	EXISTING GATE VALVE
	EXISTING POWER OR LIGHT POLE
	EXISTING ROADWAYS
	EXISTING BUILDINGS
	EXISTING SIDEWALKS
MAH-XX-XX-XXX	EXISTING MANHOLE NUMBER
	NEW ITEMS TO BE INSTALLED
+XX.XX	EXISTING ELEVATION
	NEW OR FINISHED ELEVATION
	SLOPE OR GRADE TO DRAIN

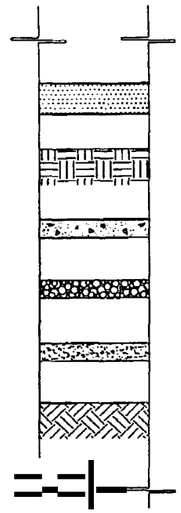

1. DRAWINGS IN MIS PACKAGE ARE BASED ON CURRENT "AS BUILT" UNDERGROUND UTILITIES AS SHOWN ON DRAWNG 055315 AS OF 12/97.
2. RETAIN AND PROTECT ALL EXISTING FACILITIES UNLESS OTHERWISE NOTED.
3. MANHOLES SHAU BE INSTALLED AT THE ELEVATION SHOW ON THE DRAWINGS. INSTALLATION OF MANHOLES SHAU BE FROM COORDINATES LISTED ON DRAWING. STATIONING OF MANHOLES IS DRAWNG SPECIFIC AND FOR REFERENCE ONLY.
4. CUT AND SPUCE A U CATHODIC AND ELECTRICAL CABLES IN ACCORDANCE WITH THE SPECIFICATIONS.
5. ALL UTILITIES EXPOSED DURING EXCAVATION ARE TO BE ADEQUATELY SUPPORTED BY SUBCONTRACTOR TO PREVENT DAMAGE DURING ALL PHASES OF CONSTRUCTION. INCLUDING BACKFILL.
6. SHORING MAY BE USED AT THE SUBCONTRACTORS' OPTION. SHORING, IF USED, IS TO BE DESIGNED AND ENGINEERED BY THE SUBCONTRACTOR. SEE EARTHWORK SECTION OF SPECIFICATION.
7. LOCATION AND ELEVATION SHOW FOR EXISTING UTILITIES ARE APPROXIMATE. SUBCONTRACTOR SHALL HAND EXCAVATE TO FIELD LOCATE INTERFERENCE'S AND PREVENT ANY DAMAGE DURING EXCAVATION. SEE SPEUAL CONDITIONS AND EARTHWORK SECTION OF SPECIFICATION.
8. LOCATOR RIBBON DISTURBED DURING EXCAVATION OVER EXISTING UTILITIES IS TO BE REPLACED DURING BACKFILL AND COMPACTION. ALL NEW UTILITIES ARE TO BE MARKED WITH LOCATOR RIBBON PER SPECIFICATION.
9. FOR ESTIMATING PURPOSES, REMOVAL AND SAW CUTTING OF ALL ASPHALT CONCRETE SURFACES ARE ASSUMED TO BE AN AVERAGE OF 4' THICK.
10. PRIOR TO BACKFILLING, ALL EXPOSED UNDERGROUND UTILITIES ARE TO BE LOCATED BY HORIZONTAL COORDINATES AND VERTICAL ELEVATION BASED ON INTEC HORIZONTAL DATUM AND NRTS VERTICAL DATUM AND RECORDED ON THE RED LINE DRAWINGS.
11. SUBCONTRACTOR SHAU REINSTALL ALL SIGNS REMOVED DURING CONSTRUCTION AT OR NEAR THE ORIGINAL POSITION AFTER CONSTRUCTION IS COMPLETE.
12. TEMPORARY TRAFFIC CONTROL SIGNS, BARRICADES, FLAGGING ETC. MAY BE REQUIRED TO PROPERLY CONTROL TRAFFIC DURING CONSTRUCTION. ALL SIGNING AND TRAFFIC CONTROL OPERATIONS SHALL COMPLY WITH THE CURRENT 'MANUAL ON UNIFORM TRAFFIC CONTROL DEVICES'.
13. WHERE SPLICING OF EXISTING CABLES IS REWIRED. CABLES SHALL BE PLACED BELOW NEW DITCHES AND CULVERTS, UNLESS THERE IS ROOM ON TOP TO MAINTAIN ADEQUATE COVER OMR CULMRTS.
14. IN THE EKNT THERE ARE CONFLICTS BETWEEN THE NEW CONCRETE DITCHES AND THE EXISTING FACILITIES. THE SUBCONTRACTOR MAY MAKE MINOR ADJUSTMENTS IN ALIGNMENT AND ELEVATION OF NEW DITCHES. ADJUSTMENTS SHALL BE PER CONTRACTORS APPROVAL.
15. HORIZONTAL COORDINATES ARE INTEC SITE SPECIFIC. VERTICAL DATUM IS NRTS. NRTS IS 0.35' HIGHER THAN INTEC MRTICAL DATUM.
16. EXISTING UTILITIES ARE SHOWN AND IDENTIFIED FOR INFORMATION ONLY. SPECIFIC LINE TYPE IDENTIFICATION WILL BE FURNISHED UPON REQUEST.
17. ALIGNMENT PROFILES IN THIS PACKAGE REPRESENT THE FLOW LINE ELEVATION AT THE CENTER OF THE DITCH

ABBREVIATIONS

AC	- ASPHALT CONCRETE
BLDG	- BUILDING
℄	- CENTERLINE
CLR	- CLEAR (COVER OVER REBAR)
CMP	- CORRUGATED METAL PIPE
CMPA	- CORRUGATED METAL PIPE (ARCH)
COMM	- COMMUNICATIONS DUCT BANK
CONC	- CONCRETE
CONT	- CONTINUOUS
CO	- CLEAN OUT
CS	- CARBON STEEL
CT	- CONDENSATE
CTR	- CENTER
CY	- CUBIC YARD
DB	- DUCT BANK
DIA. 0	- DIAMETER
DIP	- DUCTILE IRON PIPE
DP	- DEPTH
DWG	- DRAWNG
EA	- EACH
EF	- EACH FACE
EL	- ELEVATION
EQ SP	- EOUAUY SPACED
EW	- EACH WAY
EXIST.	- EXISTING
FH	- FIRE HMRANT
FIN. GRD	- FINISHED GRADE
FL	- FLOW LINE
FO	- FIBER OPTIC CABLE
FT	- FOOT/FEET
FW	- FIRE WATER
GFE	- GOVERNMENT FURNISHED EQUIPMENT
HDPE	- HIGH DENSITY POLYETHYLENE
HH	- HANDHOLE
HS	- HIGH PRESSURE STEAM
HORIZ	- HORIZONTAL
HYD	- HYDRANT
ID	- INTERNAL DIAMETER
INV	- INVERT
LC	- LOAD CENTER
LF	- LINEAR FOOT
LG	- LENGTH OR LONG
MAH	- MANHOLE
MATL	- MATERIAL
MAX	- MAXIMUM
MFR	- MANUFACTURE!?
MIN	- MINIMUM
NG	- NATIVE GRAML
NO.	- NUMBER
NRTS	- NAVAL REACTOR TESTING STATION
OC	- ON CENTER
OD	- OUTSIDE DIAMETER
PC	- POINT OF CURVE
PIV	- POST INDICATOR VALVE
PLCS	- PLACES
PT	- POINT OF TANGENT
PVC	- POLYVINYLCHLORIDE
R	- RADIUS
RC	- REINFORCED CONCRETE
REF	- REFERENCE
REQD	- REOUIRED
REV	- REVISION
RGS	- RIGID GALVANIZED STEEL
RP	- REFERENCE POINT
SCH/SCHED	- SCHEDULE
SEC	- SECTION
SH	- SHEET
SPEC	- SPECIFICATION
SST	- STAINLESS STEEL
STA	- STATION
STD	- STANDARD
SW	- SERVICE WASTE
THK	- THICK
TOC	- TOP OF CONCRETE
TOS	- TOP OF STEEL
TYP	- TYPICAL
UN	- UNLESS NOTED OTHERWISE
VERT	- VERTICAL
WQ	- SANITARY SEWER
X-REF	- EXTERNAL REFERENCE ORAWNG

PROFESSIONAL ENGINEER REGISTERED 9404 4/11/03 STATE OF IDAHO KURT D. FRITZ

FOR DRAWING INDEX SEE DRAWING NO. 623729	SUBCONTRACT NO. N/A	INEEL BECHTEL BWXT IDAHO, LLC
NO SCALE	REQUESTER: LEE DAVISON DESIGN: KURT FRITZ DRAWN: ROB HERGESHEIMER PROJECT NO. 020978 SPCL CODE	INEEL OU 3-13 GROUP 1 TANK FARM INTERIM ACTION PHASE 1 LEGEND, ABBREVIATIONS AND GENERAL NOTES
DESIGN PHASE: AFC	FOR REVIEW/APPROVAL SIGNATURES SEE DAR NO 100611	SIZE D · CAGE CODE 01MF3 · INDEX CODE NUMBER AREA 200 TYPE 9999 Q 38 ORIG 090 · DWG-623730 · REV
SAFETY CATEGORY: CG	EFFECTIVE DATE: 4/11/03	SCALE: NONE · SHEET T-3

File: 623730.dwg
Path: G:\cad\Vers-phase
Drawn in Model Space
10 DEC 03 - 11:48 AM

REVISIONS		
REV	DESCRIPTION	EFFECTIVE DATE:
1	SEE DAR-101356	5/7/03

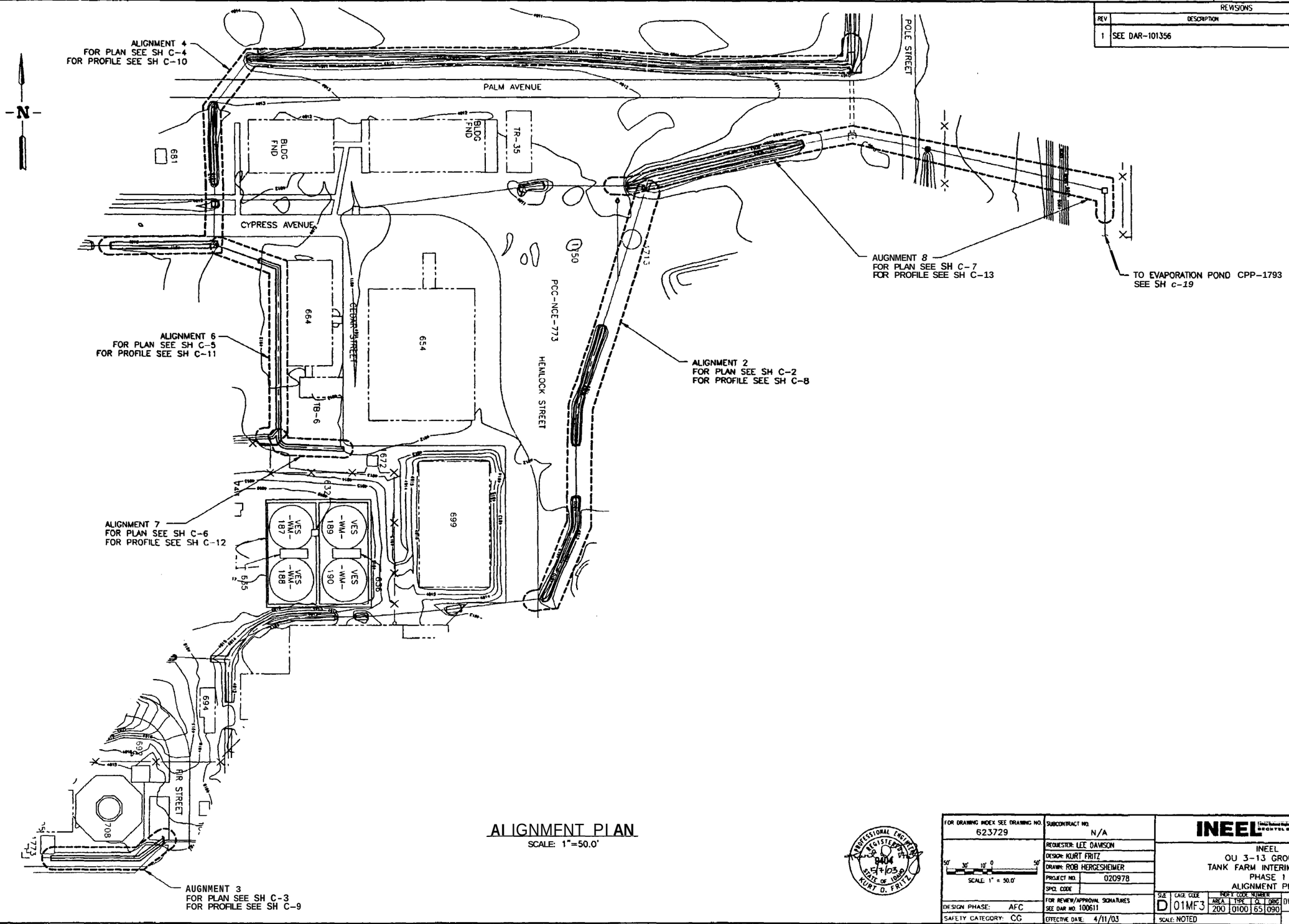

ALIGNMENT PLAN

SCALE: 1"=50.0'

PROFESSIONAL ENGINEER REGISTERED 9404 5/7/03 STATE OF IDAHO KURT D. FRITZ

FOR DRAWING INDEX SEE DRAWING NO. 623729	SUBCONTRACT NO. N/A	INEEL BECHTEL BWXT IDAHO, LLC
50' 30' 10' 0 50' SCALE: 1" = 50.0'	REQUESTER: LEE DAVISON	INEEL OU 3-13 GROUP 1 TANK FARM INTERIM ACTION PHASE 1 ALIGNMENT PLAN
	DESIGN: KURT FRITZ	
	DRAWN: ROB HERGESHEIMER	
	PROJECT NO. 020978	
	SPCL CODE	
DESIGN PHASE: AFC	FOR REVIEW/APPROVAL SIGNATURES SEE DAR NO. 100611	SIZE D · CAGE CODE 01MF3 · INDEX CODE NUMBER AREA 200 TYPE 0100 CL 65 ORG 090 · DWG-623731 · REV 1
SAFETY CATEGORY: CG	EFFECTIVE DATE: 4/11/03	SCALE: NOTED · SHEET C-1

File: 623731-1.dwg Path: p:\rdh5\new-phase1-tank\released Date: 05/08/03 - 07:27 AM Layout Name: NEW ID: RDH5

REVISIONS		
REV	DESCRIPTION	EFFECTIVE DATE:

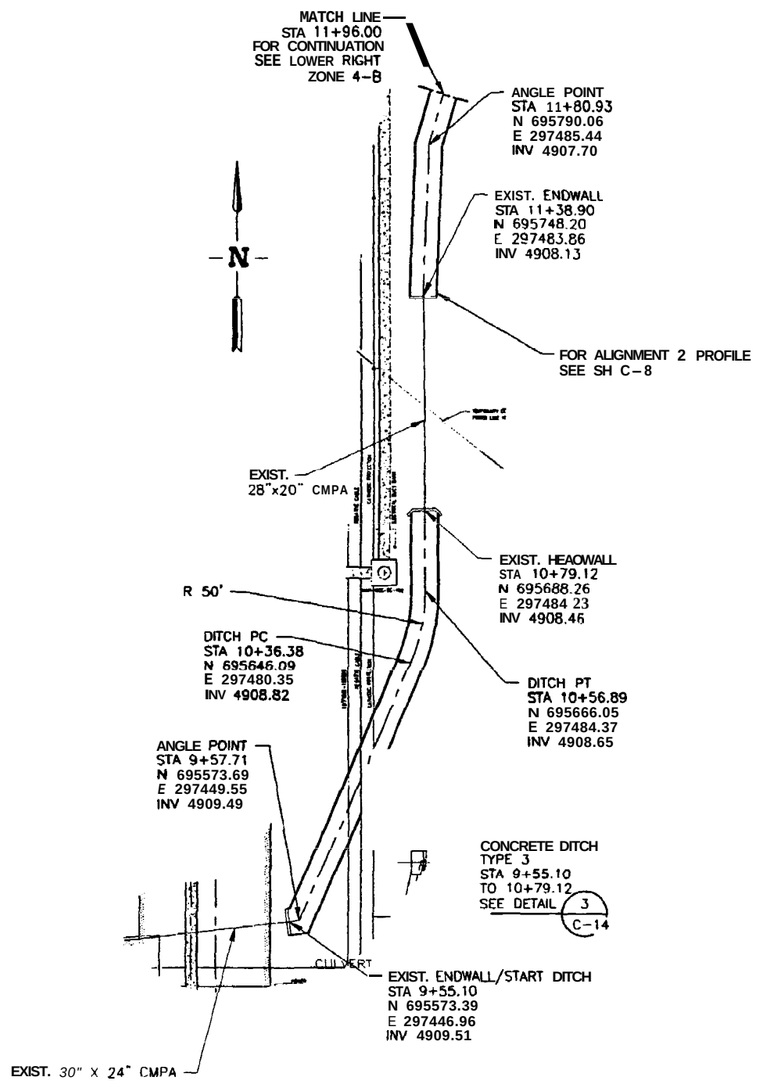

ALIGNMENT 2 PLAN

REF C-1

SCALE: 1"=20.0'

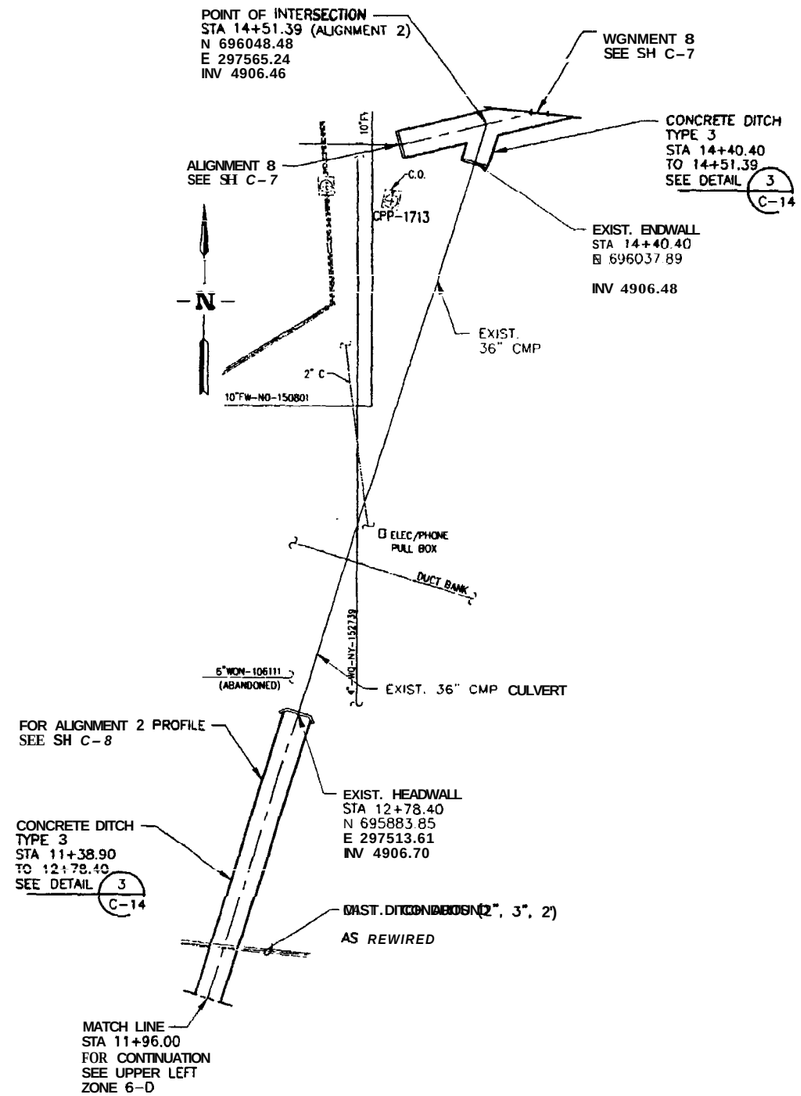

ALIGNMENT 2 PLAN (CONTINUATION)

SCALE: 1"=20.0'

X-REF DRAWING

623766

NOTES

1. HORIZONTAL COORDINATES ARE INTEC SITE SPECIFIC. VERTICAL DATUM IS NRTS (0.35' HIGHER THAN INTEC VERTICAL DATUM).

PROFESSIONAL ENGINEER REGISTERED 9404 4/11/03 STATE OF IDAHO KURT D. FRITZ

FOR DRAWING INDEX SEE DRAWING NO. 623729	SUBCONTRACT NO. N/A	INEEL Bechtel BWXT Idaho, LLC
20' 10' 5' 0 20' SCALE: 1" = 20.0'	REQUESTER: LEE DAVISON	INEEL OU 3-13 GROUP 1 TANK FARM INTERIM ACTION PHASE 1 ALIGNMENT 2 PLAN
	DESIGN: KURT FRITZ	
	DRAWN: ROB HERGESHEIMER	
	PROJECT NO. 020978	
	SPCL CODE	
DESIGN PHASE: AFC	FOR REVIEW/APPROVAL SIGNATURES S/E DAR NO. 100611	SIZE D; CAGE CODE 01MF3; INDEX CODE NUMBER AREA 200, TYPE 0100, SQ 65, ORG 090; DWG-623732; REV
SAFETY CATEGORY: CG	EFFECTIVE DATE: 4/11/03	SCALE: NOTED; SHEET C-2

File: 623732.dwg ID: Layout Name: D Size
Path: G:\cad5\new-phase\ Date: 04/11/2003 - 11:07 AM

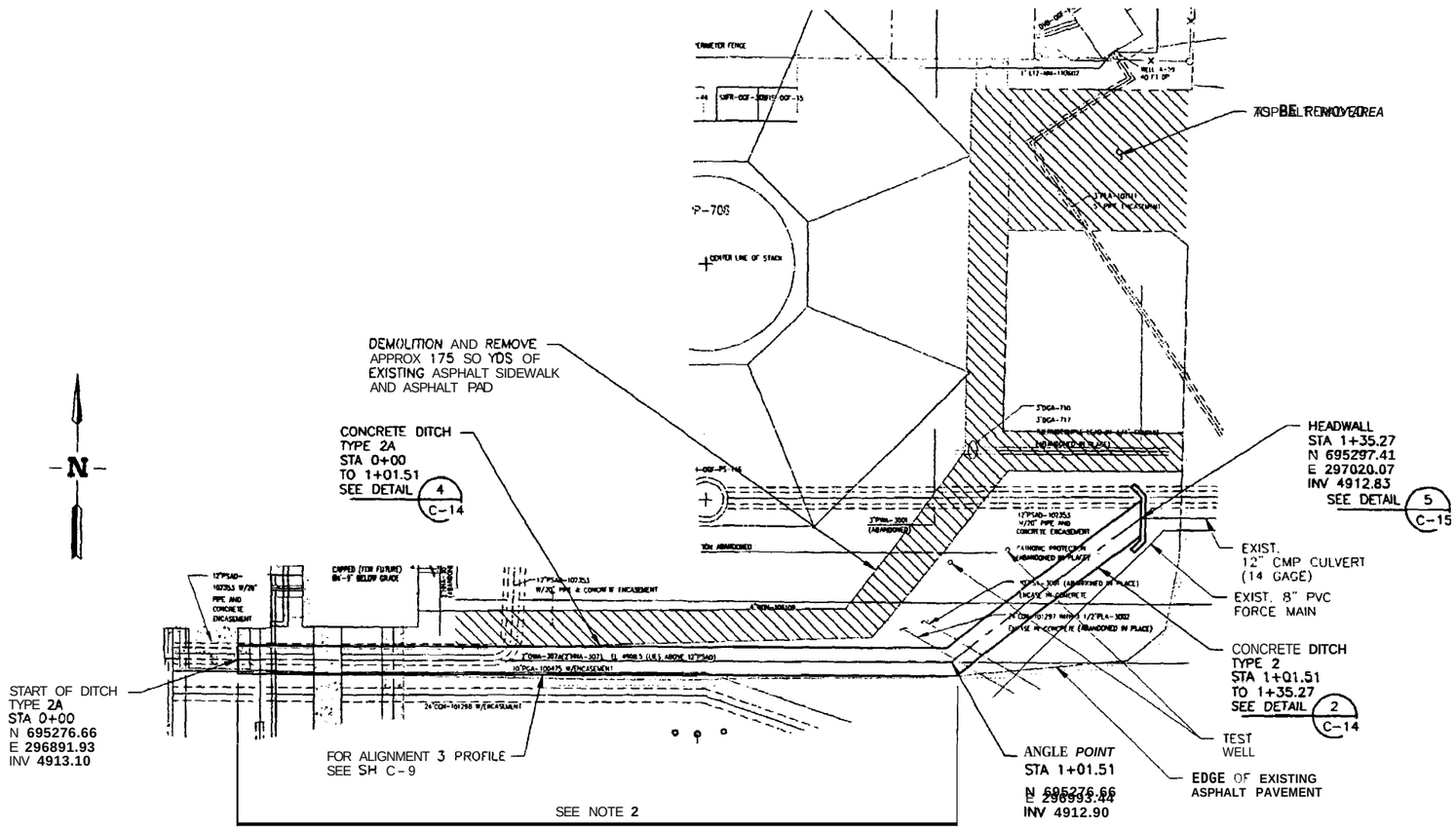

ALIGNMENT 3 PLAN

REF C-1

SCALE: 1"= 10.0'

LEGEND

DEMOLITION

X-REF DRAWING

623766

NOTES

1. HORIZONTAL COORDINATES ARE INTEC SITE SPECIFIC. VERTICAL DATUM IS NRTS (0.35' HIGHER THAN INTEC VERTICAL DATUM).
2. SAWCUT EXISTING ASPHALT PAVEMENT TO CLEAN STRAIGHT LINE. MATCH SOUTH SIDE OF NEW CONCRETE DITCH TO SAWCUT EDGE Of EXISTING ASPHALT PAVEMENT.
3. SEE SHEET C-25 FOR FINAL GRADING AND PAVING IN THIS AREA

PROFESSIONAL ENGINEER REGISTERED 9404 4/11/03 STATE OF IDAHO KURT D. FRITZ

FOR DRAWING INDEX SEE DRAWING NO. 623729	SUBCONTRACT NO. N/A	INEEL BECHTEL BWXT IDAHO, LLC
10' 5' 0 10' SCALE: 1" = 10.0'	REQUESTER: LEE DAVISON DESIGN: KURT FRITZ DRAWN: ROB HERGESHEIMER PROJECT NO. 020978 SPCL CODE	INEEL OU 3-13 GROUP 1 TANK FARM INTERIM ACTION PHASE 1 ALIGNMENT 3 PLAN
DESIGN PHASE: AFC	FOR REVIEW/APPROVAL SIGNATURES SEE DAR NO. 100611	SIZE D · CAGE CODE 01MF3 · INDEX CODE NUMBER AREA 200 TYPE 0100 G 65 ORG 090 · DWG-623733 · REV
SAFETY CATEGORY: CG	EFFECTIVE DATE: 4/11/03	SCALE: NOTED · SHEET C-3

File: 623733.dwg ID: MLW5 Layout Name: align-3
Path: O:\rdh3\new-phase1-tankfarm\CADBK\WCDRP3 - 11:06 A.M.

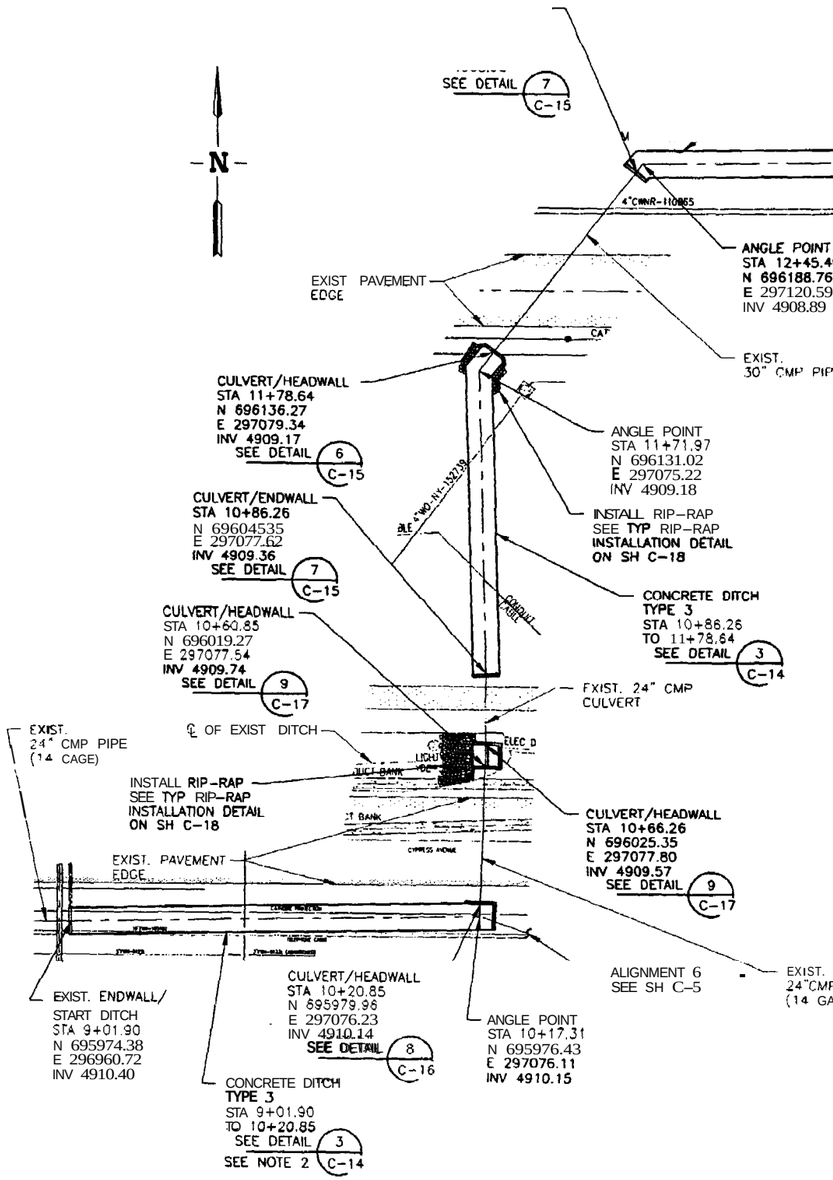

ALIGNMENT 4 PLAN

SCALE: 1"=20.0'

REF C-1

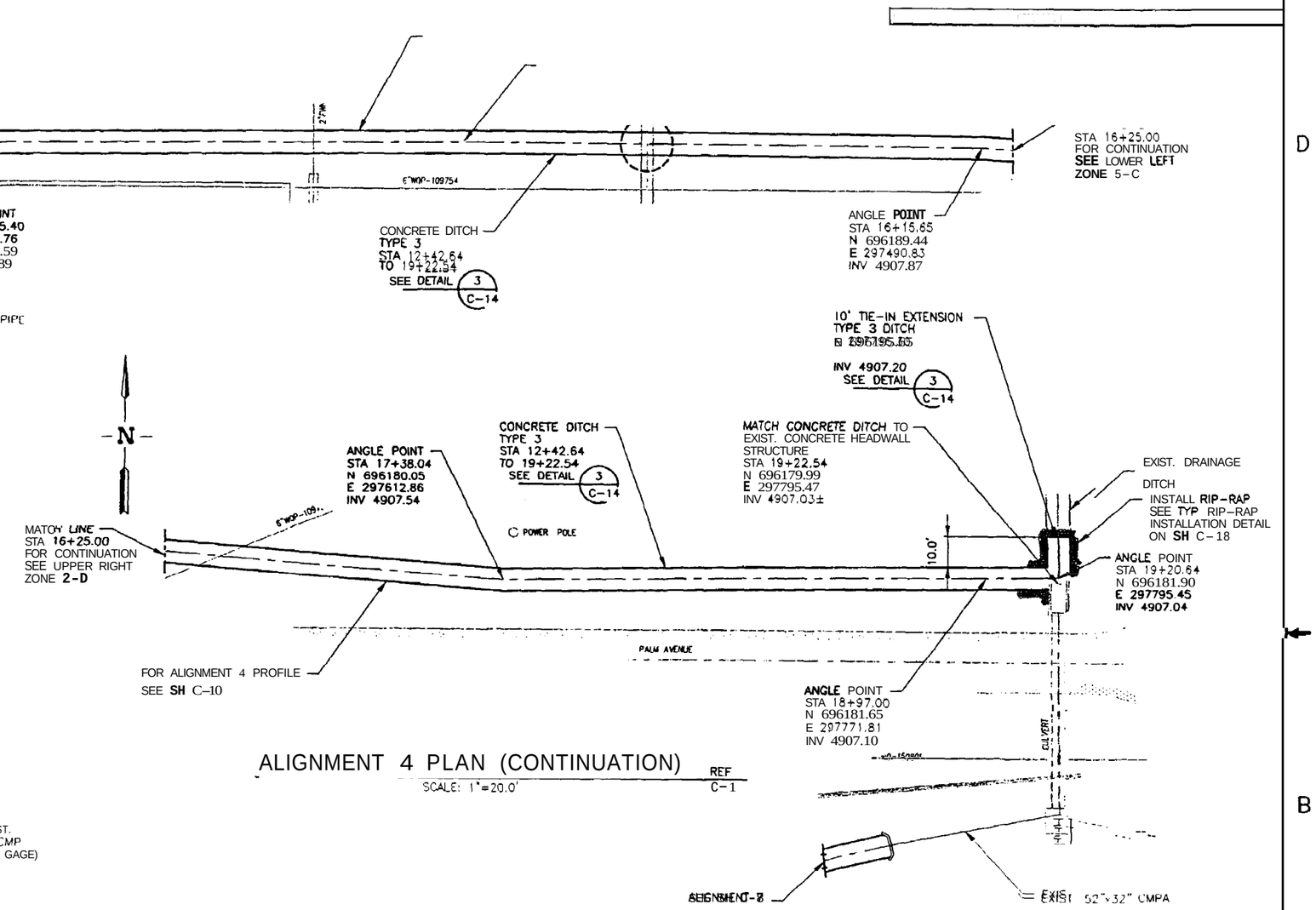

ALIGNMENT 4 PLAN (CONTINUATION)

SCALE: 1"=20.0'

REF C-1

X-REF DRAWING

623766

NOTES

1. HORIZONTAL COORDINATES ARE INTEC *SITE* SPECIFIC. VERTICAL DATUM *IS* NRTS (0.35' HIGHER THAN INTEC VERTICAL DATUM).
2. SEE SHEET C-26 FOR FINAL PAVING IN THIS AREA.

PROFESSIONAL ENGINEER REGISTERED 9404 4/11/03 STATE OF IDAHO KURT D. FRITZ

FOR DRAWING INDEX SEE DRAWING NO. 623729	SUBCONTRACT NO. N/A	INEEL
20' 10' 5' 0 20' SCALE: 1" = 20.0'	REQUESTER: LEE DAWSON DESIGN: KURT FRITZ DRAWN: ROB HERGESHEIMER	INEEL OU 3-13 GROUP 1 TANK FARM INTERIM ACTION PHASE 1 ALIGNMENT 4 PLAN
	PROJECT NO. 020978 SPCL CODE	
DESIGN PHASE: AFC	FOR REVIEW/APPROVAL SIGNATURES SIE DAR NO 100611	SITE D · CAGE CODE 01MF3 · INDEX CODE NUMBER AMLA 200 · DEPT 0100 · GL 65 · ORG 090 · DWG-623734 · REV
SAFETY CATEGORY: CG	EFFECTIVE DATE: 4/11/03	SCALE: NOTED · SHEET C-4

Layout Name: D Site
Date: 4/11/2003 - 11:53 A.M.
File: 623734.dwg
Path: G:\ron5\new-phase3\CHEEKGNA\DWG

REVISIONS		
REV	DESCRIPTION	EFFECTIVE DATE:

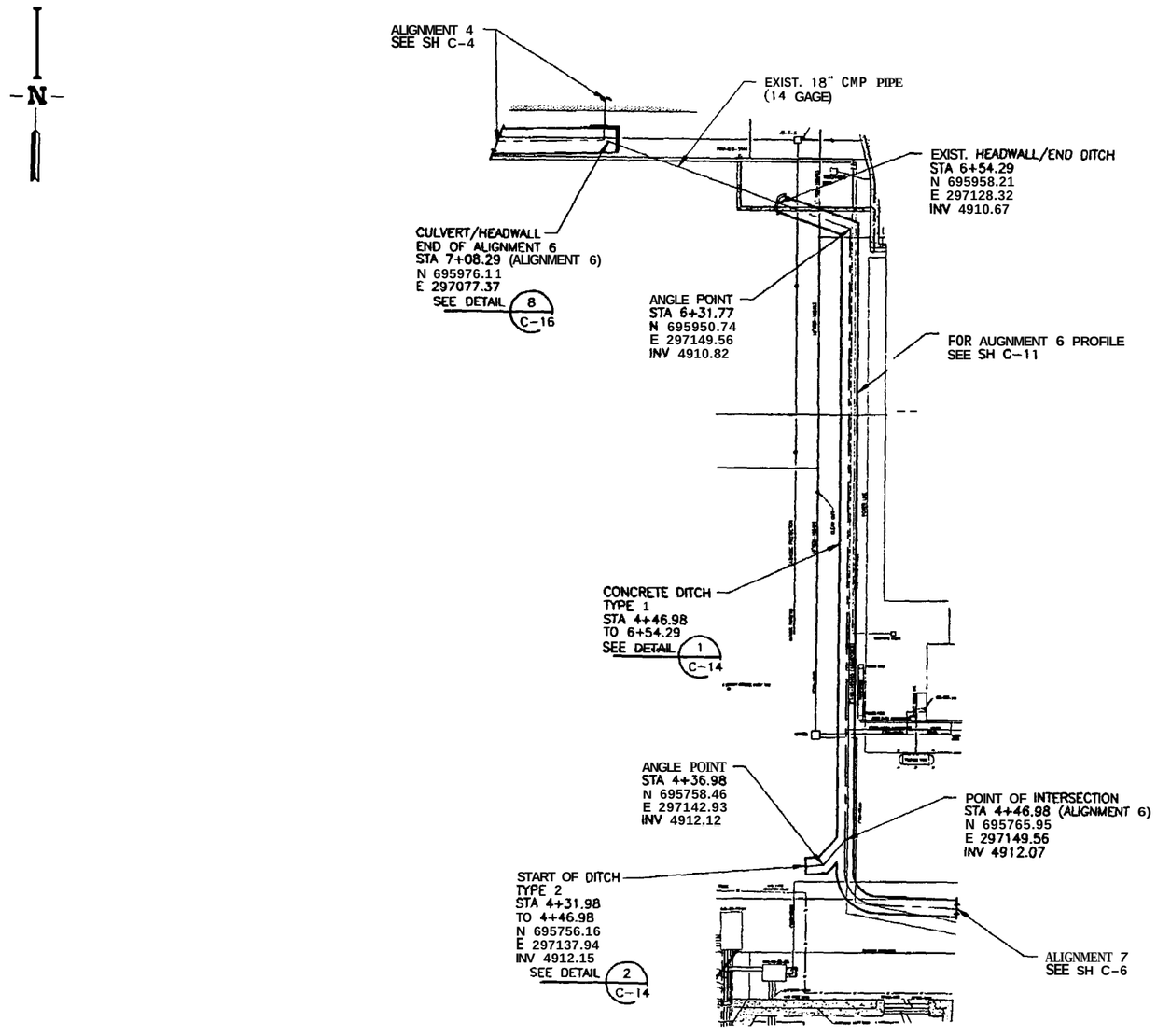

ALIGNMENT 6 PLAN

SCALE: 1"=20.0' REF C-1

X-REF DRAWING

623766

NOTES

1. HORIZONTAL COORDINATES ARE INTEC SITE SPECIFIC. VERTICAL DATUM IS NRTS (0.35' HIGHER THAN INTEC VERTICAL DATUM).
2. SEE SHEET C-26 FOR FINAL PAVING IN THIS AREA.

PROFESSIONAL ENGINEER REGISTERED 9404 4/11/03 STATE OF IDAHO KURT D. FRITZ

FOR DRAWING INDEX SEE DRAWING NO. 623729	SUBCONTRACT NO. N/A	INEEL BECHTEL BWXT IDAHO, LLC
20' 10' 5' 0 20' SCALE: 1" = 20.0'	REQUESTER: LEE DAVISON DESIGN: KURT FRITZ DRAWN: ROB HERCESHEIMER PROJECT NO. 020978 SPCL CODE	INEEL OU 3-13 GROUP 1 TANK FARM INTERIM ACTION PHASE 1 ALIGNMENT 6 PLAN
DESIGN PHASE: AFC	FOR REVIEW/APPROVAL SIGNATURES SEE DAR NO. 100611	SIZE D · CAGE CODE 01MF3 · INDEX CODE NUMBER AREA 200 TYPE 0100 CL 65 ORIG 090 · DWG-623735 · REV
SAFETY CATEGORY: CG	EFFECTIVE DATE: 4/11/03	SCALE: NOTED · SHEET C-5

File: 623735.dwg Path: C:\rdh5\new-phase1-tank\dwg\ID: MLM3 Layout Name: D Size 4/11/03 - 11:05 AM

REVISIONS		
REV	DESCRIPTION	EFFECTIVE DATE:

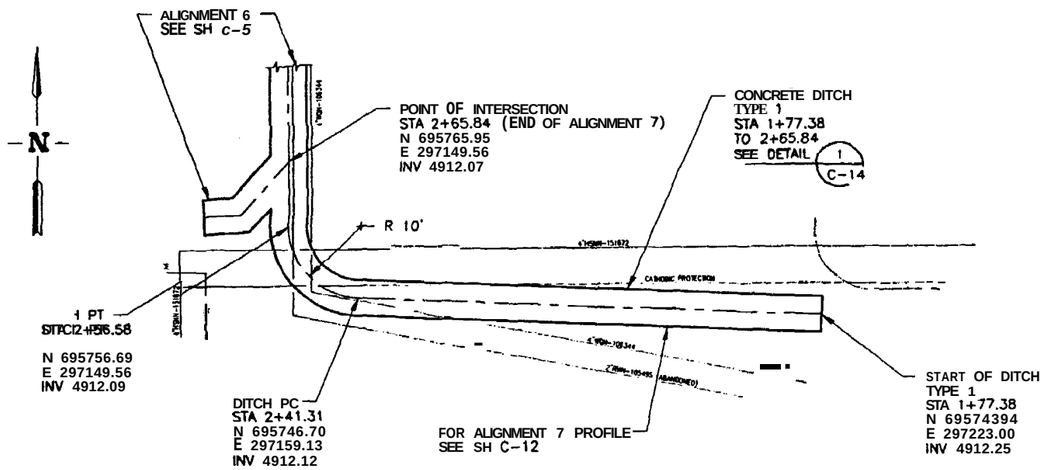

ALIGNMENT 7 PLAN

REF C-1

SCALE: 1"=10.0'

X-REF DRAWING

623766

NOTES

1. HORIZONTAL COORDINATES ARE INTEC SITE SPECIFIC. VERTICAL DATUM IS NRTS (0.35' HIGHER THAN INTEC VERTICAL DATUM).
2. SEE SHEET C-26 FOR FINAL PAVING IN THIS AREA.

PROFESSIONAL ENGINEER REGISTERED 9404 3/11/03 STATE OF IDAHO KURT D. FRITZ

FOR DRAWING INDEX SEE DRAWING NO. 623729	SUBCONTRACT NO. N/A	INEEL
10' 5' 0 10' SCALE 1" = 10.0'	REQUESTER: LEE DAVISON	INEEL OU 3-13 GROUP 1 TANK FARM INTERIM ACTION PHASE 1 ALIGNMENT 7 PLAN
	DESIGN: KURT FRITZ	
	DRAWN: ROB HERGESHEIMER	
	PROJECT NO. 020978	
	SPCL CODE	
DESIGN PHASE: AFC	FOR REVIEW/APPROVAL SIGNATURES SEE DAR NO. 100611	SIZE D · CAGE CODE 01MF3 · INDEX CODE NUMBER AREA 200 TYPE 0100 CL 65 ORG 090 · DWG-623736 · REV
SAFETY CATEGORY: CG	EFFECTIVE DATE: 4/11/03	SCALE: NOTED · SHEET C-6

Layout Name: align-7
ID: N/A
File: 623736.dwg
Path: G:\rdh5\rear-phase

REVISIONS		
REV	DESCRIPTION	EFFECTIVE DATE

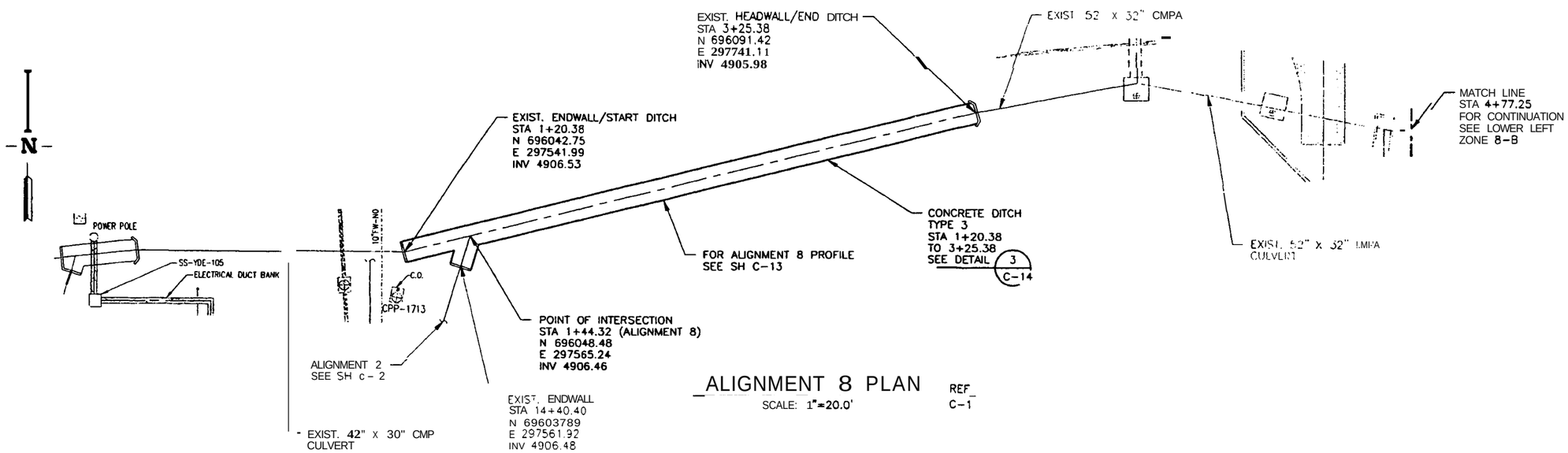

ALIGNMENT 8 PLAN

SCALE: 1"=20.0'

REF C-1

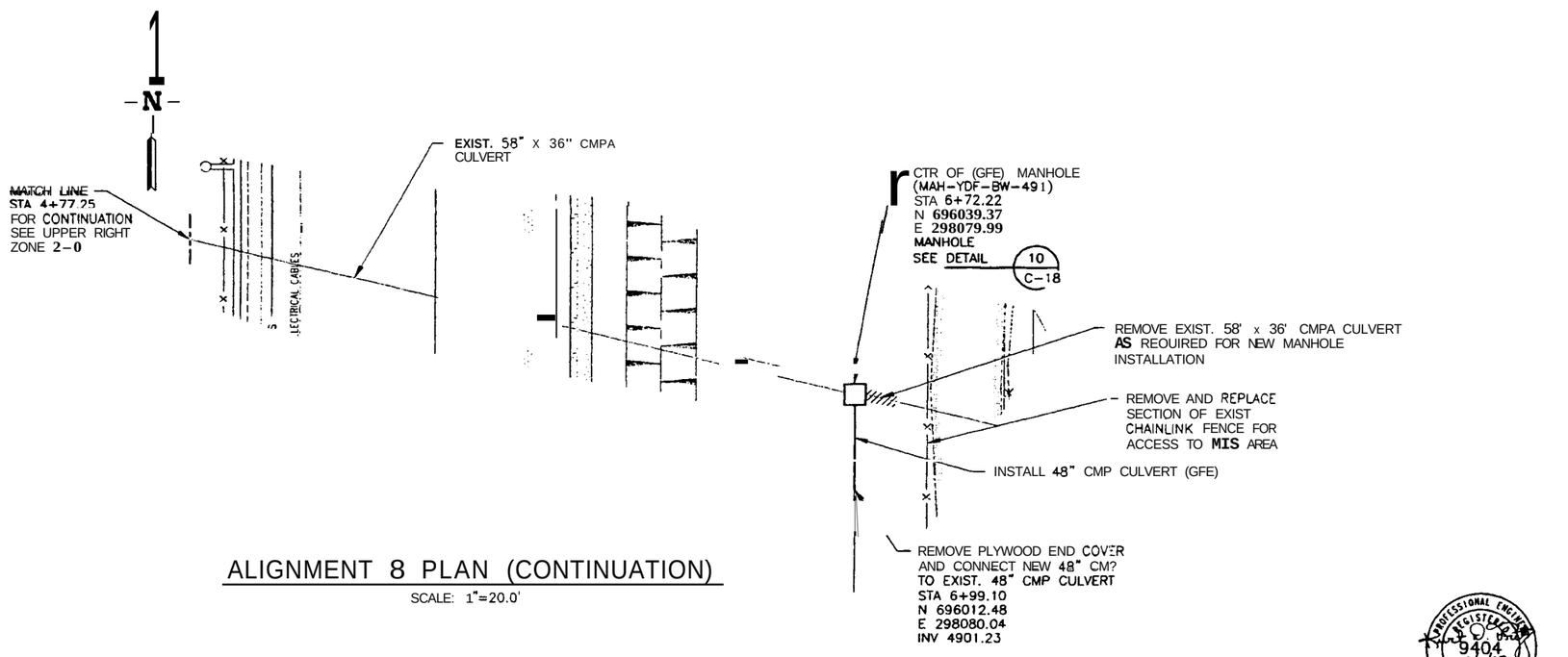

ALIGNMENT 8 PLAN (CONTINUATION)

SCALE: 1"=20.0'

X-REF DRAWING

623766

NOTES

1. HORIZONTAL COORDINATES ARE INTEC SITE SPECIFIC. VERTICAL DATUM IS NRTS (0.35' HIGHER THAN INTEC VERTICAL DATUM).

PROFESSIONAL ENGINEER REGISTERED 9404 4/11/03 STATE OF IDAHO KURT D. FRITZ

FOR DRAWING INDEX SEE DRAWING NO. 623729	SUBCONTRACT NO. N/A	INEEL BECHTEL BWXT IDAHO, LLC
20' 10' 5' 0 20' SCALE: 1" = 20.0'	REQUESTER: LEE DAVISON	INEEL OU 3-13 GROUP 1 TANK FARM INTERIM ACTION PHASE 1 ALIGNMENT 8 PLAN
	DESIGN: KURT FRITZ	
	DRAWN: ROB HERGESHEIMER	
	PROJECT NO. 020978	
	SPCL CODE	
DESIGN PHASE: AFC	FOR REVIEW/APPROVAL SIGNATURES SEE DAR NO. 100611	SIZE D · CAGE CODE 01MF3 · INDEX CODE NUMBER AREA 200 TYPE 0100 CL 65 ORIG 090 · DWG-623737 · REV
SAFETY CATEGORY: CG	EFFECTIVE DATE: 4/11/03	SCALE: NOTED · SHEET C-7

File 623737.dwg ID: MLW5 Layout Name: D Size
Path G:\dh5\new-phase1-inactive\mdlex\dwg\623737 - 11:56 AM

REVISIONS		
REV	DESCRIPTION	EFFECTIVE DATE

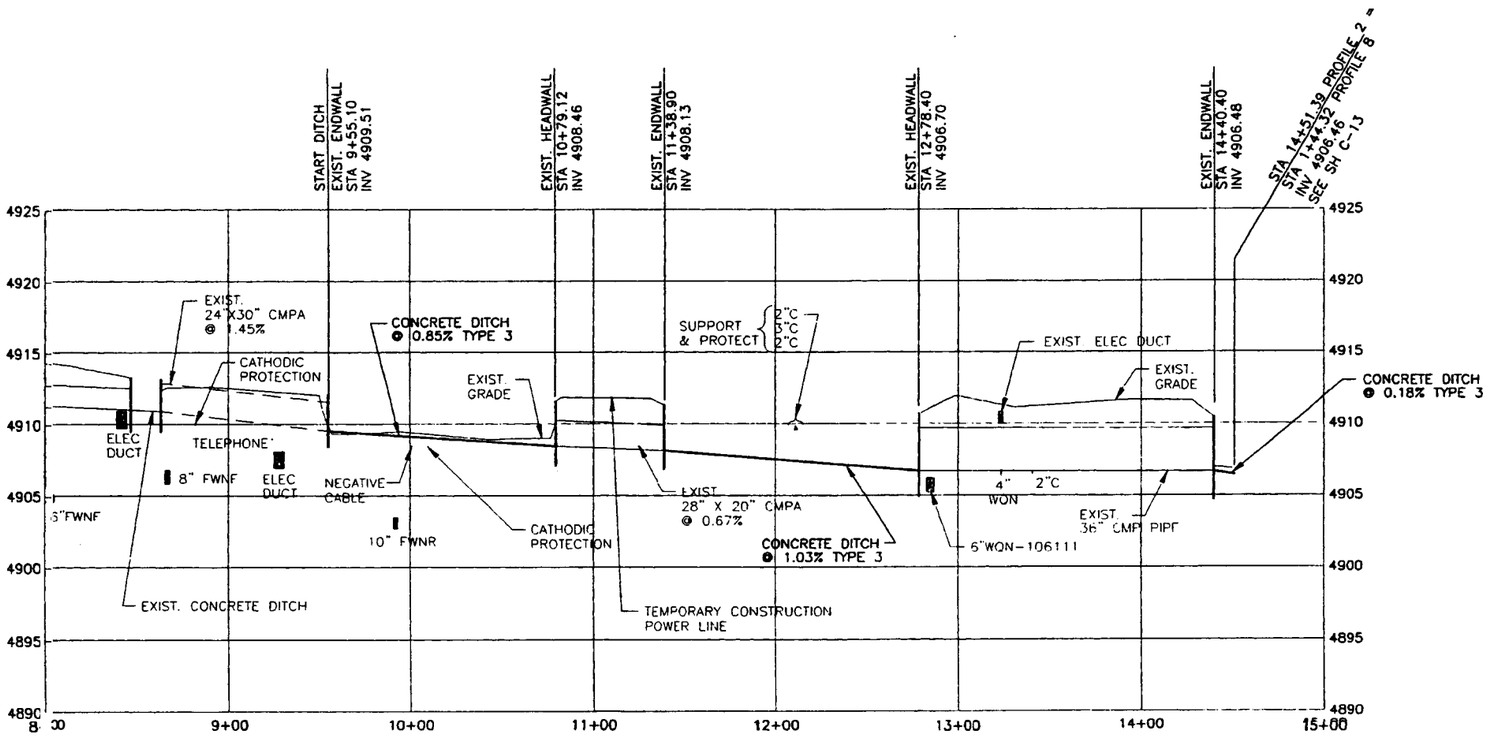

ALIGNMENT Z PROFILE

SCALE: HORIZ 1"=40.0'
VERT 1"=5.0'

REF
C-1
C-2

NOTES

1. ELEVATIONS AND LOCATIONS OF ELECTRICAL DUCT BANKS AND PIPES SHOWN SHADED ARE APPROXIMATE ELEVATIONS AND LOCATIONS ONLY.
2. VERTICAL DATUM IS NRTS (0.35' HIGHER THAN INTEC VERTICAL DATUM).
3. ALIGNMENT Z DITCH WAS EXCAVATED TO THE LINES AND GRADE SHOWN ON THIS SHEET IN 2001 MINOR RE-GRADING AND COMPACTING IS REQUIRED TO RE-ESTABLISH DESIGN GRADES.

PROFESSIONAL ENGINEER REGISTERED 9404 4/11/03 STATE OF IDAHO KURT D. FRITZ

FOR DRAWING INDEX SEE DRAWING NO. 623729	SUBCONTRACT NO. N/A	INEEL BECHTEL BWXT IDAHO, LLC
HORIZONTAL 1"=40.0' VERTICAL 1"=5.0'	REQUESTER: LEE DAVISON DESIGN: KURT FRITZ DRAWN: ROB HERGESHEIMER PROJECT NO. 020978 SPCL CODE	INEEL OU 3-13 GROUP 1 TANK FARM INTERIM ACTION PHASE 1 ALIGNMENT 2 PROFILE
DESIGN PHASE: AFC	FOR REVIEW/APPROVAL SIGNATURES SEE DAR NO. 100611	SIZE D · CAGE CODE 01MF3 · INDEX CODE NUMBER AREA 200 TYPE 0100 CL 02 DWG 090 · DWG-623738 · REV
SAFETY CATEGORY: CG	EFFECTIVE DATE: 4/11/03	SCALE: NOTED · SHEET C-8

Drawn in Model Space
01-REV 3.1

REVISIONS		
REV	DESCRIPTION	EFFECTIVE DATE

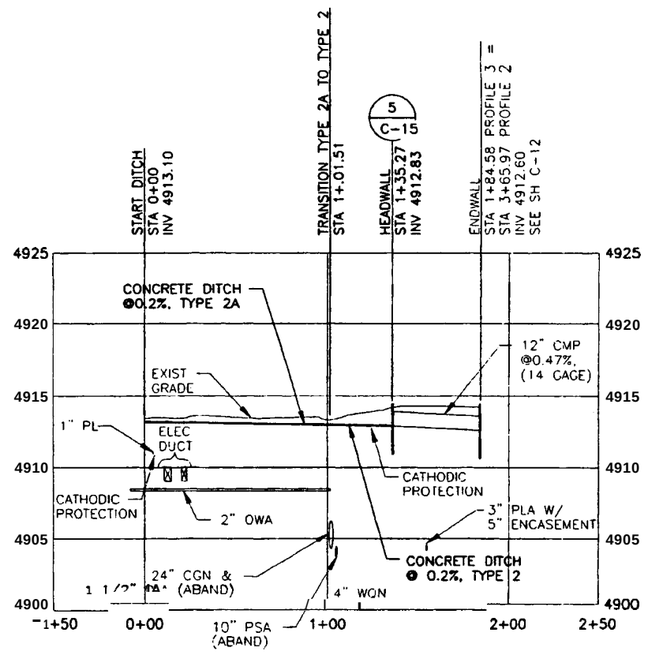

ALIGNMENT 3 PROFILE

SCALE HORIZ 1"=40.0'
VERT 1"=5.0'

REF
C-1
C-3

NOTES

1. VERTICAL OATUM IS NRTS (0.35' HIGHER THAN INTEC VERTICAL OATUM)

PROFESSIONAL ENGINEER REGISTERED 9404 4/11/03 STATE OF IDAHO KURT D. FRITZ

FOR DRAWING INDEX SEE DRAWING NO. 623729	SUBCONTRACT NO N/A	INEEL BECHTEL BWXT IDAHO, LLC
HORIZONTAL 1"=40.0' VERTICAL 1"=5.0'	REQUESTER: LEE DAVISON DESIGN: KURT FRITZ DRAWN: ROB HERGESHEIMER PROJECT NO. 020978 SPCL CODE	INEEL OU 3-13 GROUP 1 TANK FARM INTERIM ACTION PHASE 1 ALIGNMENT 3 PROFILE
DESIGN PHASE: AFC	FOR REVIEW/APPROVAL SIGNATURES SEE DAR NO. 100611	SIZE D · CAGE CODE 01MF3 · INDEX CODE NUMBER AREA 200 TYPE 0100 CL 02 DISC 090 · DWG- 623739 · REV
SAFETY CATEGORY: CG	EFFECTIVE DATE: 4/11/03	SCALE: NOTED · SHEET C-9

File: 623739.dwg ID: MLW5 Drawn in Model Space
Path: G:\rdh5\nea-phase1-tank\dwg\ CHECK ON/CORR3 - 11:48 A.M.

REV	DESCRIPTION	EFFECTIVE DATE

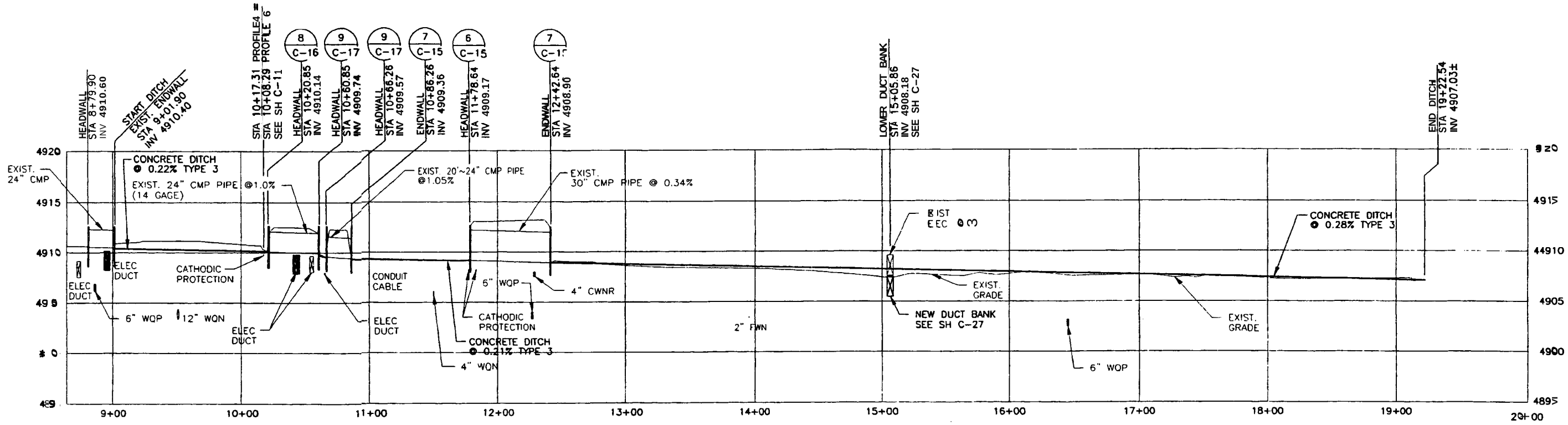

ALIGNMENT 4 PROFILE

SCALE: HORIZ 1"=40.0'
VERT 1"=5.0'

REF
C-1
C-4

NOTES

1. ELEVATIONS AND LOCATIONS OF ELECTRICAL DUCT BANKS AND PIPES SHOWN SHADED ARE APPROXIMATE ELEVATIONS AND LOCATIONS ONLY.
2. VERTICAL DATUM IS NRTS (0.35' HIGHER THAN INTEC VERTICAL DATUM).
3. ALIGNMENT 4 DITCH WAS EXCAVATED TO THE LINES AND GRADE SHOWN ON THIS SHEET IN 2001. MINOR RE-GRADING AND COMPACTING IS REQUIRED TO RE-ESTABLISH DESIGN GRADES.

PROFESSIONAL ENGINEER REGISTERED 9404 4/11/03 STATE OF IDAHO KURT D. FRITZ

FOR DRAWING INDEX SEE DRAWING NO. 623729	SUBCONTRACT NO. N/A	INEEL BECHTEL BWXT IDAHO, LLC
HORIZONTAL 1"=40.0' VERTICAL 1"=5.0'	REQUESTER: LEE DAVISON DESIGN: KURT FRITZ DRAWN: ROB HERGESHEIMER PROJECT NO. 020978 SPCL CODE	INEEL OU 3-13 GROUP 1 TANK FARM INTERIM ACTION PHASE 1 ALIGNMENT 4 PROFILE
DESIGN PHASE: AFC	FOR REVIEW/APPROVAL SIGNATURES SEE DAR NO. 100611	SIZE D · CAGE CODE 01MF3 · INDEX CODE NUMBER AREA 200 TYPE 0100 Q 02 ORG 090 · DWG-623740 · REV
SAFETY CATEGORY: CG	EFFECTIVE DATE 4/11/03	SCALE: NOTED · SHEET C-10

File: 623740.dwg
Path: H:\new-phase1
Drawn in Model Space
CHECKBOARD@/10/03 - 10:43 A.M.

REVISIONS		
REV	DESCRIPTION	EFFECTIVE DATE:

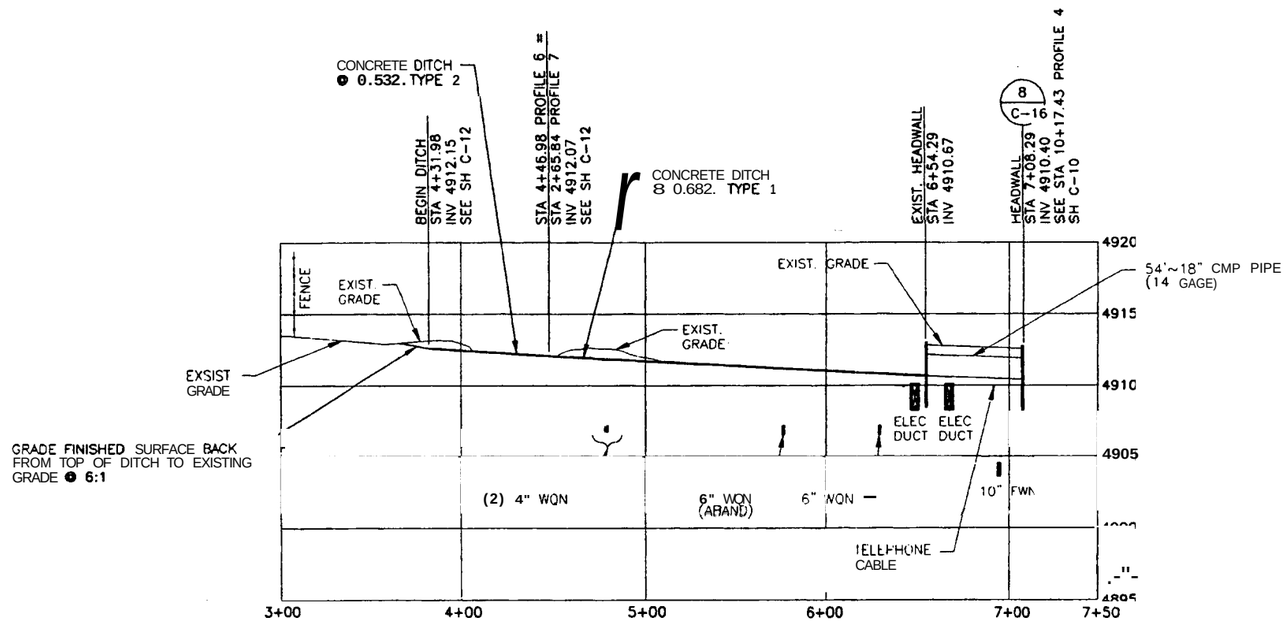

ALIGNMENT 6 PROFILE

SCALE: HORIZ 1"=40.0'
VERT 1"=5.0'

REF
C-1
C-5

NOTES

1. ELEVATIONS AND LOCATIONS OF ELECTRICAL DUCT BANKS AND PIPES SHOWN SHADED ARE APPROXIMATE ELEVATIONS AND LOCATIONS ONLY.
2. VERTICAL DATUM IS NRTS (0.35' HIGHER THAN INTEC VERTICAL DATUM).
3. ALIGNMENT 6 DITCH WAS EXCAVATED TO THE LINES AND GRADE SHOWN ON THIS SHEET IN 2001. MINOR RE-GRADING *AND* COMPACTING IS REQUIRED TO RE-ESTAEUSH DESIGN GRADES.

PROFESSIONAL ENGINEER REGISTERED 9404 4/11/03 STATE OF IDAHO KURT D. FRITZ

FOR DRAWING INDEX SEE DRAWING NO. 623729	SUBCONTRACT NO. N/A
HORIZONTAL 1"=40.0' VERTICAL 1"=5.0'	REQUESTER: LEE DAVISON
	DESIGN: KURT FRITZ
	DRAWN: ROB HERGESHEIMER
	PROJECT NO. 020978
	SPCL CODE
DESIGN PHASE: AFC	FOR REVIEW/APPROVAL SIGNATURES SEE DAR NO. 100611
SAFETY CATEGORY: CG	EFFECTIVE DATE: 4/11/03

INEEL
BECHTEL BWXT IDAHO, LLC

INEEL
OU 3-13 GROUP 1
TANK FARM INTERIM ACTION
PHASE 1
ALIGNMENT 6 PROFILE

SIZE	CAGE CODE	INDEX CODE NUMBER				DWG-	REV
		AREA	TYPE	CL	ORIG		
D	01MF3	200	0100	02	090	623741	

SCALE: NOTED
SHEET C-11

File: 623741.dwg ID: MLW5 Drawn in Model Space
Path: C:\ydm3\rea-phase1-tankfarm\CADBEX\CAD\PROJ03 - 11:00 A.M.

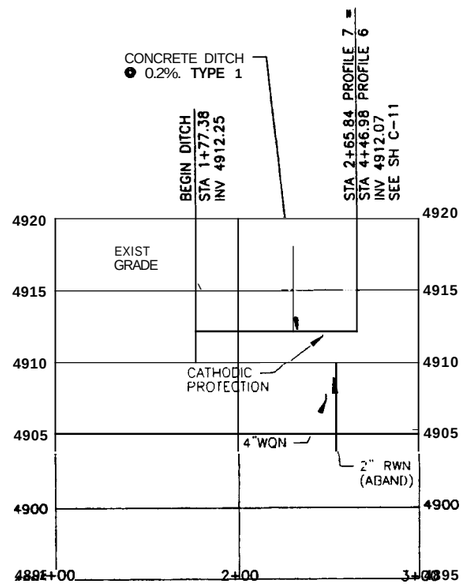

ALIGNMENT 7 PROFILE

SCALE: HORIZ 1"=40.0'
VERT 1"=5.0'

REF
C-1
C-6

NOTES

1. VERTICAL DATUM IS NRTS (0.35' HIGHER THAN INTEC VERTICAL DATUM).
2. ALIGNMENT 7 DITCH WAS EXCAVATED TO THE LINES AND GRADE SHOWN ON THIS SHEET IN 2001. MINOR RE-GRADING AND COMPACTING IS REQUIRED TO RE-ESTABLISH DESIGN GRADES.

PROFESSIONAL ENGINEER REGISTERED 9404 4/11/03 STATE OF IDAHO KURT D. FRITZ

FOR DRAWING 623742 DRAWING NO	SUBCONTRACT NO N/A	INEEL (Idaho National Engineering & Environmental Laboratory) BECHTEL BWXT IDAHO, LLC
HORIZONTAL 1"=40.0' VERTICAL 1"=5.0	REQUESTER: LEE DAVISON DESIGN: KURT FRITZ DRAWN: ROB HERGESHEIMER PROJECT NO 020978 SPCL CODE	INEEL OU 3-13 GROUP 1 TANK FARM INTERIM ACTION PHASE 1 ALIGNMENT 7 PROFILE
DESIGN PHASE AFC	FOR REVIEW/APPROVAL SIGNATURES SEE DAR NO 100611	SIZE D; CAGE CODE 01MF3; INDEX CODE NUMBER AREA 200 TYPE 0100 Q 02 ORIG 090; DWG-623742; REV
SAFETY CATEGORY CG	EFFECTIVE DATE 4/11/03	SCALE NOTED; SHEET C-12

Drawn in Model Space

REVISIONS		
REV	DESCRIPTION	EFFECTIVE DATE

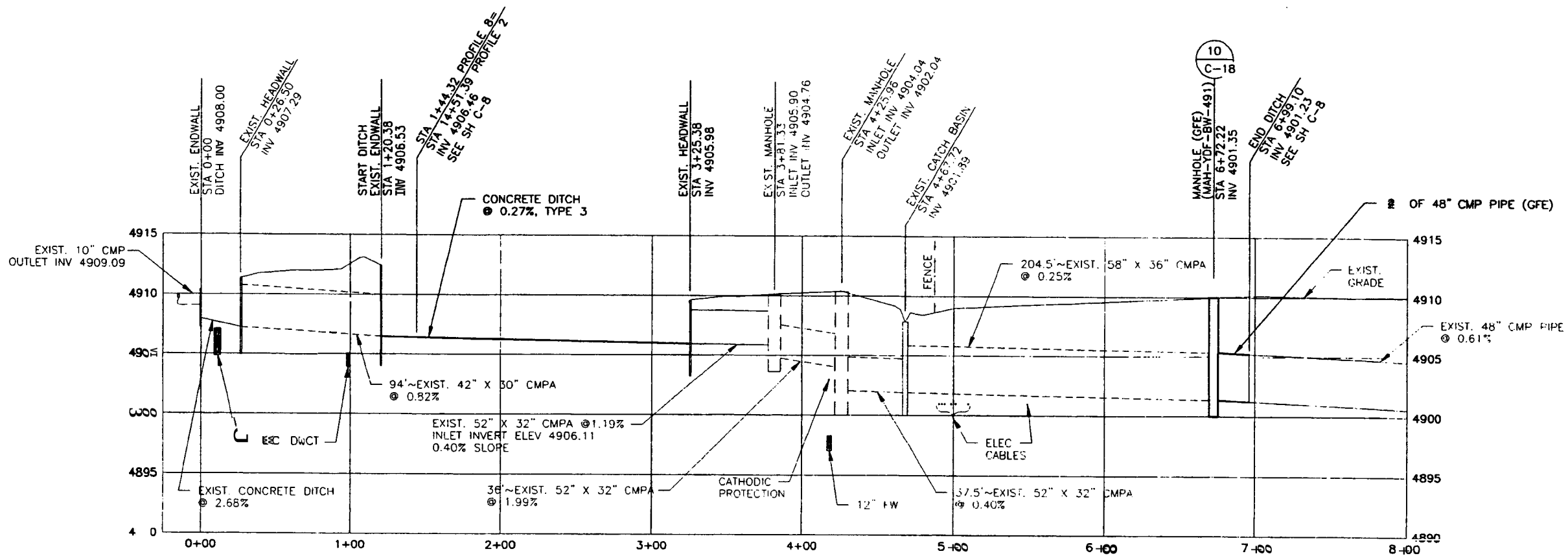

ALIGNMENT 8 PROFILE

SCALE: HORIZ 1"=40.0' VERT 1"=5'.0'

REF C-1 C-7

NOTES

1. ELEVATIONS AND LOCATIONS OF ELECTRICAL DUCT BANKS AND PIPES SHOWN SHADED ARE APPROXIMATE ELEVATIONS AND LOCATIONS ONLY.
2. VERTICAL DATUM IS NRTS (0.35' HIGHER THAN INTEC VERTICAL DATUM).
3. ALIGNMENT 8 DITCH WAS EXCAVATED TO THE LINES AND GRADE SHOWN ON THIS SHEET IN 2001. MINOR RE-GRADING AND COMPACTING IS REQUIRED TO RE-ESTABLISH DESIGN GRADES.

PROFESSIONAL ENGINEER REGISTERED 9404 4/11/03 STATE OF IDAHO KURT D. FRITZ

FOR DRAWING INDEX SEE DRAWING NO. 623729	SUBCONTRACT NO. N/A	INEEL BECHTEL BWXT IDAHO, LLC
HORIZONTAL 1"=40.0' VERTICAL 1"=5.0'	REQUESTER: LEE DAVISON DESIGN: KURT FRITZ DRAWN: ROB HERGESHEIMER PROJECT NO. 020978 SPCL CODE	INEEL OU 3-13 GROUP 1 TANK FARM INTERIM ACTION PHASE 1 ALIGNMENT 8 PROFILE
DESIGN PHASE: AFC SAFETY CATEGORY: CG	FOR REVIEW/APPROVAL SIGNATURES SEE DAR NO. 100611 EFFECTIVE DATE: 4/11/03	SIZE D; CAGE CODE 01MF3; INDEX CODE NUMBER AREA 200, TYPE 0100, CL 02, ORIG 090; DWG- 623743; REV SCALE: NOTED; SHEET C-13

File: 623743.dwg ID: MLM5 Drawn in Model Space
Path: C:\ENS\new-phase1-tank\arch\DWGS\ENCORR03 - 11:22 A.M.

REV	DESCRIPTION	EFFECTIVE DATE:

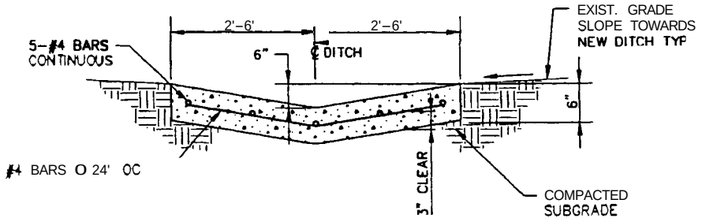

TYP CONCRETE DITCH DETAIL (1 / C-5) REF C-6, C-11, c-12

TYPE 1

ALIGNMENT 6: STA 4+46.98 TO 6+54.29
ALIGNMENT 7: STA 1+77.38 TO 2+65.84

NOTES

1. IMPRESSED CONTRACTION JOINTS AT 5'-0' OC MAXIMUM. SEE PIP DETAIL THIS SHEET.
2. EXPANSION JOINTS AT 40'-0' OC MAXIMUM. SEE TYP DETAIL THIS SHEET.

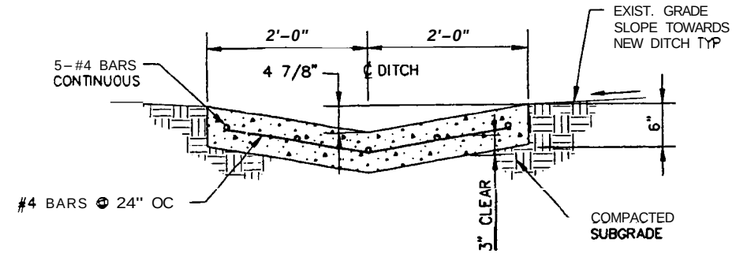

TYP CONCRETE DITCH DETAIL (2 / C-3) REF C-13

TYPE 2

ALIGNMENT 3: STA 1+01.51 TO 1+35.27
ALIGNMENT 6: STA 4+31.98 TO 4+46.98

NOTES

1. IMPRESSED CONTRACTION JOINTS AT 5'-0" OC MAXIMUM SEE TYP DETAIL THIS SHEET.
2. EXPANSION JOINTS AT 40'-0" OC MAXIMUM. SEE TYP DETAIL THIS SHEET.

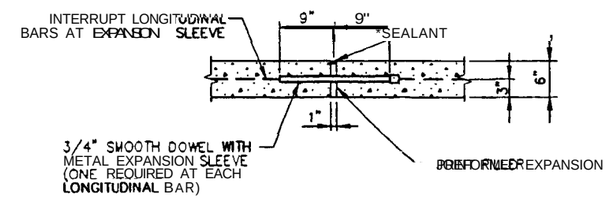

TYP EXPANSION JOINT DETAIL

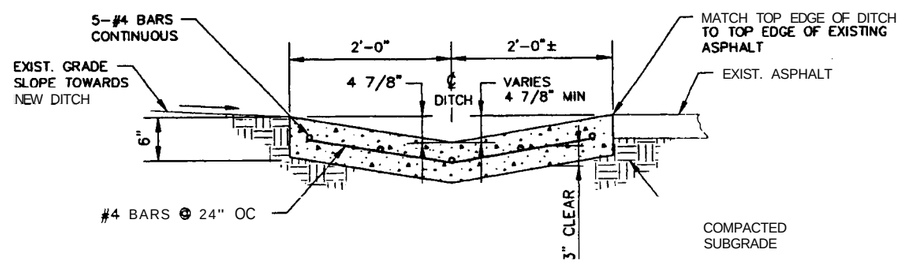

TYP CONCRETE DITCH DETAIL (4 / C-3) REF C-9

TYPE 2A

ALIGNMENT 3: STA 0+00 TO 1+01.51

NOTES

1. IMPRESSED CONTRACTION JOINTS AT 5'-0" OC MAXIMUM. SEE TYP DETAIL THIS SHEET.
2. EXPANSION JOINTS AT 40'-0' OC MAXIMUM. SEE TYP DETAIL THIS SHEET.

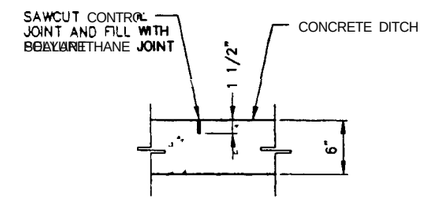

TYPICAL CONTRACTION JOINT DETAIL

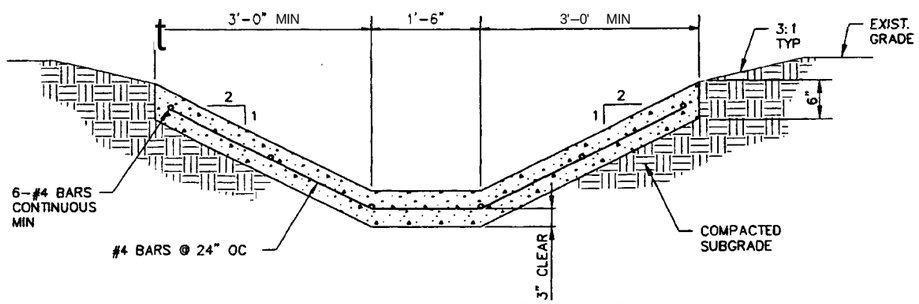

TYP CONCRETE DITCH DETAIL (3 / C-2) REF c-4, c-7, C-8, c-10, C-13

TYPE 3

ALIGNMENT 2 STA 9+55.10 TO 10+79.12
11+38.90 TO 12+78.40
14+40.40 TO 14+51.39
ALIGNMENT 4 STA 9+01.90 TO 10+20.85
10+86.26 TO 11+78.64
12+42.64 TO 19+22.54
ALIGNMENT 8: STA 1+20.38 TO 3+25.38

NOTES

1. IMPRESSED CONTRACTION JOINTS AT 5'-0" OC MAXIMUM. SEE TYP DETAIL THIS SHEET.
2. EXPANSION JOINTS AT 40'-0" OC MAXIMUM, SEE TYP DETAIL THIS SHEET.

PROFESSIONAL ENGINEER REGISTERED 9404 STATE OF IDAHO KURT D. FRITZ 4/11/03

FOR DRAWING INDEX SEE DRAWING NO. 623729	SUBCONTRACT NO. N/A	INEEL
NO SCALE	REQUESTER: LEE DAVISON DESIGN: KURT FRITZ DRAWN: ROB HERGESHEIMER PROJECT NO. 020978 SPCL CODE	INEEL OU 3-13 GROUP 1 TANK FARM INTERIM ACTION PHASE 1 DITCH DETAILS
DESIGN PHASE: AFC	FOR REVIEW/APPROVAL SIGNATURES SEE BAR NO. 100611	SIZE D · CAGE CODE 01MF3 · INDEX CODE NUMBER AREA 200 TYPE 0100 Q 62 ORIG 090 · DWG-623744 · REV
SAFETY CATEGORY: CG	EFFECTIVE DATE: 4/11/03	SCALE: NONE · SHEET C-14

Drawn in Model Space
form: DNEEX-SINGCDRW3 - 11:22 A.M.
File: 623744.dwg
Path: G:\rdh5\new-p

REVISIONS		
REV	DESCRIPTION	EFFECTIVE DATE:

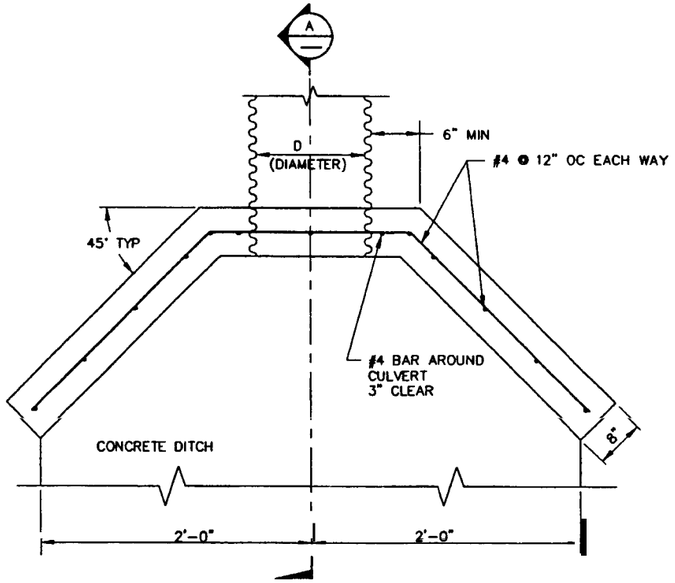

PLAN

TYPICAL HEADWALL WITH WINGS DETAIL (5 / C-3) REF C-9
TYPE 2 DITCH

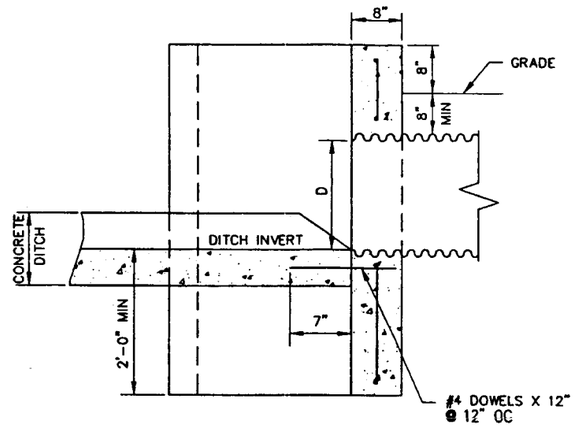

SECTION (A / –)

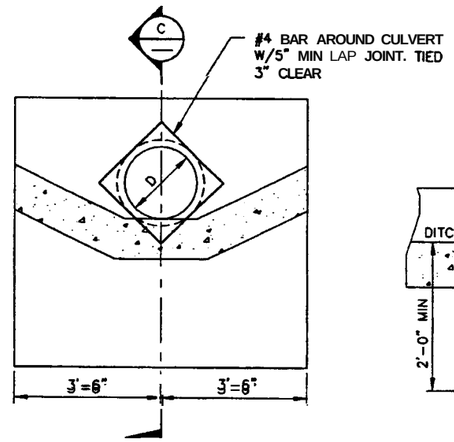

ELEVATION

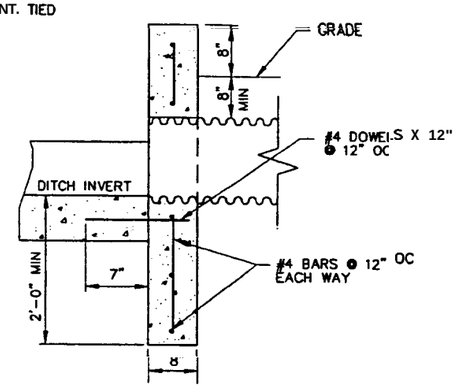

SECTION (C / –)

TYPICAL ENDWALL DETAIL (7 / C-4) REF C-10
TYPE 3 DITCH

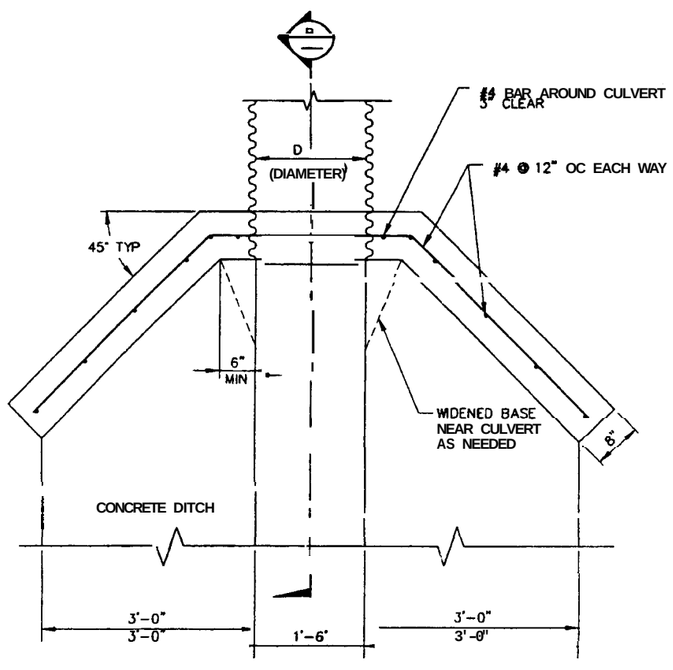

PLAN

TYPICAL HEADWALL WITH WINGS DETAIL (6 / C-4) REF C-10
TYPE 3 DITCH

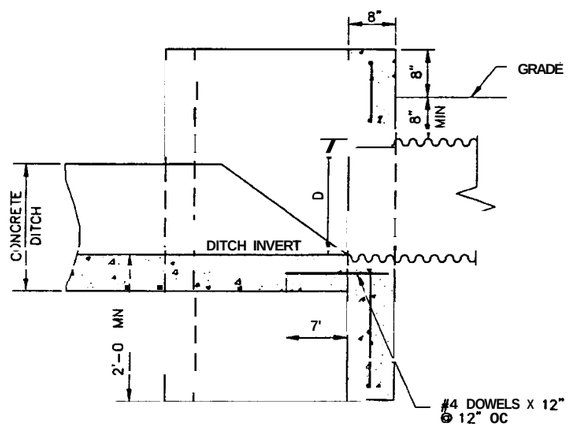

SECTION (B / –)

NOTES

1. CONCRETE IS CLASS 45. REINFORCING STEEL IS #4 AS SHOWN
2. PROVIDED 3/4" CHAMFER ON ALL EXPOSED CORNERS.
3. PROVIDE 3" MIN CONCRETE COVER OMR REBAR.

PROFESSIONAL ENGINEER REGISTERED 9404 4/11/03 STATE OF IDAHO KURT D. FRITZ

FOR DRAWING INDEX SEE DRAWING NO. 623729	SUBCONTRACT NO. N/A	INEEL BECHTEL BWXT IDAHO, LLC
NO SCALE	REQUESTER: LEE DAVISON DESIGN: KURT FRITZ DRAWN: ROD HENDERSHIMER PROJECT NO. 020978 SPCL CODE	090 OU 3-13 GROUP 1 TANK FARM INTERIM ACTION PHASE 1 HEADWALL AND ENDWALL DETAILS & SECTIONS
DESIGN PHASE: AFC	FOR REVIEW/APPROVAL SIGNATURES SEE DAR NO. 100611	SIZE D · CAGE CODE 01MF3 · INDEX CODE NUMBER AREA 200 TYPE 0100 CL 62 ORIG 90 · DWG-623745 · REV
SAFETY CATEGORY: CG	EFFECTIVE DATE: 4/11/03	SCALE: NONE · SHEET C-15

File: 623745.dwg ID: MLW5 Drawn in Model Space
Path: G:\cds\Inea-phase1-tanks\ CHECK ONLY 11:21 A.M.

REVISIONS		
REV	DESCRIPTION	EFFECTIVE DATE:

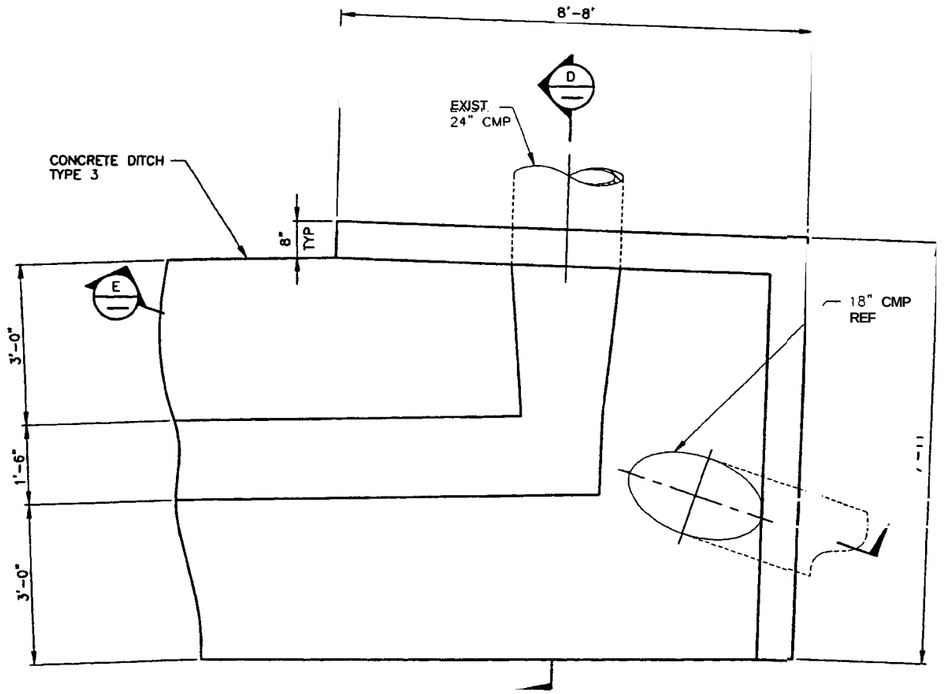

DETAIL (8 / C-4) SCALE: 3/4"=1'-0"
REF C-5 C-10 C-11

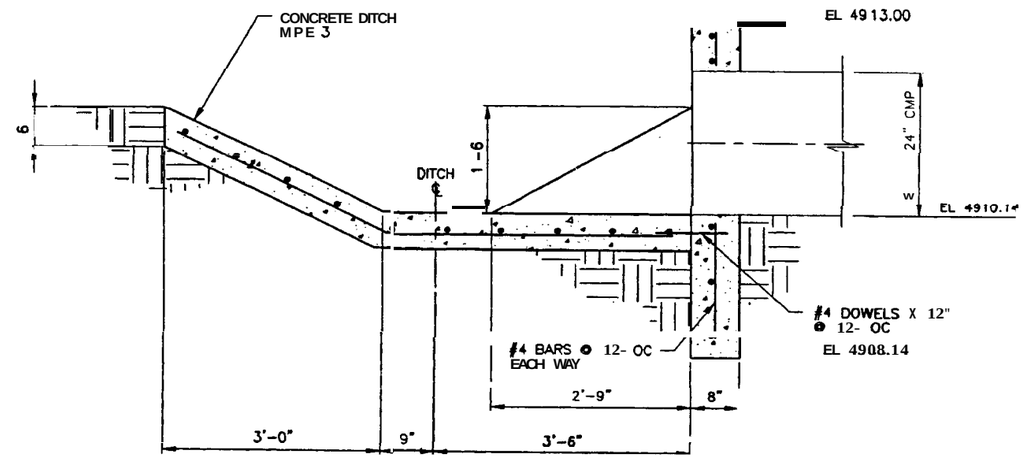

SECTION (D / –)
SCALE: 1"=1'-0"

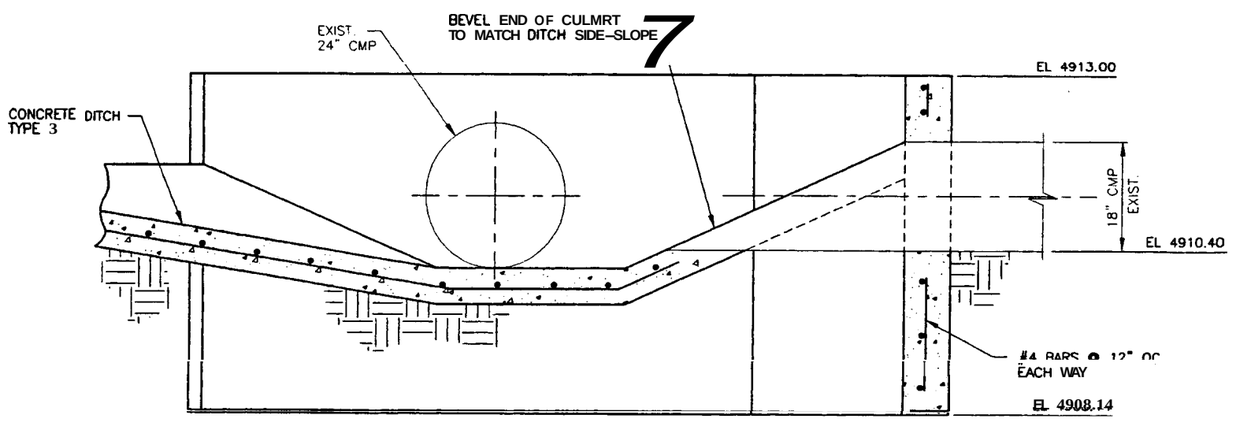

SECTION (E / –)
SCALE: 1"=1'-0"

NOTES

1. PROVIDE 3/4" CHAMFER ON ALL EXPOSED CORNERS.

PROFESSIONAL ENGINEER REGISTERED 9404 4/11/03 STATE OF IDAHO KURT D. FRITZ

FOR DRAWING INDEX SEE DRAWING NO. 623729	SUBCONTRACT NO. N/A
SCALE: 3/4" = 1'-0" / SCALE: 1" = 1'-0"	REQUESTER: LEE DAVISON
	DESIGN: KURT FRITZ
	DRAWN: ROB HERGESHEIMER
	PROJECT NO. 020978
	SPCL CODE
DESIGN PHASE: AFC	FOR REVIEW/APPROVAL SIGNATURES SEE DAR NO. 100611
SAFETY CATEGORY: CG	EFFECTIVE DATE: 4/11/03

INEEL

INEEL
OU 3-13 GROUP 1
TANK FARM INTERIM ACTION
PHASE 1
HEADWALL DETAIL AND SECTIONS

SIZE	CAGE CODE	INDEX CODE NUMBER AREA	TYPE	G	ORG	DWG-	REV
D	01MF3	200	0100	62	090	623746	

SCALE: NOTED SHEET C-16

File: 623746.dwg Path: G:\rdh5\new
Layout Name: D Size A Model: DWG Date: 04/11/2003 - 11:54 A.M.

REVISIONS		
REV	DESCRIPTION	EFFECTIVE DATE:

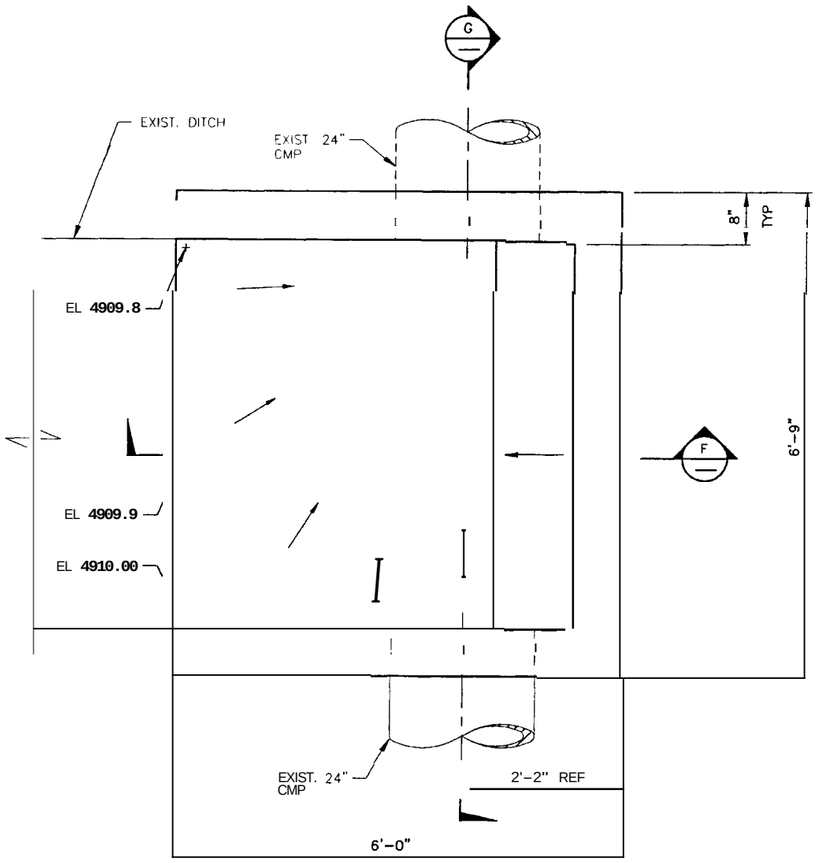

DETAIL 9 C-4 REF C-10
SCALE: 1"=1'-0"

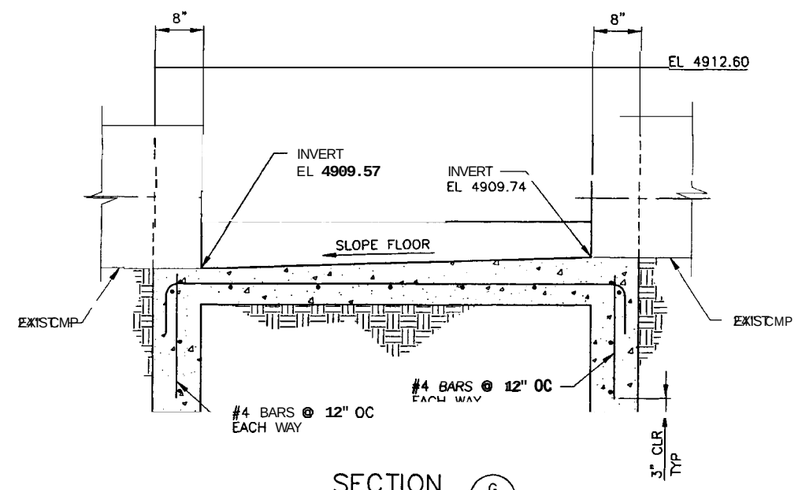

SECTION G
SCALE: 1"=1'-0"

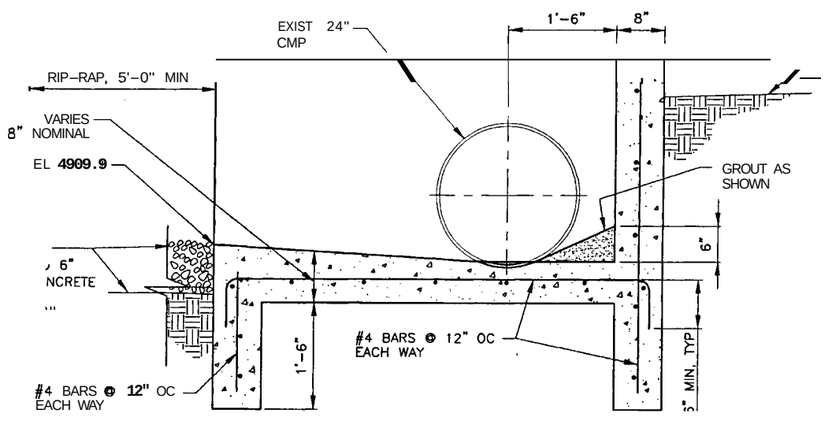

SECTION F
SCALE: 1"=1'-0"

PROFESSIONAL ENGINEER REGISTERED 9404 4/11/03 STATE OF IDAHO KURT D. FRITZ

SCALE 1" = 1'-0"

DESIGN PHASE	AFC
SAFETY CATEGORY	CG

REQUESTER	LEE DAVISON
DESIGN	KURT FRITZ
DRAWN	ROB HERGESHEIMER
PROJECT NO	020978
SPCL CODE	
FOR REVIEW/APPROVAL SIGNATURES SEE DAR NO	100611
ESTCOMP DATE	4/11/03

INEEL
OU 3-13 GROUP 1
TANK FARM INTERIM ACTION
PHASE 1
HEADWALL DETAIL AND SECTIONS

SIZE	CAGE CODE	INDEX CODE NUMBER				DWG-	REV
		AREA	TYPE	CL	ORIG		
D	01MF3	200	0100	62	090	623747	

SCALE: 1"=1'-0"
SHEET C-17

File: 623747.dwg ID: MLWS Layout Name: D Size
Path: G:\cdh5\new-phase1-tank\dwg\623747.dwg Date: 04/11/2003 - 11:46 AM

REVISIONS		
REV	DESCRIPTION	EFFECTIVE DATE:

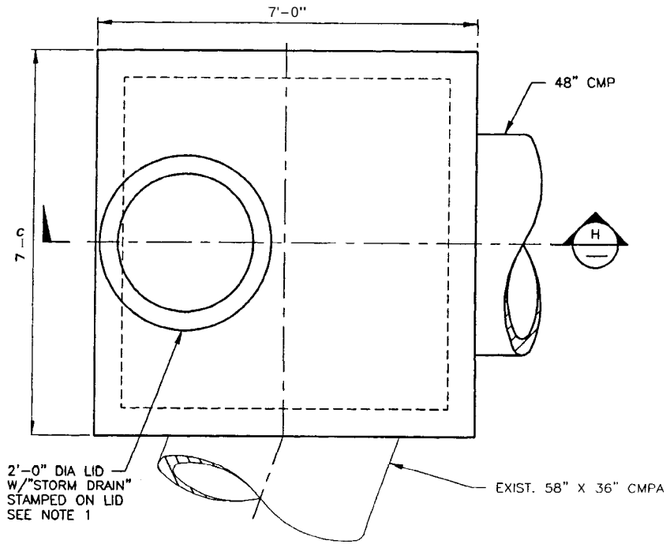

MAH-YDF-BW-491
DETAIL (10) REF C-7 C-13
SCALE: 3/4"=1'-0"

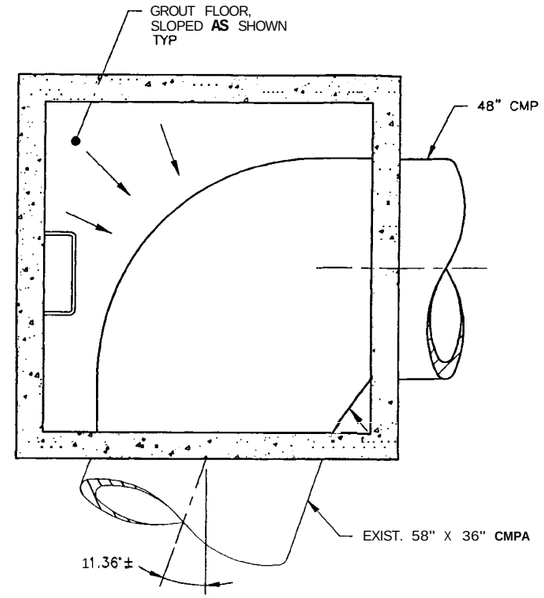

SECTION (J)
SCALE: 3/4"=1'-0"

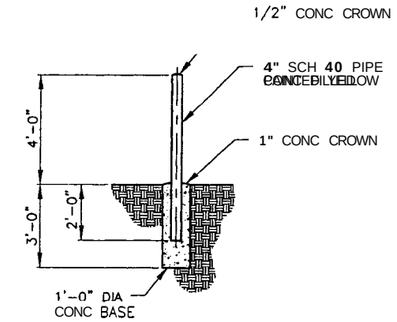

DETAIL (11) C-24
NTS

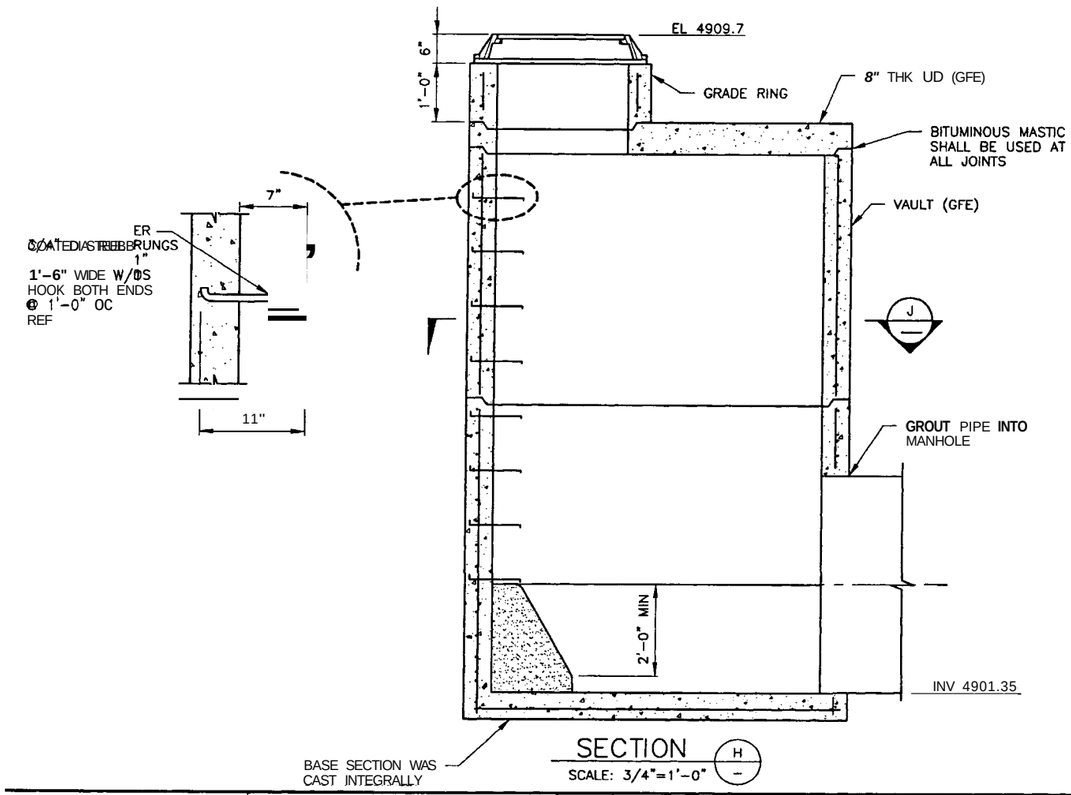

SECTION (H)
SCALE: 3/4"=1'-0"

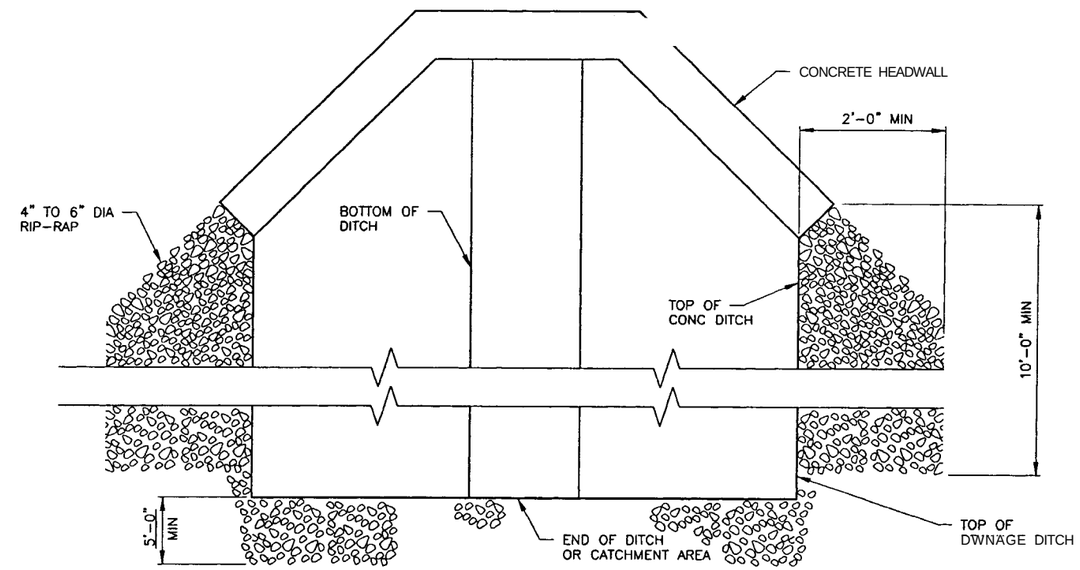

TYP RIP-RAP INSTALLATION DETAIL REF C-4 C-17
SCALE: 1"=1'-0"

NOTES

1. MANHOLE LID SHALL BE **H-20** LOAD **RATED.**

PROFESSIONAL ENGINEER REGISTERED 9404 4/11/03 STATE OF IDAHO KURT D. FRITZ

FOR DRAWING INDEX SEE DRAWING NO. 623729	SUBCONTRACT NO. N/A	INEEL (Idaho National Engineering & Environmental Laboratory) BECHTEL BWXT IDAHO, LLC
SCALE: 3/4" = 1'-0"	REQUESTER: LEE DAVISON	INEEL OU 3-13 GROUP 1 TANK FARM INTERIM ACTION PHASE 1 MANHOLE AND MISC. DETAILS AND SECTIONS
SCALE: 1" = 1'-0"	DESIGN: KURT FRITZ	
	DRAWN: ROB HERGESHEIMER	
	PROJECT NO. 020978	
	SPCL CODE	
DESIGN PHASE: AFC	FOR REVIEW/APPROVAL SIGNATURES SEE DAR NO. 100611	SIZE D · CAGE CODE 01MF3 · INDEX CODE NUMBER AREA 200 TYPE 0100 CL 62 DBG 090 · DWG-623748 · REV
SAFETY CATEGORY: CG	EFFECTIVE DATE: 4/11/03	SCALE: NOTED · SHEET C-18

File: 623748.dwg ID: MLW5 Layout Name: D Size
Path: G:\rdh5\new-phase1-tankfarm\DWG\623748.DWG - 11:05 AM

REVISIONS		
REV	DESCRIPTION	EFFECTIVE DATE:

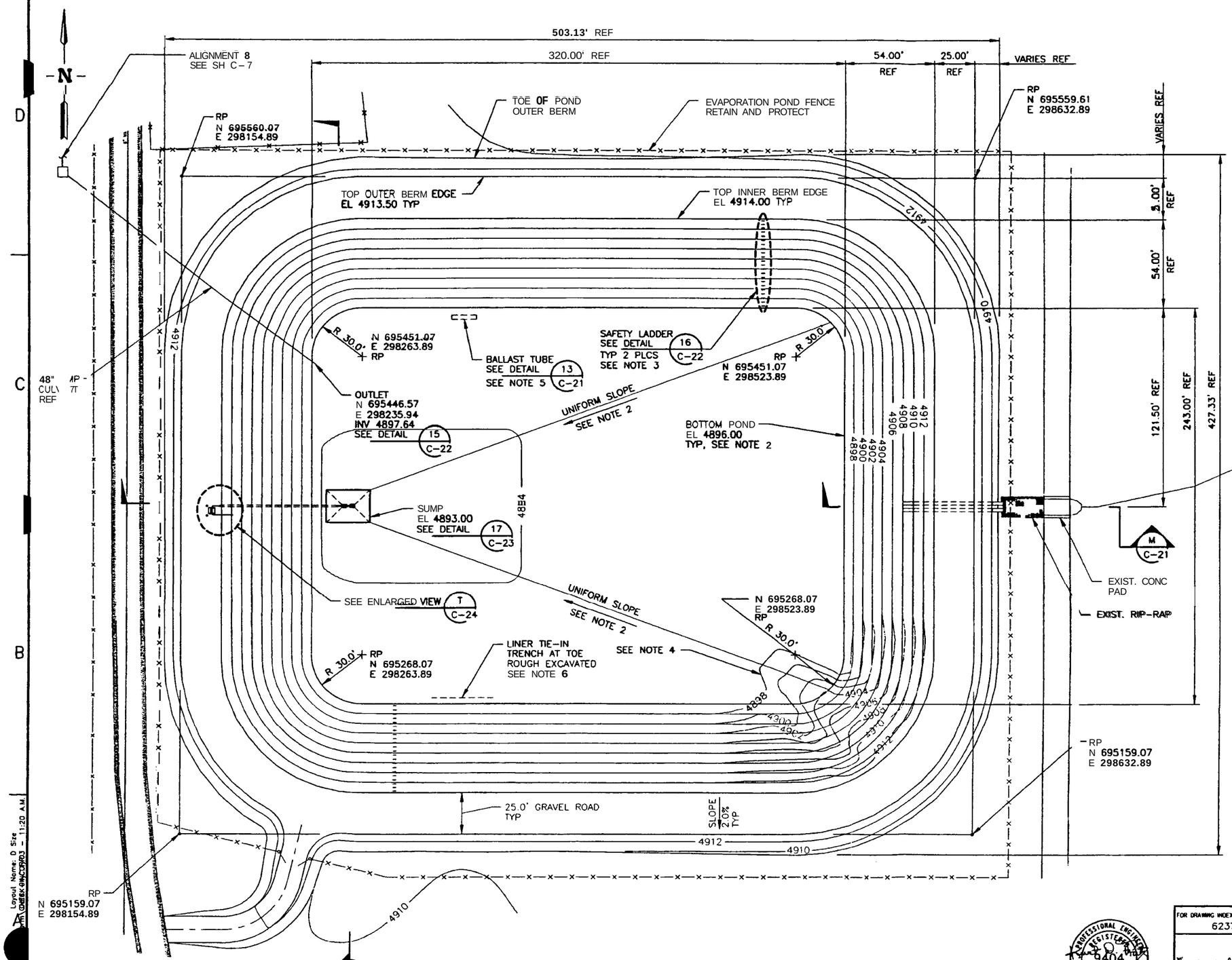

EVAPORATION POND CPP-1793 LINER PLAN REF C-1

LEGEND

XXXX — FINISHED GRADE CONTOURS. SEE NOTE 2

XXXX — MISTING CONTOURS

X-REF DRAWING

623766

NOTES

1. HORIZONTAL COORDINATES ARE INTEC SITE SPECIFIC. VERTICAL DATUM IS NRTS (0.35' HIGHER THAN INTEC VERTICAL DATUM).
2. PONO WAS EXCAVATED IN 2001. MINOR DRESSING OF INTERIOR SLOPES AND POND FLOOR IS REOUIRED TO RE-ESTABLISH DESIGN GRADES AND PREPARE THE SUBGRADE IN ACCORDANCE WITH THE LINER MANUFACTURERS RECOMMENDATIONS.
3. SAFETY LADDERS SHALL BE LOCATED APPROXIMATELY AS SHOWN
4. EXCAVATE AND REMOVE CONSTRUCTION ACCESS RAMP.
5. FOR BALLAST TUBE LAYOUT PLAN SEE SHEET C-21.
6. BACKFILL AND COMPACT EXISTING 3.0' WIDE x 1.5' DEEP TRENCH AROUND PERIMETER OF POND BOTTOM USING EXISTING SOIL PILES AS BACKFILL. CONTOURS OO NOT SHOW TRENCH.

PROFESSIONAL ENGINEER REGISTERED 9404 4/11/03 STATE OF IDAHO KURT D. FRITZ

FOR DRAWING INDEX SEE DRAWING NO. 623729	SUBCONTRACT NO. N/A	INEEL (Idaho National Engineering & Environmental Laboratory) BECHTEL BWXT IDAHO, LLC
30' 20' 10' 0 30' SCALE: 1" = 30.0'	REQUESTER: LEE DAVISON	INEEL OU 3-13 GROUP 1 TANK FARM INTERIM ACTION PHASE 1 EVAPORATION POND CPP-1793 LINER PLAN
	DESIGN: KURT FRITZ	
	DRAWN: ROB HERGESHEIMER	
	PROJECT NO. 020978	
	SPCL CODE	
DESIGN PHASE: AFC	FOR REVIEW/APPROVAL SIGNATURES SEE DAR NO. 100611	SIZE D · CAGE CODE 01MF3 · INDEX CODE NUMBER AREA 200 TYPE 1793 CL 02 ORG 090 · DWG-623749 · REV
SAFETY CATEGORY: CG	EFFECTIVE DATE: 4/11/03	SCALE: 1"=30.0' · SHEET C-19

File: 623749.dwg
Path: G:\cad\new-pkg\
Layout Name: D Size
Plot Date: 4/11/2003 - 11:20 A.M.

REVISIONS		
REV	DESCRIPTION	EFFECTIVE DATE:

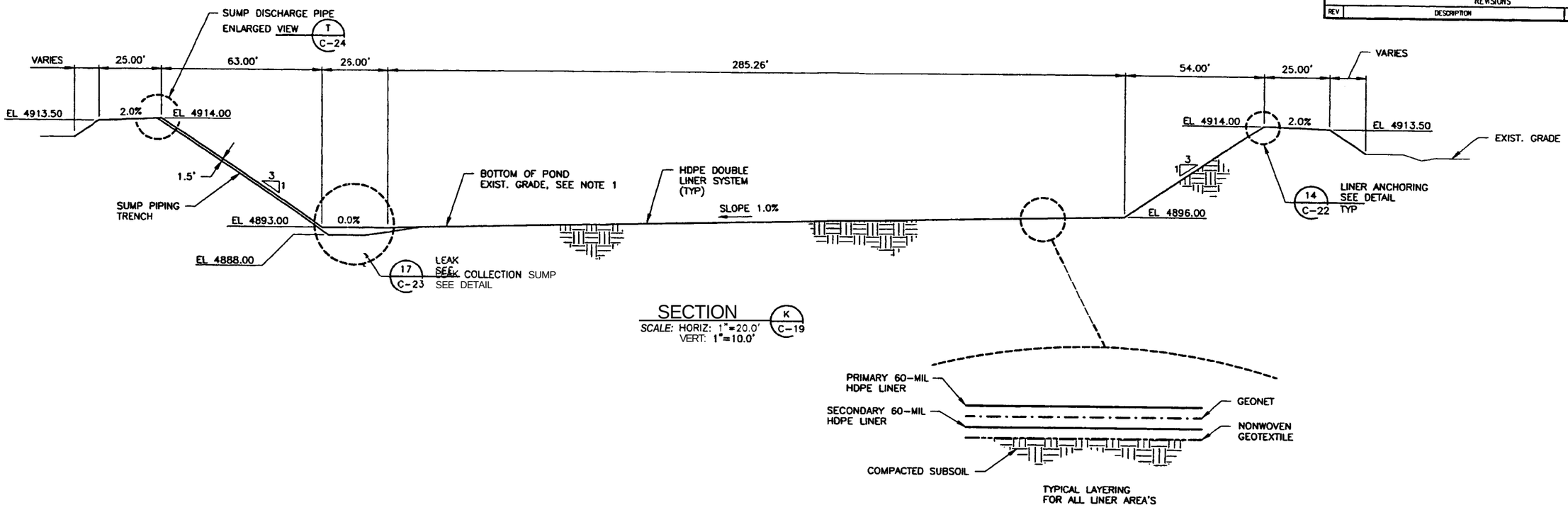

SECTION K C-19

SCALE: HORIZ: 1"=20.0'
VERT: 1"=10.0'

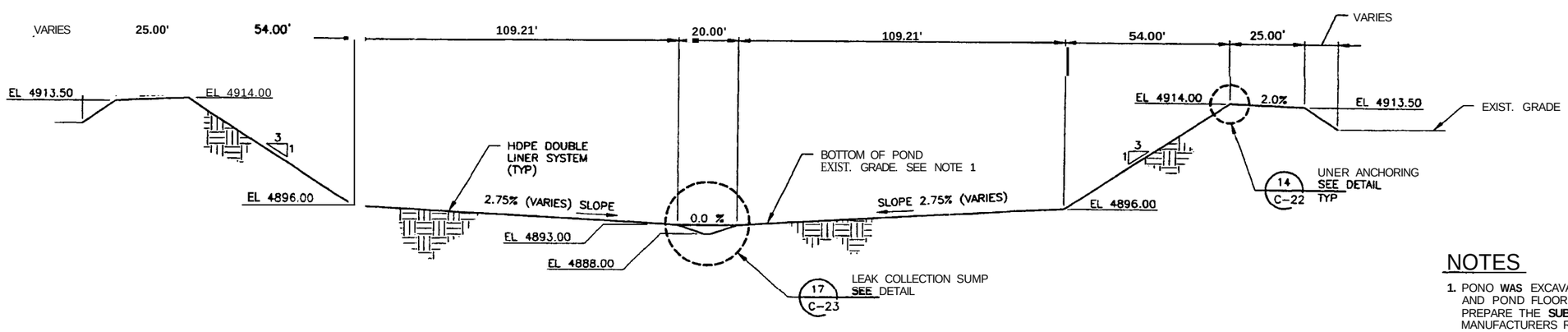

SECTION L C-19

SCALE: HORIZ: 1"=20.0'
VERT: 1"=10.0'

NOTES

1. PONO WAS EXCAVATED IN **2001.** MINOR DRESSING **OF** INTERIOR SLOPES AND POND FLOOR **IS** REQUIRED TO RE-ESTABLISH DESIGN GRADES AND PREPARE THE **SUBGRADE** IN ACCORDANCE **WITH** THE LINER MANUFACTURERS RECOMMENDATIONS.

PROFESSIONAL ENGINEER REGISTERED 9404 4/11/03 STATE OF IDAHO KURT D. FRITZ

FOR DRAWING INDEX SEE DRAWING NO. 623729	SUBCONTRACT NO. N/A	INEEL BECHTEL BWXT IDAHO, LLC
HORIZONTAL 1"=20.0'	REQUESTER: LEE DAVISON	INEEL OU 3-13 GROUP 1 TANK FARM INTERIM ACTION PHASE 1 EVAPORATION POND SECTIONS
VERTICAL 1"=10.0'	DESIGN: KURT FRITZ	
	DRAWN: ROB HERGESHEIMER	
	PROJECT NO. 020978	
	SPEC CODE	
DESIGN PHASE: AFC	FOR REVIEW/APPROVAL SIGNATURES SEE DAR NO. 100611	SIZE D · CAGE CODE 01MF3 · INDEX CODE NUMBER AREA 200 TYPE 1793 CL 02 ORG 090 · DWG-623750 · REV
QUALITY LEVEL: CG	EFFECTIVE DATE: 4/11/03	SCALE: NOTED · SHEET C-20

-01-REV 13
Layout Name: D Size
ID: MLW5
623750.dwg

REVISIONS		
REV	DESCRIPTION	EFFECTIVE DATE:

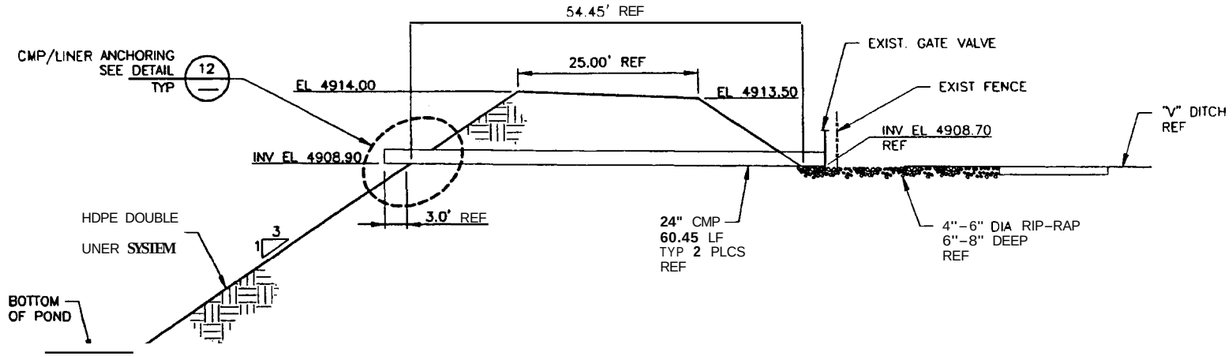

SECTION M C-19

SCALE: HORIZ: 1"=10.0' MRT 1"=5.0'

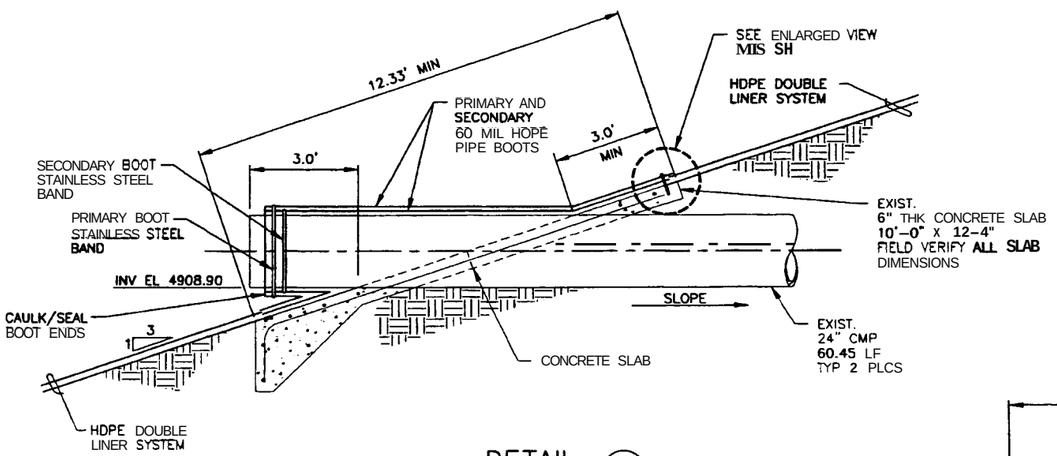

DETAIL 12 —

SCALE: 1"=2.0'

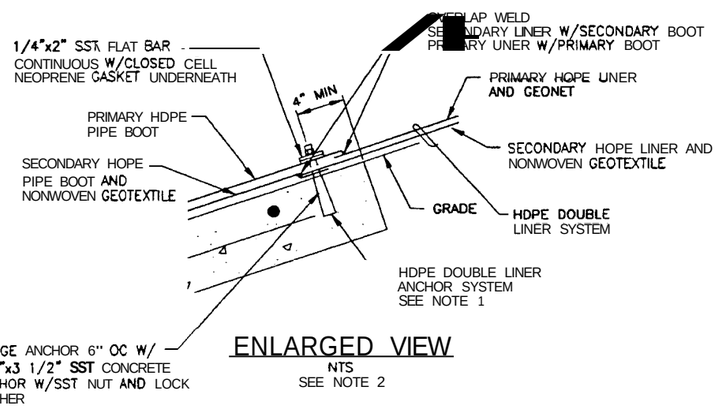

ENLARGED VIEW

NTS
SEE NOTE 2

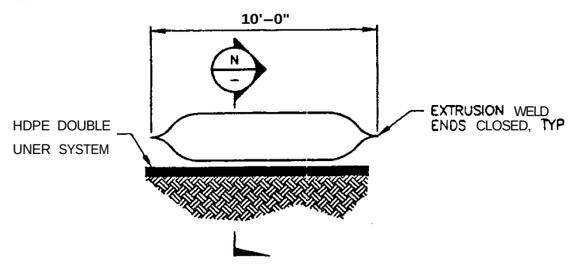

TYPICAL BALLAST TUBE DETAIL 13 —

REF C-19

NTS

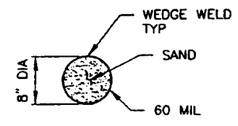

SCALE: NTS

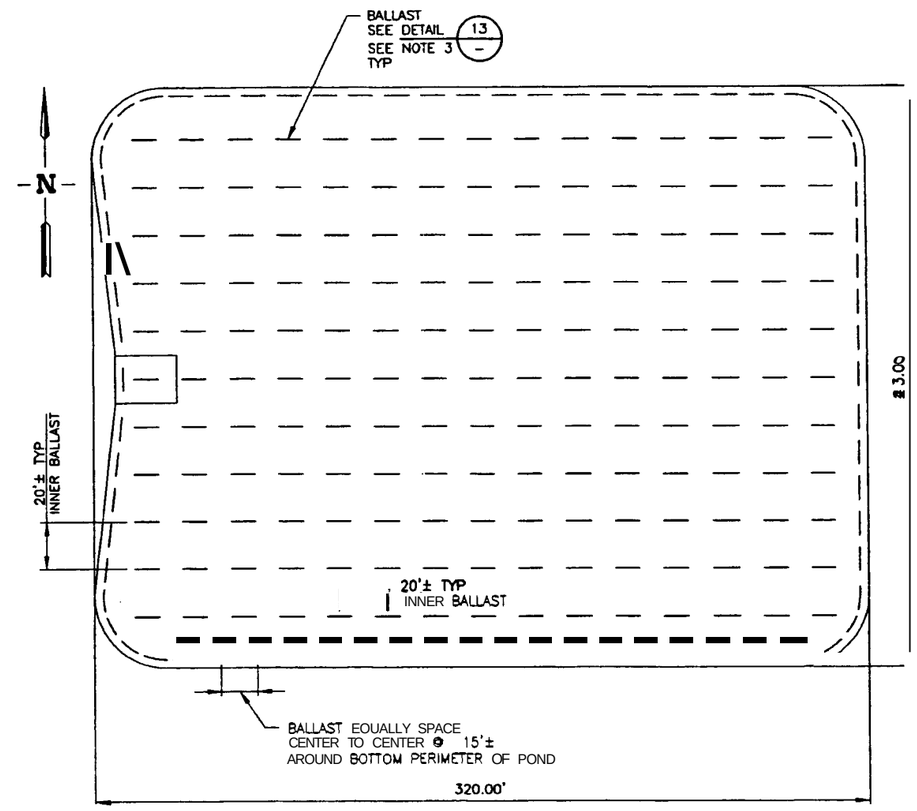

BALLAST TUBE LAYOUT PLAN

SCALE: 1"=30.0'

REF C-19

NOTES

1. FASTEN DOUBLE LINER SYSTEM TO CONCRETE USING MANUFACTURERS SPECIFIED ANCHORING SYSTEM OF CONCRETE ANCHORS AND BATTEN STRIPS.
2. INFORMATION CALLED OUT IN ENLARGED VIEW IS TYP OF ANCHORING AND OVERLAP WELDING ON ALL SIDES OF PIPE BOOT.
3. PLACE BALLAST AS SHOWN ON GRID LAYOUT PLAN UNDER DIRECTION OF THE UNER MANUFACTURER.

PROFESSIONAL ENGINEER REGISTERED 9404 4/11/03 STATE OF IDAHO KURT D. FRITZ

FOR DRAWING INDEX SEE DRAWING NO. 623729	SUBCONTRACT NO. N/A	INEEL BECHTEL BWXT IDAHO, LLC
SCALE: 1" = 2.0' / SCALE: 1" = 30.0'	REQUESTER: LEE DAVISON	INEEL OU 3-13 GROUP 1 TANK FARM INTERIM ACTION PHASE 1 EVAPORATION POND SECTIONS AND DETAILS
	DESIGN: KURT FRITZ	
	DRAWN: ROB HERGESHEIMER	
	PROJECT NO. 020978	
	SPCL CODE	
DESIGN PHASE: AFC	FOR REVIEW/APPROVAL SIGNATURES SEE DAR NO. 100611	SIZE D / CAGE CODE 01MF3 / INDEX CODE NUMBER AREA 200 TYPE 1793 CL 02 ORIG 090 / DWG-623751
SAFETY CATEGORY: CG	EFFECTIVE DATE: 4/11/03	SCALE: NOTED / SHEET C-21

File: 623751.dwg Path: G:\cds5\new-D Layout Name: D Size A Author: DWEEK BWXCORP03 - 11:19 A.M.

REV	DESCRIPTION	EFFECTIVE DATE

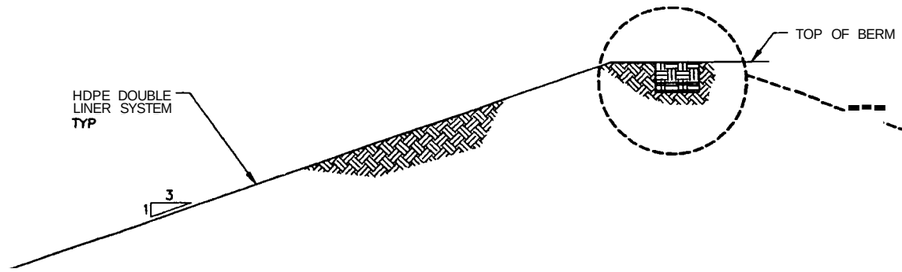

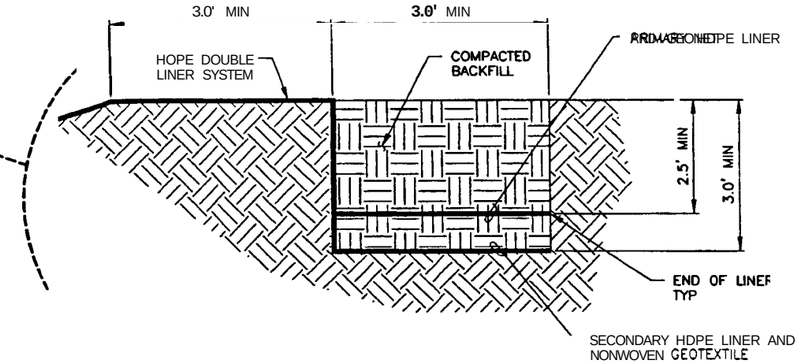

TYPICAL LINER ANCHORING DETAIL (14 / C-20)

SCALE: 1"=5.0'

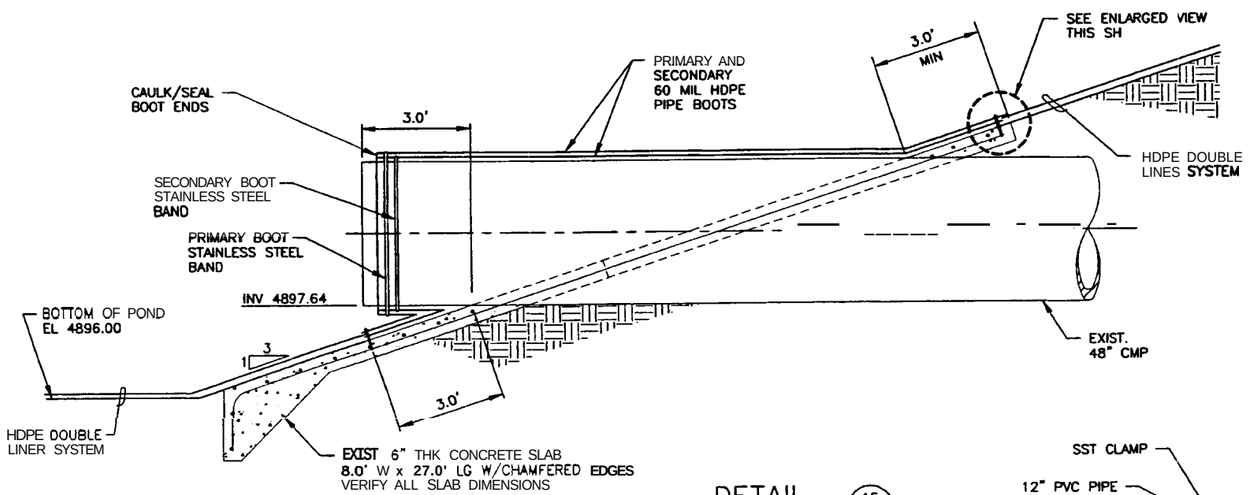

DETAIL (15 / C-19)

SCALE: 1"=2.0'

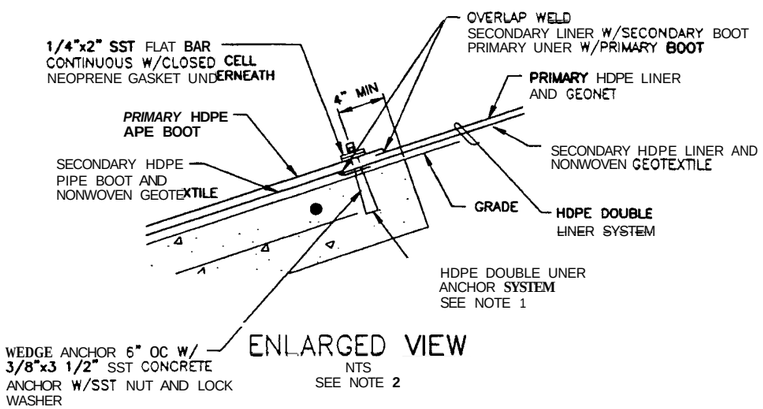

ENLARGED VIEW

NTS
SEE NOTE 2

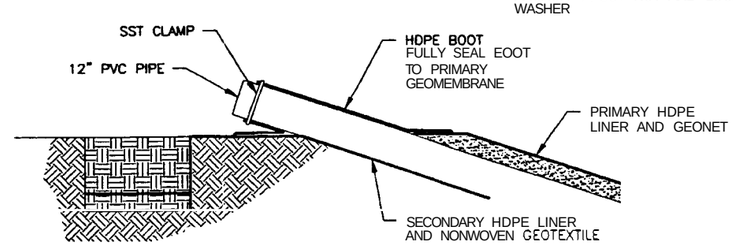

SUMP PIPE GEOMEMBRANE BOOT DETAIL (20 / C-24)

SCALE: NTS

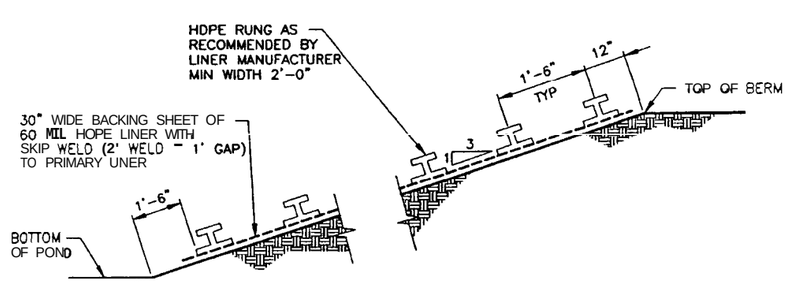

TYP SAFETY LADDER DETAIL (16 / c-19)

NTS

NOTES

1. FASTEN DOUBLE LINER SYSTEM TO CONCRETE USING MANUFACTURERS SPECIFIED ANCHORING SYSTEM OF CONCRETE ANCHORS AND BATTEN STRIPS.
2. INFORMATION CALLED OUT IN ENLARGED VIEW IS TYP OF ANCHORING AND OVERLAP WELDING ON *ALL* SIDES OF PIPE BOOT.

PROFESSIONAL ENGINEER REGISTERED 9404 4/11/03 STATE OF IDAHO KURT D. FRITZ

FOR DRAWING INDEX SEE DRAWING NO. 623729	SUBCONTRACT NO. N/A	INEEL — BECHTEL BWXT IDAHO, LLC
SCALE: 1" = 1.6	REQUESTER: LEE DAVISON	INEEL OU 3-13 GROUP 1 TANK FARM INTERIM ACTION PHASE 1 EVAPORATION POND DETAILS
SCALE: 1" = 5.0'	DESIGN: KURT FRITZ	
	DRAWN: ROB HERGESHEIMER	
	PROJECT NO. 020978	
	SPCL CODE	
DESIGN PHASE: AFC	FOR REVIEW/APPROVAL SIGNATURES SEE DAR NO. 100611	SIZE D; CAGE CODE 01MF3; INDEX CODE NUMBER AREA 200, TYPE 1793, CL 02, ORIG 090; DWG-623752; REV
SAFETY CATEGORY: CG	EFFECTIVE DATE: 4/11/03	SCALE: NOTED; SHEET C-22

Layout Name: D Size
ID: MLW5
Date: 11:51 A.M.
623732.dwg
C:\rdh5\new-phase1-tankfarm\QHBEKGWA\COMRD3

REV	DESCRIPTION	EFFECTIVE DATE
1	SEE DAR-101498	5/14/03

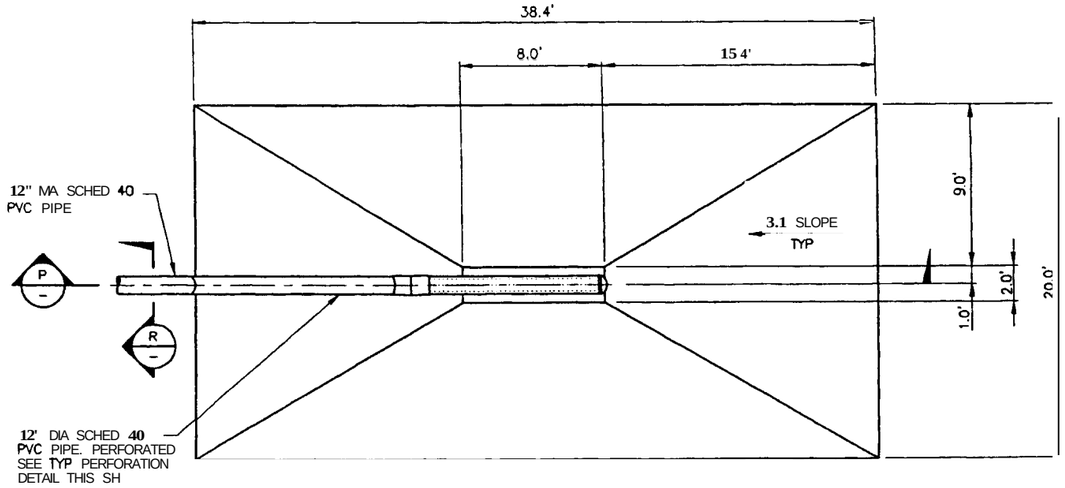

DETAIL (17) PEF
SCALE: 1"=4.0'

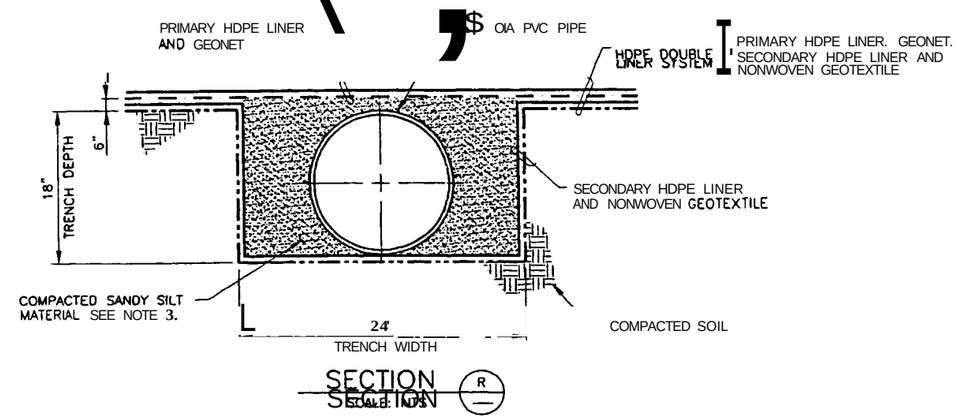

SECTION (R)
SCALE: NTS

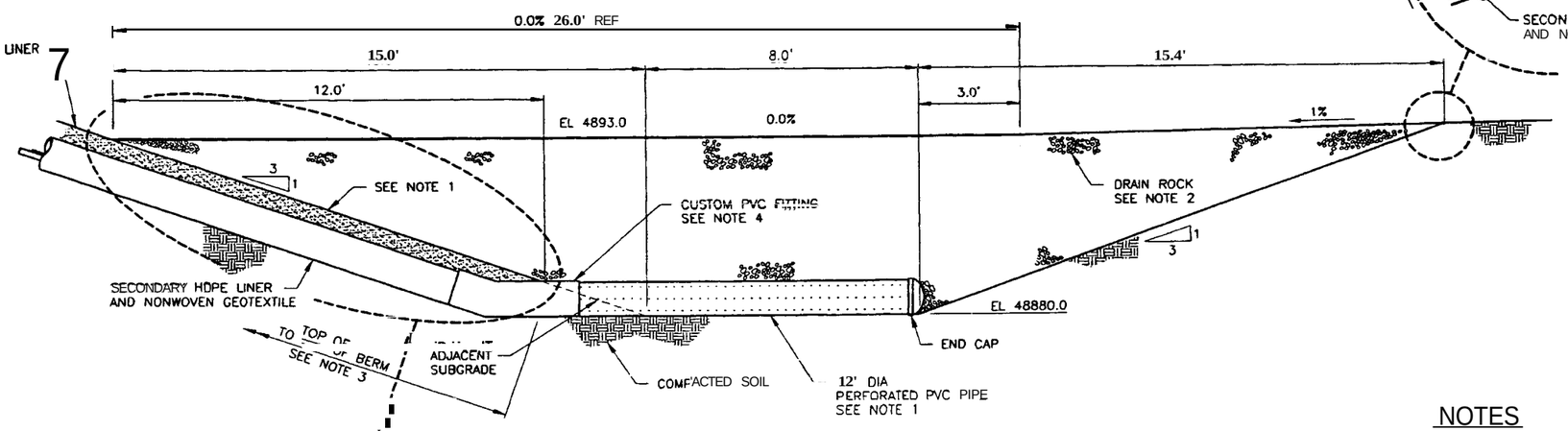

SECTION (P)
SCALE: 1"=2.0'

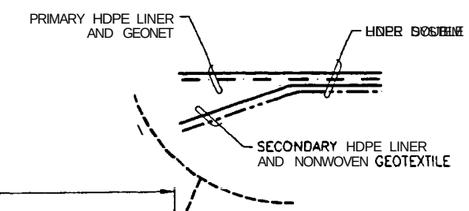

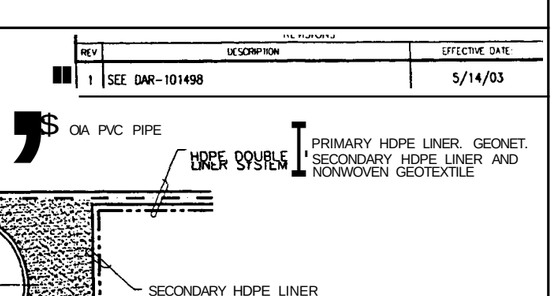

TYP PIPE PERFORATION DETAIL
SCALE. NTS

NOTES

1. NONWOVEN GEOTEXTILE SHALL BE PLACED AT THE POINT OF INTERFACE BETWEEN THE SANDY SILT BACKFILL AND THE DRAIN ROCK TO ELIMINATE FINES FROM FILLING IN THE VOIDS IN THE DRAIN ROCK.

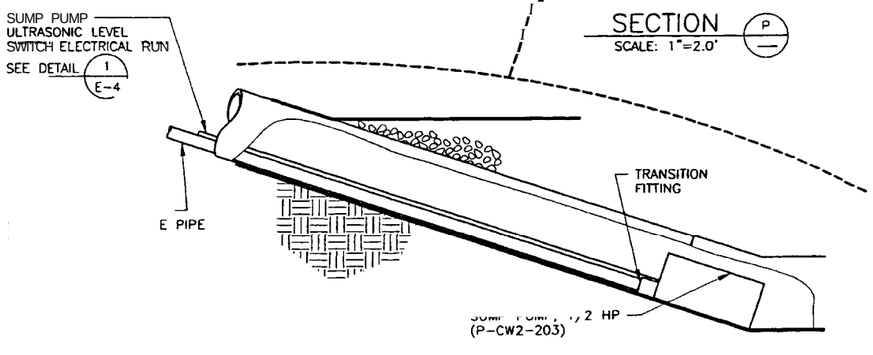

PROFESSIONAL ENGINEER REGISTERED 9404 5/14/03 STATE OF IDAHO KURT D. FRITZ

REQUESTER: LEE DAVISON
PROJECT NO. 020978
SPCL CODE

ef: 623753-1.dwg
Layout Name: D Size

REVISIONS		
REV	DESCRIPTION	EFFECTIVE DATE:

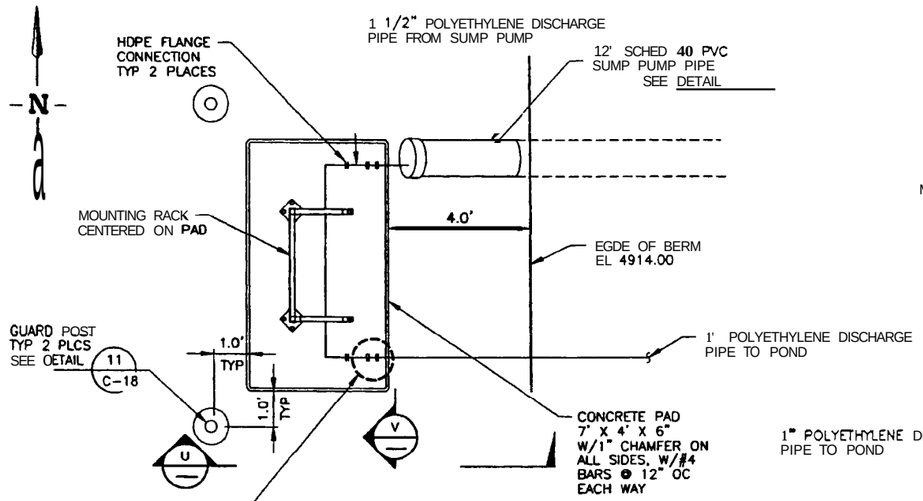

ENLARGED VIEW (T / C-19) REF C-20
SCALE: 1"=2.0'
(ELECTRICAL COMPONENTS OMITTED FOR CLARITY)

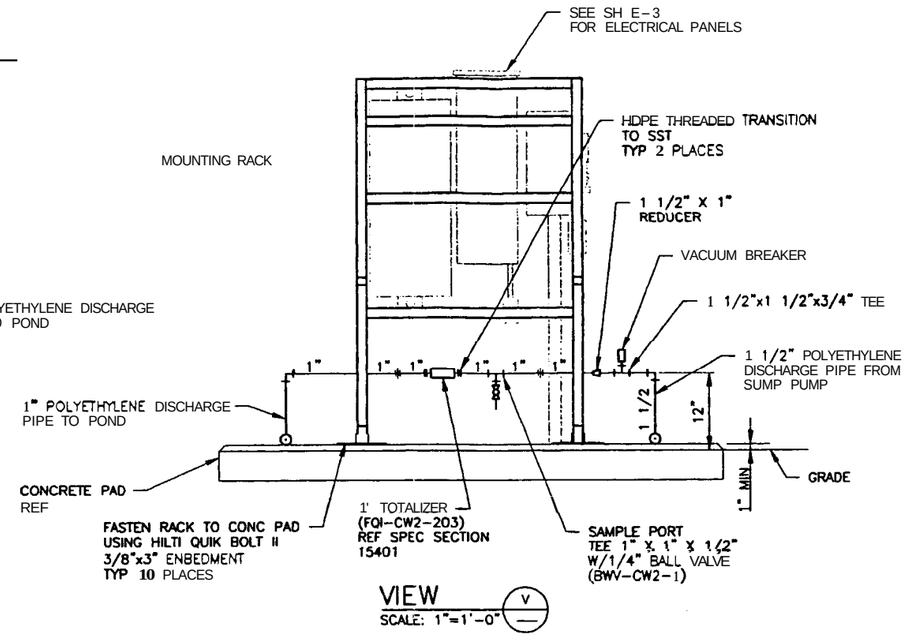

VIEW (V)
SCALE: 1"=1'-0"

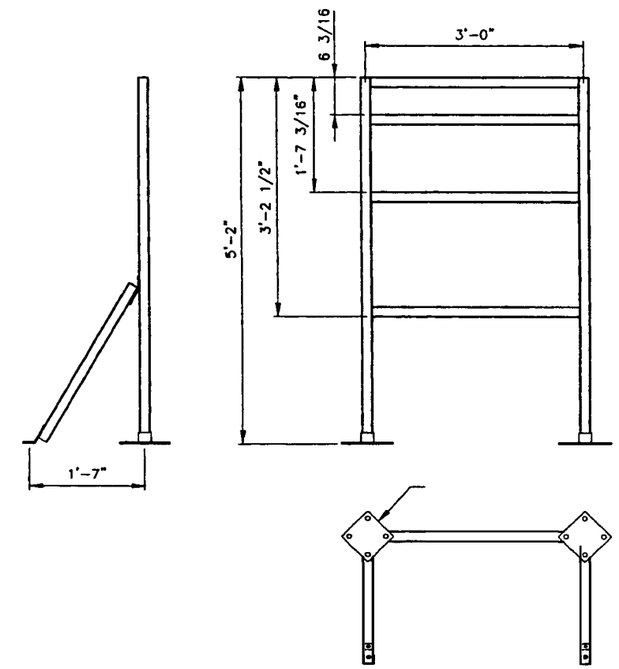

DETAIL (18) REF E-3 E-4
SCALE: 1"=1'-0"
SEE NOTE 1

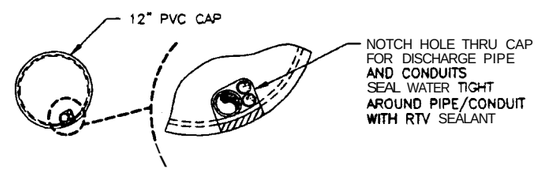

SECTION (Y)
SCALE: 1"=1'-0"

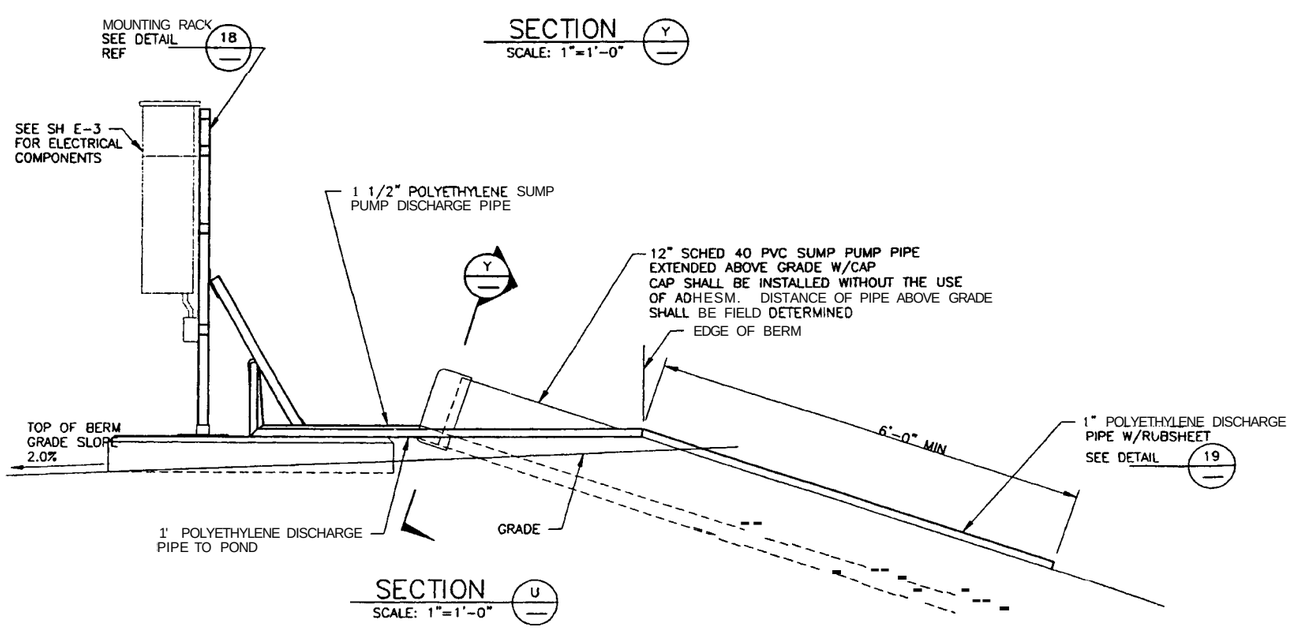

SECTION (U)
SCALE: 1"=1'-0"

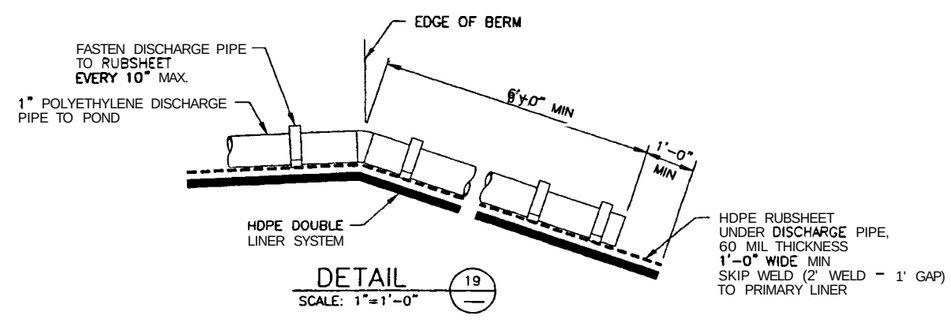

DETAIL (19)
SCALE: 1"=1'-0"

NOTES

1. SUPPORT RACK DETAIL SHOWN IS A PROPOSED CONFIGURATION. RACK SHALL BE CONSTRUCTED USING UNISTRUT P-1000 SERIES MATERIAL DIMENSIONS SHOWN ARE REFERENCE ONLY AND SHALL BE VERIFIED TO ENSURE PROPER SPACING FOR MOUNTING OF ALL ELECTRICAL/PIPING COMPONENTS.

PROFESSIONAL ENGINEER REGISTERED 7166 STATE OF IDAHO EDWARD C. ANDERSON

FOR DRAWING INDEX SEE DRAWING NO. 623729	SUBCONTRACT NO N/A	INEEL (CH2M-WG Idaho, LLC)
SCALE: 1" = 1'-0"	REQUESTER: LEE DAVISON	INEEL OU 3-13 GROUP 1 TANK FARM INTERIM ACTION PHASE 1
SCALE: 1' = 2.0'	DESIGN: EDWARD ANDERSON ROB HERGESHEIMER	EVAPORATION POND SECTION. VIEWS AND DETAILS
DESIGN - M.Y. AFC	PROJECT NO. 020079	SIZE D · CAGE CODE 01MF3 · INDEX CODE NUMBER AREA 200 TYPE 1793 CL 02 ORIG 090 · DWG-623754 · REV
SAFETY CATEGORY CG	SPEC. CODE	SCALE: NOTED · SHEET C-24
	FOR REVIEW/APPROVAL SIGNATURES SEE DAR NO. 100611	
	EFFECTIVE DATE: 4/11/03	

Layout Name: D Size
ID: MLW5
623754.dwg
G:\rdh5\new-sheet-inst\ANDERSON

REVISIONS		
REV	DESCRIPTION	EFFECTIVE DATE

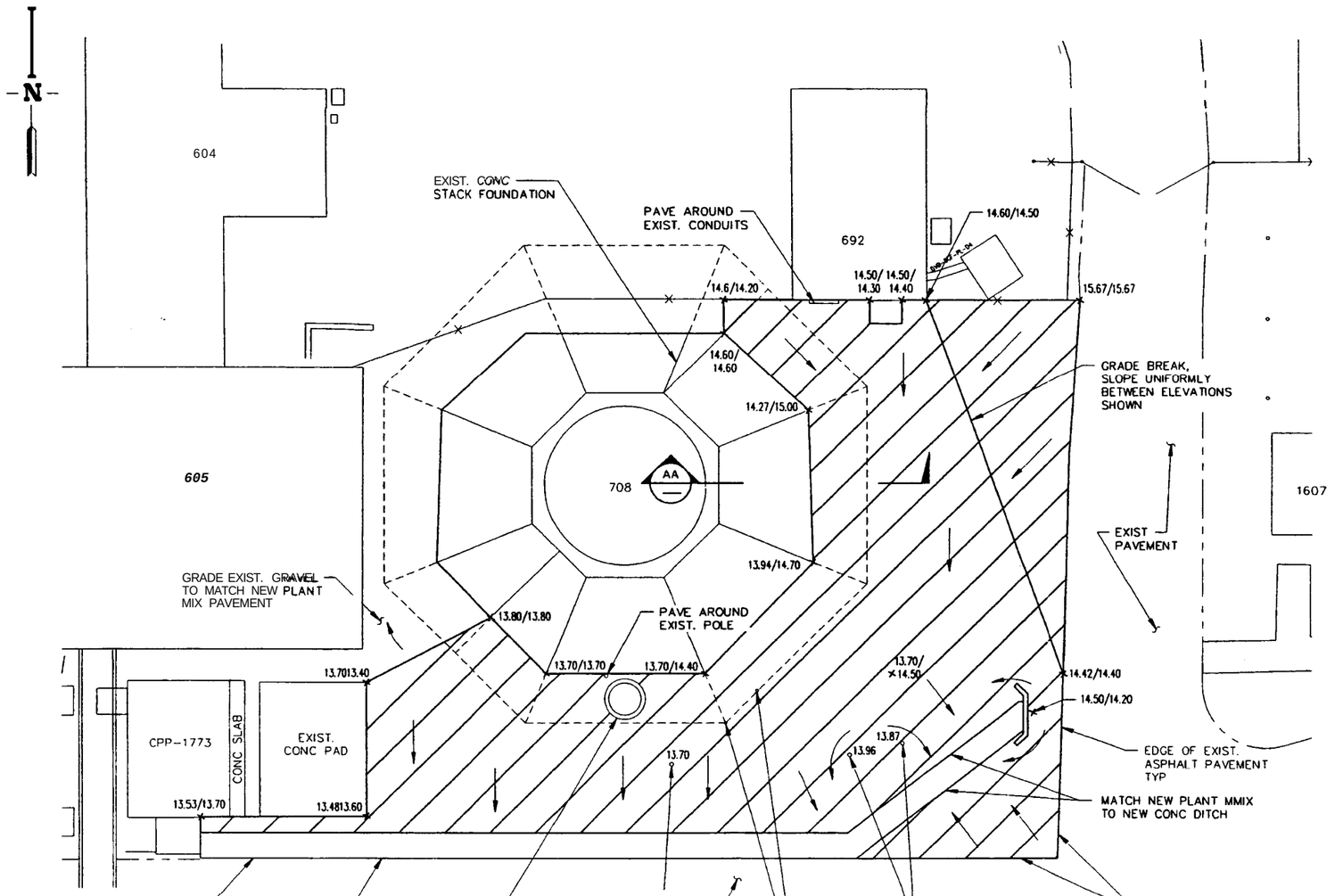

PAVING PLAN

SCALE. 1"=10.0'

LEGEND

NEW PLANT MIX PAVEMENT

UNIFORM SLOPE ARROW

× XX.XX/XX.XX FINISHED GRADE/EXIST. GRADE EL (ADD 4900.00)

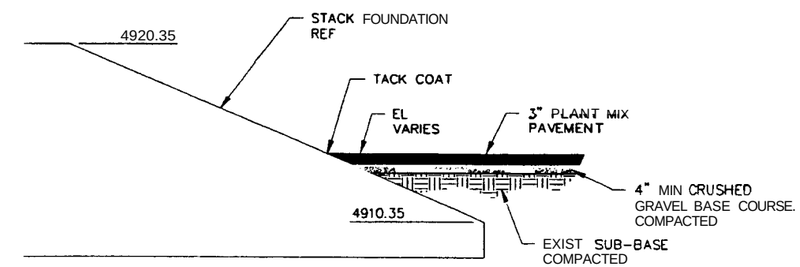

SECTION AA

SCALE NTS

NOTES

1. VERTICAL DATUM IS NRTS (0.35' HIGHER THAN INTEC DATUM)
2. SLOPE FINISHED SURFACE FROM TOP OF TEST WELLS 10 FEET AWAY TO MATCH GRADE WITH NEW PLANT MIX PAVEMENT. DRAINAGE SHALL BE TOWARDS NEW CONCRETE DITCH.

PROFESSIONAL ENGINEER REGISTERED 9404 4/11/03 STATE OF IDAHO KURT D. FRITZ

FOR DRAWING INDEX SEE DRAWING NO 623729	SUBCONTRACT NO N/A	INEEL BECHTEL BWXT IDAHO, LLC
SCALE: 1" = 10.0	REQUESTER: LEE DAVISON	INEEL OU 3-13 GROUP 1 TANK FARM INTERIM ACTION PHASE 1 PAVING PLAN
	DESIGN: KURT FRITZ	
	DRAWN: ROB HERGESHEIMER	
	PROJECT NO. 020978	
	SPCL CODE	
DESIGN PHASE AFC	FOR REVIEW/APPROVAL SIGNATURES SEE DAR NO 100611	SIZE D · CALC CODE 01MF3 · INDEX CODE NUMBER AREA 200 TYPE 0100 SL 02 DRW 090 · DWG- 623755 · REV
SAFETY CATEGORY: CG	EFFECTIVE DATE: 4/11/03	SCALE: NOTED · SHEET C-25

Layo: A CHECKING
623755.dwg
H:\new-phase

REVISIONS		
REV	DESCRIPTION	EFFECTIVE DATE

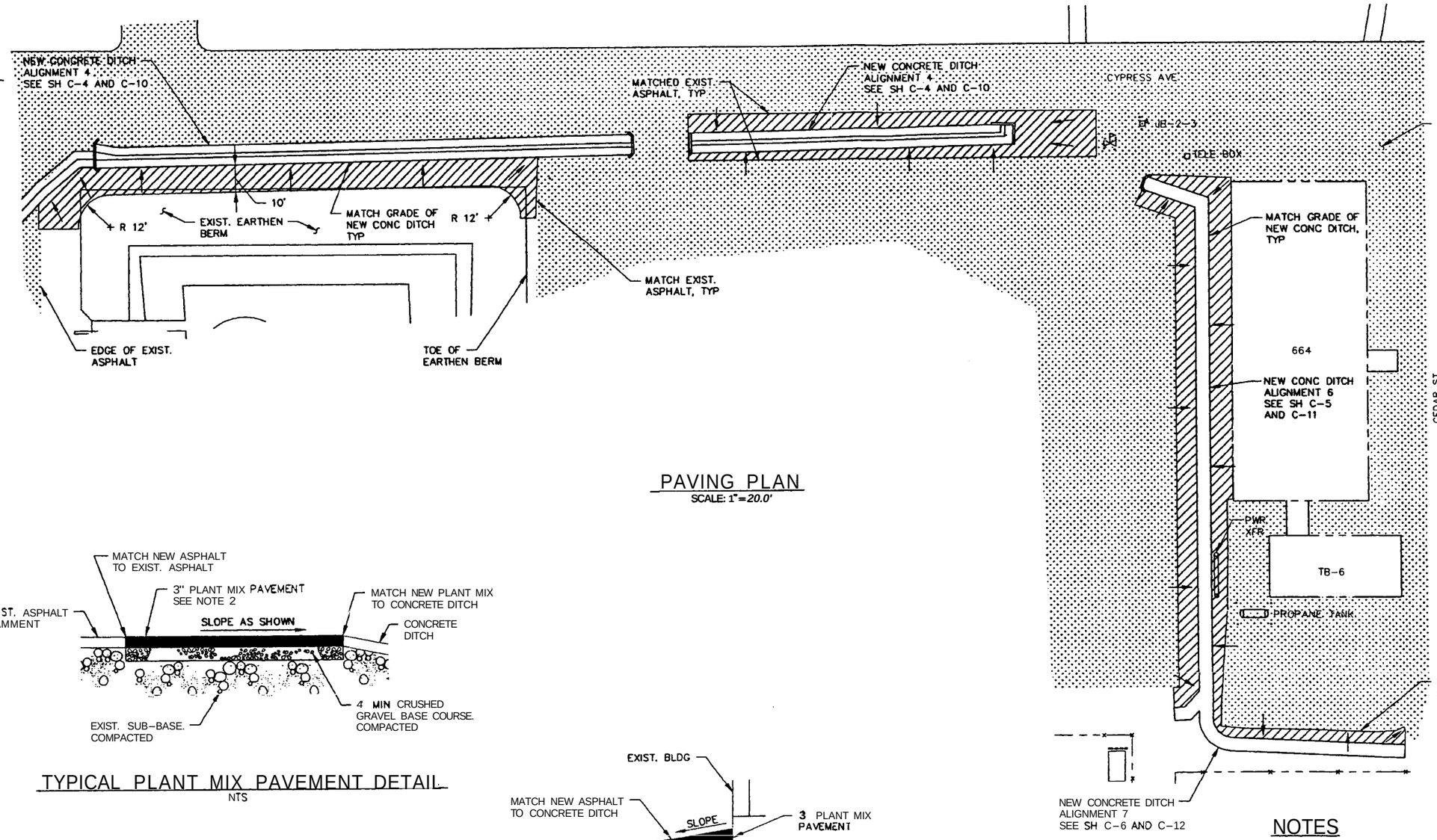

PAVING PLAN

SCALE: 1"=20.0'

LEGEND

- EXIST. ASPHALT PAVEMENT
- NEW PLANT MIX PAVEMENT
- UNIFORM SLOPE ARROW

TYPICAL PLANT MIX PAVEMENT DETAIL

NTS

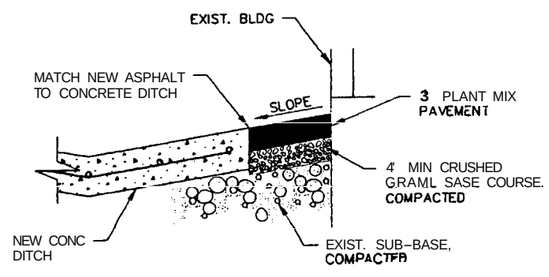

TYPICAL PLANT MIX PAVEMENT ADJACENT BLDG DETAIL

NTS

NOTES

1. HORIZONTAL COORDINATES ARE INTEC SITE SPECIFIC. VERTICAL DATUM IS NRTS (0.35' HIGHER THAN INTEC DATUM).
2. ALL AREAS RECEIVING PLANT MIX PAVEMENT SHALL HAM EXISTING PAVEMENT SAW CUT TO CLEAN STRAIGHT EDGES.
3. EDGES OF EXISTING PAVEMENT AND NEW PLANT MIX PAVEMENT SHAU HAVE A TACK COAT APPLIED PRIOR TO THE PLACEMENT OF NEW ASPHALT.

PROFESSIONAL ENGINEER REGISTERED 9404 4/11/03 STATE OF IDAHO KURT D. FRITZ

FOR DRAWING INDEX SEE DRAWING NO. 623729	SUBCONTRACT NO. N/A	INEEL LOCKHEED MARTIN IDAHO TECHNOLOGIES
20' 10' 5' 0 20' SCALE: 1" = 20.0'	REQUESTER: LEE DAVISON DESIGN: KURT FRITZ DRAWN: ROB HERGESHEIMER PROJECT NO. 020978 SPCL CODE	INEEL OU 3-13 GROUP 1 TANK FARM INTERIM ACTION PHASE 1 PAVING PLAN
DESIGN PHASE: AFC	FOR REVIEW/APPROVAL SIGNATURES SEE DAR NO. 100611	SIZE D · CAGE CODE 01MF3 · INDEX CODE NUMBER (AREA 200, TYPE 0100, Q 02, DRG 090) · DWG-623756 · REV
SAFETY CATEGORY: CG	EFFECTIVE DATE: 4/11/03	SCALE: NOTED · SHEET C-26

File: 623756.dwg ID: MLW5 Layout Name: Layout1
date: G:\cad\work-phase1-tank farm\623756\MLW5 - 11:09 A.M.

REVISIONS		
REV	DESCRIPTION	EFFECTIVE DATE:

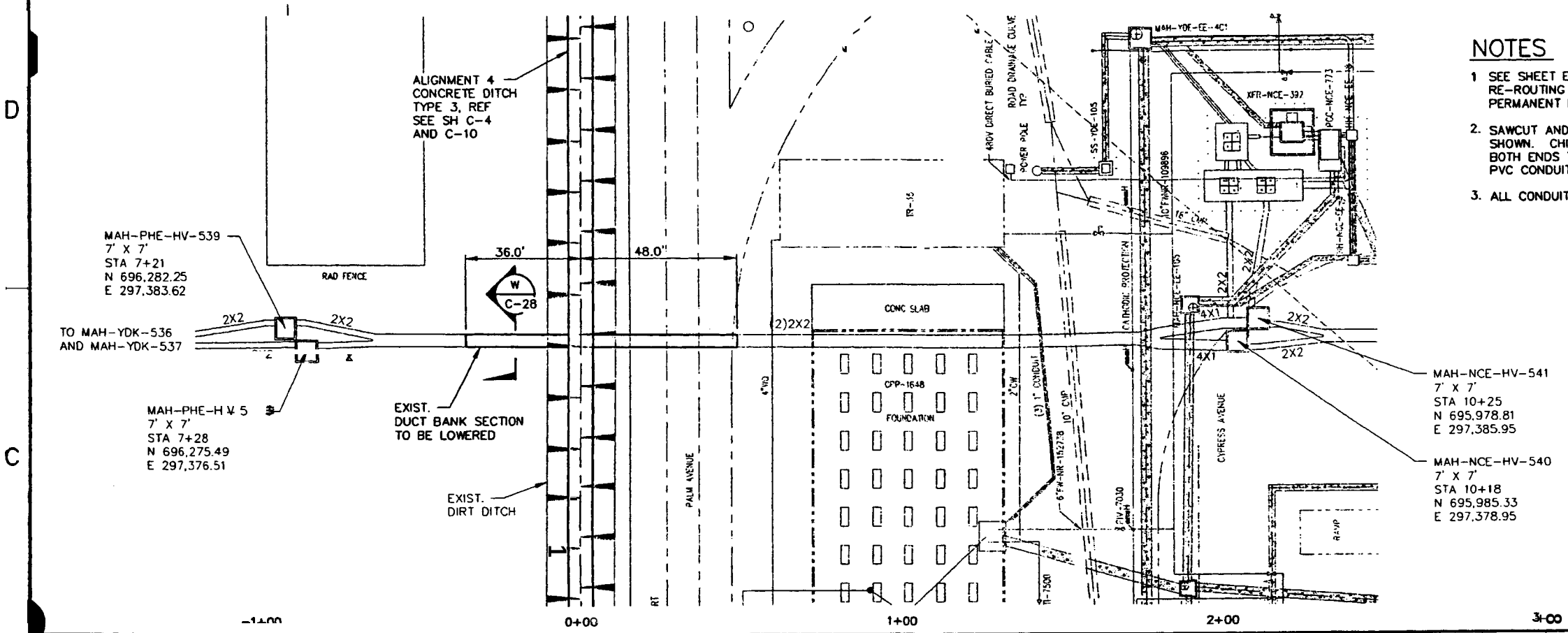

NOTES

1. SEE SHEET E-5 FOR TEMPORARY POWER FEED RE-ROUTING PLAN. SEE SHEET E-6 FOR PERMANENT FEED INSTALLATION.
2. SAWCUT AND REMOVE EXISTING DUCT BANK AS SHOWN. CHIP OR SAWCUT CONCRETE BACK AT BOTH ENDS TO EXPOSE ENOUGH OF THE EXISTING PVC CONDUITS TO ATTACH A COUPLER.
3. ALL CONDUIT BENDS SHALL BE 22.5 DEGREES.

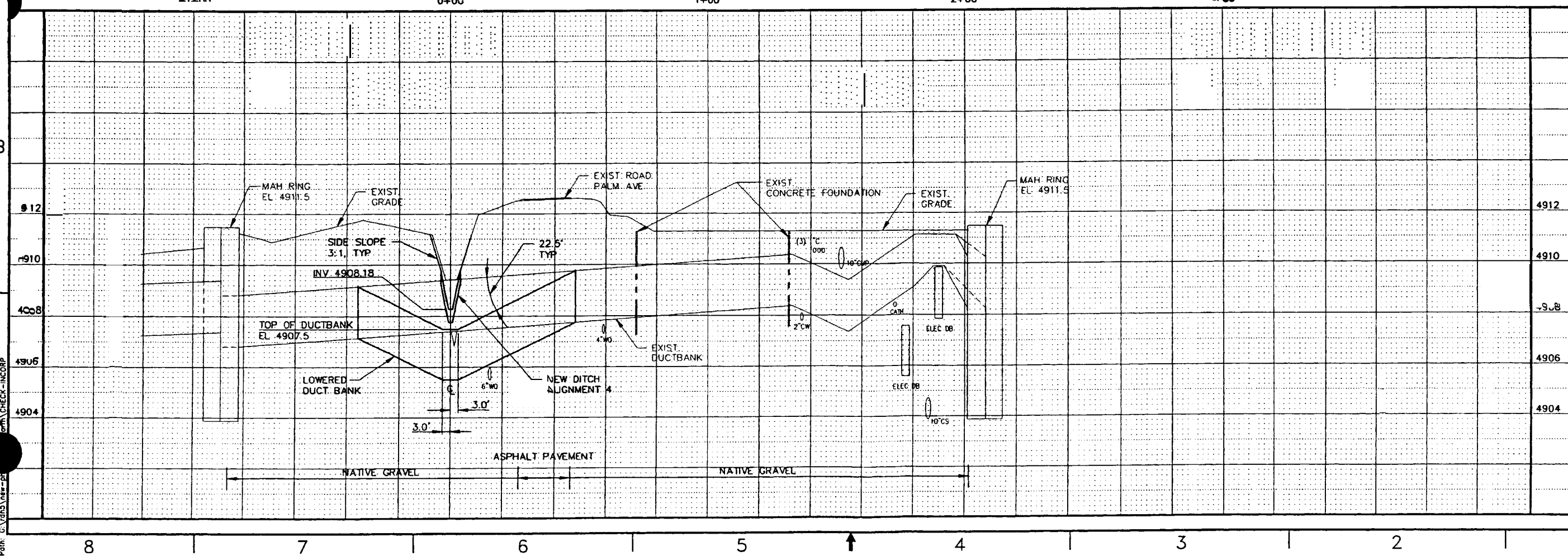

FOR DRAWING INDEX SEE DRAWING NO. 623729

HORIZONTAL SCALE 1"=20.0'

VERTICAL SCALE 1"=2.0'

DESIGN PHASE: AFC

SAFETY CATEGORY: CG

INEEL

INEEL
OU 3-13 GROUP 1
TANK FARM INTERIM ACTION
PHASE 1
ALIGNMENT 4 DUCT BANK MODIFICATION

SIZE D | CAGE CODE 01MF3 | WORK ORDER PROJ 200 | TASK 0100 | SEQ 02 | DISC 090 | DWG- 623757 | REV | SHEET C-27

SCALE: SEE HORIZONTAL & VERTICAL

SUBCONTRACT NO. N/A

REQUESTOR: LEE DAVISON

DESIGN: KURT FRITZ

DRAWN: ROB HERGESHEIMER

PROJECT NO. 020978

SPCL CODE

FOR REVIEW/APPROVAL SIGNATURES SEE DAR NO. 100611

EFFECTIVE DATE: 2/18/03

PROFESSIONAL ENGINEER REGISTERED KURT D. FRITZ STATE OF IDAHO 04/11/03

File: 623757.dwg
Path: G:\rdh5\new-pl
Date: 04/11/03 - 11:17 A.M. | Layout Name: Layout1
CHECK-INCORP
ID: MLW3

REVISIONS		
REV	DESCRIPTION	EFFECTIVE DATE:

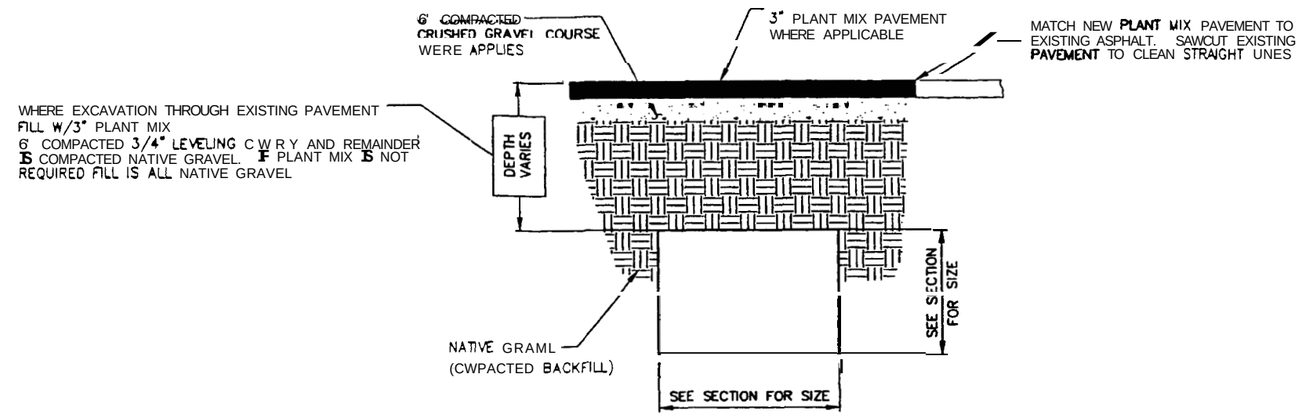

TYPICAL DUCT BANK DETAIL

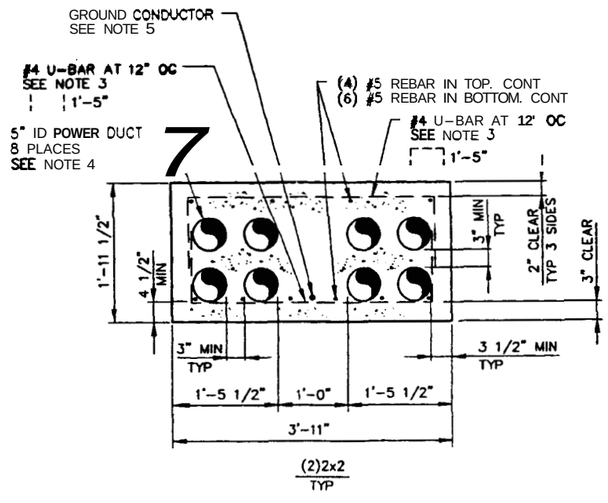

SECTION W C-27

NOTES

1. 5" DUCT IS 5 1/2" OD AND MUST BE TAKEN INTO CONSIDERATION FOR PROPER COVER AND CLEARANCE.
2. DUCT BANK CONCRETE SHALL BE 4000 PSI.
3. PROVIDE 1" MIN CONCRETE COVER BETWEEN REBAR AND CONDUITS.
4. INSTALL GREENLEE TRUE TAPE IN DUCTS.
5. EXPOSE AND SPUCE THE #2/0 BARE STRANDED COPPER GROUNDING CONDUCTOR AT EACH END SECTION OF DUCT BANK PRIOR TO PLACING THE CONCRETE. LAY M E CONDUCTOR ON TOP. OR SUSPEND IT FROM THE REBAR CAGE. TIE TO THE REBAR AS REQUIRED TO HOLD THE GROUNDING CONDUCTOR IN PLACE DURING M E CONCRETE POUR.

PROFESSIONAL ENGINEER REGISTERED 9404 4/11/03 STATE OF IDAHO KURT D. FRITZ

FOR DRAWING INDEX SEE DRAWING NO. 623739	SUBCONTRACT NO. N/A	INEEL BECHTEL BWXT IDAHO, LLC
SCALE: 1" = 1'-0"	REQUESTER: LEE DAVISON DESIGN: KURT FRITZ DRAWN: ROB HERGESHEIMER PROJECT NO. 020978 SPCL CODE	INEEL OU 3-13 GROUP 1 TANK FARM INTERIM ACTION PHASE 1 SECTION AND DETAIL
DESIGN PHASE: AFC	FOR REVIEW/APPROVAL SIGNATURES SEE DAR NO. 100611	SIZE D · CAGE CODE 01MF3 · INDEX CODE NUMBER AREA 200 TYPE 0100 G 62 DWG 090 · DWG-623758 · REV
SAFETY CATEGORY: CG	EFFECTIVE DATE: 4/11/03	SCALE: 1"=1'-0" · SHEET C-28

File: 623758.dwg Path: G:\cad\Year-phase1-tank\cad\ID: JALW5 Layout Name: D Size KBHCOX03 - 11:17 A.M.

REV	DESCRIPTION	EFFECTIVE DATE:

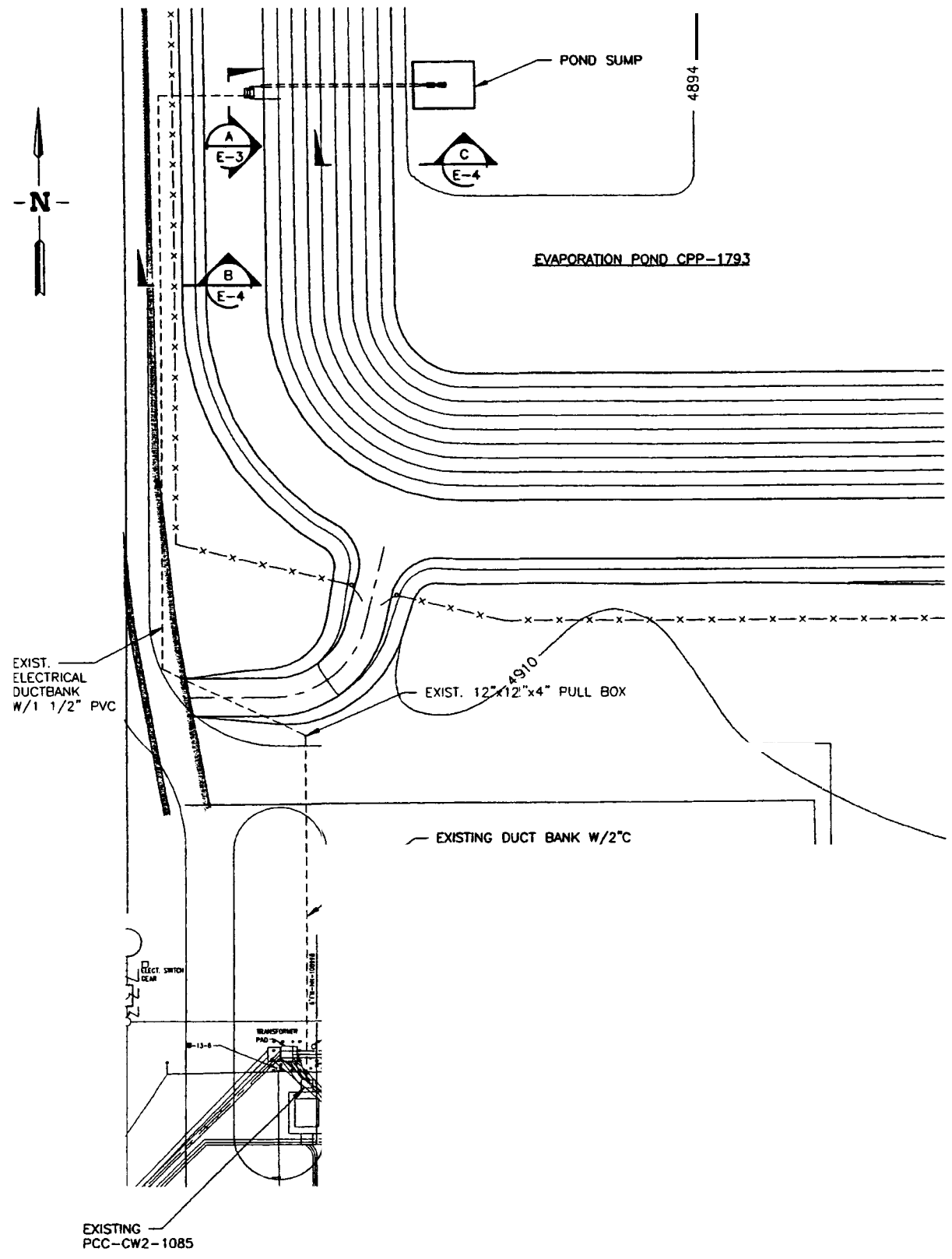

X-REF DRAWING

623766

FOR DRAWING INDEX SEE DRAWING NO. 623729	SUBCONTRACT NO. N/A	INEEL LOCKHEED MARTIN IDAHO, LLC
30' 20' 10' 0 30' SCALE: 1" = 30.0'	REQUESTOR: LEE DAVISON DESIGN: JAMES ZOLYNSKI DRAWN: ROB HERGESHEIMER PROJECT NO. 020978 SPCL CODE	INEEL OU 3-13 GROUP 1 TANK FARM INTERIM ACTION PHASE 1 PARTIAL ELECTRICAL PLAN
DESIGN PHASE: AFC SAFETY CATEGORY: CG	FOR REVIEW/APPROVAL SIGNATURES SEE DAR NO. 100611 EFFECTIVE DATE: 4/11/03	SIZE D · CAGE CODE 01MF3 · INDEX CODE NUMBER: AREA 200, TYPE 1793, CL 10, DWG 090 · DWG-623759 · REV · SHEET F-1 · SCALE: NOTED

PROFESSIONAL ENGINEER REGISTERED 9674 4-11-03 STATE OF IDAHO JAMES D. ZOLYNSKI

Layout Name: LAYOUT-1
AM, DWDEK-ENCORD3 - 11:16 A.M.
File: 623759.dwg
Path: C:\rdn5\new-phase

REVISIONS		
REV	DESCRIPTION	EFFECTIVE DATE:

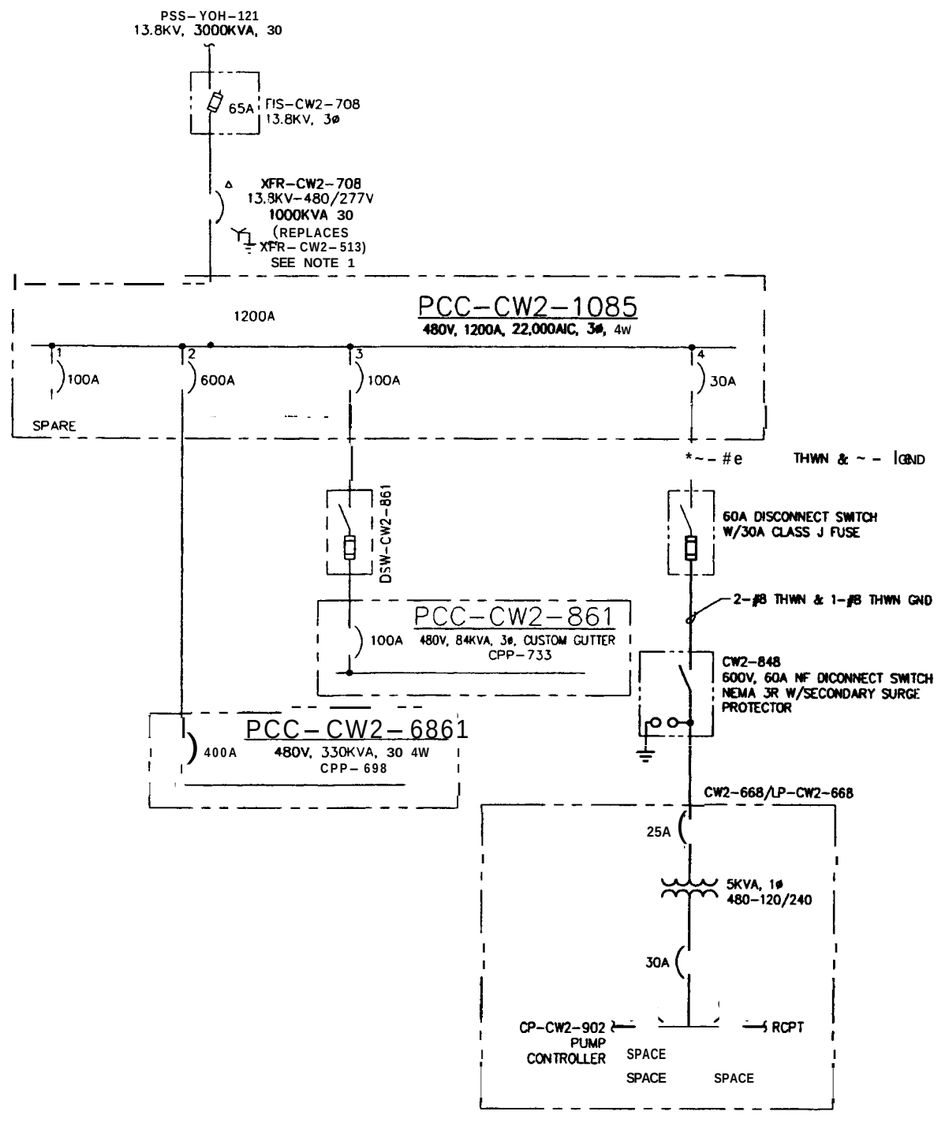

FOR DRAWING INDEX SEE DRAWING NO. 623729	SUBCONTRACT NO. N/A	INEEL BECHTEL BWXT IDAHO, LLC
NO SCALE	REQUESTER: LEE DAVISON DESIGN: JAMES ZOLYNSKI DRAWN: ROB HERGESHEIMER PROJECT NO. 020978 SPCL CODE	INEEL OU 3-13 GROUP 1 TANK FARM INTERIM ACTION PHASE 1 PCC-CW2-1085 ONE LINE DIAGRAM
DESIGN PHASE: AFC	FOR REVIEW/APPROVAL SIGNATURES SEE DAR NO. 100611	SIZE D · CAGE CODE 01MF3 · INDEX CODE NUMBER AREA 200 TYPE 0400 CL 10 ORG 090 · DWG-623760 · REV
SAFETY CATEGORY: CG	EFFECTIVE DATE: 4/11/03	SCALE: NONE · SHEET E-2

PROFESSIONAL ENGINEER REGISTERED 9614 STATE OF IDAHO JAMES D. ZOLYNSKI 4-11-03

File: 623760.dwg ID: MLW5 Drawn in Model Space
Path: G:\rdn3\new-phase1-tank\dwg\ CHECK-GMACORR03 - 11:16 A.M.

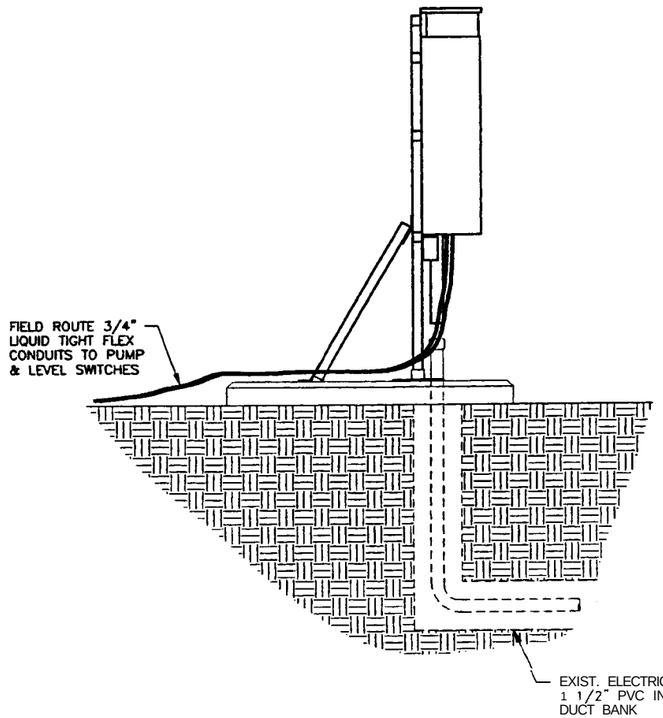

SIDE

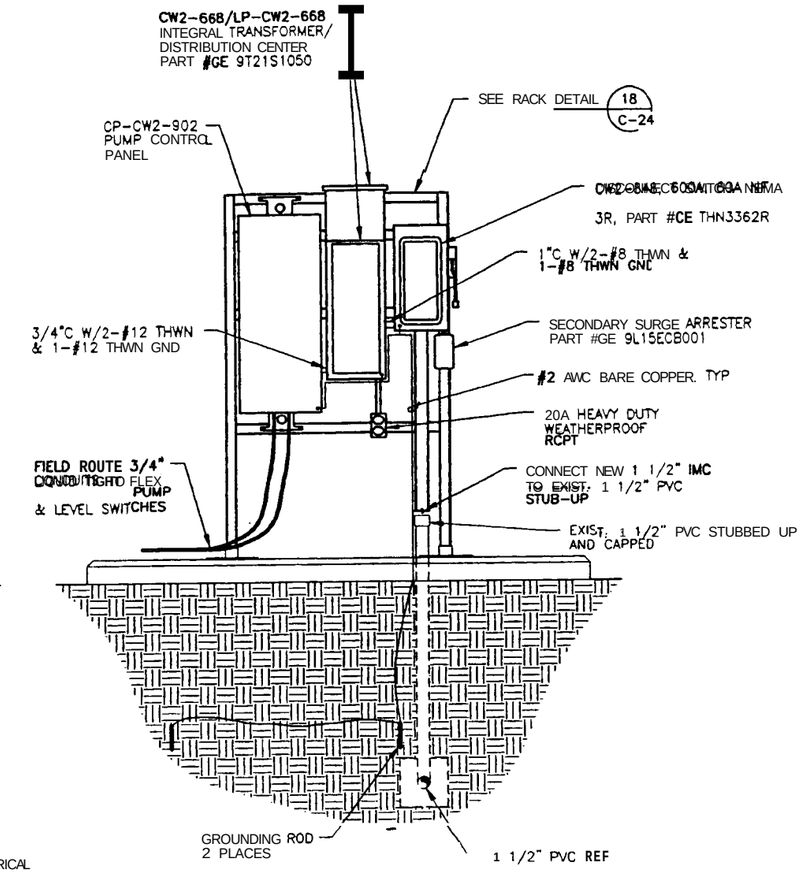

FRONT

VIEW A E-1

NOTES

1. FOR ONE LINE DIAGRAM SEE SHEET E-2.

PROFESSIONAL ENGINEER REGISTERED 4-11-03 STATE OF IDAHO JAMES D. ZOLYNSKI

FOR DRAWING INDEX SEE DRAWING NO. 623729	SUBCONTRACT NO. N/A	INEEL BECHTEL BWXT IDAHO, LLC
SCALE: 1" = 1'-0"	REQUESTER: LEE DAVISON	INEEL OU 3-13 GROUP 1 TANK FARM INTERIM ACTION PHASE 1 MOUNTING RACK VIEW
	DESIGN: JAMES ZOLYNSKI	
	DRAWN: ROB HERGESHEIMER	
	PROJECT NO. 020978	
	SPCL CODE	
DESIGN PHASE: AFC	FOR REVIEW/APPROVAL SIGNATURES SEE DAR NO. 100611	SIZE D · CAGE CODE 01MF3 · INDEX CODE NUMBER AREA 200 TYPE 1793 CL 10 DRG 090 · DWG-623761 · REV
SAFETY CATEGORY: CG	EFFECTIVE DATE: 4/11/03	SCALE: 1"=1'-0" · SHEET E-3

File: 623761.dwg
Path: G:\Civil\View-plot\
Layout Name: D Size
Plotted By: GWEBIKE@CWRO3 - 11:15 AM

REVISIONS		
REV	DESCRIPTION	EFFECTIVE DATE:

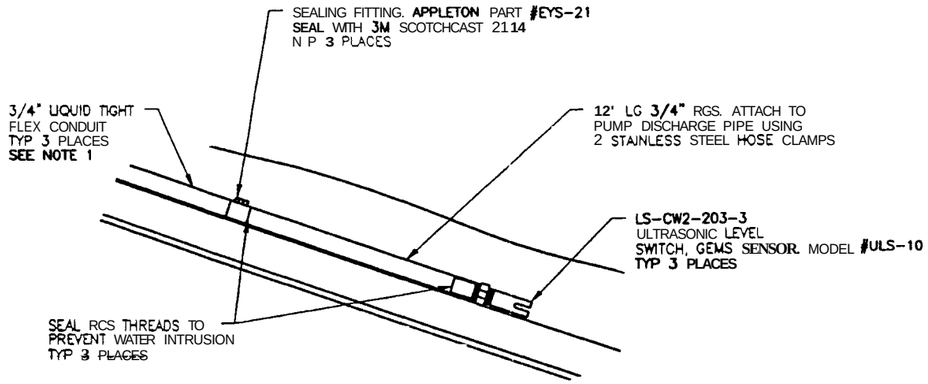

ULTRASONIC LEVEL SWITCH DETAIL (1/1 C-23)
SCALE: 3"=1'-0"

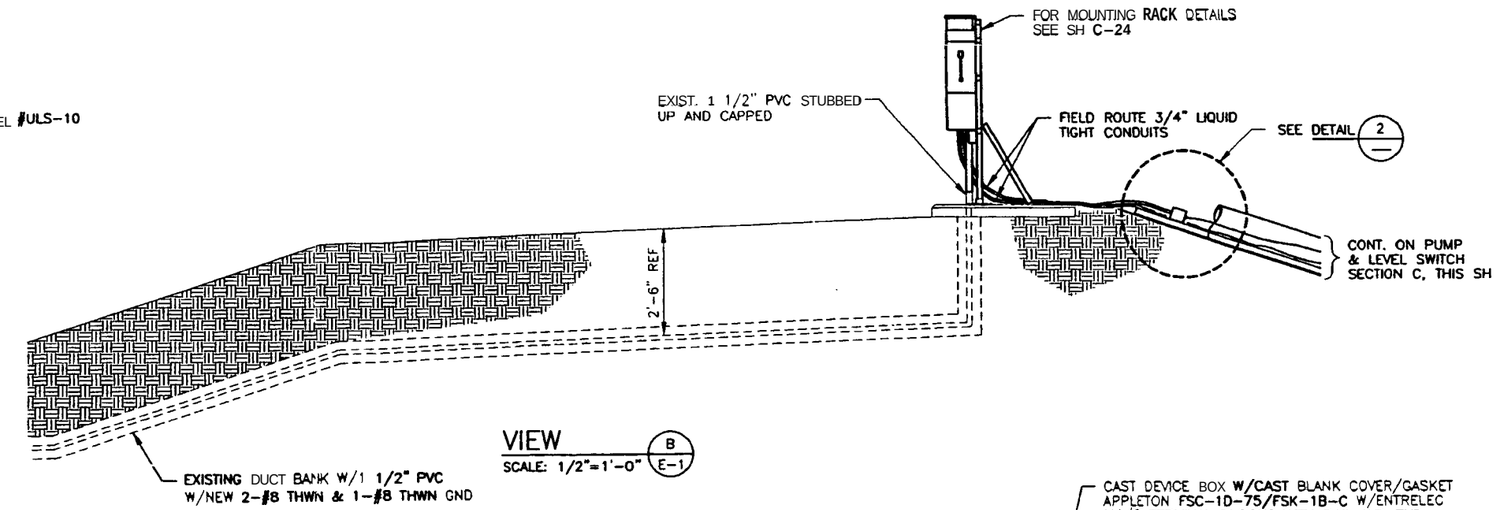

VIEW (B/E-1)
SCALE: 1/2"=1'-0"

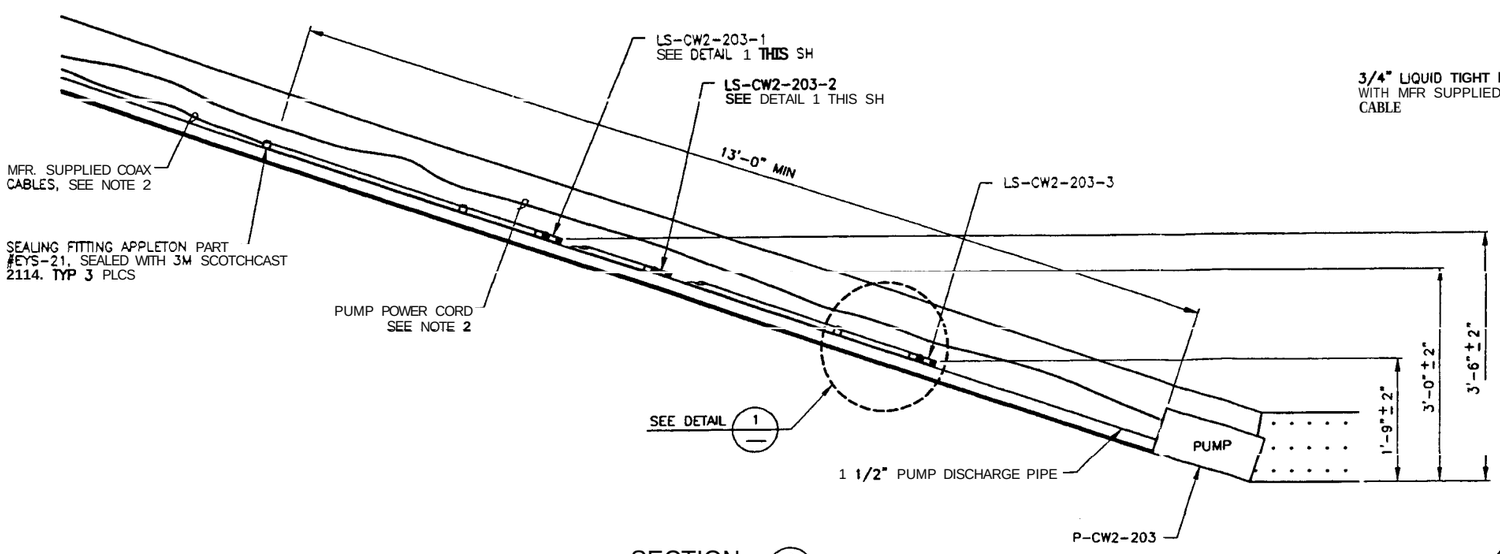

SECTION (C/E-1)
SCALE 1"=1'-0"

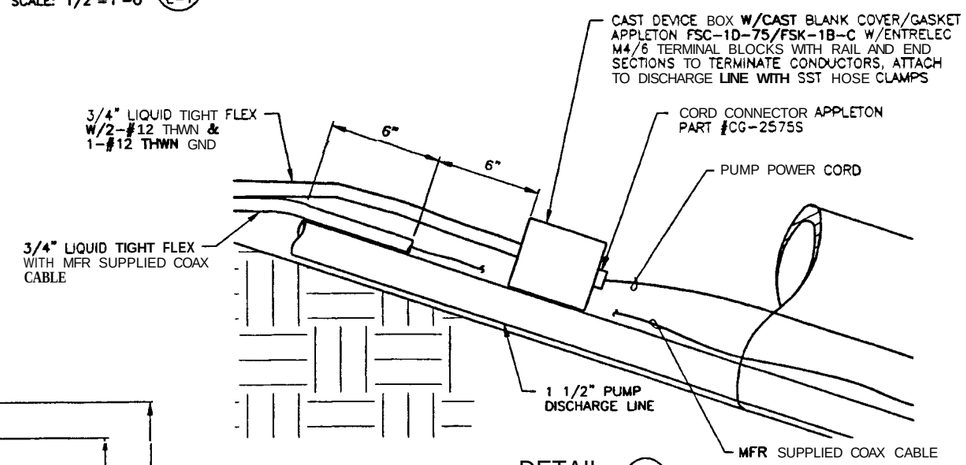

DETAIL (2/-)
1/4"=1'-0"

NOTES

1. ATTACH 3/4" LIQUID TIGHT FLEX CONDUITS TO 1 1/2" PUMP DISCHARGE LINE WITH SST HOSE CLAMPS.
2. ATTACH PUMP POWER CORD AND LEVEL SWITCH COAX CABLE TO 1 1/2" PUMP DISCHARGE LINE WITH SST HOSE CLAMPS 3'-0" O.C. MAXIMUM. PROTECT CABLE JACKETS FROM DAMAGE CAUSED BY CLAMPS USING RUBBER.

SCALE: 1/2" = 1'-0"

PROFESSIONAL ENGINEER REGISTERED 9614 STATE OF IDAHO 4-11-03 JAMES D. ZOLYNSKI

FOR DRAWING INDEX SEE DRAWING NO. 623729	SUBCONTRACT NO. N/A	INEEL (BECHTEL BWXT IDAHO, LLC)
SCALE: 3" = 1'-0"	REQUESTER: LEE DAVISON	INEEL OU 3-13 GROUP 1 TANK FARM INTERIM ACTION PHASE 1 VIEW, DETAILS AND SECTION
SCALE: 1" = 1'-0"	DESIGN: JAMES ZOLYNSKI	
	DRAWN: ROB HERGESHEIMER	
	PROJECT NO. 020978	
	SPCL CODE	
DESIGN PHASE: AFC	FOR REVIEW/APPROVAL SIGNATURES SEE DAR NO. 100611	SIZE D · CAGE CODE 01MF3 · INDEX CODE NUMBER AREA 200 TYPE 1793 CL 10 ORG 090 · DWG-623762 · REV
SAFETY CATEGORY: CG	EFFECTIVE DATE: 4/11/03	SCALE: NOTED · SHEET E-4

File: 623762.dwg ID: MLWS Layout Name: D Size
Path: G:\rch3\nes-phase1-tank\dwg\ DATE: 04/11/03 - 11:15 A.M.

REVISIONS		
REV	DESCRIPTION	EFFECTIVE DATE:

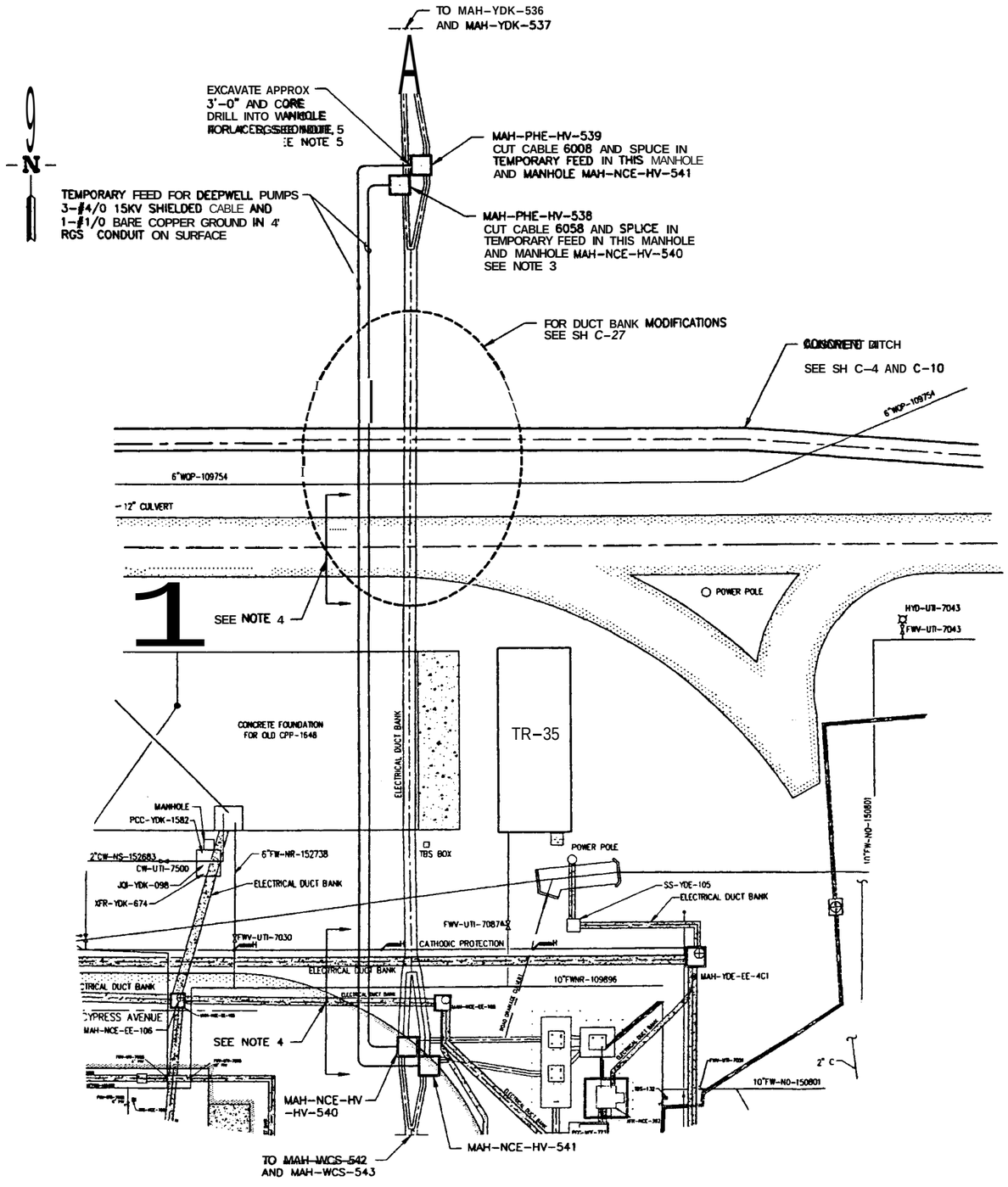

TEMPORARY FEED INSTALLATION PLAN

SCALE: 1"=20.0'

NOTES

1. ELECTRICAL SERVICE TO THE DEEPWELL PUMPS P-UTI-670 AND P-UTI-671 SHALL NOT BE WORKED SIMULTANEOUSLY. ONE PUUP SHALL BE KEPT IN OPERATION AT ALL TIMES. PUMPS ARE OPERATED IN A "MONTH ON-MONTH OFF' SCHEDULE AT TIME OF CONSTRUCTION THE PUMP IN THE 'OFF' SCHEDULE SHAU HAM TEMPORARY FEED INSTALLED FIRST. PRIOR TO CONSTRUCTION INTEC OPERATIONS SHAU BE CONTACTED.
2. DEEPWELL PUMPS P-UTI-670 AND P-UTI-671 ARE FED FROM SUBSTATION 60 CIRCUIT BREAKERS CB08 AND CB58. SEE ATTACHED REFERENCE ONE LINE DIAGRAM DRAWING. 185249.
3. LEAVE 15'-0' MINMUM OF CABLES 6008 AND 6058 IN MANHOLES TO ALLOW FOR SPLICING AND PROPER ROUTING WITHIN MANHOLE.
4. *AREA* SHALL HAM TRAFFIC RESTRICTIONS TO PROTECT TEMPORARY FEEDS AND EXCAVATIONS. ALL TRAFFIC *CONTROL* DEVICES SHALL BE INSTALLED IN ACCORDANCE WITH THE MANUAL ON UNIFORM TRAFFIC CONTROL DEVICES (MUTCD). ISSUED BY THE U.S. DEPARTMENT OF
5. PRIOR TO CORE DRIWNG INTO WHOLE. INSIDE WALL SHALL BE INSPECTED TO ENSURE WALL IS FREE OF ALL ELECTRICAL CABLES.

PROFESSIONAL ENGINEER REGISTERED D. J. ZOLYNSKI 9614 4-11-03 STATE OF IDAHO JAMES D. ZOLYNSKI

FOR DRAWING INDEX SEE DRAWING NO. 623729	SUBCONTRACT NO. N/A	INEEL (BECHTEL BWXT IDAHO, LLC)
SCALE: 1" = 20.0'	REQUESTER: LEE DAVISON	INEEL OU 3-13 GROUP 1 TANK FARM INTERIM ACTION PHASE 1 P-UTI-670 AND P-UTI-671 TEMPORARY FEED INSTALLATION
	DESIGN: JIM ZOLYNSKI	
	DRAWN: ROB HERGESHEIMER	
	PROJECT NO. 020978	
	SPEC. CODE	
DESIGN PHASE: AFC	FOR REVIEW/APPROVAL SIGNATURES SEE DAR NO. 100611	SIZE D · CAGE CODE 01MF3 · INDEX CODE NUMBER AREA 200 TYPE 0400 QL 090 ORG · DWG-623763 · REV
SAFETY CATEGORY: CG	EFFECTIVE DATE: 4/11/03	SCALE: NOTED · SHEET E-5

File: 623763.dwg Date: 04/11/03 - 07:29 A.M. Layout Name: D Size ID: RDH5

REVISIONS		
REV	DESCRIPTION	EFFECTIVE DATE:

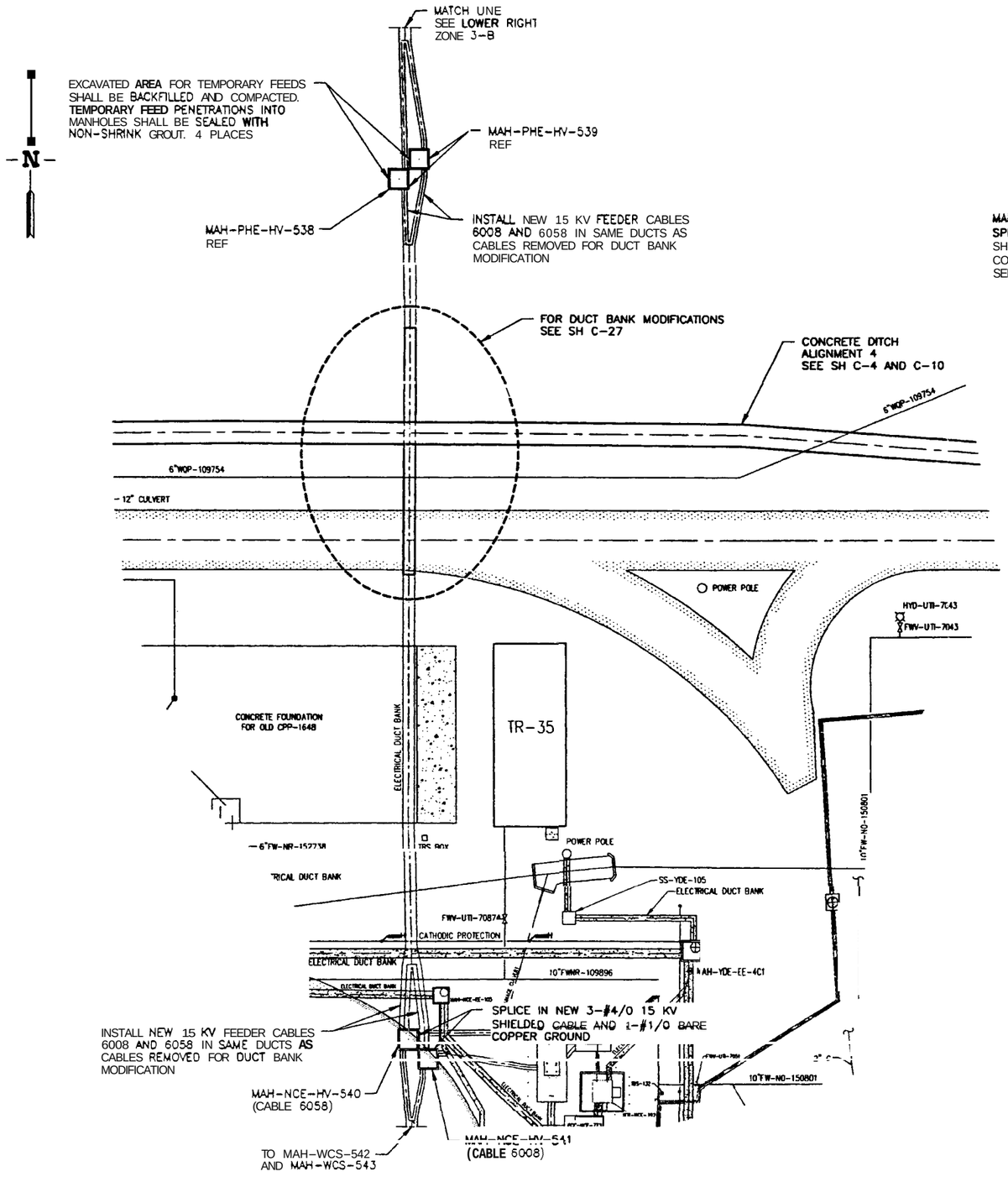

PERMANENT FEED INSTALLATION PLAN

SCALE 1"=20.0'

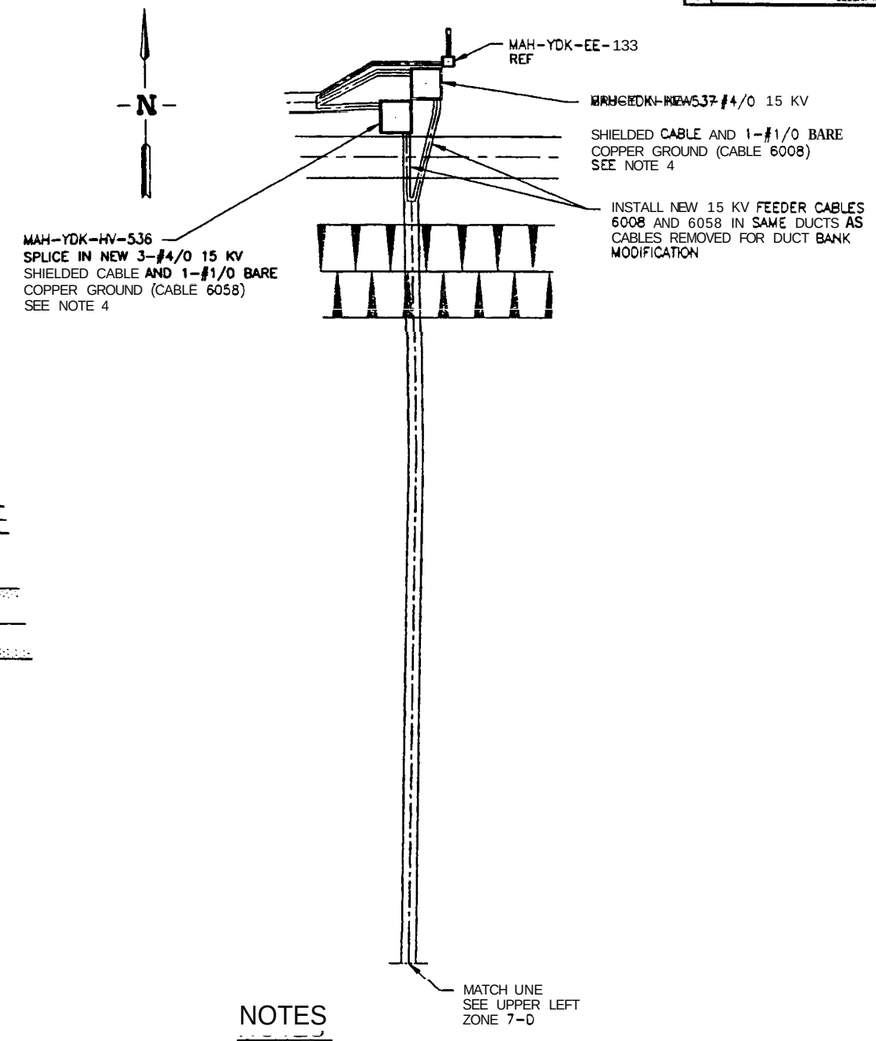

NOTES

1. ELECTRICAL SERVICE TO THE DEEPWELL PUMPS P-UTI-670 AND P-UTI-671 SHALL NOT BE WORKED SIMULTANEOUSLY. ONE PUMP **SHALL** BE KEPT IN OPERATION AT ALL TIMES. PUMPS ARE **OPERATED** IN A **"MONTH ON-MONTH OFF"** SCHEDULE. AT TIME OF CONSTRUCTION THE PUMP IN THE "OFF" SCHEDULE SHALL HAVE FEED INSTALLED FIRST. PRIOR TO CONSTRUCTION INTEC OPERATIONS SHAU BE CONTACTED.
2. DEEIPWEU PUMPS P-UTI-670 AND P-UTI-671 ARE FED FROM SUBSTATION 60 CIRCUIT BREAKERS CB08 AND CB58. SEE ATTACHED REFERENCE ONE-LINE DIAGRAM DRAWING, 185249.
3. **DUCTS WITH CABLES 6008 AND 6058 SHALL BE SEALED TO PREVENT MOISTURE FROM ENTERING.**
4. CUT **CABLES** 6008 AND 6058 AND REMOVE CABLE SECTIONS TO MAH-PHE-HV-538 AND MAH-PHE-HV-539. LEAVE A MINIMUM OF 15'-0" TO ALLOW FOR SPLICING AND PROPER ROUTING IN MANHOLES MAH-YDK-HV-536 AND MAH-YDK-HV-537.

PROFESSIONAL ENGINEER REGISTERED 8614 4-11-03 STATE OF IDAHO JAMES D. ZOLYNIAK

FOR DRAWING INDEX SEE DRAWING NO. 623729	SUBCONTRACT NO. N/A	INEEL — Idaho National Engineering & Environmental Laboratory — BECHTEL BWXT IDAHO, LLC
20' 10' 5' 0 20' SCALE 1" = 20.0'	REQUESTER: LEE DAVISON	INEEL OU 3-13 GROUP 1 TANK FARM INTERIM ACTION PHASE I
	DESIGN: JIM ZOLYNIAK	
	DRAWN: ROB HERGESHEIMER	
	PROJECT NO. 020978	P-UTI-670 AND P-UTI-671 PERMANENT FEED INSTALLATION
	SPCL CODE	
DESIGN PHASE: AFC	FOR REVIEW/APPROVAL SIGNATURES SEE DAR NO. 100611	SIZE D · CAGE CODE 01MF3 · INDEX CODE NUMBER AREA 200 TYPE 0400 Q 10 ORIG 090 · DWG-623764 · REV
SAFETY CATEGORY: CG	EFFECTIVE DATE: 4/11/03	SCALE: NOTED · SHEET E-6

File: 623764.dwg
Path: G:\ydn5\new-phase1-tank\Form\CHECK-INCORP
Date: 04/11/03 - 11:12 AM | Layout Name: D Size | ID: MLW5

REVISIONS		
REV	DESCRIPTION	EFFECTIVE DATE:

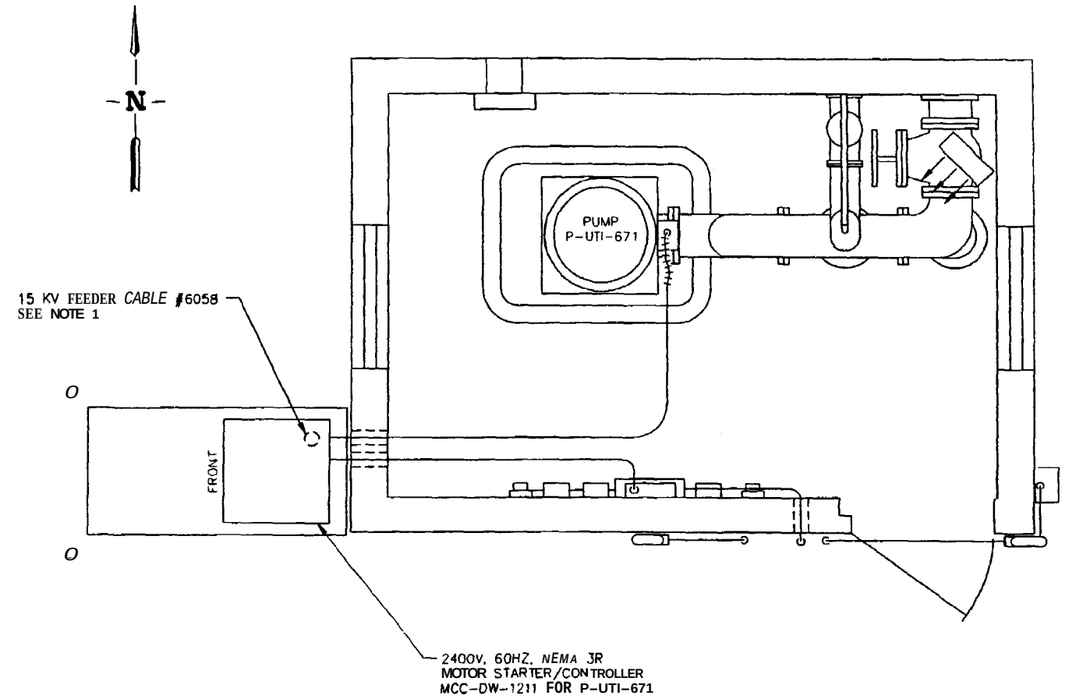

PUMP HOUSE PLAN – CPP–612

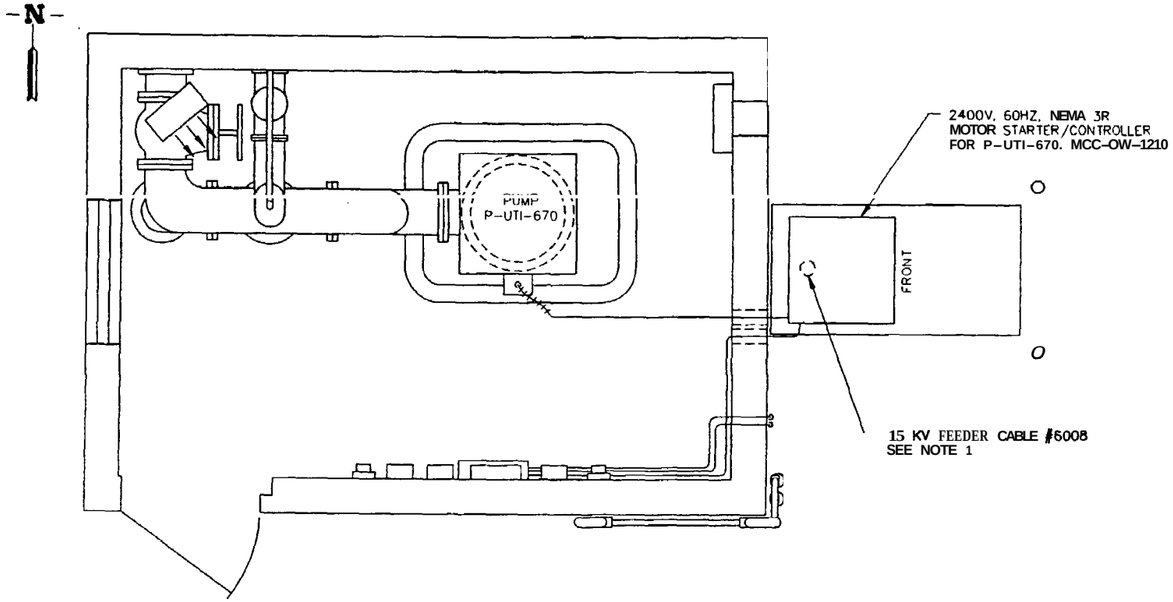

PUMP HOUSE PLAN – CPP–611

NOTES

1. DISCONNECT 15 KV FEEDERS #6008 AND #6058 TO ALLOW RE-TESTING OF CABLES. RETAIN 15 KV STRESS CONES FOR RECONNECTION. RECONNECT CABLES AFTER TESTING. SERVICE TO BOTH PUMPS SHALL NOT BE WORKED SIMULTANEOUSLY. SEE NOTE 1 ON SHEET E-6

PROFESSIONAL ENGINEER REGISTERED 9614 4-11-03 STATE OF IDAHO JAMES D. ZOLYNSKI

FOR DRAWING INDEX SEE DRAWING NO. 623729	SUBCONTRACT NO. N/A	INEEL — BECHTEL BWXT IDAHO, LLC
NO SCALE	REQUESTOR: LEE DAVISON DESIGN: JIM ZOLYNSKI DRAWN: ROB HERGESHEIMER PROJECT NO. 020978 SPCL CODE	INEEL OU 3-13 GROUP 1 TANK FARM INTERIM ACTION PHASE 1 PUMP HOUSE PLANS
DESIGN PHASE: AFC	FOR REVIEW/APPROVAL SIGNATURES SEE DAR NO. 100611	SIZE D · CAGE CODE 01MF3 · INDEX CODE NUMBER AREA 200 TYPE 0400 Q 10 ORG 090 · DWG-623765 · REV
SAFETY CATEGORY: CG	EFFECTIVE DATE: 4/11/03	SCALE: NONE · SHEET E-7

File: 623765.dwg
Path: G:\Gds5\Tea-
Date: 04/11/03 - 11:12 AM | Layout Name D Size
Uniform CHECK-INCORP
ID: ML 5

Appendix F–3

Revised Phase II Design Drawings
(SPC-472)

(624400–624404)

REVISIONS		
REV	DESCRIPTION	EFFECTIVE DATE:

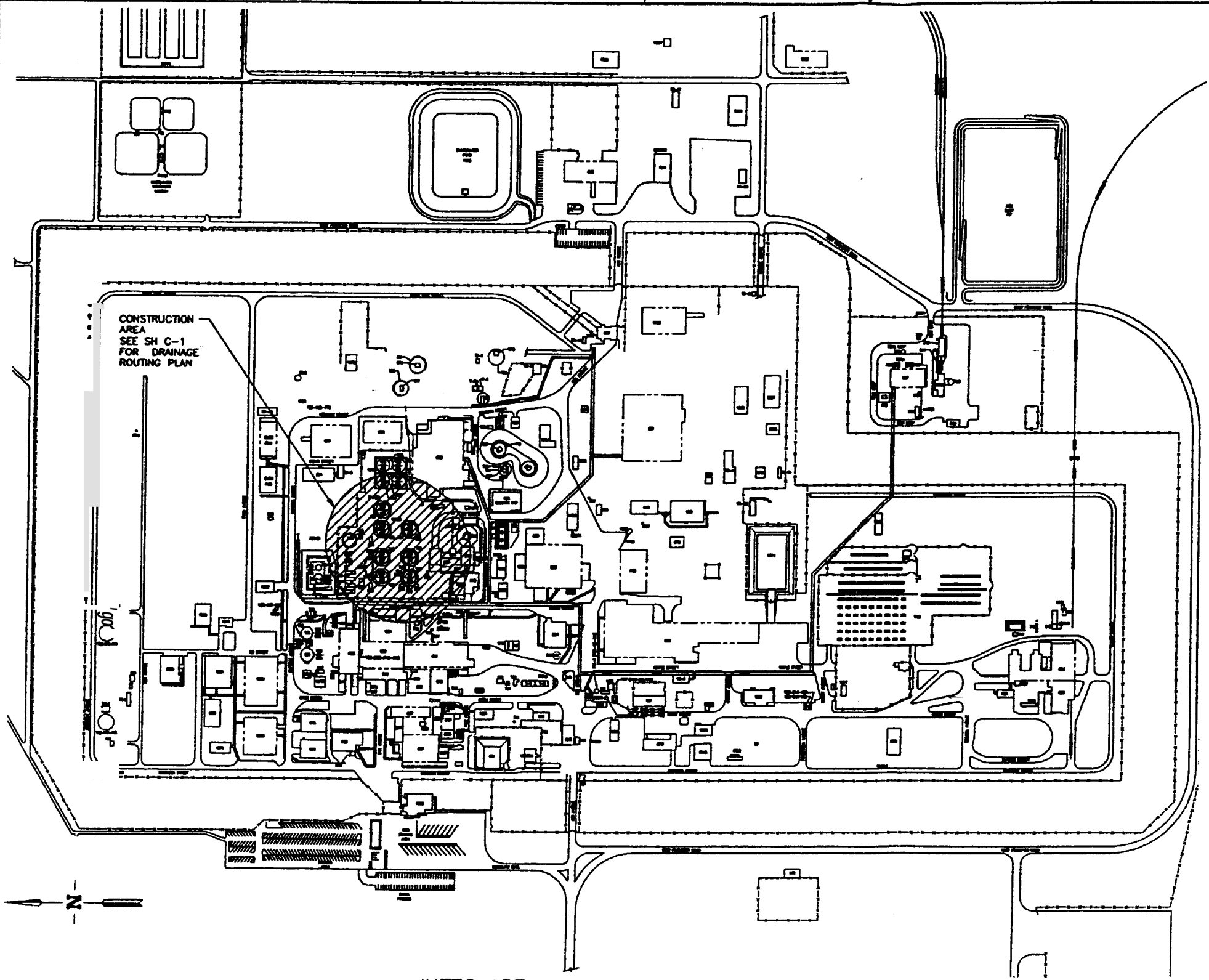

INTEC AREA MAP

SCALE: 1"=200.0'
BASED ON SITE SPECIFIC DATUM

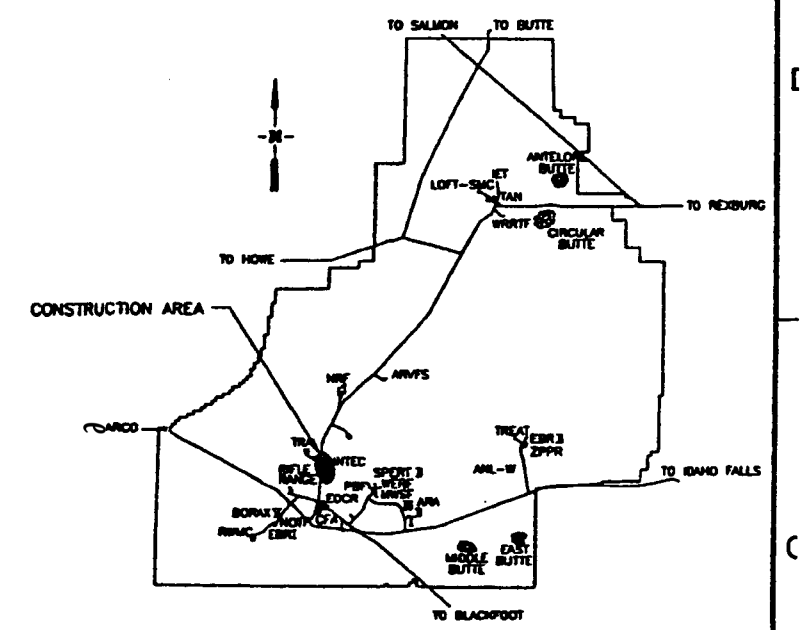

INEEL SITE MAP

SCALE: NONE

DRAWING INDEX

PAGE NO.	DWG NO.	A-E DWG NO.	REV	DRAWING TITLE
1	624400	T-1		SITE MAP, AREA MAP AND DRAWING INDEX
2	624401	C-1		DRAINAGE ROUTING PLAN
3	624402	C-2		PAVING PLAN
4	624403	C-3		PAVING PLAN
5	624404	C-4		DETAIL AND SECTIONS

FOR DRAWING INDEX SEE DRAWING NO. 624400	SUBCONTRACT NO. N/A	INEEL
SCALE: 1" = 200.0'	REQUESTER: KIM ROGERS	INEEL OU 3-13 GROUP 1 TANK FARM INTERIM ACTION PHASE II SITE MAP, AREA MAP AND DRAWING INDEX
	DESIGN: KURT FRITZ	
	DRAWN: ROB HERGESHEIMER	
	PROJECT NO.: 23614	
	SPEC CODE	
DESIGN PHASE: AFC	FOR REVIEW/APPROVAL SIGNATURES SEE DWR NO. 102631	SIZE D · CAGE CODE 01MF3 · AREA 200 · TYPE 0100 · A 01 · DISC 090 · DWG-624400 · REV
SAFETY CATEGORY: CG	EFFECTIVE DATE: 6/24/03	SCALE: NOTED · SHEET T-1

File: 624400.dwg
Path: A:\landform-phase-2\revised\acad
Date: 06/24/03 - 4:41 P.M. | Layout Name: Layout1

REVISIONS		
REV	DESCRIPTION	EFFECTIVE DATE:

EXTEND HDPE DRAIN PIPE 5 LF ON EXIST. CONC DITCH, CUT HOLE THROUGH FENCE AS REQUIRED

CUT HOLE THROUGH FENCE AS REQUIRED

HDPE DRAIN PIPE FIELD ROUTED APPROX AS SHOWN, TYP 5 PLACES

EXTEND HDPE DRAIN PIPE 5 LF ON EXIST CONC DITCH

WYE CONNECTION

TANK FARM CLOSURE OPERATION TENTS, RETAIN AND PROTECT. TYP

DISCHARGE TO EXIST CONC DITCH

CUT HOLE THROUGH FENCE

SEE SH C-2 FOR PAVING PLAN

BALLAST TUBE SEE TYP DETAIL 2/C-4 (GFE)

CECLA SITE CPP-31

WYE CONNECTION

CECLA SITE CPP-28

CECLA SITE CPP-79

HAND EXCAVATE UNDER DUCT BANK CROSSING TO ALLOW HDPE DRAIN PIPE TO PASS. CONSTRUCT "V" DITCH WITH 3H:1V SIDE SLOPES, MAINTAIN A 0.5% SLOPE AS SHOWN TO DAYLIGHT. VERIFY GRADES PRIOR TO INSTALLING PAVEMENT

INSTALL DANDY PIPE SOCK AT DISCHARGE LOCATION SEE SPEC 02430 TYP 5 PLACES

EXTEND HDPE DRAIN PIPE 5 LF INSIDE EXIST CMP CULVERT

SEE SH C-3 FOR PAVING PLAN

DISCHARGE TO EXIST TRENCH DRAIN

CPP-684

LEGEND

- ASPHALT CURB VARYING IN HEIGHT
- ASPHALT CROWN
- ASPHALT SWALE
- ASPHALT PAVEMENT
- DEMOLITION
- CERCLA SITE
- EXISTING CONTOUR
- EXISTING STRUCTURE/ITEMS
- DIRECTION OF SLOPE/GRADE
- FLOW ARROW
- XX.X/XX.X - FINISHED ASPHALT GRADE/EXISTING GRADE
- XX.X - EXISTING GRADE
- CMP - CORRUGATED METAL PIPE
- CONC - CONCRETE
- EL - ELEVATION
- EXIST. - EXISTING
- GFE - GOVERMENT FURNISHED EQUIPMENT
- HDPE - HIGH DENSITY POLYETHYLENE
- INV - INVERT ELEVATION
- LF - LINEAR FOOT
- SH - SHEET
- SPEC - SPECIFICATION
- TOC - TOP OF CONCRETE
- TOS - TOP OF STEEL

DRAINAGE ROUTING PLAN

SCALE: 1"=20.0'

FOR DRAWING INDEX SEE DRAWING NO. 624400	SUBCONTRACT NO. N/A	INEEL (BECHTEL BWXT IDAHO, LLC)
SCALE: 1" = 20'0"	REQUESTER: TOM ROGERS	INEEL OU 3-13 GROUP 1 TANK FARM INTERIM ACTION PHASE II DRAINAGE ROUTING PLAN
	DESIGN: KURT FRITZ	
	DRAWN: ROB HERGESHEIMER	
	PROJECT NO. 23614	
	SPCL CODE	
DESIGN PHASE: AFC	FOR REVIEW/APPROVAL SIGNATURES	SIZE D / CADD CODE 01MF3 / INDEX CODE NUMBER AREA 200 TYPE 0100 SYS 02 SEQ 090 / DWG-624401 / REV
SAFETY CATEGORY: CG	SEE DWG NO. 102631	SCALE: NOTED / SHEET C-1
	EFFECTIVE DATE: 6/24/03	

File: 624401.dwg
Path: X:\tankfarm-phase-2\rovers\ccorp
Date: 06/24/03 - 4:40 P.M. | Layout Name: D Size (2)
Dr. RDHS

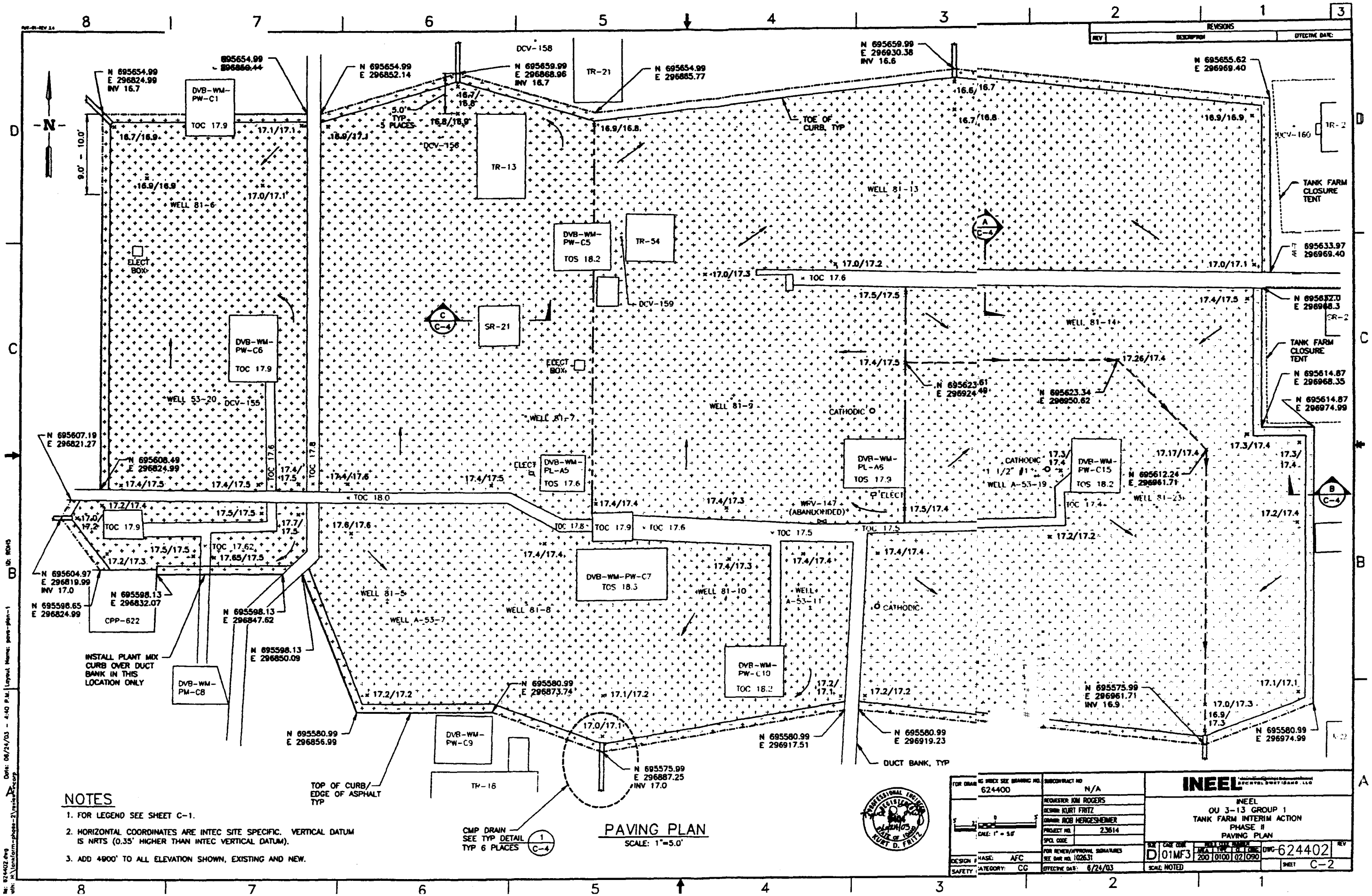

NOTES

1. FOR LEGEND SEE SHEET C-1.
2. HORIZONTAL COORDINATES ARE INTEC SITE SPECIFIC. VERTICAL DATUM IS NRTS (0.35' HIGHER THAN INTEC VERTICAL DATUM).
3. ADD 4900' TO ALL ELEVATION SHOWN, EXISTING AND NEW.

REVISIONS		
REV	DESCRIPTION	EFFECTIVE DATE:

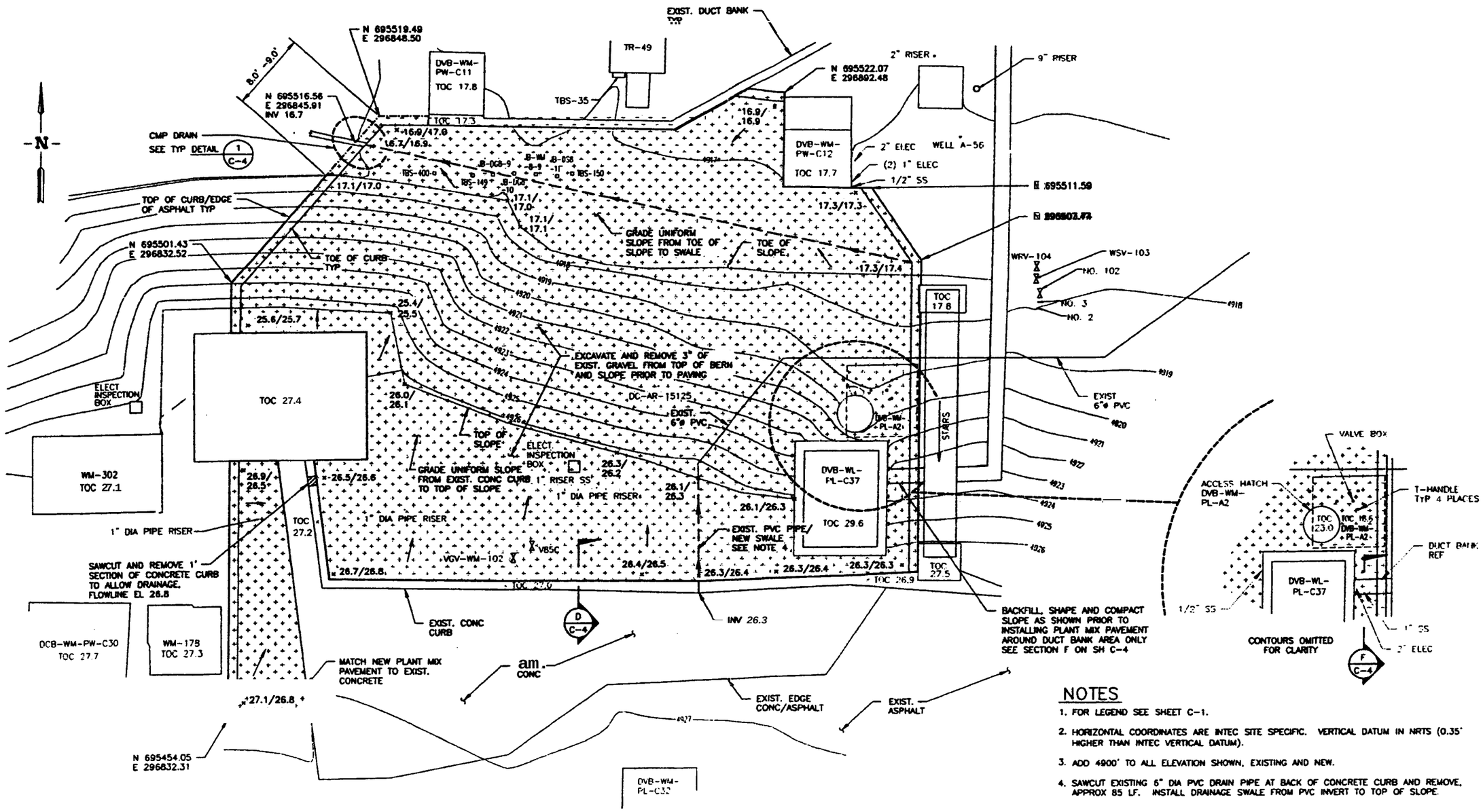

PAVING PLAN

SCALE: 1"=5.0'

NOTES

1. FOR LEGEND SEE SHEET C-1.
2. HORIZONTAL COORDINATES ARE INTEC SITE SPECIFIC. VERTICAL DATUM IN NRTS (0.35' HIGHER THAN INTEC VERTICAL DATUM).
3. ADD 4900' TO ALL ELEVATION SHOWN, EXISTING AND NEW.
4. SAWCUT EXISTING 6" DIA PVC DRAIN PIPE AT BACK OF CONCRETE CURB AND REMOVE, APPROX 85 LF. INSTALL DRAINAGE SWALE FROM PVC INVERT TO TOP OF SLOPE.

FOR DRAWING INDEX SEE DRAWING NO. 624400	SUBCONTRACT NO. N/A	INEEL
SCALE: 1" = 5.0'	REQUESTER: KIM ROGERS	INEEL OU 3-13 GROUP 1 TANK FARM INTERIM ACTION PHASE II PAVING PLAN
	DESIGN: KURT FRITZ	
	DRAWN: ROB HERGESHEIMER	
	PROJECT NO. 23614	
	SPCL CODE	
DESIGN PHASE: AFC	FOR REVIEW/APPROVAL SIGNATURES SEE DAR NO. 102631	SIZE D · CADD CODE 01MF3 · AREA 200 · SYS 0100 · DA 02 · DWG 090 · DWG-624403 · REV
SAFETY CATEGORY: CG	EFFECTIVE DATE: 6/24/03	SCALE: NOTED · SHEET C-3

PROFESSIONAL ENGINEER REGISTERED STATE OF IDAHO KURT D. FRITZ 6/24/03

Dwg: 624403.dwg
Path: H:\landform-phase-2\paving
Date: 06/24/03 - 4:46 P.M. | Layout Name: pave-plan-2
By: ROHS

REVISIONS		
REV	DESCRIPTION	EFFECTIVE DATE:

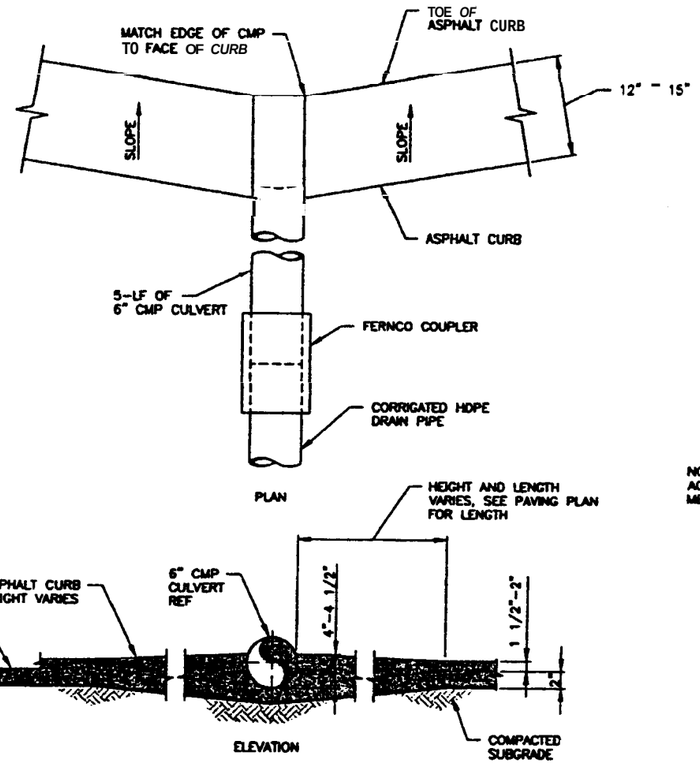

TYPICAL CURB/CULVERT DETAIL (1 C-3) (C-2)
SCALE: 1 1/2"=1'-0"

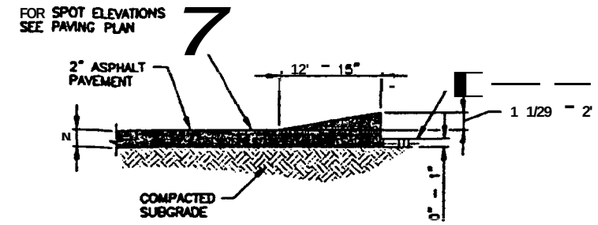

TYPICAL EDGE CURB SECTION (B C-2)
SCALE: 1 1/2"=1'-0"

NOTE
SUBCONTRACTOR MAY SUBMIT ALTERNATE CURB DETAILS FOR CONTRACTOR APPROVAL.

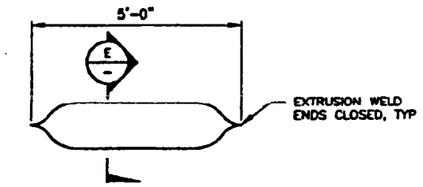

TYPICAL BALLAST TUBE (GFE) DETAIL (2 C-1)
SCALE: NTS

NOTE
SEE SPEC 02430 FOR ADDITIONAL BALLAST TUBE REQUIREMENTS.

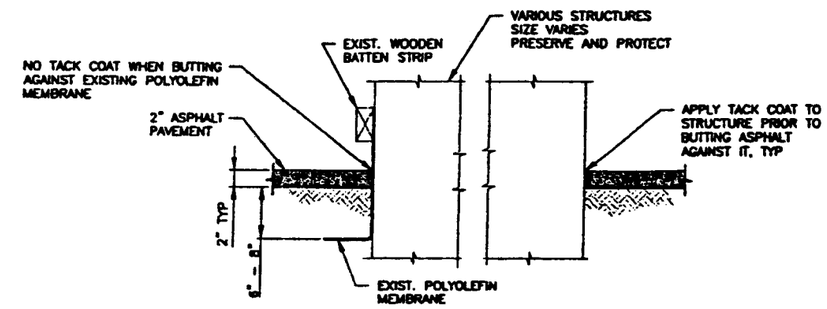

TYFWAL ASPHALT TO STRUCTURE SECTION (C-2)
SCALE: 1 1/2"=1'-0"

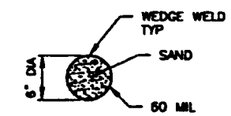

SECTION (E -)
SCALE: NTS

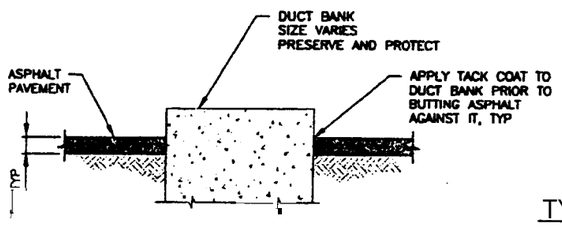

TYPICAL ASPHALT TO DUCT BANK SECTION (A C-2)
SCALE: 1 1/2"=1'-0"

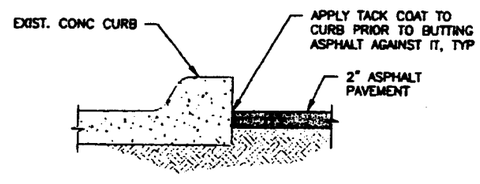

TYPICAL ASPHALT TO CURB SECTION (D C-3)
SCALE: 1 1/2"=1'-0"

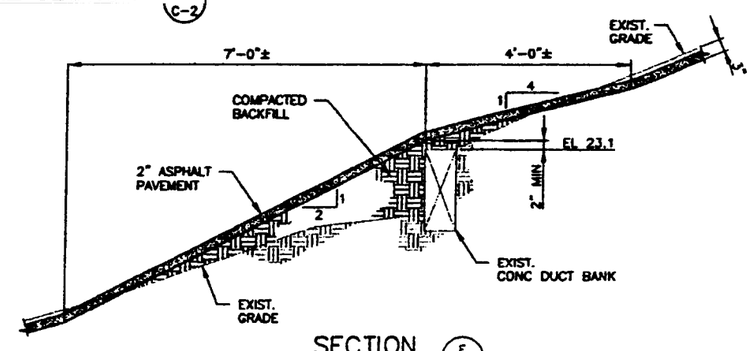

SECTION (F C-3)
3/4"=1'-0"

FOR DRAWING INDEX SEE DRAWING NO. 624400	SUBCONTRACT NO. N/A	INEEL
SCALE: 1 1/2" = 1'-0"	ENGINEER: KIM ROGERS	INEEL OU 3-13 GROUP 1 TANK FARM INTERIM ACTION PHASE II DETAIL AND SECTIONS
SCALE: 3/4" = 1'-0"	DESIGN: KURT FRITZ	
	DRAWN: ROB HERGESHOMER	
	PROJECT NO. 23614	
	SPCL CODE	
DESIGN PHASE: AFC	FOR REVIEW/APPROVAL SIGNATURES SEE DWR NO. 102631	SIZE D / CADD CODE 01MF3 / DWG NUMBER AREA 200 TYPE 0100 CAT 02 DWG 090 / DWG-624404 / REV
SAFETY CATEGORY: CG	EFFECTIVE DATE: 6/24/03	SCALE NOTED / SHEET C-4

PROFESSIONAL ENGINEER REGISTERED STATE OF IDAHO KURT D. FRITZ

File: 624404.dwg
Path: K:\tankfarm-phase-2\revisions\
Date: 06/24/03 - 4:40 P.M. | Layout Name: details
ID: RDHS