THE CONTENTS OF THIS SECTION ARE
THE HIGHEST QUALITY AVAILABLE

INITIAL KH DATE 10/24/03

Appendix F–1

Original Design Drawings
(SPC-269)

(515157–515219)

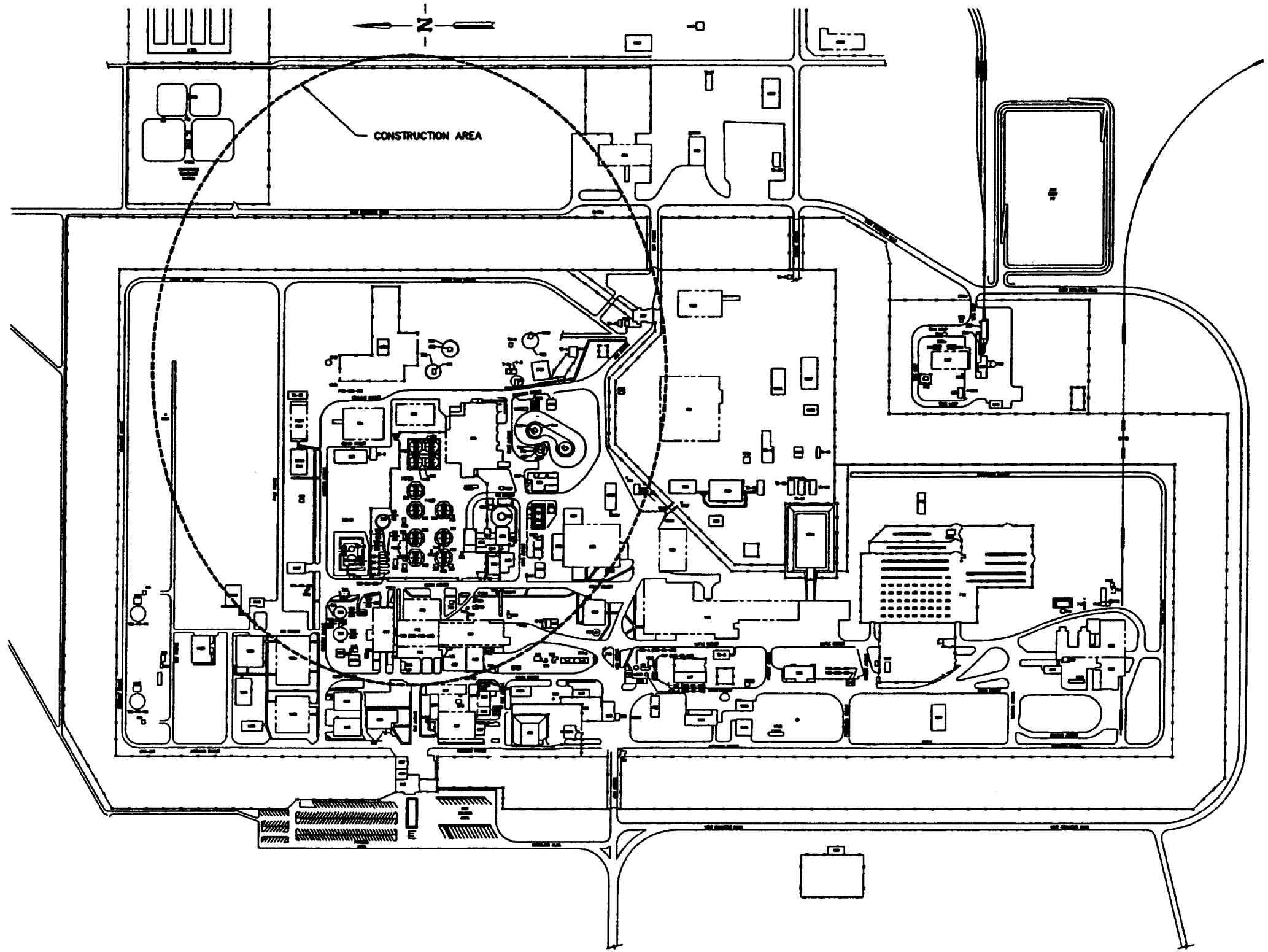

INTEC AREA MAP

SCALE: 1"=200.0'

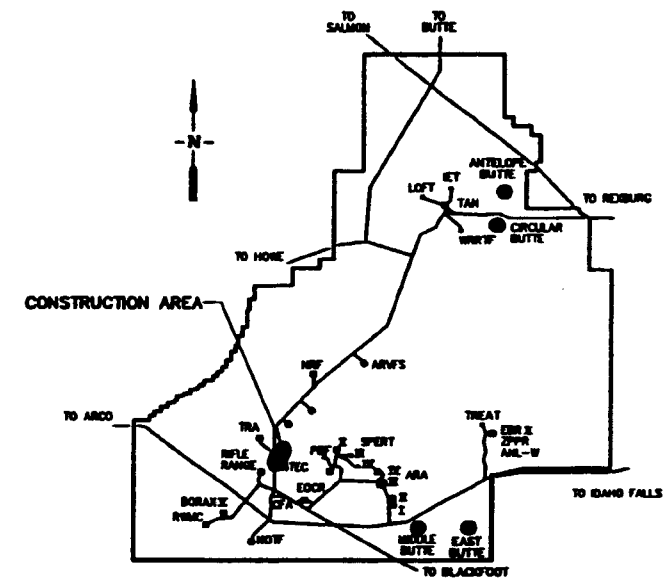

SITE MAP

SCALE: NONE

FOR DRAWING	SIZE DRAWING NO. 58	SUBCONTRACT NO. S00-588051	INEEL
		ENGINEER: M.S. KAPTEIN	INEEL OU 3-13 GROUP 1 TANK FARM INTERIM ACTION PHASE 1& 2 SITE MAP AND AREA MAP
		DESIGN: KURT FRITZ	
		DRAWN: ROB HERGESHEIMER	
		PROJECT NO. 020878	
		SPEC CODE	
DESIGN S AFC		FOR REVIEW/APPROVAL SIGNATURES SEE DWG NO. 86386	SIZE D / CAGE CODE / DWG CODE / AREA 200 / SYS 0100 / TA 38 / CODE 090 / DWG-515157 / REV
QUALITY LEVEL: 3		EFFECTIVE DATE: 9/18/2000	SCALE: NOTED / SHEET T-1

File: T-1.dwg
Path: G:\003-13-TANKFARM\0-8-00 Layout Name: Layout1
ID: RDHS

DRAWING INDEX

PAGE NO.	DWG NO.	A-E DWG NO.	REV	DRAWING TITLE
1	515157	T-1	-	SITE MAP AND AREA MAP
2	515158	T-2	-	DRAWING INDEX
3	515159	T-3	-	LEGEND, ABBREVIATIONS AND GENERAL NOTES
4	515160	C-1	-	ALIGNMENT PLAN (1 OF 2)
5	515161	C-2	-	ALIGNMENT PLAN (2 OF 2)
6	515162	C-3	-	ALIGNMENTS 1, 3, 5 & 7 PLANS
7	515163	C-4	-	ALIGNMENT 2 PLAN (1 OF 2)
8	515164	C-5	-	ALIGNMENT 2 PLAN (2 OF 2)
9	515165	C-6	-	ALIGNMENT 4 PLAN (1 OF 2)
10	515166	C-7	-	ALIGNMENT 4 PLAN (2 OF 2)
11	515167	C-8	-	ALIGNMENT 6 PLAN
12	515168	C-9	-	ALIGNMENT 8 PLAN (1 OF 2)
13	515169	C-10	-	ALIGNMENT 8 PLAN (2 OF 2)
14	515170	C-11	-	ALIGNMENT 1 PROFILE
15	515171	C-12	-	ALIGNMENT 2 PROFILE
16	515172	C-13	-	ALIGNMENT 3 PROFILE
17	515173	C-14	-	ALIGNMENT 4 PROFILE
18	515174	C-15	-	ALIGNMENT 5 PROFILE
19	515175	C-16	-	ALIGNMENT 0 PROFILE
20	515176	C-17	-	ALIGNMENT 7 PROFILE
21	515177	C-18	-	ALIGNMENT 8 PROFILE
22	515178	C-19	-	EVAPORATION POND 1793
23	515179	C-20	-	EVAPORATION POND SECTIONS
24	515180	C-21	-	EVAPORATION POND SECTIONS AND DETAILS
25	515181	C-22	-	EVAPORATION POND DETAILS
26	515182	C-23	-	EVAPORATION POND SECTIONS AND DETAILS
27	515183	C-24	-	EVAPORATION POND SECTION, VIEWS AND DETAILS
28	515184	C-25	-	TANK FARM GRADING PLAN
29	515185	C-26	-	GRADING PROFILES 1, 2 AND 3
30	515186	C-27	-	GRADE PROFILES 4, 5, 6 AND 7
31	515187	C-28	-	POLYUREA COATING AND ASPHALT CONCRETE PLAN
32	515188	C-29	-	ENLARGED AREA 1
33	515189	C-30	-	ENLARGED AREA 2
34	515190	C-31	-	ENLARGED AREA 3
35	515191	C-32	-	ENLARGED AREA 4

DRAWING INDEX

PAGE NO.	DWG NO.	A-E DWG NO.	REV	DRAWING TITLE
36	515192	C-33	-	DITCH DETAILS AND SECTIONS
37	515193	C-34	-	HEADWALL AND ENDWALL DETAILS & SECTIONS
38	515194	C-35	-	MANHOLE DETAIL AND SECTIONS
39	515195	C-36	-	ENDWALL DETAILS AND SECTIONS
40	515196	C-37	-	ENDWALL DETAIL AND SECTIONS
41	515197	C-38	-	HEADWALL DETAIL AND SECTIONS
42	515198	C-39	-	HEADWALL DETAIL AND SECTIONS
43	515199	C-40	-	ENDWALL DETAIL AND SECTIONS
44	515200	C-41	-	CATCH BASIN DETAIL AND SECTIONS
45	515201	C-42	-	ENLARGED PLAN AND DETAILS
46	515202	C-43	-	DRAIN INLET SECTIONS AND DETAIL
47	515203	C-44	-	MANHOLE AND MISC. DETAILS AND SECTIONS
48	515204	C-45	-	MISC. DETAILS
49	515205	C-46	-	LIFT STATION SECTIONS AND DETAIL
50	515206	C-47	-	FENCING DETAILS
51	515207	E-1	-	MCC-OGF-1049 ONE LINE DIAGRAM
52	515208	E-2	-	CPP-1773 FLOOR PLAN
53	515209	E-3	-	CPP-604 FLOOR PLAN
54	515210	E-4	-	CPP-649 FLOOR PLAN AND SECTIONS
55	515211	E-5	-	PB-WL-EE-167 & 169 LAYOUT AND SECTIONS
56	515212	E-6	-	SECTIONS
57	515213	E-7	-	PUMP CONTROLLER PAD DETAILS
58	515214	E-8	-	LIFT STATION 1792 PLAN, SECTION & DETAILS
59	515215	E-9	-	SCHEDULES AND LABEL DETAIL
60	515216	E-10	-	PCC-CW2-1085 ONE LINE DIAGRAM
61	515217	E-11	-	PARTIAL CONDUIT LAYOUT PLAN & SECTION
62	515218	E-12	-	VIEW AND DETAILS
63	515219	E-13	-	RACK ELEVATION & LAYOUT

REVISIONS

REV	DESCRIPTION	EFFECTIVE DATE:

FOR DRAWING INDEX SEE DRAWING NO. 515158

NO SCALE

DESIGN PHASE: AFC

QUALITY LEVEL: 3

SUBCONTRACT NO. S00-568051

REDRAWN: M.S. KAPTEIN

DESIGN: KURT FRITZ

DRAWN: M WINTERS

PROJECT NO. 020978

SPEC CODE

FOR REVIEW/APPROVAL SIGNATURES SEE DAR NO. 68368

EFFECTIVE DATE: 9/18/2000

INEEL

INEEL
OU 3-13 GROUP 1
TANK FARM INTERIM ACTION
PHASE 1 & 2
DRAWING INDEX

SIZE D | CAGE CODE | DWG CODE SEQUENCE: AREA 200 | DISC 9999 | CL 01 | DWC 080 | DWG- 515158 | REV

SCALE: NONE | SHEET T-2

File: T-3.dwg
Path: G:\OU3-13-TANKFARM\E-drawings\
ID: RDH4
Layout Name: D Size
Saved: 9/18/00 - 4:01 P.M.

REV	DESCRIPTION	EFFECTIVE DATE:
	REVISIONS	

SYMBOL KEY

- A — SECTION LETTER; A-1 — A/E SHEET REFERENCE
- A — VIEW OR ELEVATION LETTER; A-1 — A/E SHEET REFERENCE
- 1 — DETAIL NUMBER; — SAME SHEET REFERENCE
- 6"WON-106108 — EXISTING UNDERGROUND UTITILIES, SEE NOTE 18
- EXISTING ELECTRICAL OR TELEPHONE DUCT BANK
- EXISTING FIRE HYDRANT
- EXISTING PIV
- EXISTING GATE VALVE
- EXISTING POWER OR LIGHT POLE
- EXISTING ROADWAYS
- EXISTING BUILDINGS
- EXISTING SIDEWALKS
- MAH-XX-XX-XXX — EXISTING MANHOLE NUMBER
- NEW ITEMS TO BE INSTALLED
- +XX.XX — EXISTING ELEVATION
- XX.XX — NEW ELEVATION
- SLOPE OR GRADE TO DRAIN

MATERIALS

- ASPHALT PAVEMENT
- COMPACTED FILL
- CONCRETE
- GRANULAR FILL
- POLYUREA COATING
- SAND
- UNDISTURBED EARTH

GENERAL NOTES

1. DRAWINGS IN THIS PACKAGE ARE BASED ON CURRENT "AS BUILT" UNDERGROUND UTILITIES AS SHOWN ON DRAWING 055315 AS OF 12/97. THE DRAWINGS IN THIS PACKAGE REFLECT CURRENT ABOVE GROUND CONDITIONS THAT WERE FIELD VERIFIED.
2. RETAIN AND PROTECT ALL EXISTING FACILITIES UNLESS OTHERWISE NOTED.
3. MANHOLES SHALL BE INSTALLED AT THE ELEVATION SHOWN ON THE DRAWINGS. FOR AREAS TO BE PAVED, SLOPE FINISHED SURFACE FROM TOP OF MANHOLE RING 12 FEET AWAY FROM MANHOLE TO MATCH EXISTING GRADE WITH NEW ASPHALT CONCRETE. INSTALLATION OF MANHOLES SHALL BE FROM COORDINATES LISTED ON DRAWINGS. STATIONING OF MANHOLES IS DRAWING SPECIFIC AND FOR REFERENCE ONLY.
4. PIPING SHALL BE SLOPED TOWARD MANHOLES FOR PROPER DRAINAGE AS SHOWN ON THE PLANS AND SHALL BE CONSTRUCTED ON A STRAIGHT SLOPE AS SHOWN ON THE PLANS.
5. CUT AND SPLICE ALL CATHODIC AND ELECTRICAL CABLES IN ACCORDANCE WITH THE SPECIFICATIONS.
6. ALL UTILITIES EXPOSED DURING EXCAVATION ARE TO BE ADEQUATELY SUPPORTED BY SUBCONTRACTOR TO PREVENT DAMAGE DURING ALL PHASES OF CONSTRUCTION, INCLUDING BACKFILL.
7. SHORING MAY BE USED AT THE SUBCONTRACTORS' OPTION. SHORING, IF USED, IS TO BE DESIGNED AND ENGINEERED BY THE SUBCONTRACTOR. SEE EARTHWORK SPECIFICATION.
8. LOCATION AND ELEVATION SHOWN FOR EXISTING UTILITIES ARE APPROXIMATE. SUBCONTRACTOR SHALL HAND EXCAVATE TO FIELD LOCATE INTERFERENCES AND PREVENT ANY DAMAGE DURING EXCAVATION. SEE SPECIAL CONDITIONS AND EARTHWORK SPECIFICATION.
9. LOCATOR RIBBON DISTURBED DURING EXCAVATION OVER EXISTING UTILITIES IS TO BE REPLACED DURING BACKFILL AND COMPACTION. ALL NEW UTILITIES ARE TO BE MARKED WITH LOCATOR RIBBON PER SPECIFICATION.
10. FOR ESTIMATING PURPOSES, REMOVAL AND SAW CUTTING OF ALL ASPHALT CONCRETE SURFACES ARE ASSUMED TO BE AN AVERAGE OF 4" THICK.
11. PRIOR TO BACKFILLING, ALL EXPOSED UNDERGROUND UTILITIES ARE TO BE LOCATED BY HORIZONTAL COORDINATES AND VERTICAL ELEVATION BASED ON INTEC HORIZONTAL DATUM AND NRTS VERTICAL DATUM AND RECORDED ON THE RED LINE DRAWINGS.
12. SUBCONTRACTOR SHALL REINSTALL ALL SIGNS REMOVED DURING CONSTRUCTION AT OR NEAR THE ORIGINAL POSITION AFTER CONSTRUCTION IS COMPLETE.
13. TEMPORARY TRAFFIC CONTROL SIGNS, BARRICADES, FLAGGING ETC. MAY BE REQUIRED TO PROPERLY CONTROL TRAFFIC DURING CONSTRUCTION. ALL SIGNING AND TRAFFIC CONTROL OPERATIONS SHALL COMPLY WITH THE CURRENT "MANUAL ON UNIFORM TRAFFIC CONTROL DEVICES".
14. WHERE SPLICING OF EXISTING CABLES IS REQUIRED, CABLES SHALL BE PLACED BELOW NEW DITCHES AND CULVERTS, UNLESS THERE IS ROOM ON TOP TO MAINTAIN ADEQUATE COVER OVER CULVERTS.
15. IN THE EVENT THERE ARE CONFLICTS BETWEEN THE NEW CONCRETE DITCHES AND THE EXISTING FACILITIES, THE SUBCONTRACTOR MAY MAKE MINOR ADJUSTMENTS IN ALIGNMENT AND ELEVATION OF NEW DITCHES. ADJUSTMENTS SHALL BE PER CONTRACTORS APPROVAL.
16. SUBCONTRACTOR IS TO KEEP EXCAVATION ACTIVITIES IN THE SHOWN ENVIRONMENTAL CONTROLLED AREAS (ECA'S) TO A MINIMUM. ALL EXCAVATED MATERIAL SHALL BE MANAGED PER THE SPECIAL CONDITIONS. SEE SHEETS C-1 AND C-2.
17. HORIZONTAL COORDINATES ARE INTEC SITE SPECIFIC. VERTICAL DATUM IS NRTS. NRTS IS 0.35' HIGHER THAN INTEC VERTICAL DATUM.
18. EXISTING UTILITIES ARE SHOWN AND IDENTIFIED FOR INFORMATION ONLY. SPECIFIC LINE TYPE IDENTIFICATION WILL BE FURNISHED UPON REQUEST.

ABBREVIATIONS

AC	ASPHALT CONCRETE	HS	HIGH PRESSURE STEAM	SPEC	SPECIFICATON
BLDG	BUILDING	HYD	HYDRANT	STA	STATION
℄	CENTERLINE	HORIZ	HORIZONTAL	STD	STANDARD
CLR	CLEAR (COVER OVER REBAR)	ID	INTERNAL DIAMETER	SW	SERVICE WASTE
CMP	CORRUGATED METAL PIPE	INV	INVERT	THK	THICK
CMPA	CORRUGATED METAL PIPE (ARCH)	LC	LOAD CENTER	TOC	TOP OF CONCRETE
CS	CARBON STEEL	LF	LINEAR FOOT	TOS	TOP OF STEEL
CONC	CONCRETE	LG	LENGTH OR LONG	TYP	TYPICAL
CONT	CONTINUOUS	MAH	MANHOLE	UN	UNLESS NOTED OTHERWISE
CO	CLEAN OUT	MATL	MATERIAL	VERT	VERTICAL
COMM	COMMUNICATIONS DUCT BANK	MAX	MAXIMUM	WQ	SANITARY SEWER
CT	CONDENSATE	MFR	MANUFACTURER	X-REF	EXTERNAL REFERENCE DRAWING
CTR	CENTER	MIN	MINIMUM		
CY	CUBIC YARD	NG	NATIVE GRAVEL		
DB	DUCT BANK	NRTS	NAVAL REACTOR TESTING STATION		
DIA ø	DIAMETER	NO.	NUMBER		
DIP	DUCTILE IRON PIPE	OC	ON CENTER		
DP	DEPTH	OD	OUTSIDE DIAMETER		
DWG	DRAWING	PC	POINT OF CURVE		
EA	EACH	PIV	POST INDICATOR VALVE		
EF	EACH FACE	PLCS	PLACES		
EL	ELEVATION	PT	POINT OF TANGENT		
EQ SP	EQUALLY SPACED	PVC	POLYVINYLCHLORIDE		
EW	EACH WAY	R	RADIUS		
EXIST.	EXISTING	RC	REINFORCED CONCRETE		
FH	FIRE HYDRANT	REF	REFERENCE		
FIN. GRD	FINISHED GRADE	REQD	REQUIRED		
FL	FLOW LINE	REV	REVISION		
FO	FIBER OPTIC CABLE	RGS	RIGID GALVANIZED STEEL		
FT	FOOT/FEET	RP	REFERENCE POINT		
FW	FIRE WATER	SEC	SECTION		
HH	HANDHOLE	SH	SHEET		

REVISION: 0
ORIGINAL SIGNED BY: KURT D. FRITZ
DATE ORIGINAL SIGNED: 9/18/2000
SEAL NUMBER: 9404
ORIGINAL STORED AT: EROB DOCUMENT CONTROL

PROFESSIONAL ENGINEER REGISTERED 9404 STATE OF IDAHO KURT D. FRITZ

FOR DRAWING INDEX SEE DRAWING NO. 515158	SUBCONTRACT NO. S00-588051	INEEL	
NO SCALE	REPRESENTER: W.S. KAPTEIN DESIGN: KURT FRITZ DRAWN: M WINTERS PROJECT NO. 020978 SPEC CODE	INEEL OU 3-13 GROUP 1 TANK FARM INTERIM ACTION PHASE 1 & 2 LEGEND, ABBREVIATIONS AND GENERAL NOTES	
DESIGN PHASE: AFC QUALITY LEVEL: 3	FOR REVIEW/APPROVAL SIGNATURES SEE DAF NO. 68388 EFFECTIVE DATE: 9/18/2000	SIZE: D; CAGE CODE; INDEX CODE NUMBER: AREA 200, TYPE 9999, PL 38, SEQ 090	DWG-515159 REV SHEET T-3
		SCALE: NONE	

File: T-3.dwg
Path: s:\OU3-13-TANKFARM\8-6-00\
Drawn in Model Space

REVISIONS		
REV	DESCRIPTION	EFFECTIVE DATE

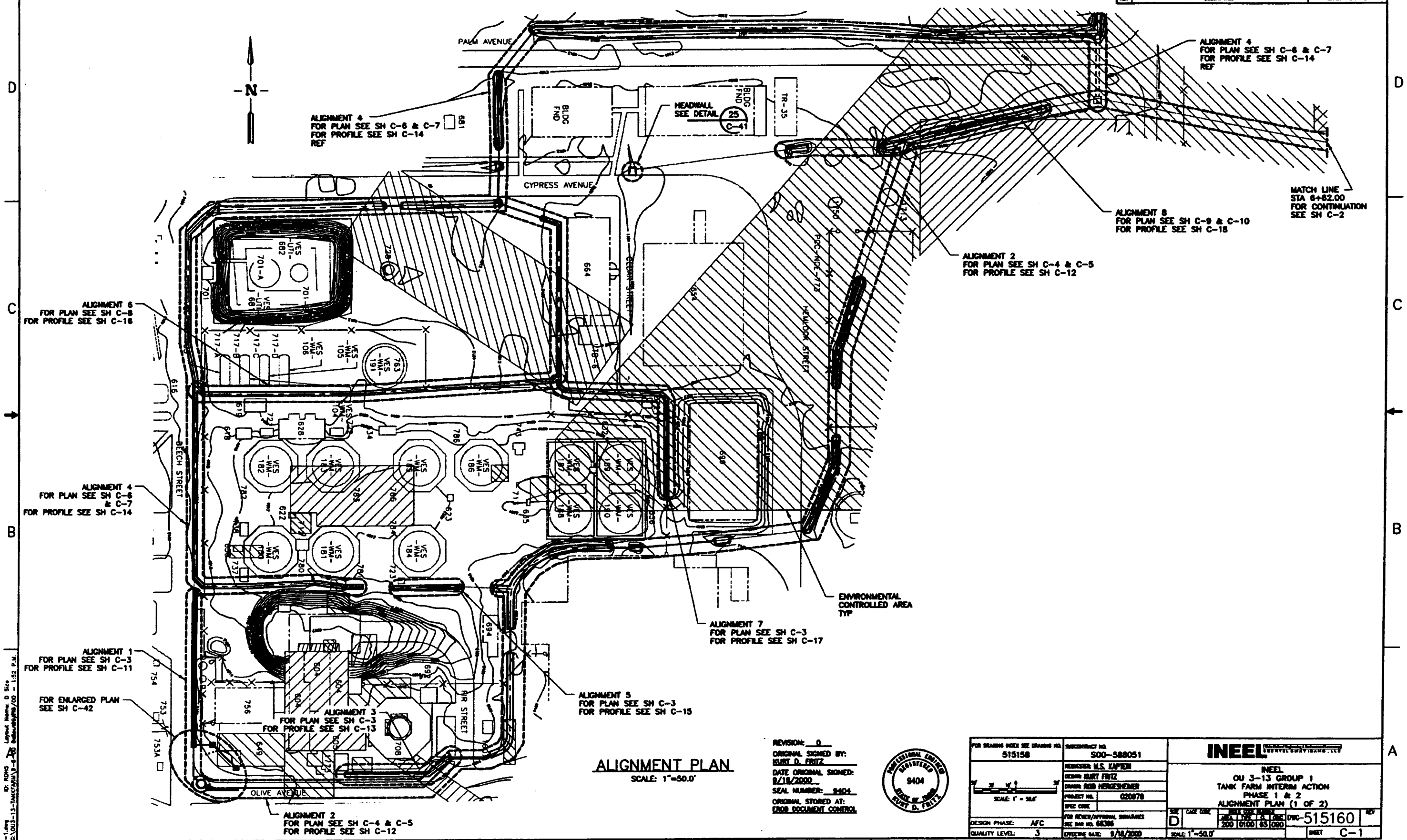

ALIGNMENT PLAN

SCALE: 1"=50.0'

REVISION: 0
ORIGINAL SIGNED BY: KURT D. FRITZ
DATE ORIGINAL SIGNED: 9/18/2000
SEAL NUMBER: 9404
ORIGINAL STORED AT: CRDB DOCUMENT CONTROL

PROFESSIONAL ENGINEER REGISTERED 9404 STATE OF IDAHO KURT D. FRITZ

FOR DRAWING INDEX SEE DRAWING NO.	515158
SCALE: 1" = 50.0'	
DESIGN PHASE:	AFC
QUALITY LEVEL:	3
SUBCONTRACT NO.	S00-588051
DESIGNER:	M.S. KAPTON
DESIGN:	KURT FRITZ
DRAWN:	ROB HERKESHEIMER
PROJECT NO.	020070
SPEC CODE	
FOR REVIEW/APPROVAL SIGNATURES SEE DAR NO.	04396
EFFECTIVE DATE:	9/18/2000

INEEL
INEEL
OU 3-13 GROUP 1
TANK FARM INTERIM ACTION
PHASE 1 & 2
ALIGNMENT PLAN (1 OF 2)

SIZE	CADD CODE	WORK CODE INDEX				DWG	REV
		AREA	TYPE	FACIL	DISC		
D		200	0100	65	090	DWG-515160	

SCALE: 1"=50.0' SHEET C-1

File: C-1.dwg
Path: G:\OU3-13-TANKFARM\9-8-00 Saturday,09/09/00 - 1:52 P.M. Layout Name: D Size
ID: ROHS

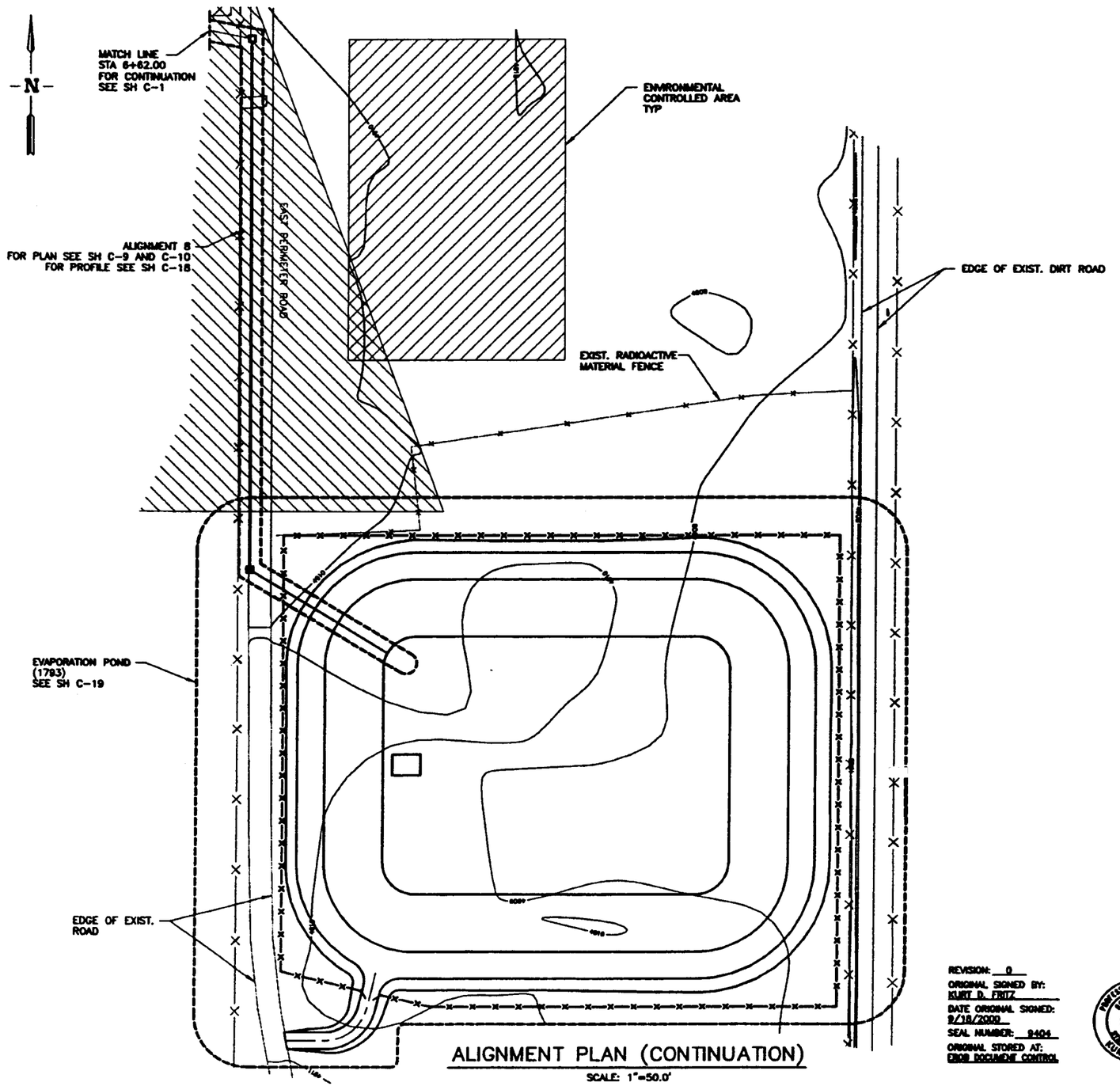

ALIGNMENT PLAN (CONTINUATION)

SCALE: 1"=50.0'

REVISION: 0
ORIGINAL SIGNED BY: KURT D. FRITZ
DATE ORIGINAL SIGNED: 9/18/2000
SEAL NUMBER: 9404
ORIGINAL STORED AT: EROB DOCUMENT CONTROL

PROFESSIONAL ENGINEER REGISTERED 9404 STATE OF IDAHO KURT D. FRITZ

REVISIONS		
REV	DESCRIPTION	EFFECTIVE DATE

FOR DRAWING INDEX SEE DRAWING NO. 515158

SCALE: 1" = 50.0'

DESIGN PHASE: AFC
QUALITY LEVEL: 3

SUBCONTRACT NO. S00-588051
REGISTER: N.S. KAPTEIN
DESIGN: KURT FRITZ
DRAWN: ROB HERGESHEIMER
PROJECT NO. 020978
SPEC CODE
FOR REVIEW/APPROVAL SIGNATURES SEE DWG NO. 68596
EFFECTIVE DATE: 9/18/2000

INEEL
INEEL
OU 3-13 GROUP 1
TANK FARM INTERIM ACTION
PHASE 1 & 2
ALIGNMENT PLAN (2 OF 2)

SIZE D | CAGE CODE | DWG CODE NUMBER AREA 200 SYS 0100 TYP 65 SEQ 080 | DWG-515161 | REV
SCALE: 1"=50.0' | SHEET C-2

File: C-2.DWG
Path: C:\OU3-13-TANKFARM\0-0-AB
ID: RDHS
Layout Name: 0 Size
Date: 09/18/00 - 1:55 P.M.

REVISIONS		
REV	DESCRIPTION	EFFECTIVE DATE

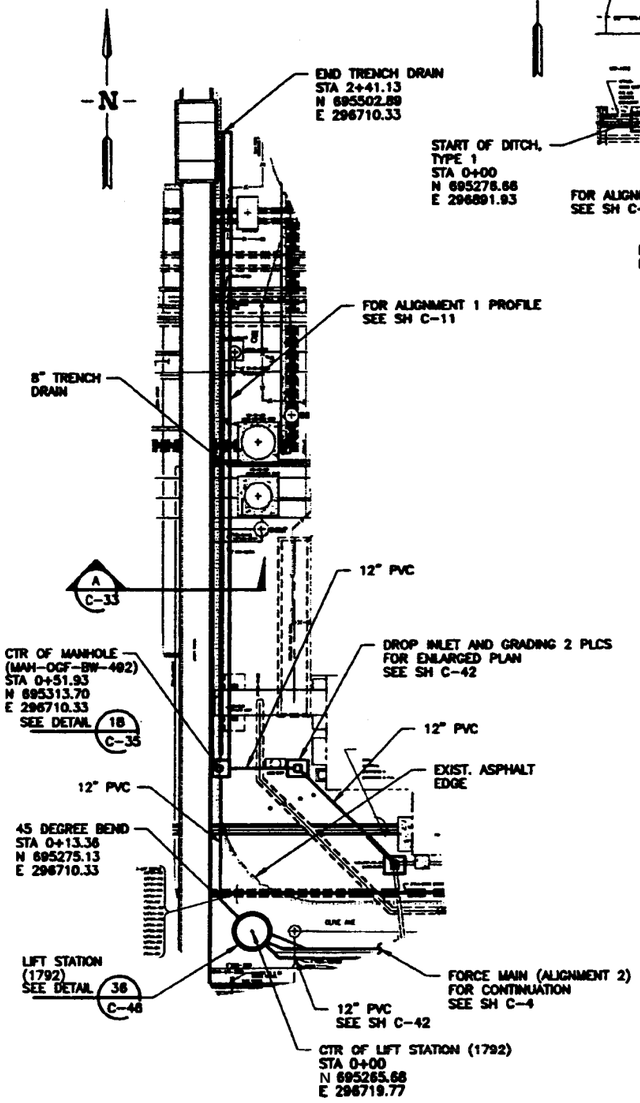

ALIGNMENT 1 PLAN

SCALE: 1"=20.0'

REF C-1 C-4 C-6 C-31

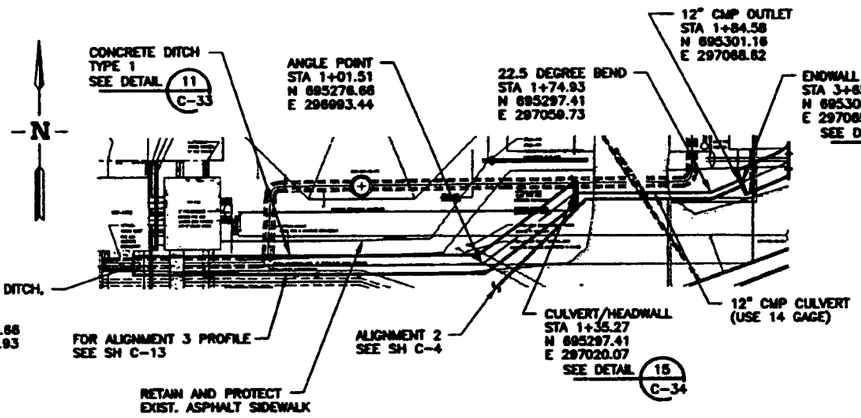

ALIGNMENT 3 PLAN

SCALE: 1"=20.0'

REF C-1 C-4 C-32

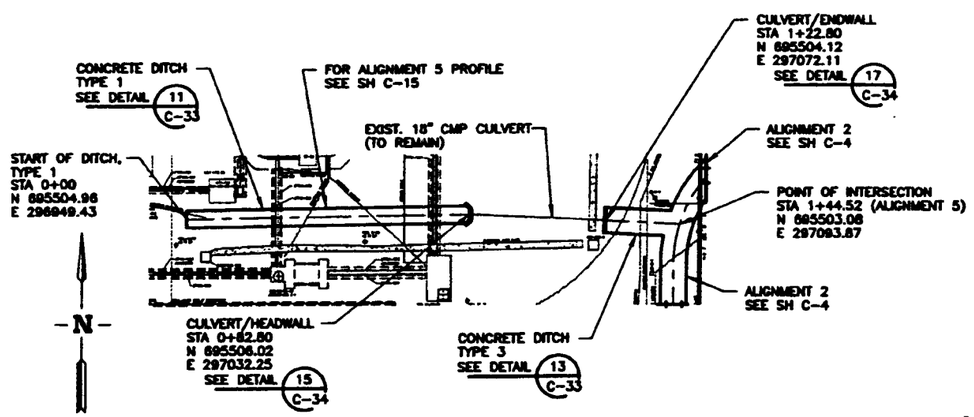

ALIGNMENT 5 PLAN

SCALE: 1"=20.0'

REF C-1 C-4

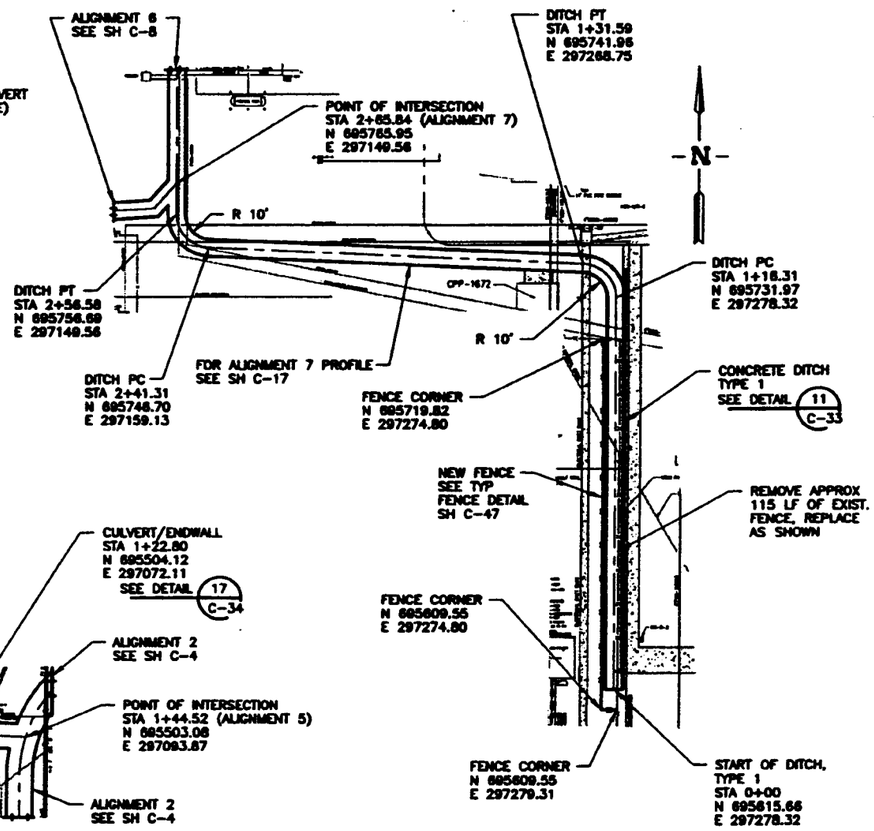

ALIGNMENT 7 PLAN

SCALE: 1"=20.0'

REF C-1 C-6

X-REFERENCE

515220

NOTES

1. HORIZONTAL COORDINATES ARE INTEC SITE SPECIFIC. VERTICAL DATUM IS NRTS (0.35' HIGHER THAN INTEC VERTICAL DATUM).

REVISION: 0
ORIGINAL SIGNED BY: KURT D. FRITZ
DATE ORIGINAL SIGNED: 9/18/2000
SEAL NUMBER: 9404
ORIGINAL STORED AT: FROM DOCUMENT CONTROL

PROFESSIONAL ENGINEER REGISTERED 9404 STATE OF IDAHO KURT D. FRITZ

FOR DRAWING INDEX SEE DRAWING NO.	515158
SCALE: 1" = 20.0'	
DESIGN PHASE:	AFC
QUALITY LEVEL:	3
SUBCONTRACT NO.	500-588051
REMEKER:	M.S. KAPTEIN
DESIGN:	KURT FRITZ
DRAWN:	ROB HERGESHEIMER
PROJECT NO.	020978
SPEC CODE	
FOR REVIEW/APPROVAL SIGNATURES SEE DAR NO. 04398	
EFFECTIVE DATE:	9/18/2000

INEEL
CH2M HILL BATTELLE, LLC

INEEL
OU 3-13 GROUP 1
TANK FARM INTERIM ACTION
PHASE 1 & 2
ALIGNMENTS 1, 3, 5, & 7 PLANS

SIZE	CADD CODE	INDEX CODE NUMBER				DWG- 515162	REV
		AREA	TYPE	Q	SEQ		
D		200	0100	65	090		
SCALE 1"=20.0"						SHEET C-3	

File: C-3.dwg
Path: G:\OU3-13-TANKFARM\9-8-00
ID: RDHS Layout Name: D Size
Saved: 9/8/00 - 1:12 P.M.

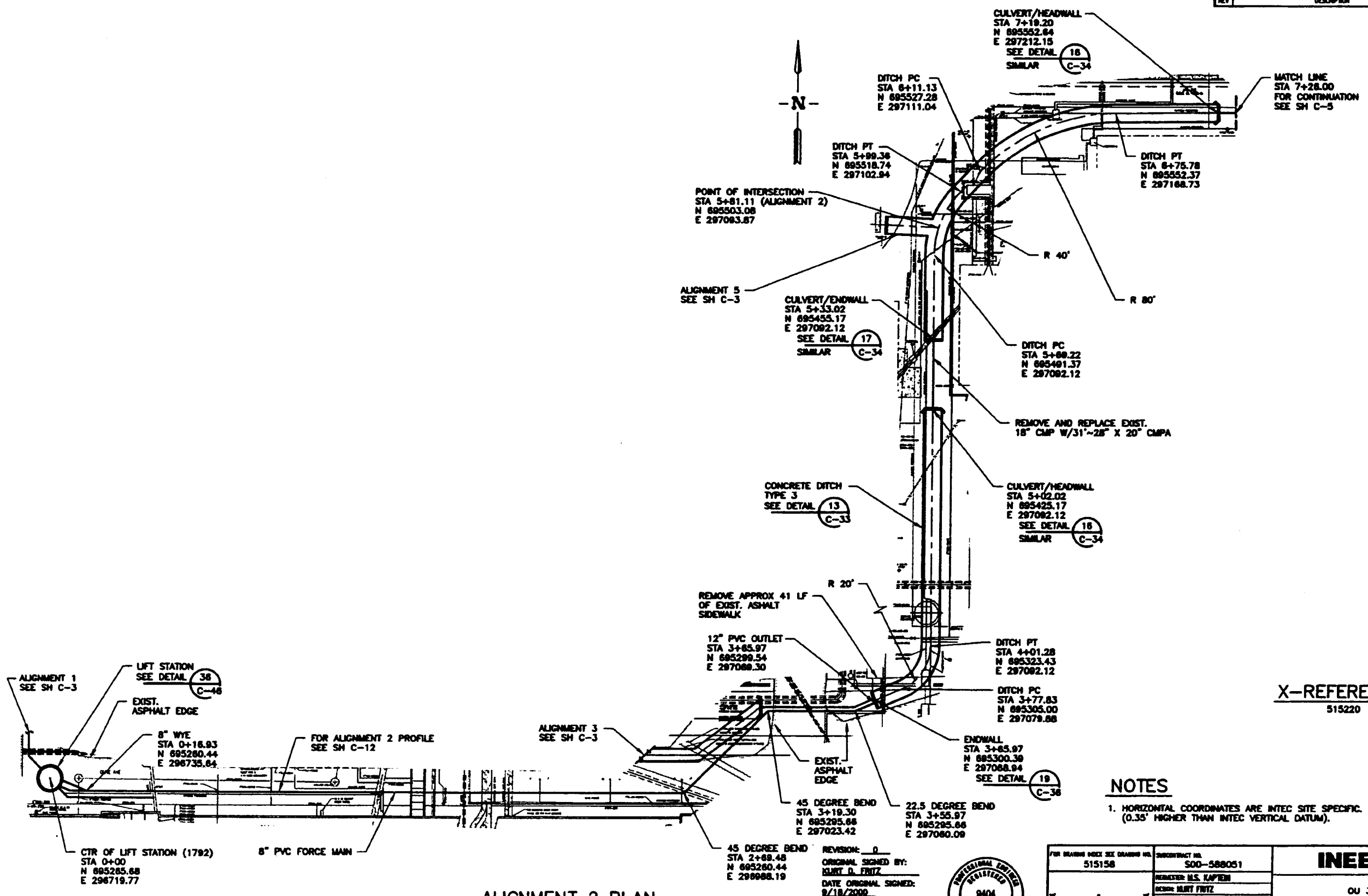

ALIGNMENT 2 PLAN

SCALE: 1"=20.0'

REF
C-1
C-3
C-9
C-32

REVISION: 0
ORIGINAL SIGNED BY: KURT D. FRITZ
DATE ORIGINAL SIGNED: 9/18/2000
SEAL NUMBER: 9404
ORIGINAL STORED AT: EROB DOCUMENT CONTROL

PROFESSIONAL ENGINEER REGISTERED 9404 STATE OF IDAHO KURT D. FRITZ

X-REFERENCE

515220

NOTES

1. HORIZONTAL COORDINATES ARE INTEC SITE SPECIFIC. VERTICAL DATUM IS NIRTS (0.35' HIGHER THAN INTEC VERTICAL DATUM).

REVISIONS		
REV	DESCRIPTION	EFFECTIVE DATE:

FOR DRAWING INDEX SEE DRAWING NO. 515158

SCALE: 1" = 20.0'

DESIGN PHASE: AFC
QUALITY LEVEL: 3

SUBCONTRACT NO. S00-588051
REMEKTER: M.S. KAPTEIN
DESIGN: KURT FRITZ
DRAWN: ROB HERGESHEIMER
PROJECT NO. 020978
SPEC CODE
FOR REVIEW/APPROVAL SIGNATURES SEE DAR NO. 68306
EFFECTIVE DATE: 9/18/2000

INEEL

INEEL
OU 3-13 GROUP 1
TANK FARM INTERIM ACTION
PHASE 1 & 2
ALIGNMENT 2 PLAN (1 OF 2)

SIZE D | CADE CODE | DRAWING NUMBER AREA 200 | SYS 0100 | D. 65 | SEQ. 090 | DWG-515163 | REV
SCALE: 1"=20.0' | SHEET C-4

File: C-4.DWG
Path: G:\OU3-13-TANKFARM\9-8-00 Sebastian/RB/00 - 2:07 P.M.
ID: RDH5
Layout Name: D Size

REVISIONS		
REV	DESCRIPTION	EFFECTIVE DATE:

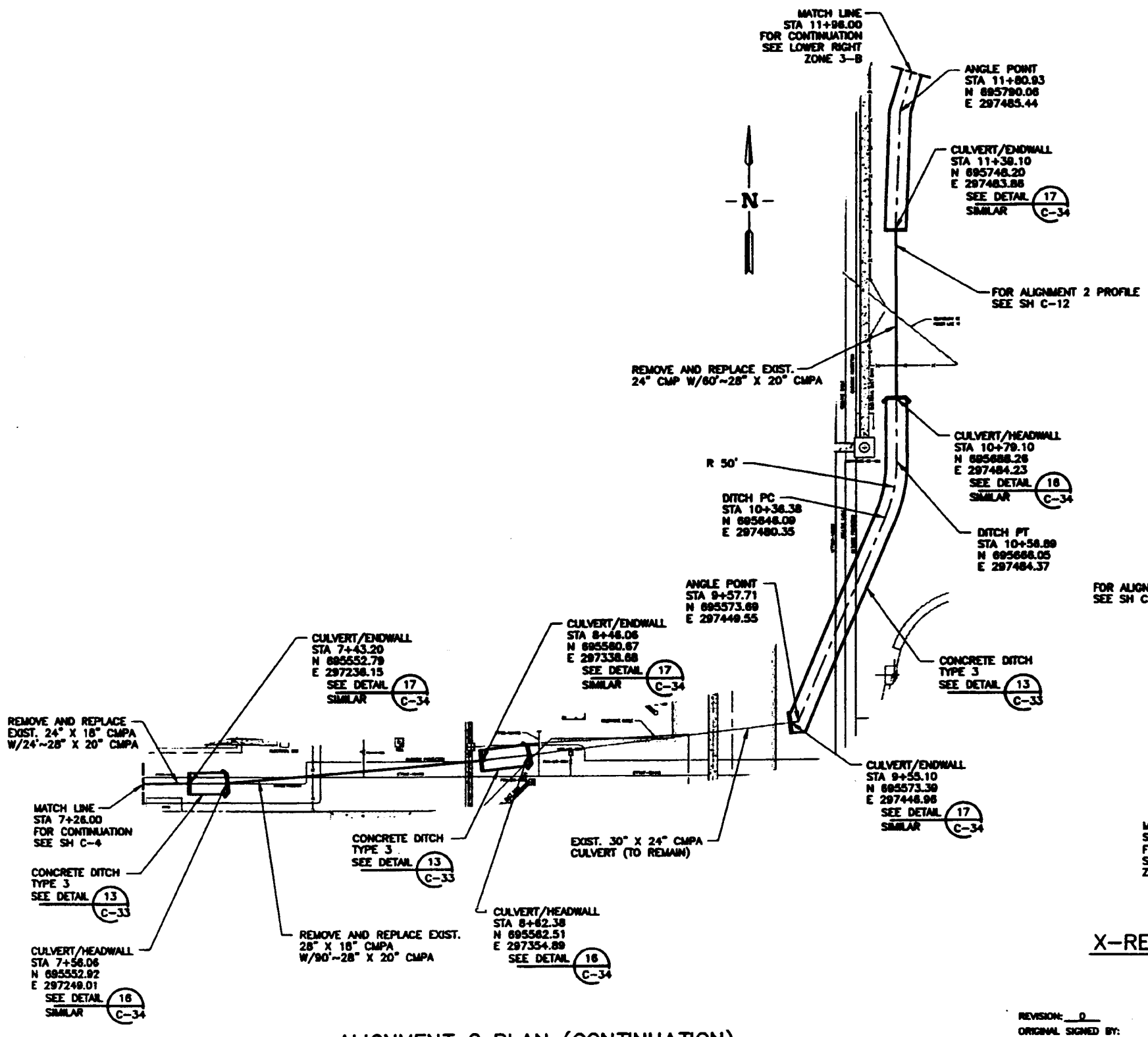

ALIGNMENT 2 PLAN (CONTINUATION)

SCALE: 1"=20.0'

REF C-1

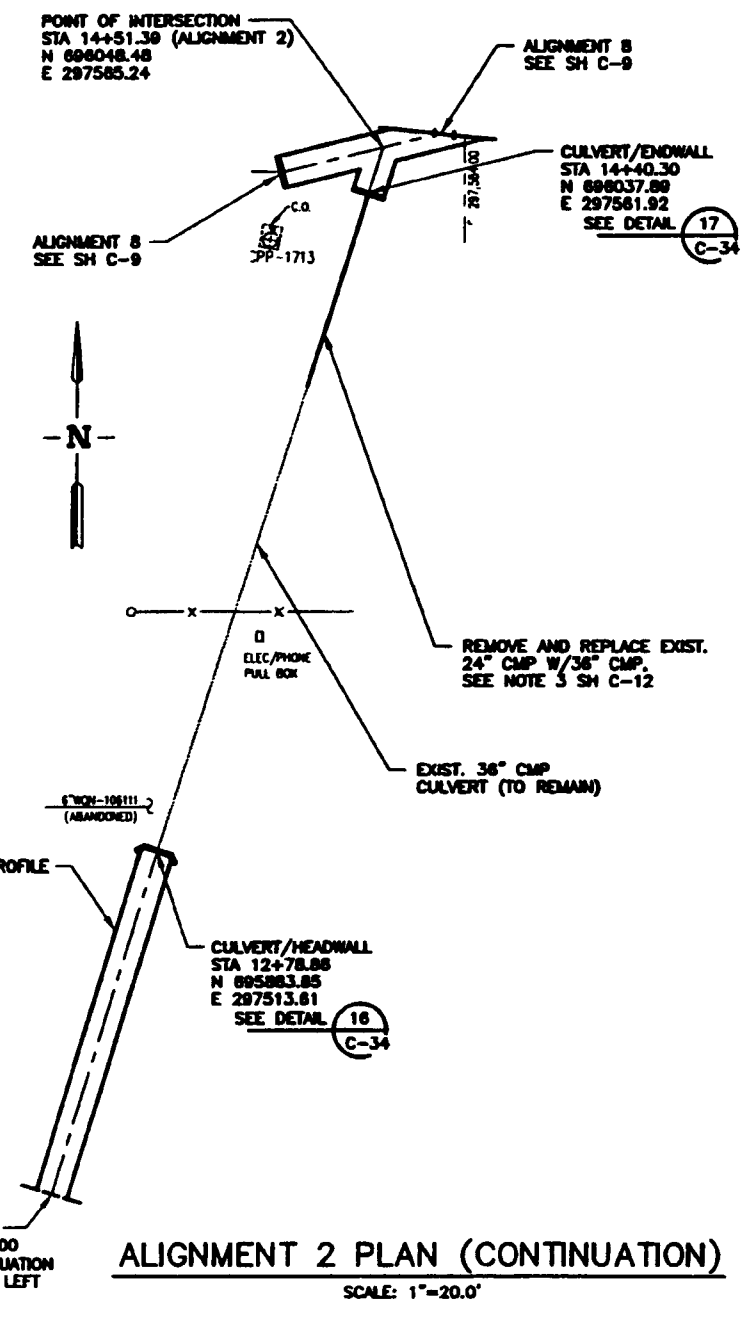

ALIGNMENT 2 PLAN (CONTINUATION)

SCALE: 1"=20.0'

X-REFERENCE

515220

NOTES

1. HORIZONTAL COORDINATES ARE INTEC SITE SPECIFIC. VERTICAL DATUM IS NIRTS (0.35' HIGHER THAN INTEC VERTICAL DATUM).

REVISION: 0
ORIGINAL SIGNED BY: KURT D. FRITZ
DATE ORIGINAL SIGNED: 9/18/2000
SEAL NUMBER: 9404
ORIGINAL STORED AT: EDMS DOCUMENT CONTROL

PROFESSIONAL ENGINEER REGISTERED 9404 STATE OF IDAHO KURT D. FRITZ

FOR DRAWING INDEX SEE DRAWING NO.	515158
SCALE: 1" = 20.0'	
DESIGN PHASE:	AFC
QUALITY LEVEL:	3
SUBCONTRACT NO.	S00-588051
REDRAWER:	M.S. KAPTEIN
REVIEW:	KURT FRITZ
DRAWN:	ROB HENGESHEIMER
PROJECT NO.	020878
SPEC CODE	
FOR REVIEW/APPROVAL SIGNATURES SEE DAR NO. 68386	
EFFECTIVE DATE:	9/18/2000

INEEL
BATTELLE ENERGY ALLIANCE, LLC

INEEL
OU 3-13 GROUP 1
TANK FARM INTERIM ACTION
PHASE 1 & 2
ALIGNMENT 2 PLAN (2 OF 2)

SIZE	CADD CODE	INDEX CODE NUMBER AREA	TYPE	A	SEQ	DWG-	REV
D		200	0100	65	080	515164	

SCALE: 1"=20.0' SHEET C-5

File: C-5.DWG
Path: G:\OU3-13-TANKFARM\8-8-00\
ID: RDHS Layout Name: 0 Size
Saved: 8/8/00 - 2:38 P.M.

REVISIONS		
REV	DESCRIPTION	EFFECTIVE DATE:

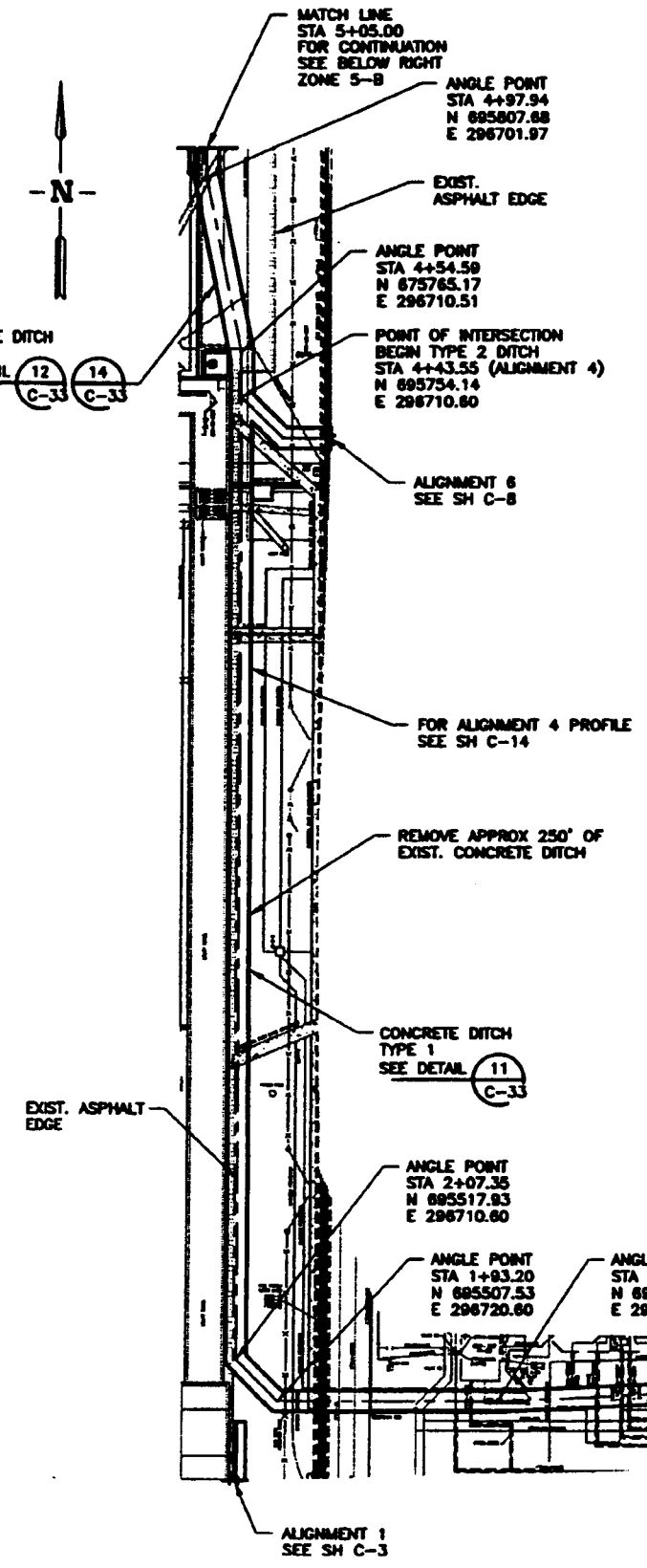

ALIGNMENT 4 PLAN

SCALE: 1"=20.0'

REF C-1 C-29 C-8 C-30

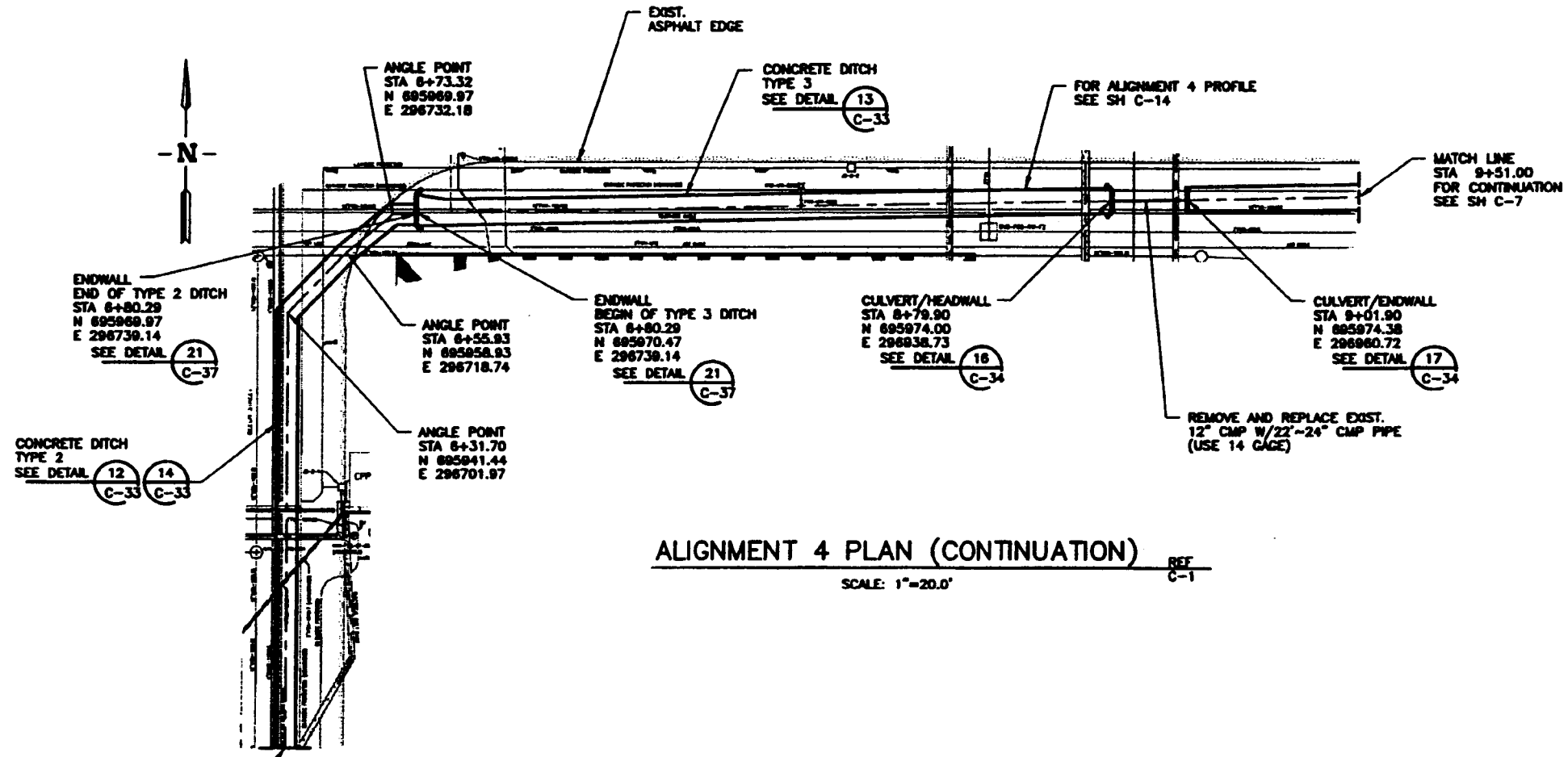

ALIGNMENT 4 PLAN (CONTINUATION)

SCALE: 1"=20.0'

REF C-1

X-REFERENCE

515220

NOTES

1. HORIZONTAL COORDINATES ARE INTEC SITE SPECIFIC. VERTICAL DATUM IS NRTS (0.35' HIGHER THAN INTEC VERTICAL DATUM).

REVISION: 0
ORIGINAL SIGNED BY: KURT D. FRITZ
DATE ORIGINAL SIGNED: 9/18/2000
SEAL NUMBER: 9404
ORIGINAL STORED AT: EROB DOCUMENT CONTROL

PROFESSIONAL ENGINEER REGISTERED 9404 STATE OF IDAHO KURT D. FRITZ

FOR DRAWING INDEX SEE DRAWING NO. 515158	SUBCONTRACT NO. S00-588051	INEEL
SCALE: 1" = 20.0'	DESIGNER: M.S. KAPTEIN	INEEL OU 3-13 GROUP 1 TANK FARM INTERIM ACTION PHASE 1 & 2 ALIGNMENT 4 PLAN (1 OF 2)
	DESIGN: KURT FRITZ	
	DRAWN: ROB HERGESHEIMER	
	PROJECT NO. 020878	
	SPEC CODE	
DESIGN PHASE: AFC	FOR REVIEW/APPROVAL SIGNATURES SEE DAR NO. 68366	SIZE D · CAME CODE · WORK CODE NUMBER JOB TYPE 1 0 SEC 200 0100 65 090 · DWG-515165 · REV · SCALE: 1"=20.0' · SHEET C-6
QUALITY LEVEL: 3	EFFECTIVE DATE: 9/18/2000	

File: C-6.DWG
Path: C:\OU3-13-TANKFARM\0-8-AB
Layout Name: D Size
Plotted: 9/18/2000 - 2:39 P.M.

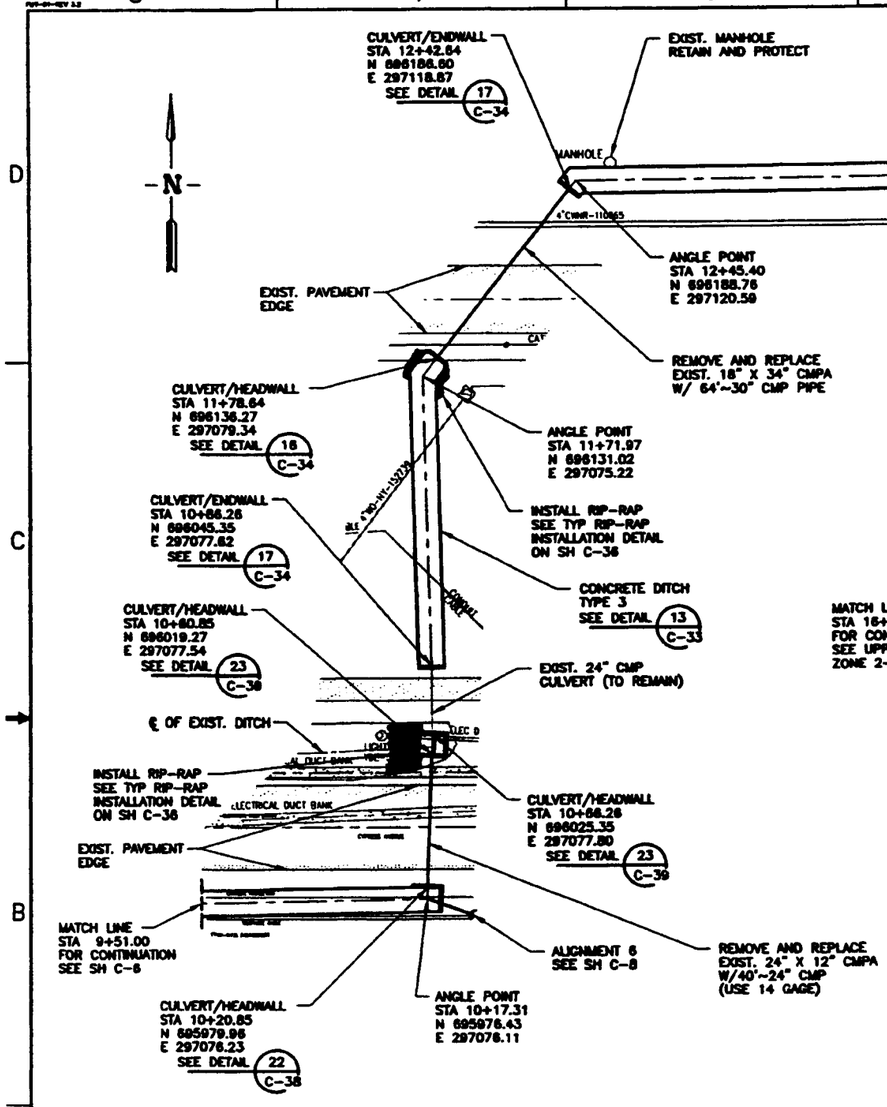

ALIGNMENT 4 PLAN (CONTINUATION) REF C-1 C-29

SCALE: 1"=20.0'

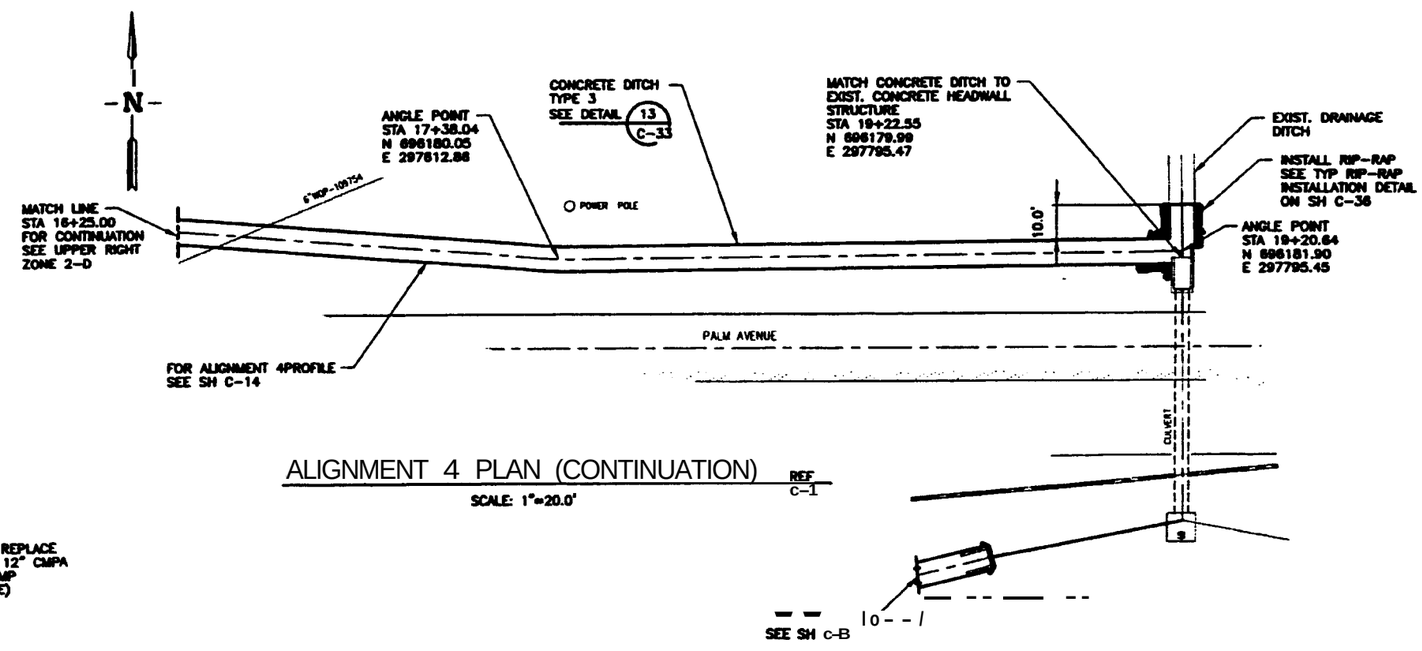

ALIGNMENT 4 PLAN (CONTINUATION) REF C-1

SCALE: 1"=20.0'

X-REFERENCE
515220

NOTES

1. HORIZONTAL COORDINATES ARE INTEC SITE SPECIFIC. VERTICAL DATUM IS NIRTS (0.35' HIGHER THAN INTEC VERTICAL DATUM).

REVISION: 0
ORIGINAL SIGNED BY: KURT D. FRITZ
DATE ORIGINAL SIGNED: 9/18/2000
SEAL NUMBER: 9404
ORIGINAL STORED AT: ENGR DOCUMENT CONTROL

PROFESSIONAL ENGINEER REGISTERED 9404 STATE OF IDAHO KURT D. FRITZ

FOR DRAWING INDEX SEE DRAWING NO. 515158	SUBCONTRACT NO. S00-588051	INEEL
SCALE: 1" = 20.0'	REVIEWER: M.S. KAPTEIN	INEEL OU 3-13 GROUP 1 TANK FARM INTERIM ACTION PHASE 1 & 2 ALIGNMENT 4 PLAN (2 OF 2)
	DESIGN: KURT FRITZ	
	DRAWN: ROB HERKESHEIMER	
	PROJECT NO. 020978	
	SPEC CODE	
DESIGN PHASE: AFC	FOR REVIEW/APPROVAL SIGNATURES SEE DAR NO. 68388	SIZE D / CADD CODE / AREA 200 / SYS. 0100 / FA. 65 / SEQ. 090 / DWG-515166 / REV
QUALITY LEVEL: 3	EFFECTIVE DATE: 9/18/2000	SCALE: 1"=20.0' / SHEET C-7

File: C-7.DWG
Path: C:\OU3-13-TANKFARM\9-8-00 Layout Name: D Size
ID: RDH5 Saturday 09/09/00 - 4:28 P.M.

REVISIONS		
REV	DESCRIPTION	EFFECTIVE DATE

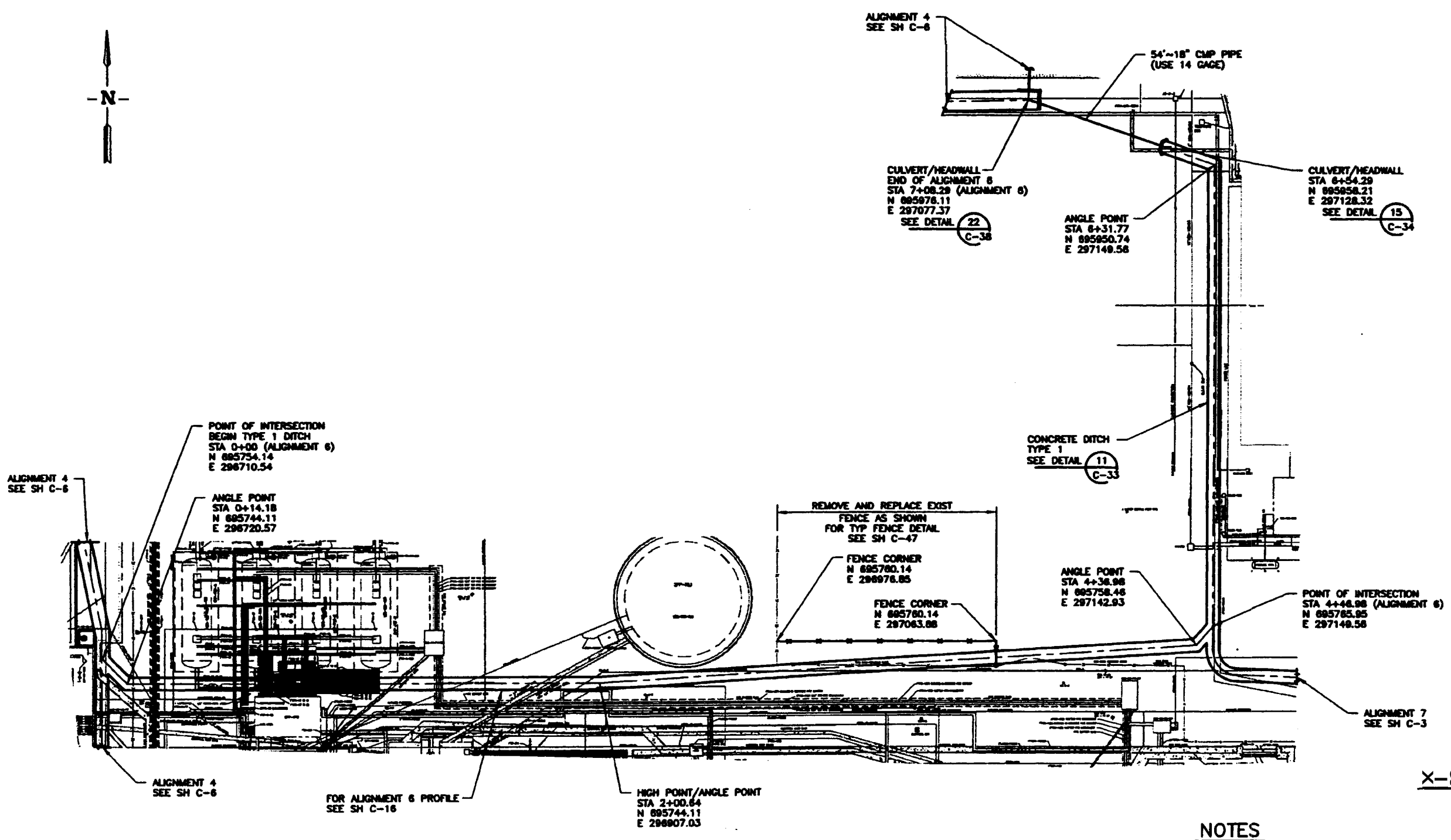

X-REFERENCE
515220

NOTES

1. HORIZONTAL COORDINATES ARE INTEC SITE SPECIFIC. VERTICAL DATUM IS NRTS (0.35' HIGHER THAN INTEC VERTICAL DATUM).

ALIGNMENT 6 PLAN

SCALE: 1"=20.0'

REF
C-1
C-6
C-7
C-29

REVISION: 0
ORIGINAL SIGNED BY: KURT D. FRITZ
DATE ORIGINAL SIGNED: 9/18/2000
SEAL NUMBER: 9404
ORIGINAL STORED AT: EROB DOCUMENT CONTROL

PROFESSIONAL ENGINEER REGISTERED 9404 STATE OF IDAHO KURT D. FRITZ

FOR DRAWING INDEX SEE DRAWING NO. 515158	SUBCONTRACT NO. 500-588051	INEEL
SCALE: 1" = 20.0'	REDACTOR: M.S. KAPTEIN	INEEL OU 3-13 GROUP 1 TANK FARM INTERIM ACTION PHASE 1 & 2 ALIGNMENT 6 PLAN
	DESIGN: KURT FRITZ	
	DRAWN: ROB HERGESHEIMER	
	PROJECT NO. 020878	
	SPEC CODE	
DESIGN PHASE: AFC	FOR REVIEW/APPROVAL SIGNATURES SEE DWG NO. 68386	SIZE D; CADD CODE; INDEX CODE NUMBER 200 0100 85 000; DWG-515167; REV
QUALITY LEVEL: 3	EFFECTIVE DATE: 9/18/2000	SCALE: 1"=20.0'; SHEET C-8

File: C-8.DWG
Path: G:\OU3-13-TANKFARM\B-8-RDH\00 - 3:07 P.M.
ID: RDHS
Layout Name: D Size

REV	DESCRIPTION	EFFECTIVE DATE

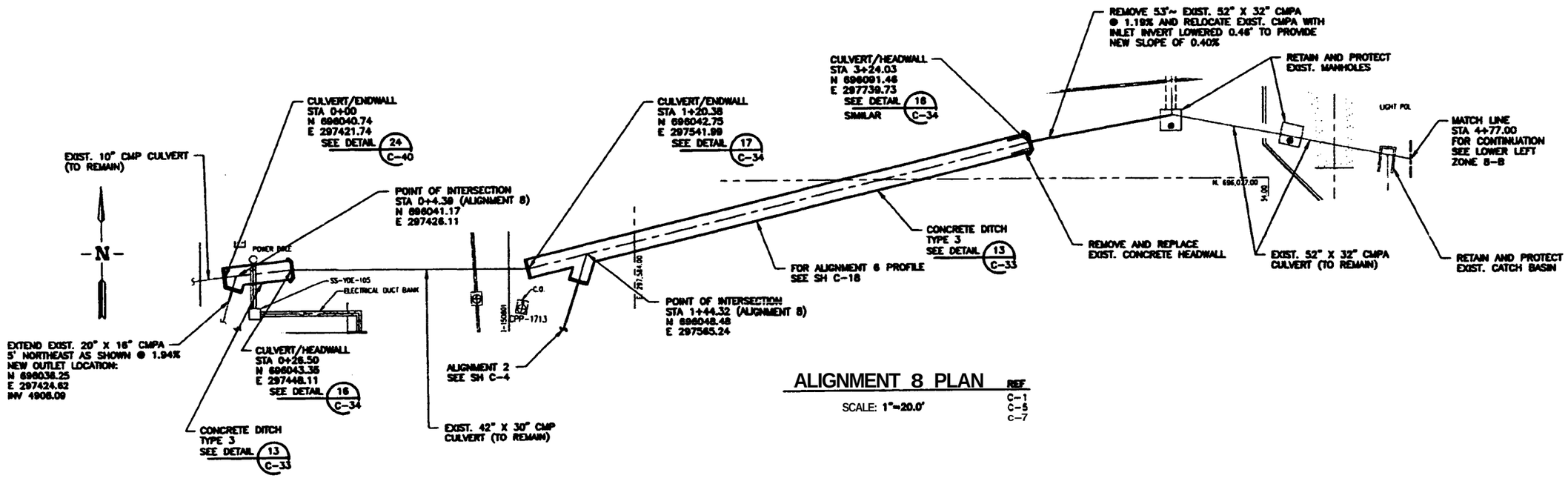

ALIGNMENT 8 PLAN

SCALE: 1"=20.0'

REF
C-1
C-5
C-7

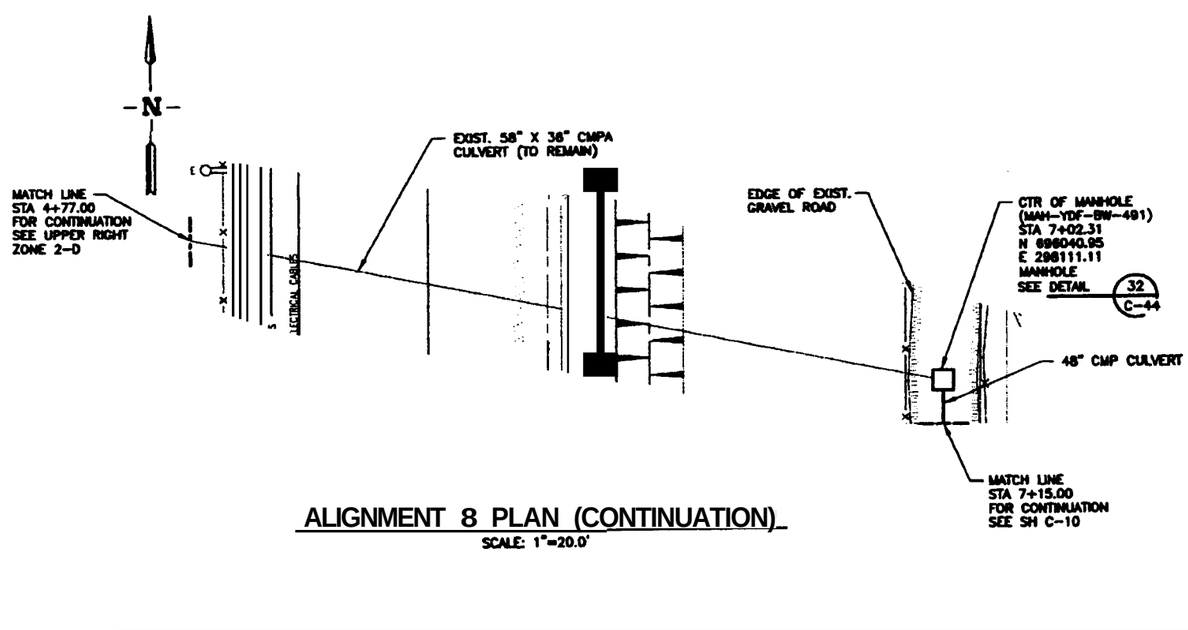

ALIGNMENT 8 PLAN (CONTINUATION)

SCALE: 1"=20.0'

X-REFERENCE

515220

NOTES

1. HORIZONTAL COORDINATES ARE INTEC SITE SPECIFIC. VERTICAL DATUM IS NRTS (0.35' HIGHER THAN INTEC VERTICAL DATUM).

REVISION: 0
ORIGINAL SIGNED BY: KURT D. FRITZ
DATE ORIGINAL SIGNED: 8/18/2000
SEAL NUMBER: 9404
ORIGINAL STORED AT: ERDB DOCUMENT CONTROL

PROFESSIONAL ENGINEER REGISTERED 9404 STATE OF IDAHO KURT D. FRITZ

FOR DRAWING INDEX SEE DRAWING NO. 515158	SUBCONTRACT NO. S00-588051
SCALE: 1" = 20.0'	ENGINEER: M.S. KAPTEIN
	DESIGN: KURT FRITZ
	DRAWN: BOB HERGESHEIMER
	PROJECT NO. 020878
	SPEC CODE
DESIGN PHASE: AFC	FOR REVIEW/APPROVAL SIGNATURES SEE DAR NO. 04388
QUALITY LEVEL: 3	EFFECTIVE DATE: 8/18/2000

INEEL
LOCKHEED MARTIN IDAHO TECHNOLOGIES

INEEL
OU 3-13 GROUP 1
TANK FARM INTERIM ACTION
PHASE 1 & 2
ALIGNMENT 8 PLAN (1 OF 2)

SIZE	CADD CODE	WORK CODE NUMBER				DWG-515168	REV
		AREA	SYS	TYP	SEQ		
D		209	0100	65	090		

SCALE: 1"=20'.0" SHEET C-9

File: C-9.DWG
Path: G:\013-13-TANK FARM\8-6-8
ID: R2H3
Layout Name: 0 Size
Date: 08/08/00 - 3:12 P.M.

REVISIONS		
REV	DESCRIPTION	EFFECTIVE DATE:

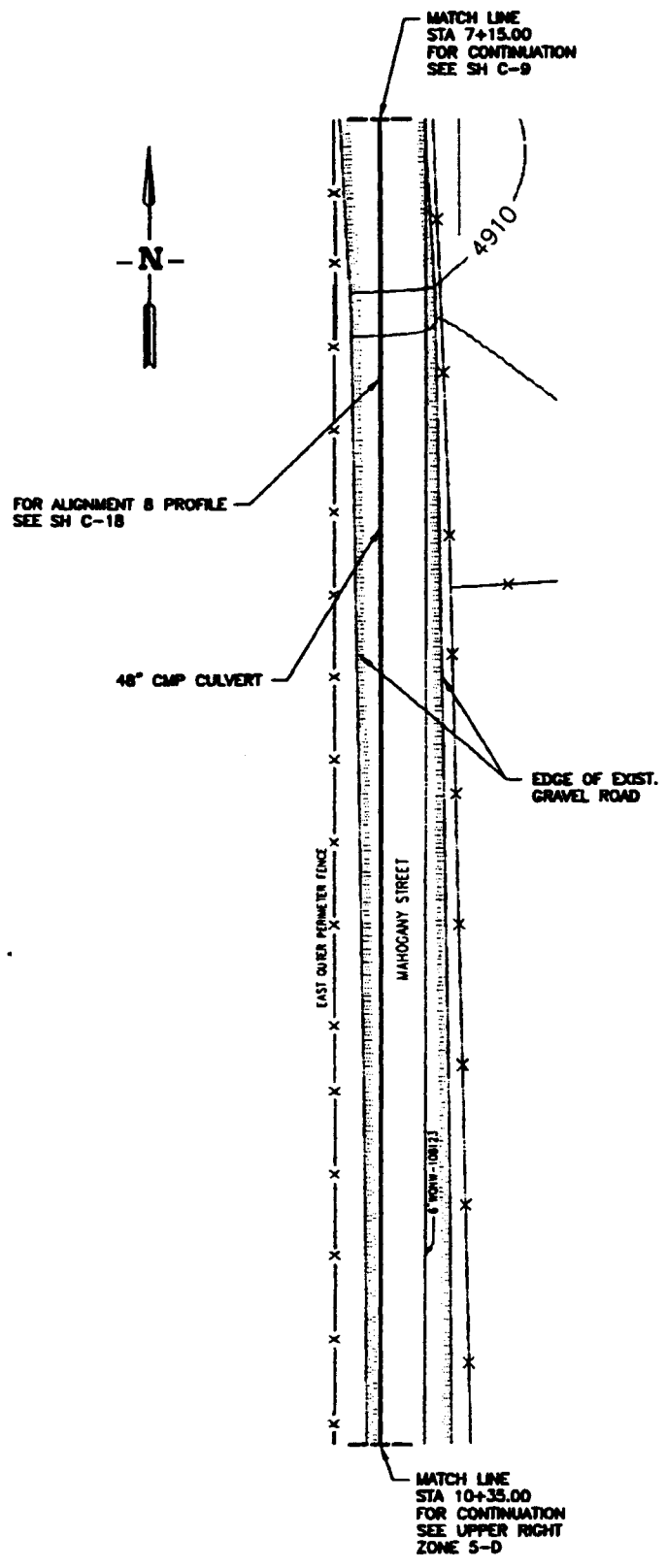

ALIGNMENT 8 PLAN (CONTINUATION)

SCALE: 1"=20.0'

REF
C-1
C-19

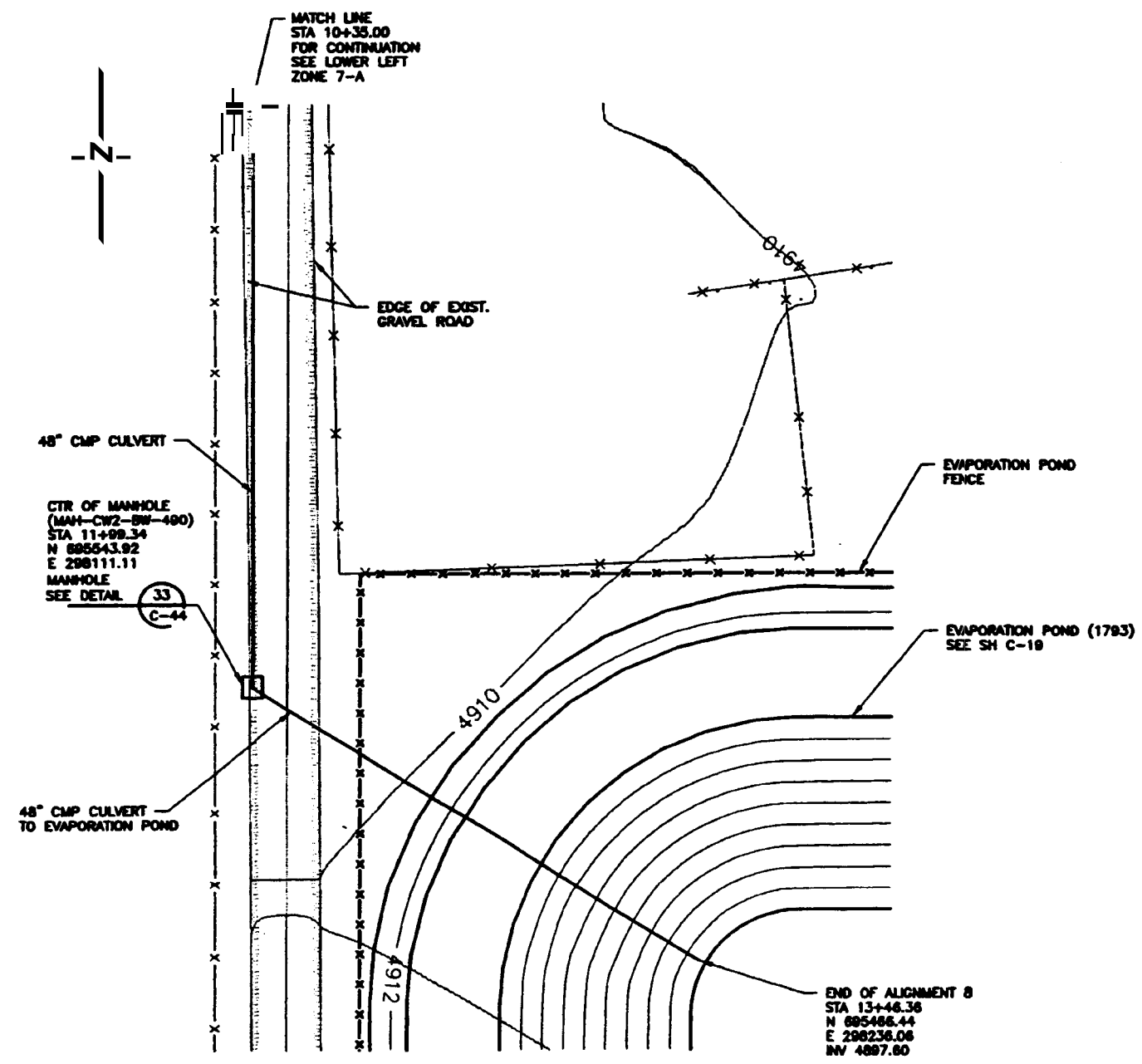

ALIGNMENT 8 PLAN (CONTINUATION)

SCALE: 1"=20.0'

X-REFERENCE
515220

NOTES

1. HORIZONTAL COORDINATES ARE INTEC SITE SPECIFIC. VERTICAL DATUM IS NRTS (0.35' HIGHER THAN INTEC VERTICAL DATUM).

REVISION: 0
ORIGINAL SIGNED BY: KURT D. FRITZ
DATE ORIGINAL SIGNED: 9/18/2000
SEAL NUMBER: 9404
ORIGINAL STORED AT: ENDB DOCUMENT CONTROL

PROFESSIONAL ENGINEER REGISTERED 9404 STATE OF IDAHO KURT D. FRITZ

FOR DRAWING INDEX SEE DRAWING NO. 515158	SUBCONTRACT NO. S00-588051
SCALE: 1" = 20.0'	DESIGNER: M.S. KAPTEIN
	REVIEWER: KURT FRITZ
	DRAWN: ROB HENGESHEMER
	PROJECT NO. 020878
	SPEC CODE
DESIGN PHASE: AFC	FOR REVIEW/APPROVAL SIGNATURES SEE DWG NO. 515169
QUALITY LEVEL: 3	EFFECTIVE DATE: 9/18/2000

INEEL
INEEL
OU 3-13 GROUP 1
TANK FARM INTERIM ACTION
PHASE 1 & 2
ALIGNMENT 8 PLAN (2 OF 2)

SIZE	CAGE CODE	INDEX CODE NUMBER				DWG-	REV
		DWG #	SUF	F.G.	CODE	515169	
D		200	0100	85	090		

SCALE: 1"=20.0' SHEET C-10

File: C-10.DWG Dr: RDHS Layout Name: 0 Site
Path: G:\OU3-13-TANKFARM\8-8-00\ Saved: 9/8/2000 - 3:09 P.M.

REVISIONS		
REV	DESCRIPTION	EFFECTIVE DATE:

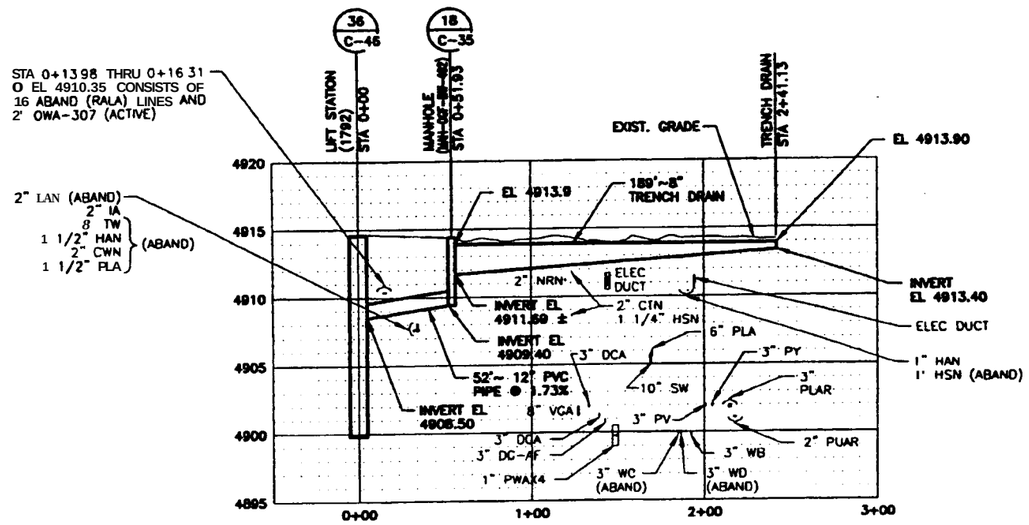

ALIGNMENT 1 PROFILE

SCALE: HOR 1"=40'
VER 1"=5'

REF
C-1
C-3

NOTES

1. ELEVATIONS AND LOCATIONS OF ELECTRICAL DUCT BANKS AND PIPES SHOWN SHADED ARE APPROXIMATE ELEVATIONS AND LOCATIONS ONLY.
2. HORIZONTAL COORDINATES ARE INTEC SITE SPECIFIC. VERTICAL DATUM IS NRTS (0.35' HIGHER THAN INTEC VERTICAL DATUM).

REVISION: 0
ORIGINAL SIGNED BY: KURT D. FRITZ
DATE ORIGINAL SIGNED: 9/18/2000
SEAL NUMBER: 9404
ORIGINAL STORED AT: EROB DOCUMENT CONTROL

PROFESSIONAL ENGINEER REGISTERED 9404 STATE OF IDAHO KURT D. FRITZ

FOR DRAWING INDEX SEE DRAWING NO. 515156	SUBCONTRACT NO. S00-588051	INEEL LOCKHEED MARTIN IDAHO, LLC
HORIZONTAL 1"=40' VERTICAL 1"=5'	REQUESTER: M.S. KAPTEIN DESIGN: KURT FRITZ DRAWN: ROB HERGESHEIMER PROJECT NO. 020978 SPEC CODE	INEEL OU 3-13 GROUP 1 TANK FARM INTERIM ACTION PHASE 1 & 2 ALIGNMENT 1 PROFILE
DESIGN PHASE: AFC	FOR REVIEW/APPROVAL SIGNATURES SEE BAR NO. 08386	SIZE D · CADD CODE · INDEX CODE NUMBER AREA 200 TYP 0100 A 02 DISC 000 · DWG-515170 · REV
QUALITY LEVEL: 3	EFFECTIVE DATE: 9/18/2000	SCALE: NOTED · SHEET C-11

File: C-11.DWG Path: G:\0013-13-MWD\Acad\1-4-00 ID: RDH5 Drawn in Model Space Date: 09/18/00 - 3:38 P.M.

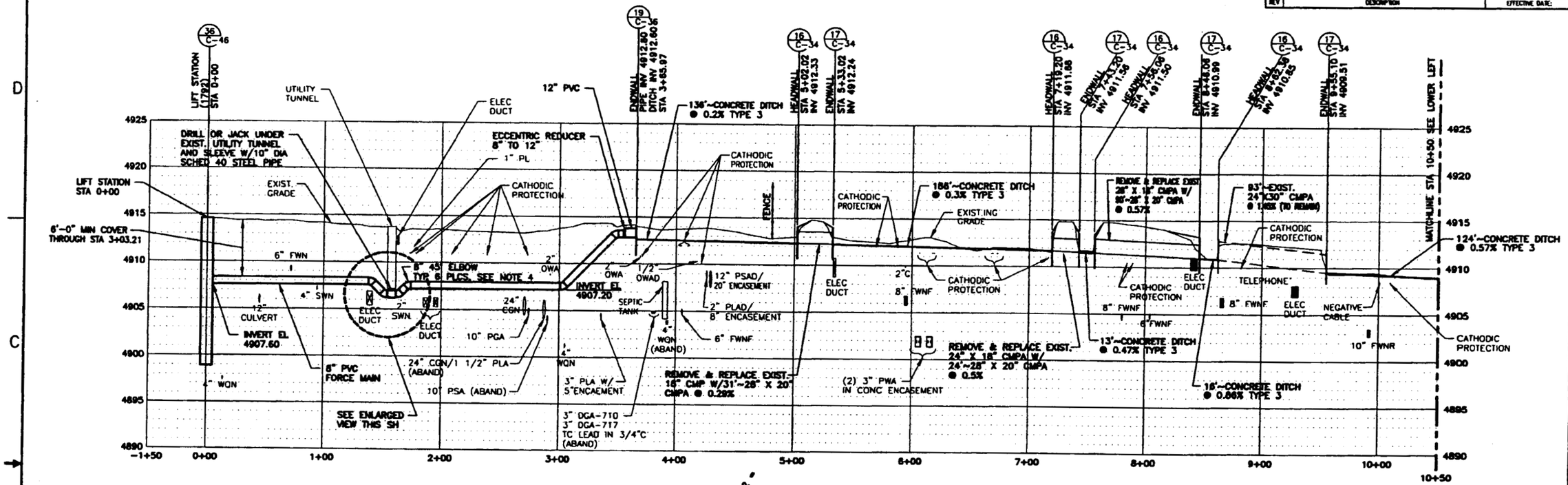

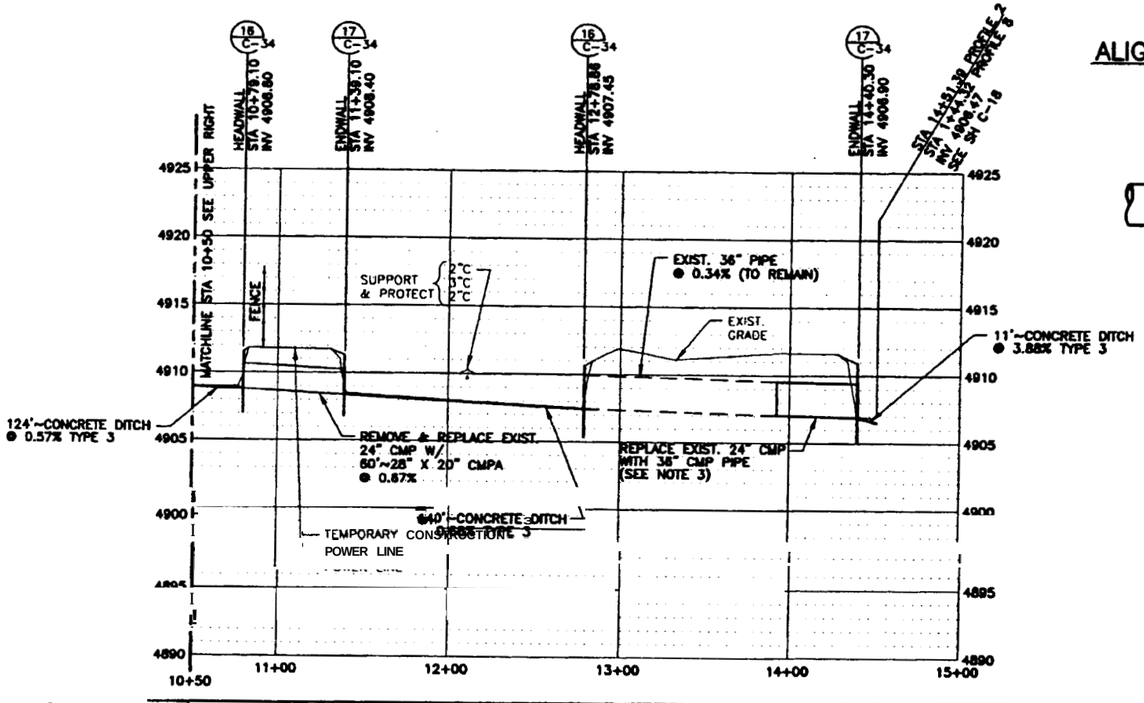

ALIGNMENT 2 PROFILE

SCALE: HOR 1"=40'
VER 1"=5'

REF
C-11
C-14
C-5

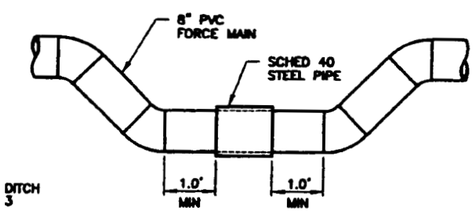

ENLARGED VIEW

NTS
SEE NOTE 4

NOTES

1. ELEVATIONS AND LOCATIONS OF ELECTRICAL DUCT BANKS AND PIPES SHOWN SHADED ARE APPROXIMATE ELEVATIONS AND LOCATIONS ONLY.
2. HORIZONTAL COORDINATES ARE INTEC SITE SPECIFIC. VERTICAL DATUM IS NRTS (0.35' HIGHER THAN INTEC VERTICAL DATUM).
3. FIELD SURVEY INDICATES NORTH END OF CULVERT IS 24" DIAMETER. FIELD VERIFY BEGINNING OF 24" DIAMETER PIPE, REMOVE AND REPLACE WITH NEW 36" DIAMETER CMP.
4. MECHANICAL JOINT RESTRAINTS ARE REQUIRED AT ALL BENDS AND AT JOINTS WITHIN 5 FEET OF BENDS.

REVISIONS

REV	DESCRIPTION	EFFECTIVE DATE

REVISION: 0
ORIGINAL SIGNED BY:
KURT D. FRITZ
DATE ORIGINAL SIGNED: 9/18/2000
SEAL NUMBER: 9404
ORIGINAL STORED AT: EROB DOCUMENT CONTROL

PROFESSIONAL ENGINEER REGISTERED 9404 STATE OF IDAHO KURT D. FRITZ

FOR DRAWING INDEX SEE DRAWING NO. | SUBCONTRACT NO.

HORIZONTAL 1"=40'
VERTICAL 1"=5'

DESIGN PHASE: AFC
QUALITY LEVEL: 3

REQUESTER: M.S. KAPTEIN
DESIGN: KURT FRITZ
DRAWN: ROB HERGESHEIMER
PROJECT NO. 020078
SPEC CODE
FOR REVIEW/APPROVAL SIGNATURES SEE DWG NO. 00306
EFFECTIVE DATE: 9/18/2000

INEEL
OU 3-13 GROUP 1
TANK FARM INTERIM ACTION
PHASE 1 & 2
ALIGNMENT 2 PROFILE

SIZE D | CADD CODE | INDEX CODE NUMBER AREA 200 TYPE 0100 A 02 SEQ 080 | DWG- 515171 | REV
SCALE: NOTED | SHEET C-12

REV	DESCRIPTION	EFFECTIVE DATE:
	REVISIONS	

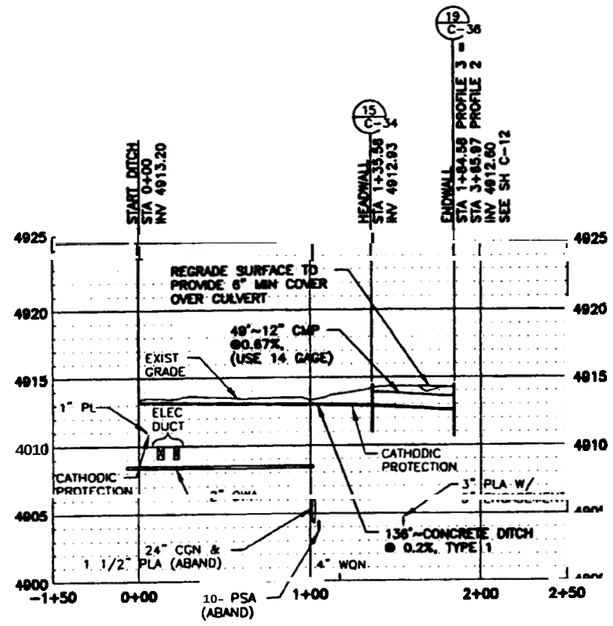

~~ALIGNMENT 3 PROFILE~~

SCALE: ~~VER 1"=5'~~

REF ~~C-4~~ C-3

NOTES

1. ELEVATIONS AND LOCATIONS OF ELECTRICAL DUCT BANKS AND PIPES SHOWN SHADED ARE APPROXIMATE ELEVATIONS AND LOCATIONS ONLY.
2. HORIZONTAL COORDINATES ARE INTEC SITE SPECIFIC. VERTICAL DATUM IS NRTS (0.35' HIGHER THAN INTEC VERTICAL DATUM).

REVISION: 0
ORIGINAL SIGNED BY: KURT D. FRITZ
DATE ORIGINAL SIGNED: 9/18/2000
SEAL NUMBER: 9404
ORIGINAL STORED AT: EROB DOCUMENT CONTROL

PROFESSIONAL ENGINEER REGISTERED 9404 STATE OF IDAHO KURT D. FRITZ

FOR DRAWING INDEX SEE DRAWING NO. 515158	SUBCONTRACT NO. S00-588051	INEEL	
HORIZONTAL 1"=40' VERTICAL 1"=5'	REGISTER: M.S. KAPTEIN; DESIGN: KURT FRITZ; DRAWN: ROB HERGESHEIMER; PROJECT NO. 020878; SPEC CODE	INEEL OU 3-13 GROUP 1 TANK FARM INTERIM ACTION PHASE 1 & 2 ALIGNMENT 3 PROFILE	
DESIGN PHASE: AFC	FOR REVIEW/APPROVAL SIGNATURES SEE DWG NO. 515386	SIZE D; CADD CODE; INDEX CHART REFERENCE: AREA 200, TYPE 0100, G 02, DWG 080; DWG-515172; REV	
QUALITY LEVEL: 3	EFFECTIVE DATE: 9/18/2000	SCALE: NOTED	SHEET C-13

File: C-13.DWG Path: G:\003-13-TANK FARM\9-18-00 ID: RDHS Drawn: RDB Modified Space: 10/18/00 - 3:38 p.m.

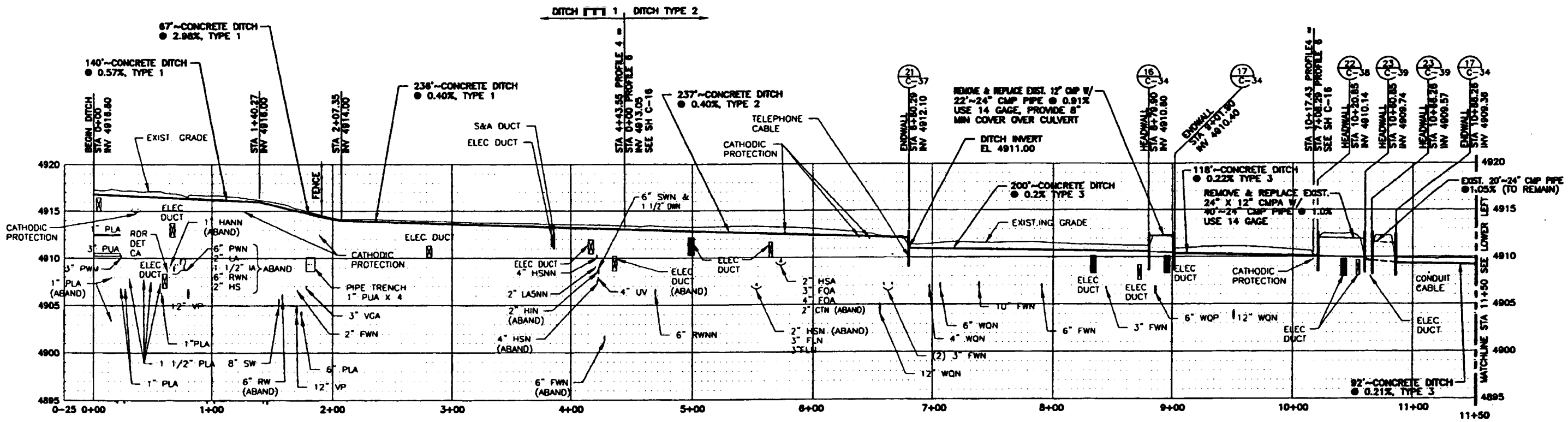

ALIGNMENT 4 PROFILE

SCALE: HOR 1"=40'
VER 1"=5'

REF
C-1
C-6
C-7
C-16

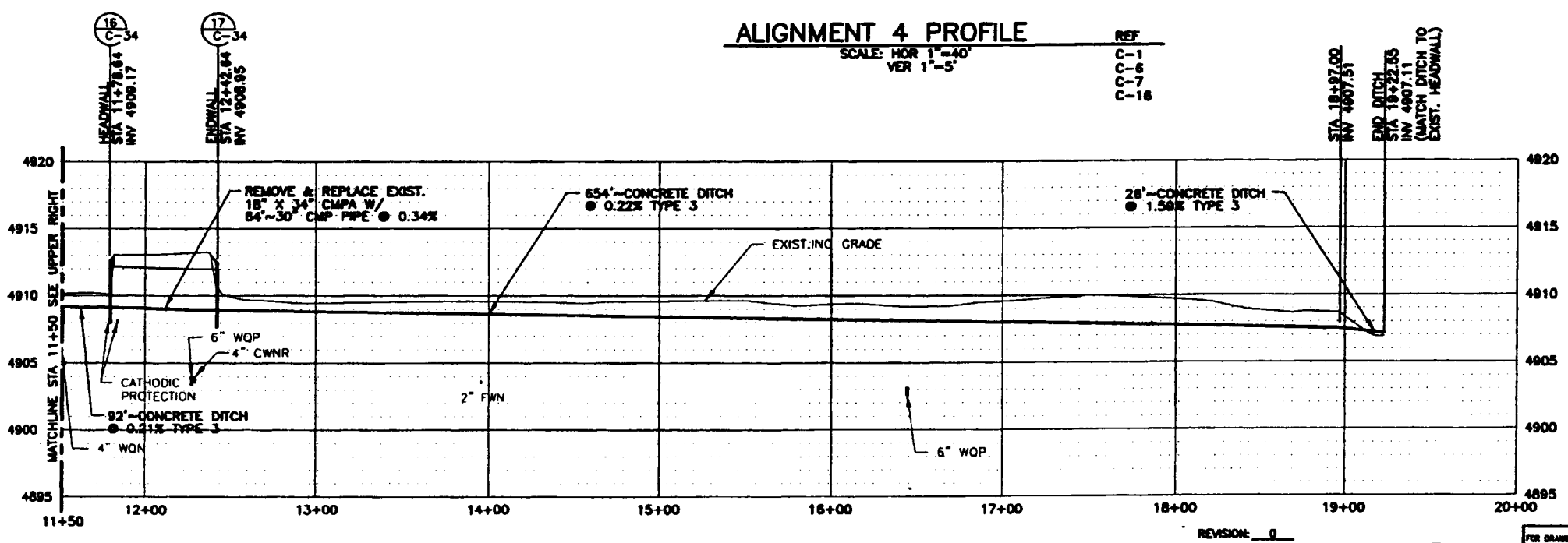

NOTES

1. ELEVATIONS AND LOCATIONS OF ELECTRICAL DUCT BANKS AND PIPES SHOWN SHADED ARE APPROXIMATE ELEVATIONS AND LOCATIONS ONLY.
2. HORIZONTAL COORDINATES ARE INTEC SITE SPECIFIC. VERTICAL DATUM IS NRTS (0.35' HIGHER THAN INTEC VERTICAL DATUM).

REVISION: 0
ORIGINAL SIGNED BY: KURT D. FRITZ
DATE ORIGINAL SIGNED: 9/18/2000
SEAL NUMBER: 9404
ORIGINAL STORED AT: CROB DOCUMENT CONTROL

PROFESSIONAL ENGINEER REGISTERED 9404 STATE OF IDAHO KURT D. FRITZ

FOR DRAWING INDEX SEE DRAWING NO. 515158	SUBCONTRACT NO. S00-588051
HORIZONTAL 1"=40' VERTICAL 1"=5'	DESIGNER: M.S. KAPREIN; DESIGN: KURT FRITZ; DRAWN: ROB HERGESHEIMER; PROJECT NO. 020878; SPEC CODE
DESIGN PHASE: AFC	FOR REVIEW/APPROVAL SIGNATURES SEE DAR NO. 00386
QUALITY LEVEL: 3	EFFECTIVE DATE: 9/18/2000

INEEL

INEEL
OU 3-13 GROUP 1
TANK FARM INTERIM ACTION
PHASE 1 & 2
ALIGNMENT 4 PROFILE

SIZE	CADD CODE	WORK CODE NUMBER	DWG-515173	REV
D		AREA TYPE B DISC 200 0100 02 090	SHEET C-14	

SCALE: NOTED

File: C-14.DWG
Path: G:\003-13-TANKFARM\9-18-00 - 3:42 P.M.
ID: RDH3
Drawn in Model Space

REVISIONS		
REV	DESCRIPTION	EFFECTIVE DATE

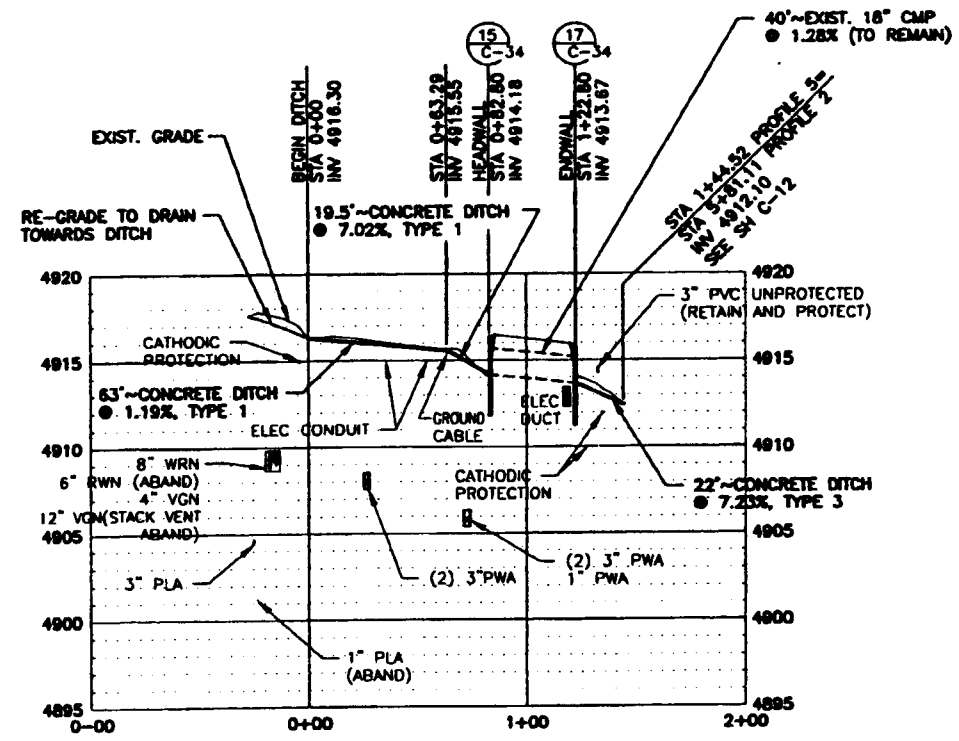

ALIGNMENT 5 PROFILE

SCALE: HOR 1"=40'
VER 1"=5'

REF
C-1
C-3

NOTES

1. ELEVATIONS AND LOCATIONS OF ELECTRICAL DUCT BANKS AND PIPES SHOWN SHADED ARE APPROXIMATE ELEVATIONS AND LOCATIONS ONLY.
2. HORIZONTAL COORDINATES ARE INTEC SITE SPECIFIC. VERTICAL DATUM IS NRTS (0.35' HIGHER THAN INTEC VERTICAL DATUM).

REVISION: 0
ORIGINAL SIGNED BY: KURT D. FRITZ
DATE ORIGINAL SIGNED: 9/18/2000
SEAL NUMBER: 9404
ORIGINAL STORED AT: CROB DOCUMENT CONTROL

PROFESSIONAL ENGINEER REGISTERED 9404 STATE OF IDAHO KURT D. FRITZ

FOR DRAWING INDEX SEE DRAWING NO. 515158	SUBCONTRACT NO. S00-588051	INEEL
HORIZONTAL 1"=40' VERTICAL 1"=5'	REGISTER: M.S. KAPREN; DESIGN: KURT FRITZ; DRAWN: ROB HERGESHEIMER; PROJECT NO. 020878; SPEC CODE	INEEL OU 3-13 GROUP 1 TANK FARM INTERIM ACTION PHASE 1 & 2 ALIGNMENT 5 PROFILE
DESIGN PHASE: AFC	FOR REVIEW/APPROVAL SIGNATURES SEE DAR NO. 00386	SIZE D; CADD CODE; INDEX CODE NUMBER AREA 200 TYPE 0100 CL 02 DISC 090; DWG-515174; REV
QUALITY LEVEL: 3	EFFECTIVE DATE: 9/18/2000	SCALE: NOTED; SHEET C-15

File: C-15.DWG ID: ROHS
Path: G:\OU3-13-TANKFARM\9-8-00 Bakkustbrg/OD - 3:45 P.M. Drawn in Model Space

REVISIONS		
REV	DESCRIPTION	EFFECTIVE DATE:

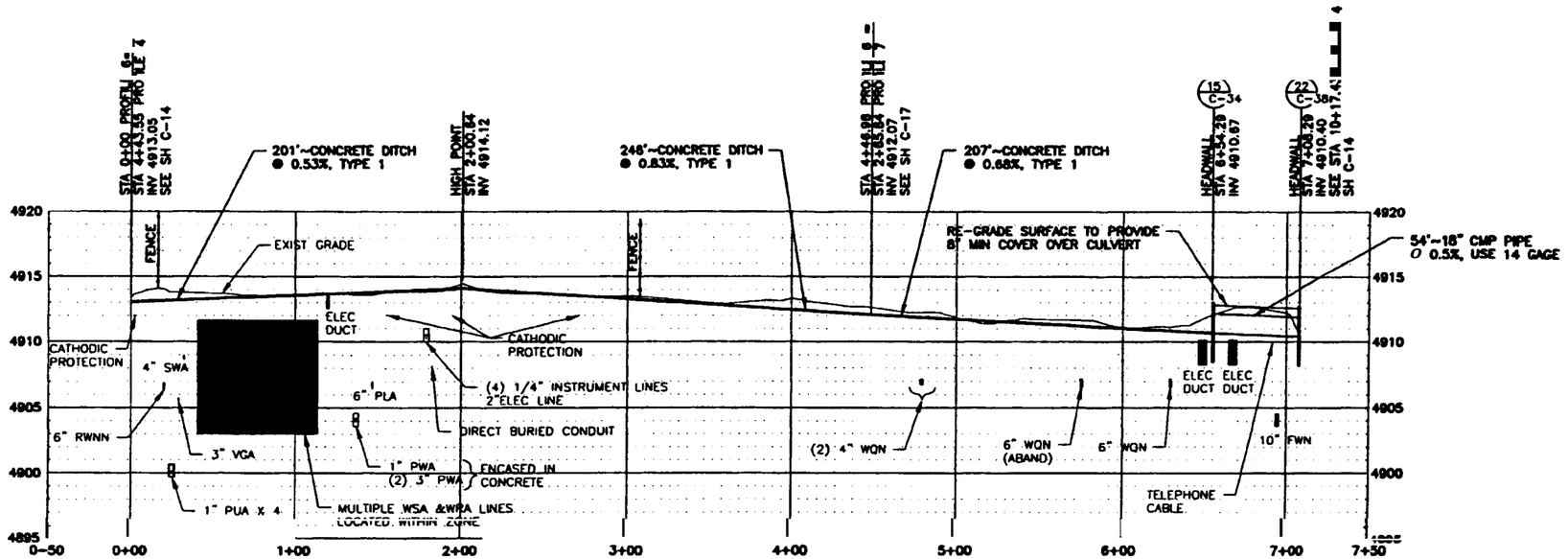

ALIGNMENT 6 PROFILE

SCALE: HOR 1"=40'
VER 1"=5'

REF
C-1
C-8
C-14
C-17

NOTES

1. ELEVATIONS AND LOCATIONS OF ELECTRICAL DUCT BANKS AND PIPES SHOWN SHADED ARE APPROXIMATE ELEVATIONS AND LOCATIONS ONLY.
2. HORIZONTAL COORDINATES ARE INTEC SITE SPECIFIC. VERTICAL DATUM IS NRTS (0.35' HIGHER THAN INTEC VERTICAL DATUM).

REVISION: 0
ORIGINAL SIGNED BY: KURT D. FRITZ
DATE ORIGINAL SIGNED: 9/18/2000
SEAL NUMBER: 9404
ORIGINAL STORED AT: EROB DOCUMENT CONTROL

PROFESSIONAL ENGINEER REGISTERED 9404 STATE OF IDAHO KURT D. FRITZ

FOR DRAWING INDEX SEE DRAWING NO. 515158	SUBCONTRACT NO. S00-588051	INEEL
HORIZONTAL 1"=40' VERTICAL 1"=5'	REQUESTER: M.S. KAPREN DESIGN: KURT FRITZ DRAWN: ROB HERDESHEIMER PROJECT NO. 020078 SPEC CODE	INEEL OU 3-13 GROUP 1 TANK FARM INTERIM ACTION PHASE 1 & 2 ALIGNMENT 6 PROFILE
DESIGN PHASE: AFC	FOR REVIEW/APPROVAL SIGNATURES SEE DAR NO. 88388	SIZE D; CAGE CODE; WBS/CCN/ACTIVITY/SEQ: AMA 209, LVL 0100, CL 02, ORIG 090; DWG- 515175; REV
QUALITY LEVEL: 3	EFFECTIVE DATE: 9/18/2000	SCALE: NOTED; SHEET C-16

Drawn in Model Space
Date/Time: 9/18/00 - 3:46 P.M.
File: C-16.DWG
Path: G:\OU3-13-TANKFARM\9-8-00

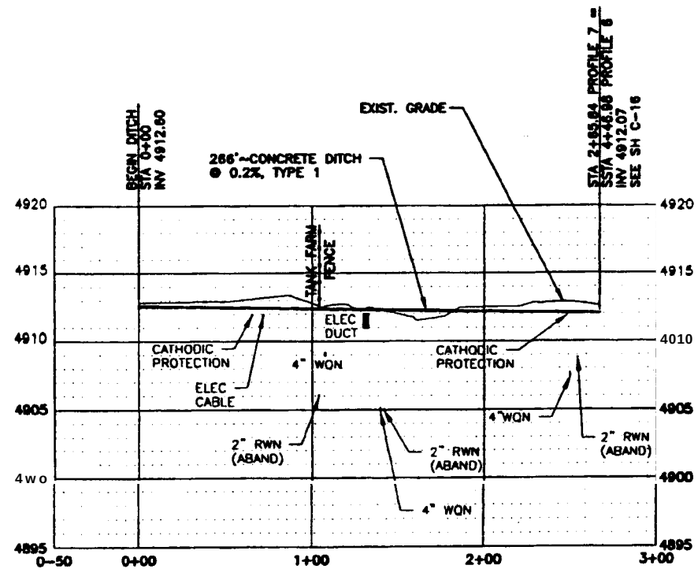

ALIGNMENT 7 PROFILE

SCALE: HOR 1"=40'
VER 1"=5'

REF
C-1
C-3
C-16

NOTES

1. ELEVATIONS AND LOCATIONS OF ELECTRICAL DUCT BANKS AND PIPES SHOWN SHADED ARE APPROXIMATE ELEVATIONS AND LOCATIONS ONLY.
2. HORIZONTAL COORDINATES ARE INTEC SITE SPECIFIC. VERTICAL DATUM IS NRTS (0.35' HIGHER THAN INTEC VERTICAL DATUM).

REVISION: 0
ORIGINAL SIGNED BY: KURT D. FRITZ
DATE ORIGINAL SIGNED: 9/18/2000
SEAL NUMBER: 9404
ORIGINAL STORED AT: DOE DOCUMENT CONTROL

PROFESSIONAL ENGINEER REGISTERED 9404 STATE OF IDAHO KURT D. FRITZ

FOR DRAWING INDEX SEE DRAWING NO. 515158	SUBCONTRACT NO. S00-588051	INEEL
HORIZONTAL 1"=40' VERTICAL 1"=5'	REQUESTER: M.S. KAPREN DESIGN: KURT FRITZ DRAWN: ROB HERDESHEIMER PROJECT NO. 020978 SPEC CODE	INEEL OU 3-13 GROUP 1 TANK FARM INTERIM ACTION PHASE 1 & 2 ALIGNMENT 7 PROFILE
DESIGN PHASE: AFC	FOR REVIEW/APPROVAL SIGNATURES SEE DAS NO. 88366	SIZE D; CADD CODE; INDEX CODE NUMBER AREA TYPE A DISC 200 0100 02 080; DWG- 515176; REV
QUALITY LEVEL: 3	EFFECTIVE DATE: 9/18/2000	SCALE: NOTED; SHEET C-17

REVISIONS

REV	DESCRIPTION	EFFECTIVE DATE

File: C-17.DWG ID: 80145 Drawn in Model Space
Path: G:\OU3-13-TANKFARM\B-e-80 Defaults\MS/20 = 3148 #

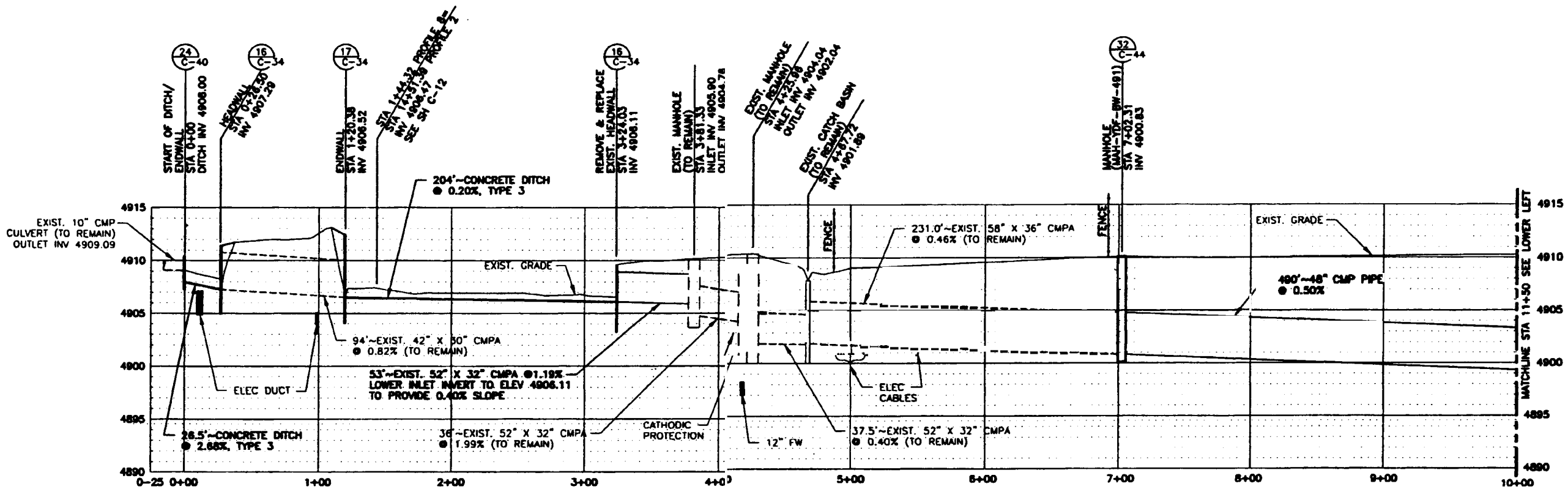

ALIGNMENT 8 PROFILE

SCALE: HOR 1"=40'
VER 1"=5'

REF
C-1
C-9
C-10
C-12

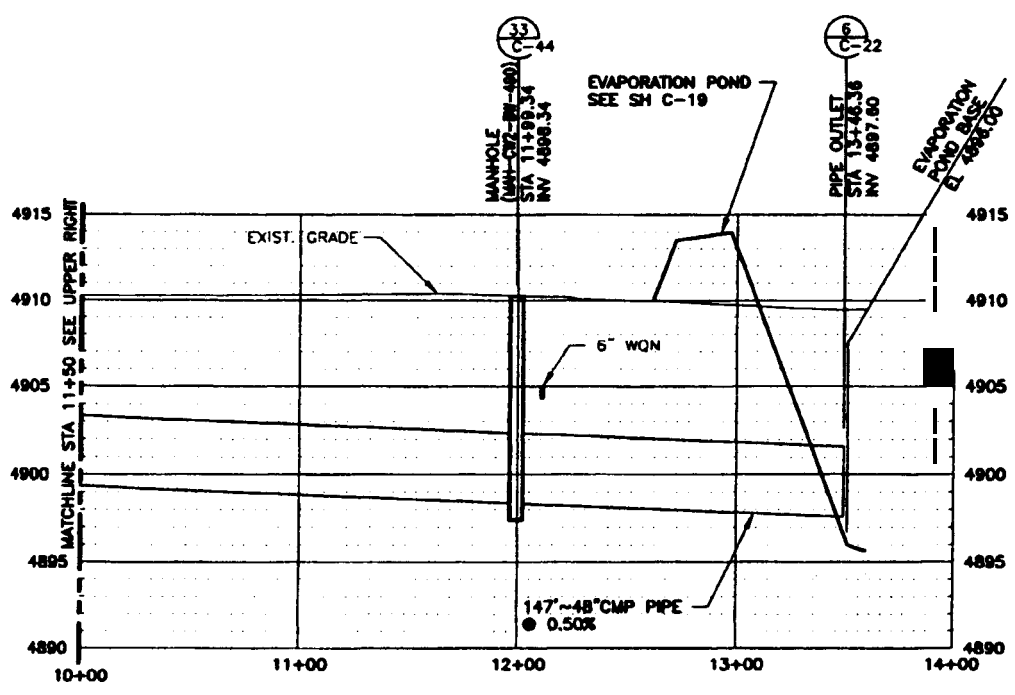

NOTES

1. ELEVATIONS AND LOCATIONS OF ELECTRICAL DUCT BANKS AND PIPES SHOWN SHADED ARE APPROXIMATE ELEVATIONS AND LOCATIONS ONLY.
2. HORIZONTAL COORDINATES ARE INTEC SITE SPECIFIC. VERTICAL DATUM IS NRTS (0.35' HIGHER THAN INTEC VERTICAL DATUM).

REVISION: 0
ORIGINAL SIGNED BY: KURT D. FRITZ
DATE ORIGINAL SIGNED: 9/18/2000
SEAL NUMBER: 9404
ORIGINAL STORED AT: EROB DOCUMENT CONTROL

PROFESSIONAL ENGINEER REGISTERED 9404 STATE OF IDAHO KURT D. FRITZ

FOR DRAWING INDEX SEE DRAWING NO. 515158	SUBCONTRACT NO. S00-588051
HORIZONTAL 1"=40' VERTICAL 1"=5'	REDACTOR: M.S. KAPTEIN; DESIGN: KURT FRITZ; DRAWN: ROB NORGESHEIMER; PROJECT NO. 020078; SPEC CODE
DESIGN PHASE: AFC	FOR REVIEW/APPROVAL SIGNATURES SEE DAR NO. 00386
QUALITY LEVEL: 3	EFFECTIVE DATE: 9/18/2000

INEEL
BECHTEL BWXT IDAHO, LLC

INEEL
OU 3-13 GROUP 1
TANK FARM INTERIM ACTION
PHASE 1 & 2
ALIGNMENT 8 PROFILE

SIZE D | CADD CODE | WORK CODE NUMBER AREA 200 TYPE 01 CL 00 CODE 080 | DWG-515177 | REV | SHEET C-18

SCALE: NOTED

File: 18.DWG Path: \OU3-13-TANKFARM\9-8-00 ID: ROHS Drawn in Model Space Date:09/08/00 - 3:50 P.M.

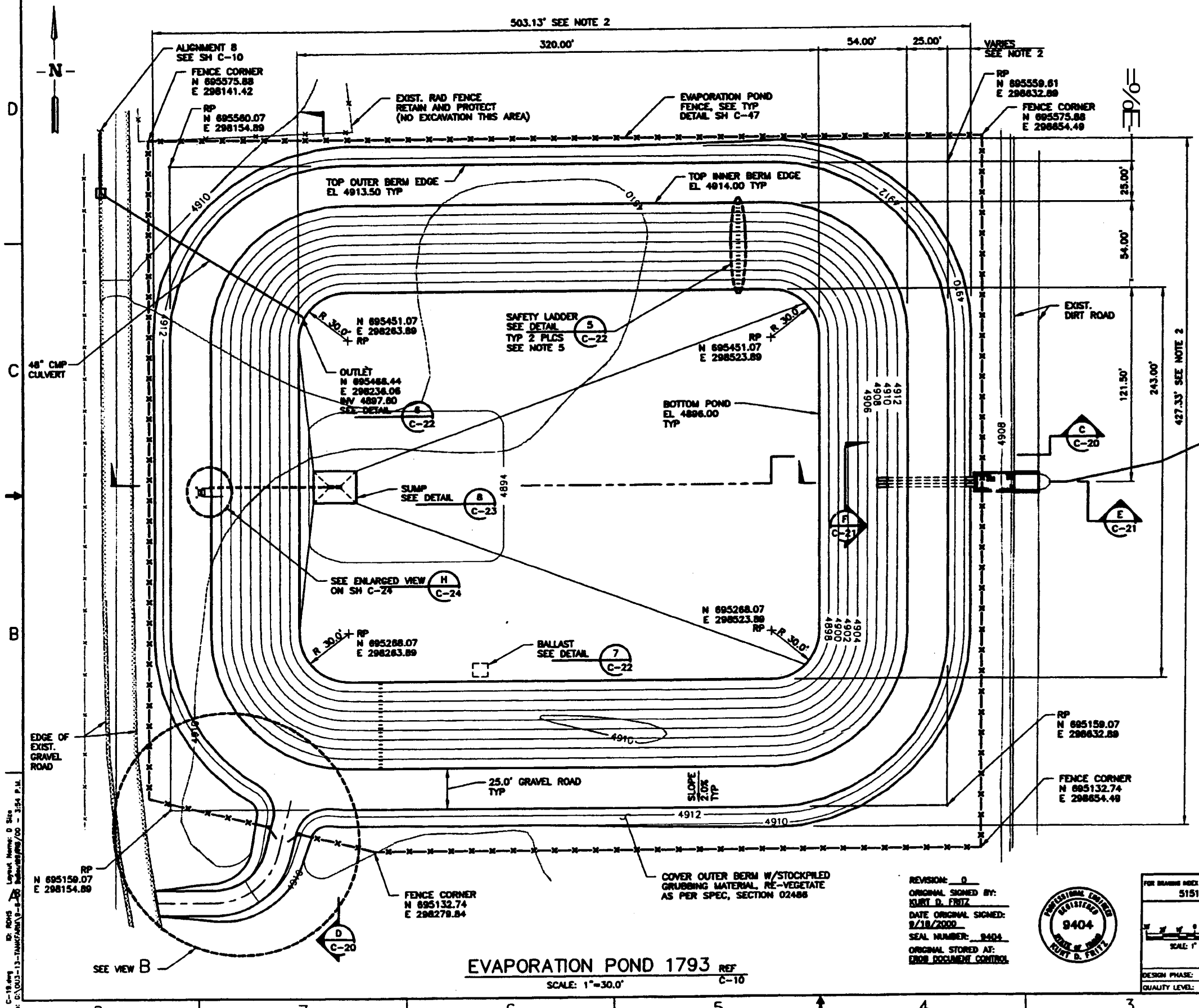

EVAPORATION POND 1793 REF C-10

SCALE: 1"=30.0'

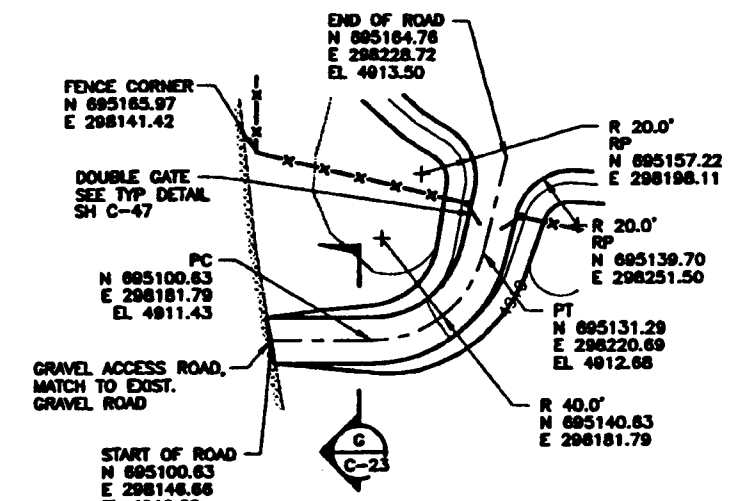

VIEW B

SCALE: 1"=30.0'

X-REFERENCE

515220

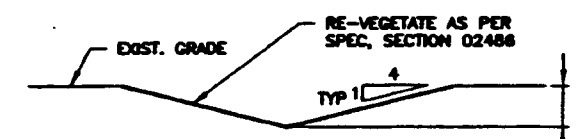

TYP "V" DITCH DETAIL REF C-21

NTS

ESTIMATED EARTHWORK QUANTITIES

CLEAR AND GRUBBING 5 ACRES
EXCAVATION (NO EXPANSION) 57,000 CY
GENERAL FILL 11,000 CY
DRAINAGE DITCHES 400 LF

NOTES

1. HORIZONTAL COORDINATES ARE INTEC SITE SPECIFIC. VERTICAL DATUM IS NRTS (0.35' HIGHER THAN INTEC VERTICAL DATUM).
2. OUTER BERM DIMENSIONS WILL VARY DUE TO CHANGES IN TERRAIN ELEVATIONS.
3. CONTOURS ARE ON 2.0' INTERVALS.
4. ESTIMATED QUANTITIES PERTAIN TO WORK THIS SHEET ONLY.
5. SAFETY LADDERS SHALL BE LOCATED APPROXIMATELY AS SHOWN.

REVISION: 0
ORIGINAL SIGNED BY: KURT D. FRITZ
DATE ORIGINAL SIGNED: 9/18/2000
SEAL NUMBER: 9404
ORIGINAL STORED AT: CROW DOCUMENT CONTROL

PROFESSIONAL ENGINEER REGISTERED 9404 STATE OF IDAHO KURT D. FRITZ

FOR DRAWING INDEX SEE DRAWING NO.	515158
SUBCONTRACT NO.	S00-588051
SUBMITTED BY:	M.S. KAPREN
DESIGN:	KURT FRITZ
DRAWN:	ROD HERGESHEIMER
PROJECT NO.	020878
SPEC CODE	
FOR REVIEW/APPROVAL SIGNATURES SEE DWG NO.	68386
EFFECTIVE DATE:	9/18/2000
DESIGN PHASE:	AFC
QUALITY LEVEL:	3

SCALE: 1" = 30.0'

INEEL

INEEL
OU 3-13 GROUP 1
TANK FARM INTERIM ACTION
PHASE 1 & 2
EVAPORATION POND 1793

SIZE	CAGE CODE	DWG CODE NUMBER					DWG-515178	REV
		AKA	TYP	L.G.	ORG			
D		200	1793	02	080			

SCALE: 1"=30.0' SHEET C-19

REVISIONS

REV	DESCRIPTION	EFFECTIVE DATE

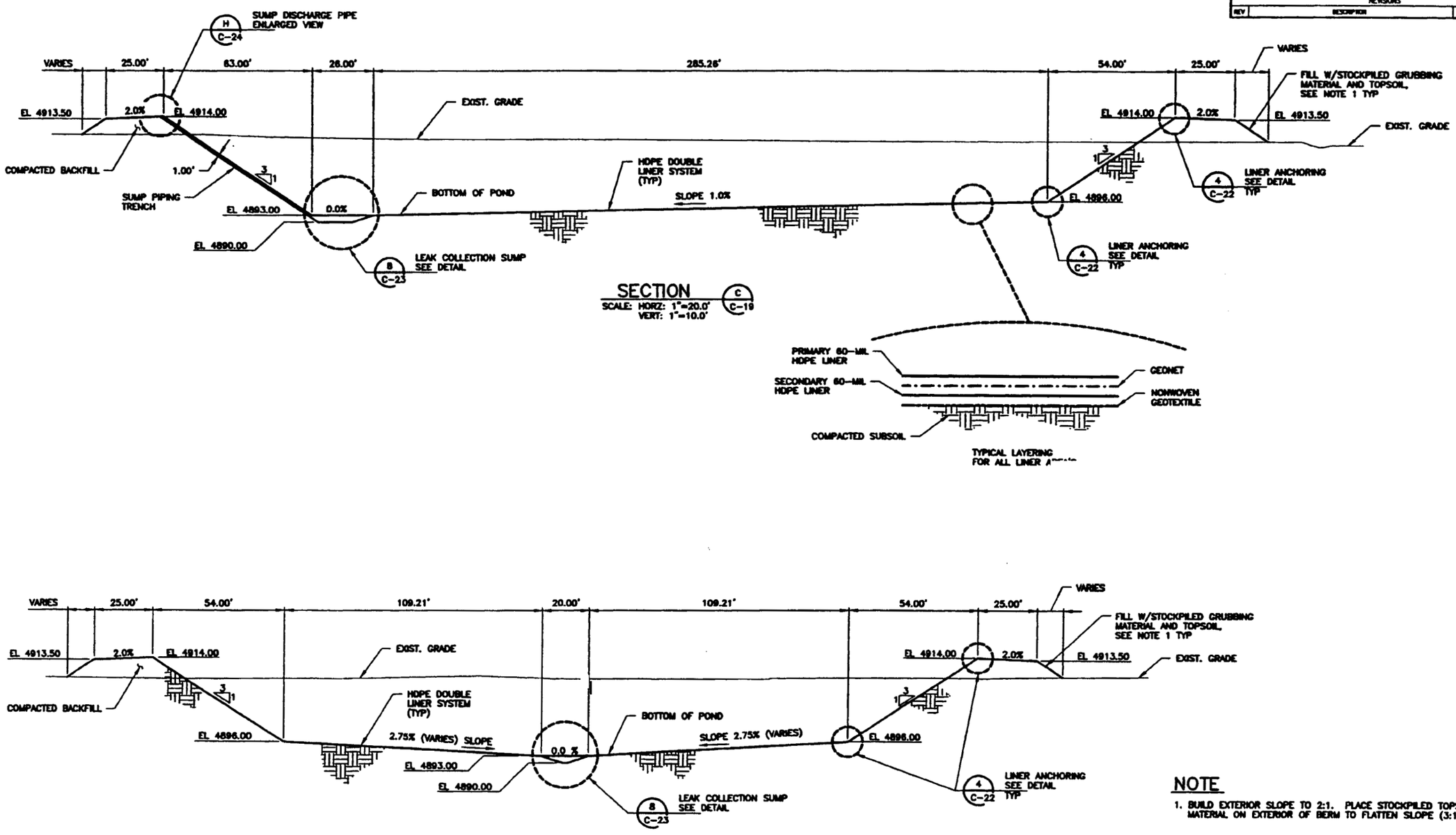

NOTE

1. BUILD EXTERIOR SLOPE TO 2:1. PLACE STOCKPILED TOPSOIL MATERIAL ON EXTERIOR OF BERM TO FLATTEN SLOPE (3:1 MIN).

REVISION: 0
ORIGINAL SIGNED BY: KURT D. FRITZ
DATE ORIGINAL SIGNED: 9/18/2000
SEAL NUMBER: 9404
ORIGINAL STORED AT: CRDB DOCUMENT CONTROL

PROFESSIONAL ENGINEER REGISTERED 9404 STATE OF IDAHO KURT D. FRITZ

FOR DRAWING INDEX SEE DRAWING NO.	515158
NOTED	
DESIGN PHASE:	AFC
QUALITY LEVEL:	3
SUBCONTRACT NO.	S00-588051
REDACTOR:	M.S. KAPTEIN
DESIGN:	KURT FRITZ
DRAWN:	ROB HENGESHEIMER
PROJECT NO.	020878
SPEC CODE	
FOR REVIEW/APPROVAL SIGNATURES SEE DAR NO.	68388
EFFECTIVE DATE:	9/18/2000

INEEL
INEEL
OU 3-13 GROUP 1
TANK FARM INTERIM ACTION
PHASE 1 & 2
EVAPORATION POND SECTIONS

SIZE	CADD CODE	INDEX CODE NUMBER				DWG-	REV
		AREA	TYPE	A	CODE		
D	01MF3	200	17793	02	080	515179	

SCALE: NOTED
SHEET C-20

REVISIONS

REV	DESCRIPTION	EFFECTIVE DATE:

REVISIONS		
REV	DESCRIPTION	EFFECTIVE DATE

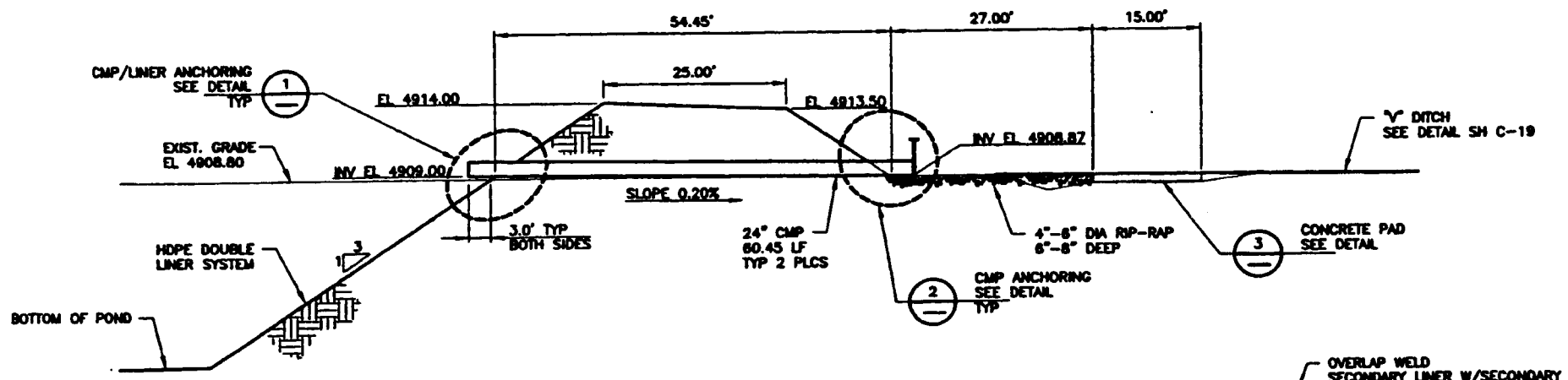

SECTION (E / C-19)
SCALE: HORZ: 1"=10.0' VERT: 1"=5.0'

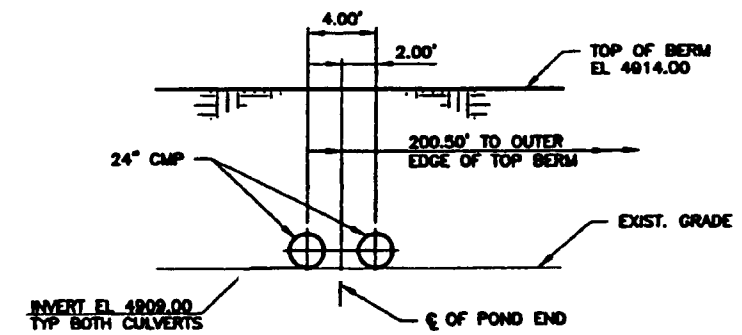

SECTION (F / C-19)
SCALE: HORZ: 1"=5.0' VERT: 1"=2.5'

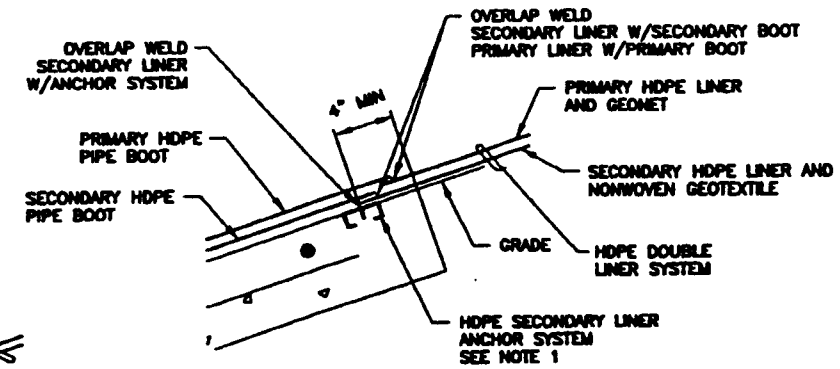

ENLARGED VIEW
NTS
SEE NOTE 2

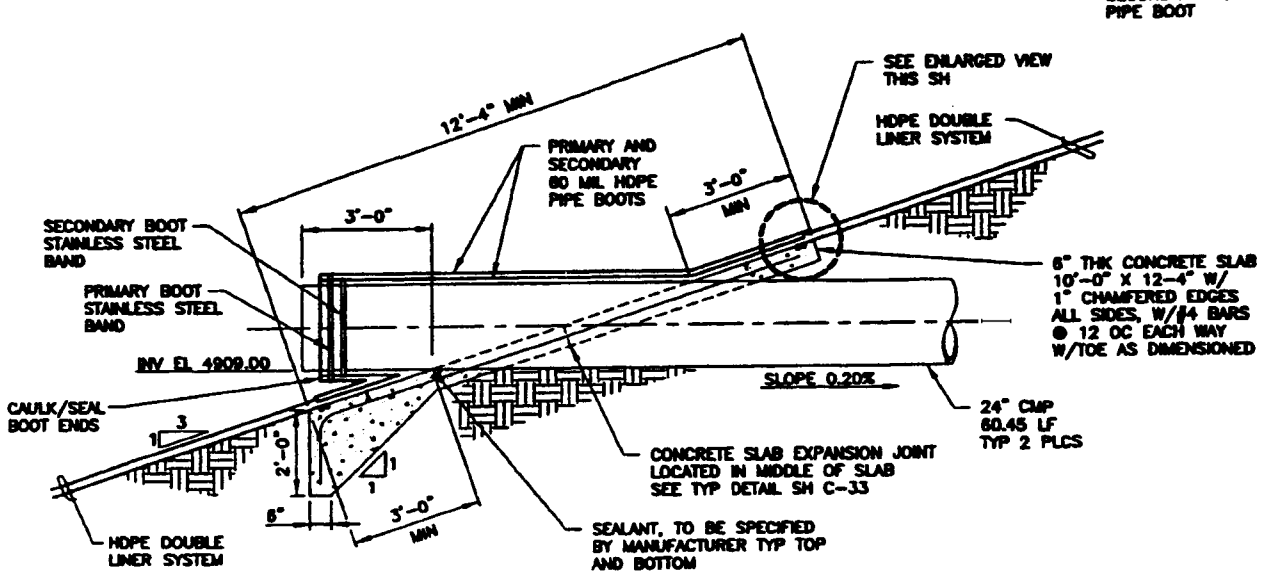

DETAIL (1)
SCALE: 1"=2'-0"

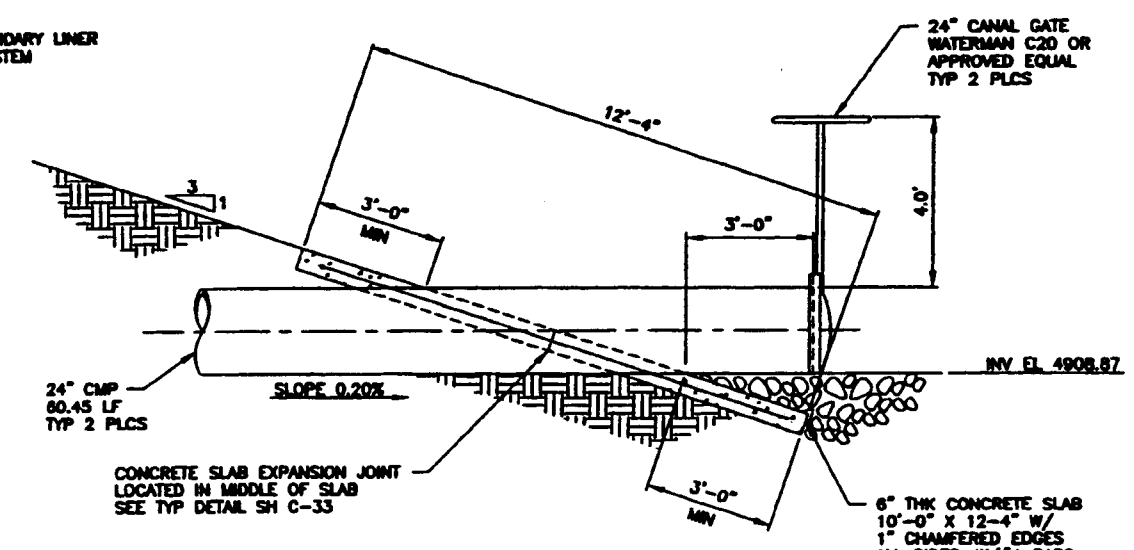

DETAIL (2)
SCALE: 1"=2'-0"

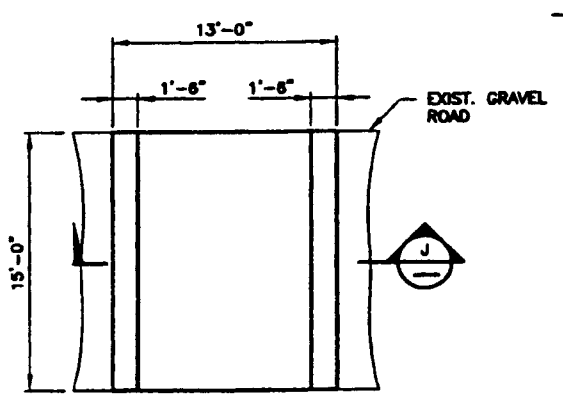

DETAIL (3)
1"=5'-0"

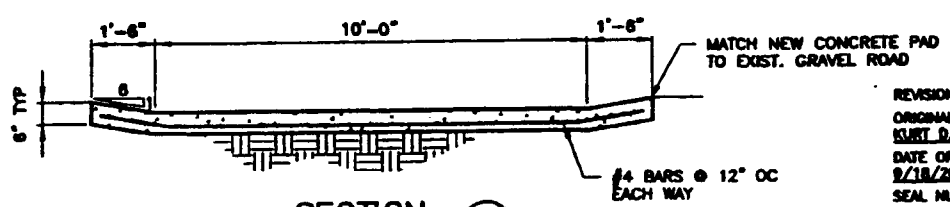

SECTION (J)
1"=2'-0"

NOTES

1. FASTEN SECONDARY LINER TO CONCRETE USING MANUFACTURERS SPECIFIED ANCHORING SYSTEM OF HDPE ANCHORS OR BATTEN STRIPS.
2. INFORMATION CALLED OUT IN ENLARGED VIEW IS TYP OF ANCHORING AND OVERLAP WELDING ON ALL SIDES OF PIPE BOOT.

REVISION: 0
ORIGINAL SIGNED BY: KURT D. FRITZ
DATE ORIGINAL SIGNED: 9/18/2000
SEAL NUMBER: 9404
ORIGINAL STORED AT: CRDB DOCUMENT CONTROL

PROFESSIONAL ENGINEER REGISTERED 9404 STATE OF IDAHO KURT D. FRITZ

FOR DRAWING INDEX SEE DRAWING NO. 515156	SUBCONTRACT NO. S00-588051
SCALE 1" = 1'-6"	DESIGNATED: M.S. KAPTEIN
	DESIGN: KURT FRITZ
	DRAWN: ROB HERGESHEIMER
	PROJECT NO. 020878
	SPEC CODE
DESIGN PHASE: AFC	FOR REVIEW/APPROVAL SIGNATURES SEE DAR NO. 68388
QUALITY LEVEL: 3	EFFECTIVE DATE: 9/18/2000

INEEL
INEEL
OU 3-13 GROUP1
TANK FARM INTERIM ACTION
PHASE 1 & 2
EVAPORATION POND SECTIONS AND DETAILS

SIZE	CAGE CODE	INDEX CODE NUMBER				DWG.	REV
		AREA	SYS	A	SEQ		
D		200	1783	02	080	515180	

SCALE: NOTED SHEET C-21

REVISIONS		
REV	DESCRIPTION	EFFECTIVE DATE:

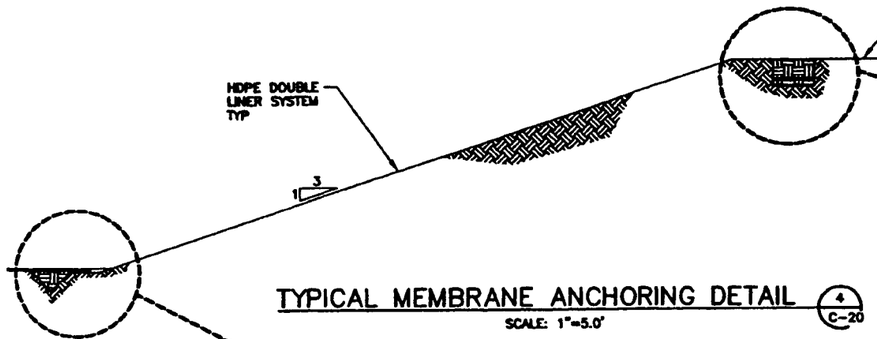

TYPICAL MEMBRANE ANCHORING DETAIL (4 / C-20)

SCALE: 1"=5.0'

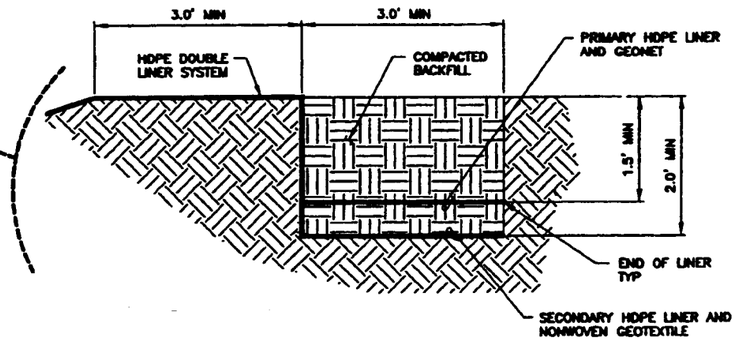

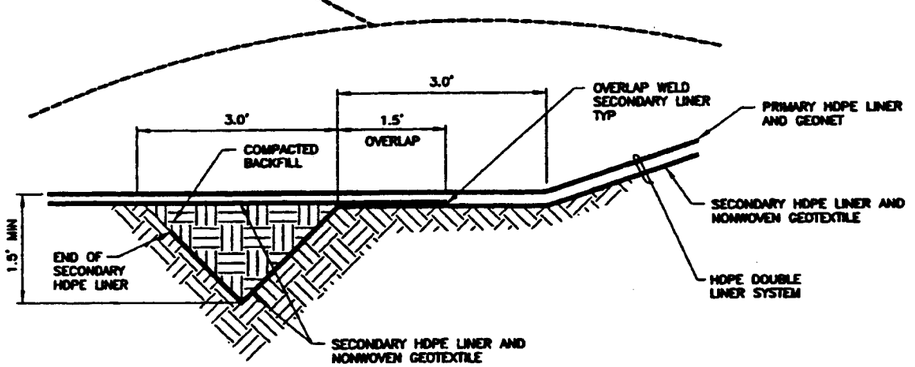

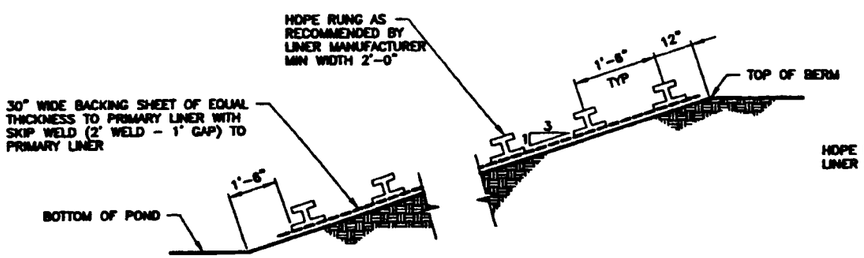

TYP SAFETY LADDER DETAIL (5 / C-19)

NTS

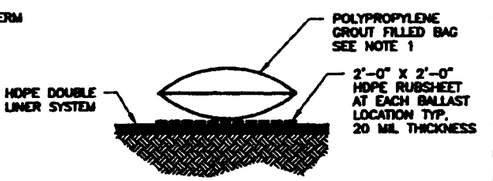

TYPICAL BALLAST DETAIL (7 / C-19)

NTS

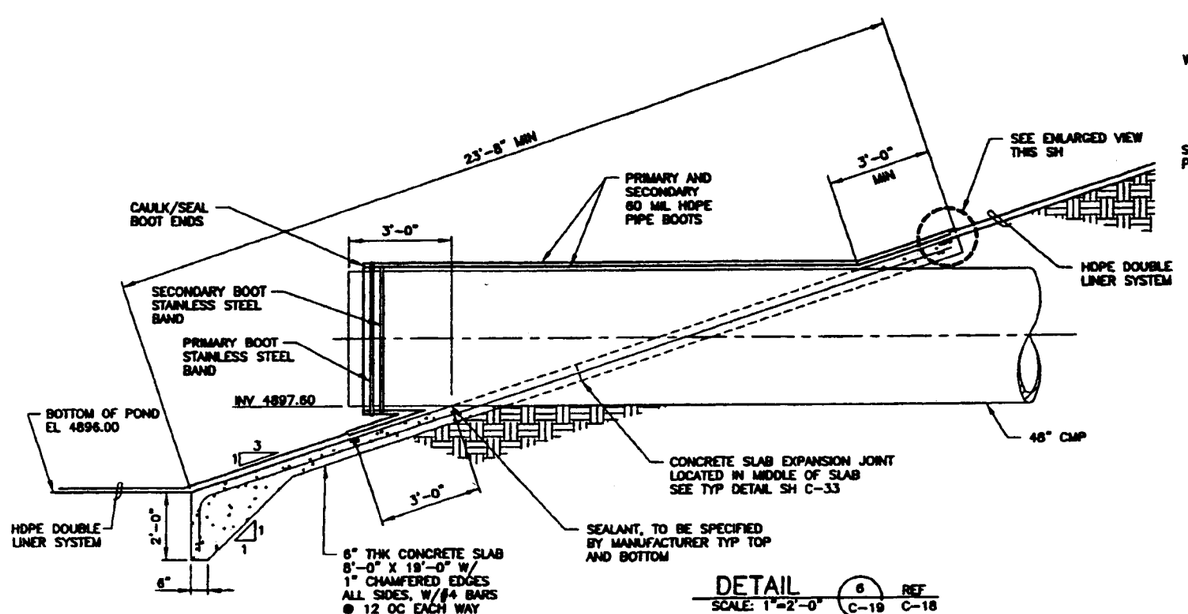

DETAIL (6 / C-19 REF C-18)

SCALE: 1"=2'-0"

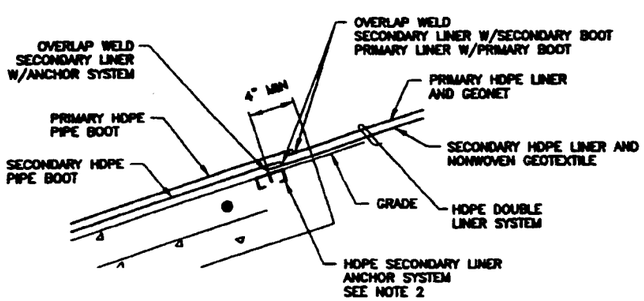

ENLARGED VIEW

NTS
SEE NOTE 3

NOTE

1. PLACE BALLAST ON GRID INTERVALS ACROSS SLOPE AND BASE OF POND, UNDER DIRECTION OF THE LINER MANUFACTURER.
2. FASTEN SECONDARY LINER TO CONCRETE USING MANUFACTURERS SPECIFIED ANCHORING SYSTEM OF HDPE ANCHORS OR BATTEN STRIPS.
3. INFORMATION CALLED OUT IN ENLARGED VIEW IS TYP OF ANCHORING AND OVERLAP WELDING ON ALL SIDES OF PIPE BOOT.

REVISION: 0
ORIGINAL SIGNED BY: KURT D. FRITZ
DATE ORIGINAL SIGNED: 9/18/2000
SEAL NUMBER: 9404
ORIGINAL STORED AT: EDMS DOCUMENT CONTROL

PROFESSIONAL ENGINEER REGISTERED 9404 STATE OF IDAHO KURT D. FRITZ

FOR DRAWING INDEX SEE DRAWING NO. 515156	SUBCONTRACT NO. S00-588051	INEEL
NOTED	REQUESTED: M.S. KAPTEIN DESIGN: KURT FRITZ DRAWN: ROD HERGESHEIMER PROJECT NO. 020078 SPEC CODE	INEEL OU 3-13 GROUP1 TANK FARM INTERIM ACTION PHASE 1 & 2 EVAPORATION POND DETAILS
DESIGN PHASE: AFC	FOR REVIEW/APPROVAL SIGNATURES SEE DWG NO. 68386	SIZE D; CAGE CODE; AREA 200, SYS 17933, UNIT 02, SUBUNIT 080; DWG-515181; REV
QUALITY LEVEL: 3	EFFECTIVE DATE: 9/18/2000	SCALE: NOTED; SHEET C-22

File: C-22-REV.dwg ID: RDHS Layout Name: D Size
Path: D:\OU3-13-TANKFARM\B-4-00 Indexed/Rel/00 - 4:05 P.M.

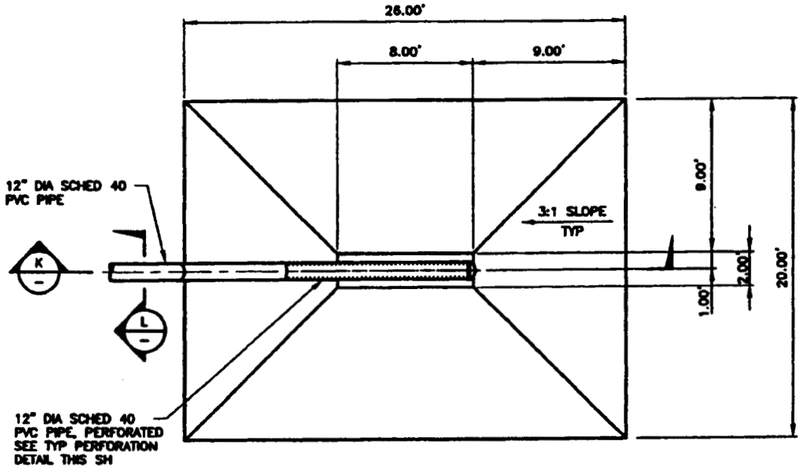

DETAIL (8 / C-19) REF C-20
SCALE: 1"=4.0'

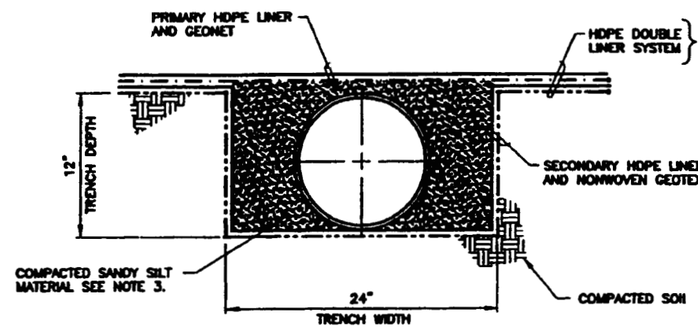

SECTION (L)
SCALE: 2/1

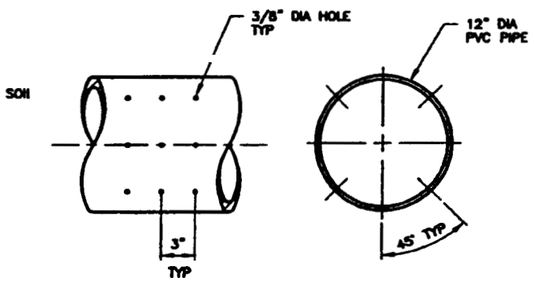

TYP PIPE PERFORATION DETAIL
SCALE: 2/1

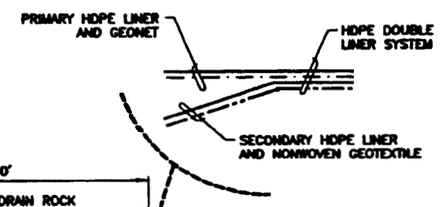

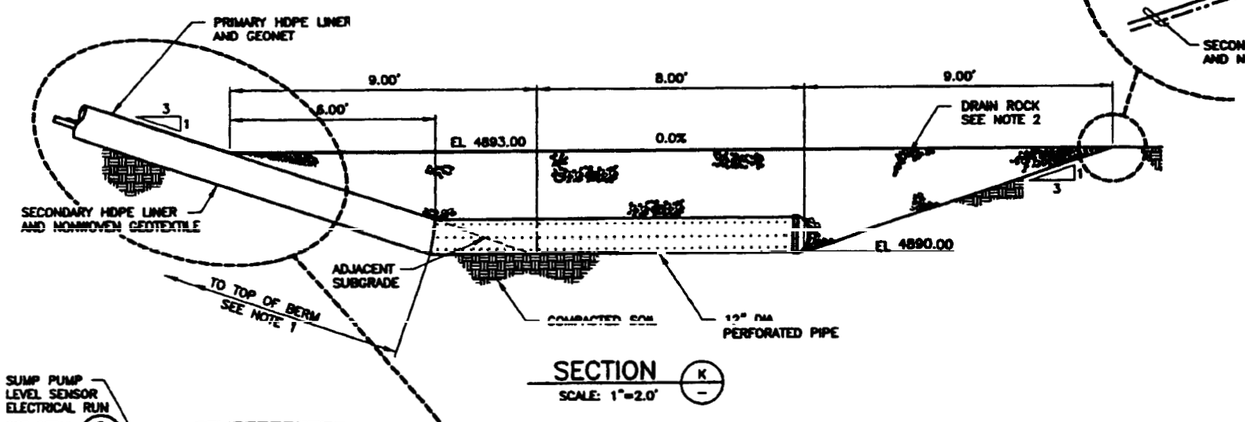

SECTION (K)
SCALE: 1"=2.0'

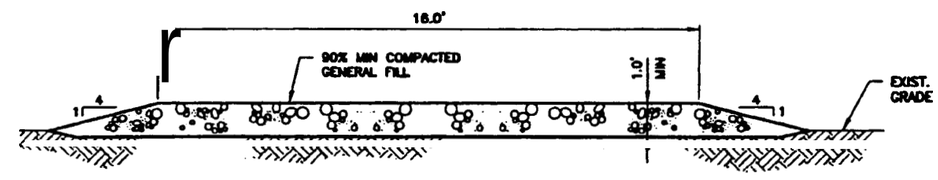

TYPICAL SECTION FOR NEW ACCESS ROAD (G / C-19)
SCALE: 1"=2.0'

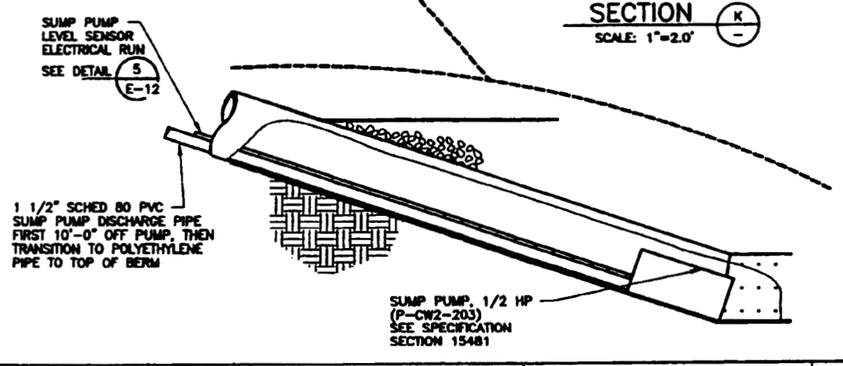

NOTES

1. NONWOVEN GEOTEXTILE SHALL BE PLACED AROUND THE PIPE AT THE POINT OF INTERFACE BETWEEN THE BACKFILL AND THE DRAIN ROCK TO ELIMINATE FINES FROM FILLING IN THE VOIDS IN THE DRAIN ROCK.
2. DRAIN ROCK SHALL BE 3/4" TO 1/2" WELL ROUND, WASHED GRAVEL.
3. SANDY SILT MATERIAL SHALL BE OF SOIL CLASSIFICATION GROUP SM WITH NO GRAVEL GREATER THAN 1" DIA. THIS MATERIAL MAY BE OBTAINED FROM THE TRA PIT OVERBURDEN OR OTHER APPROVED SOURCE.

REVISION: 0
ORIGINAL SIGNED BY: KURT D. FRITZ
DATE ORIGINAL SIGNED: 9/18/2000
SEAL NUMBER: 9404
ORIGINAL STORED AT: FROM DOCUMENT CONTROL

PROFESSIONAL ENGINEER REGISTERED 9404 STATE OF IDAHO KURT D. FRITZ

FOR DRAWING INDEX SEE DRAWING NO.	515156
SUBCONTRACT NO.	S00-588051
DESIGNED: M.S. KAPTEIN	
DESIGN: JESSIN HURST	
DRAWN: ROB HERCHENHEIMER	
PROJECT NO.	020878
SPEC CODE	
PER REVIEW/APPROVAL SIGNATURES SEE DAR NO. 00386	
EFFECTIVE DATE:	9/18/2000
SCALE 1" = 4.0'	
SCALE 1" = 2.0'	
DESIGN PHASE:	AFC
QUALITY LEVEL:	3

INEEL
INEEL
OU 3-13 GROUP 1
TANK FARM INTERIM ACTION
PHASE 1 & 2
EVAPORATION POND SECTIONS AND DETAILS

SIZE	CAGE CODE	AREA	SYSTEM	CLASS	SEQ	DWG-	REV
D	01MF3	200	1793	02	090	515182	

SCALE: NOTED
SHEET C-23

REVISIONS

REV	DESCRIPTION	EFFECTIVE DATE

File: C-23.dwg
Path: G:\OU3-13-TANKFARM\B-8-8\
ID: RDH5 Layout Name: D Size
Rob Hercheimer/00 - 4:13 P.M.

REVISIONS		
REV	DESCRIPTION	EFFECTIVE DATE

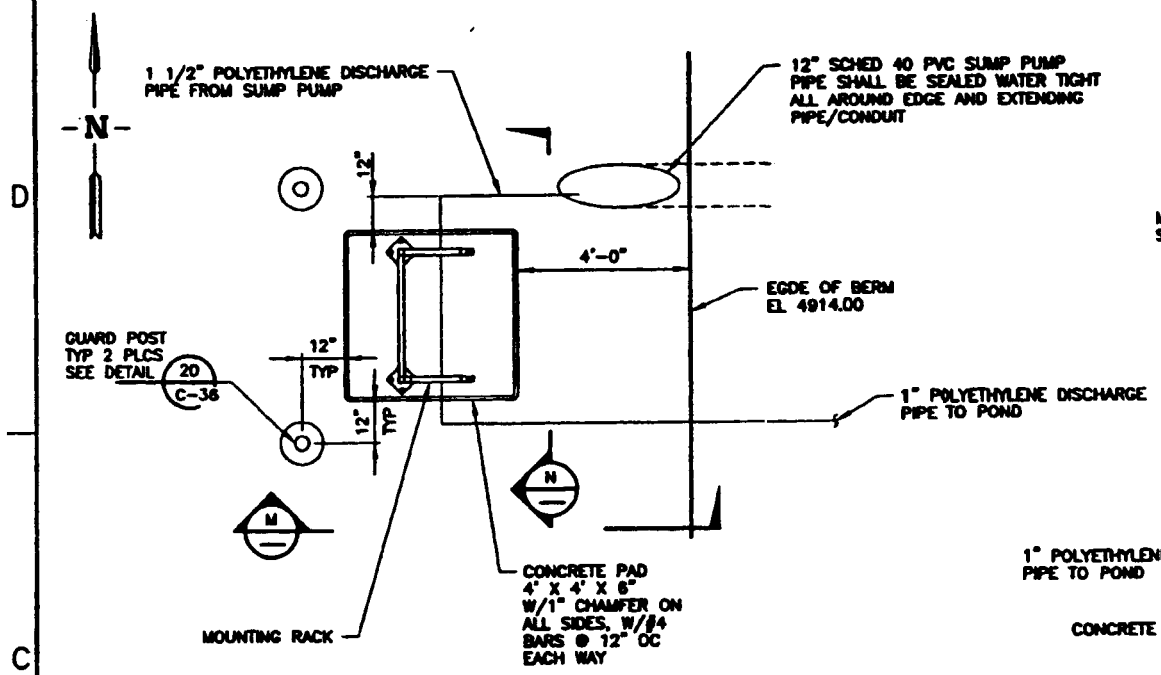

ENLARGED VIEW H C-19 REF C-20
SCALE: 1"=2'-0"
(ELECTRICAL COMPONENTS OMITTED FOR CLARITY)

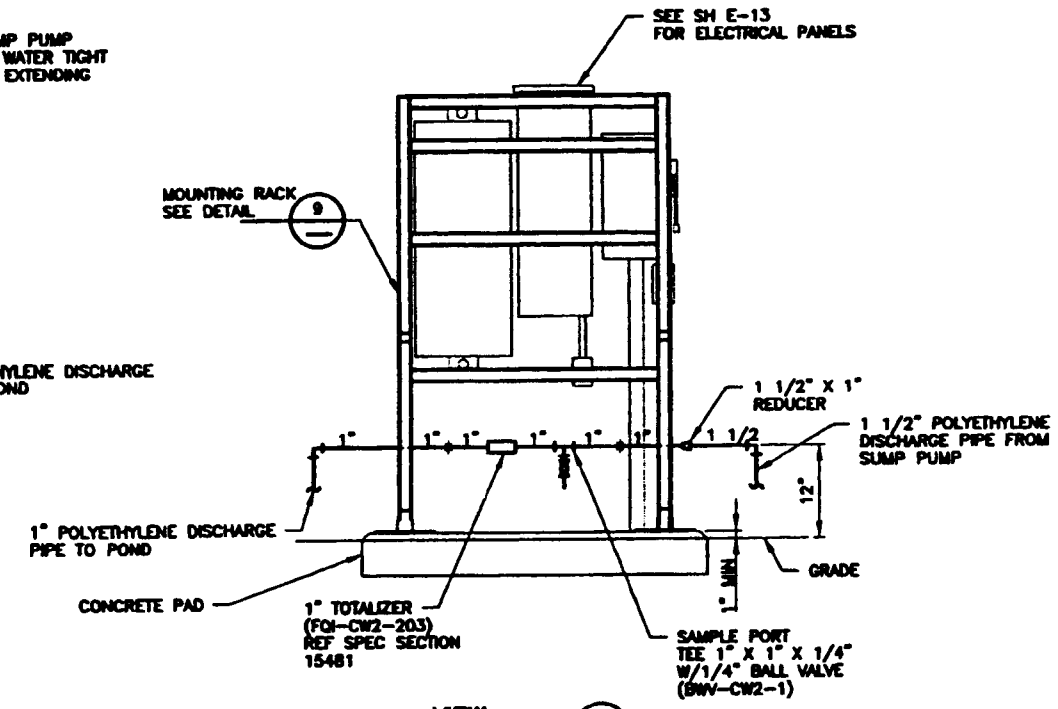

VIEW N
SCALE: 1"=1'-0"
SEE NOTE 2

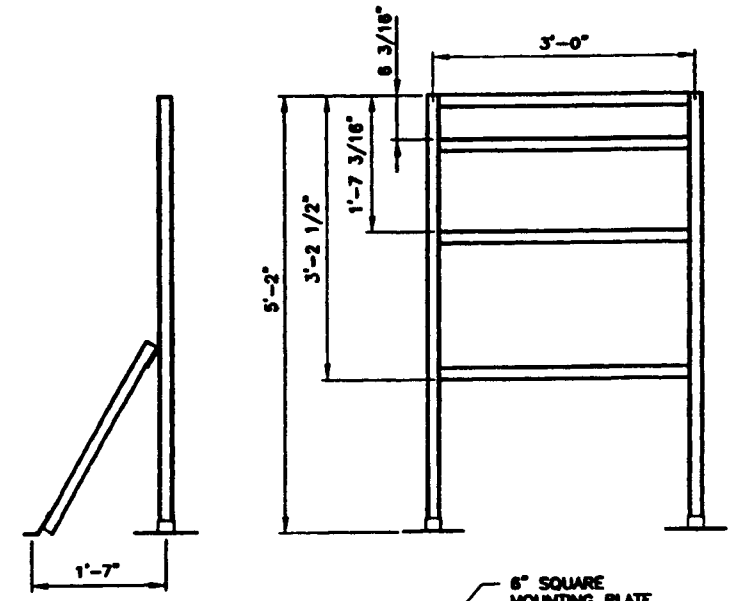

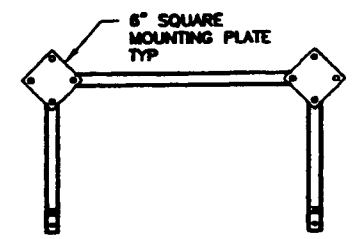

DETAIL 9
SCALE: 1"=1'-0"
SEE NOTE 1

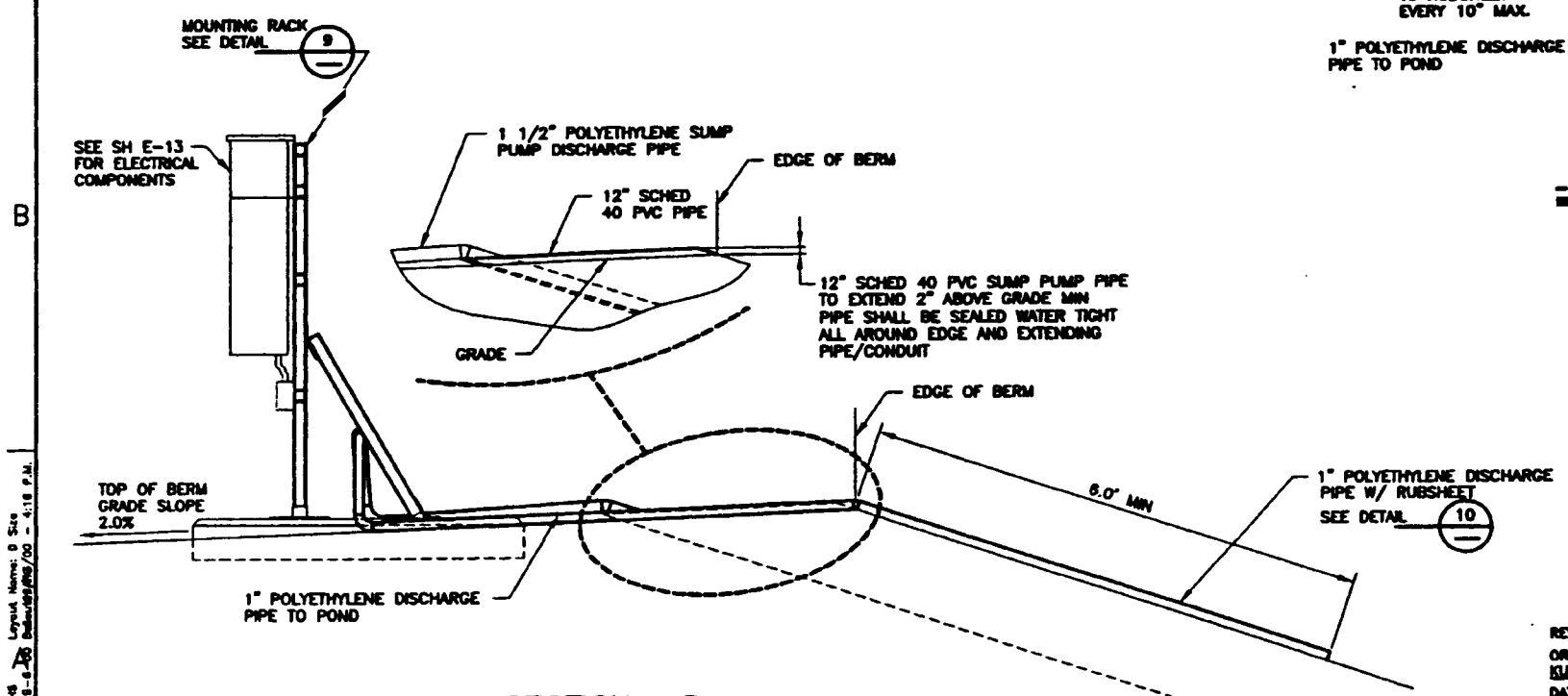

SECTION M
SCALE: 1"=1-0"

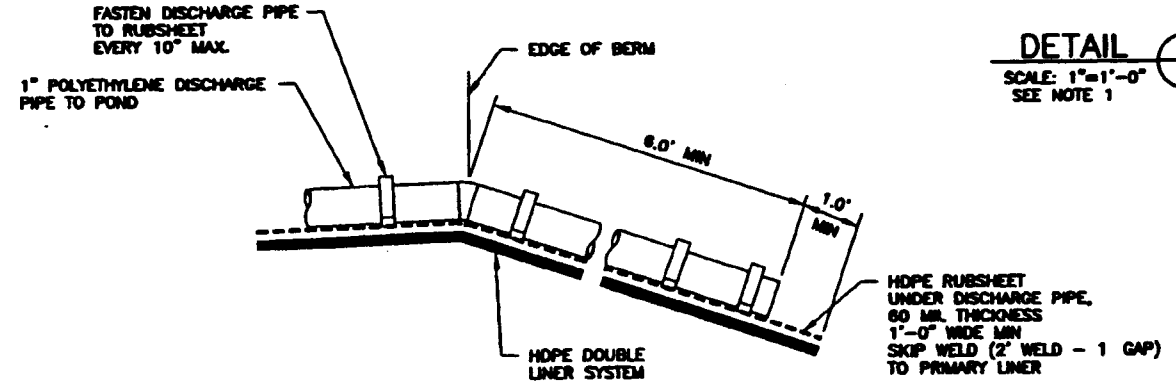

DETAIL 10
NTS

NOTES

1. SUPPORT RACK DETAIL SHOWN IS A PROPOSED CONFIGURATION. RACK SHALL BE CONSTRUCTED USING UNISTRUT P-1000 SERIES OR APPROVED EQUAL MATERIAL. DIMENSIONS SHOWN ARE REFERENCE ONLY AND SHALL BE VERIFIED TO ENSURE PROPER SPACING FOR MOUNTING OF ALL ELECTRICAL/PIPING COMPONENTS.
2. ALL PIPING SHALL BE MOUNTED AND SUPPORTED PER SPECIFICATION.

REVISION: 0
ORIGINAL SIGNED BY: KURT D. FRITZ
DATE ORIGINAL SIGNED: 9/18/2000
SEAL NUMBER: 9404
ORIGINAL STORED AT: ERDB DOCUMENT CONTROL

PROFESSIONAL ENGINEER REGISTERED 9404 STATE OF IDAHO KURT D. FRITZ

FOR DRAWING INDEX SEE DRAWING NO.	515158
SCALE: 1' = 1'-6"	
SCALE: 1' = 2'-6"	
DESIGN PHASE:	AFC
QUALITY LEVEL:	3
SUBCONTRACT NO.	S00-588051
DESIGNER:	M.S. KAPTEIN
DESIGN:	KURT FRITZ
DRAWN:	ROB HENGESHEMER
PROJECT NO.	020978
SPEC CODE	
FOR REVIEW/APPROVAL SIGNATURES SEE DAR NO.	68086
EFFECTIVE DATE:	9/18/2000

INEEL
LOCKHEED MARTIN IDAHO, LLC

INEEL
OU 3-13 GROUP 1
TANK FARM INTERIM ACTION
PHASE 1 & 2
EVAPORATION POND SECTION, VEIWS AND DETAILS

SIZE	CODE IDENT	DWG CODE IDENTIFIER				DWG-515183	REV
		AREA	TYPE	D	DISC		
D		200	1793	02	090		
SCALE: NOTED						SHEET C-24	

File: C-24.dwg
Path: G:\OU3-13-TANKFARM\18-a.dwg
ID: RDHS
Layout Name: D Size
Date: 09/06/00 - 4:18 P.M.

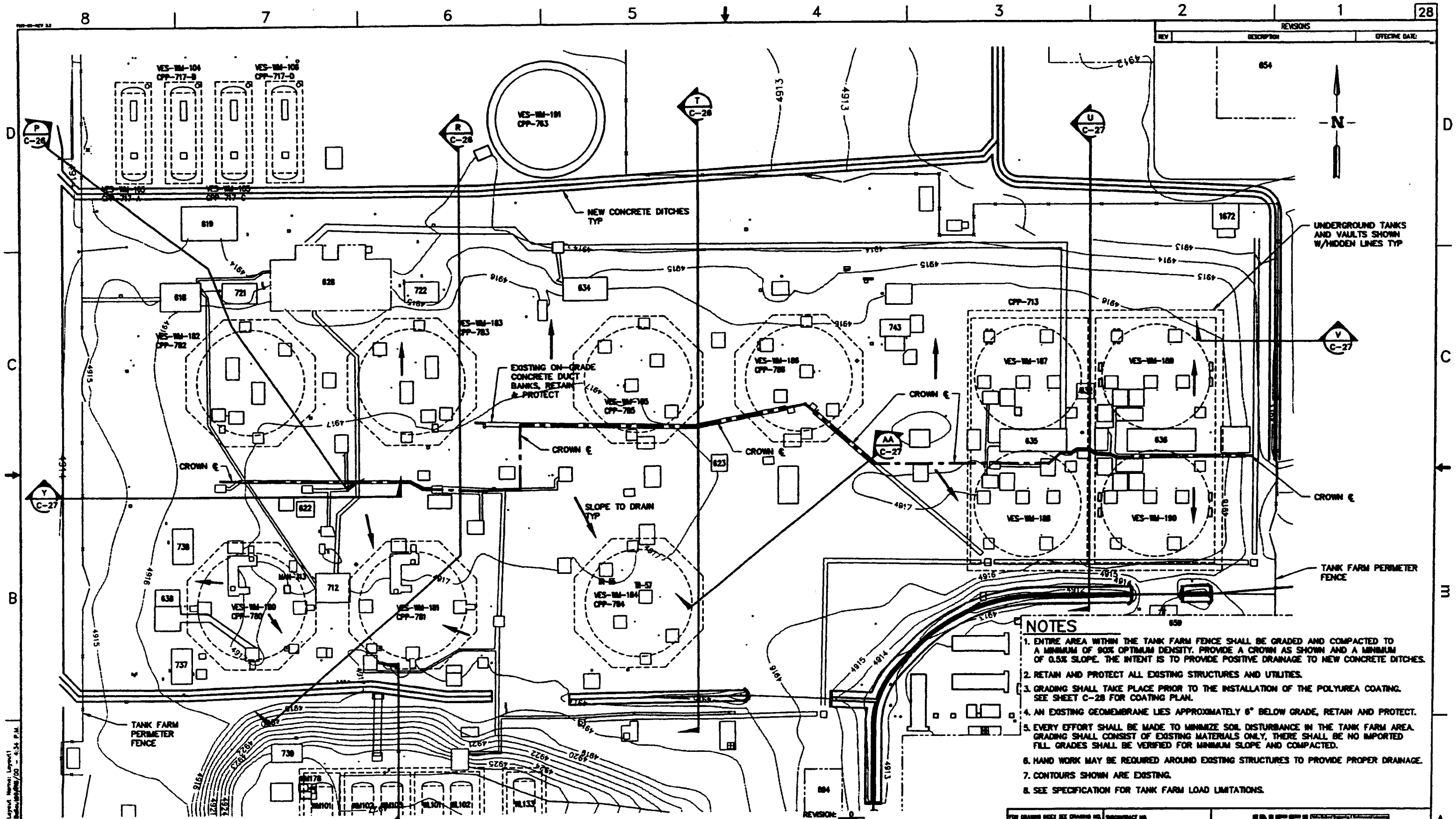

NOTES

1. ENTIRE AREA WITHIN THE TANK FARM FENCE SHALL BE GRADED AND COMPACTED TO A MINIMUM OF 90% OPTIMUM DENSITY. PROVIDE A CROWN AS SHOWN AND A MINIMUM OF 0.5% SLOPE. THE INTENT IS TO PROVIDE POSITIVE DRAINAGE TO NEW CONCRETE DITCHES.
2. RETAIN AND PROTECT ALL EXISTING STRUCTURES AND UTILITIES.
3. GRADING SHALL TAKE PLACE PRIOR TO THE INSTALLATION OF THE POLYUREA COATING. SEE SHEET C-28 FOR COATING PLAN.
4. AN EXISTING GEOMEMBRANE LIES APPROXIMATELY 6" BELOW GRADE, RETAIN AND PROTECT.
5. EVERY EFFORT SHALL BE MADE TO MINIMIZE SOIL DISTURBANCE IN THE TANK FARM AREA. GRADING SHALL CONSIST OF EXISTING MATERIALS ONLY, THERE SHALL BE NO IMPORTED FILL. GRADES SHALL BE VERIFIED FOR MINIMUM SLOPE AND COMPACTED.
6. HAND WORK MAY BE REQUIRED AROUND EXISTING STRUCTURES TO PROVIDE PROPER DRAINAGE.
7. CONTOURS SHOWN ARE EXISTING.
8. SEE SPECIFICATION FOR TANK FARM LOAD LIMITATIONS.

GRADING PLAN

SCALE: 1"=20.0'

REVISION: 0
ORIGINAL SIGNED BY: KURT D. FRITZ
DATE ORIGINAL SIGNED: 9/18/2000
SEAL NUMBER: 9404
ORIGINAL STORED AT: EROB DOCUMENT CONTROL

PROFESSIONAL ENGINEER REGISTERED 9404 STATE OF IDAHO KURT D. FRITZ

REVISIONS		
REV	DESCRIPTION	EFFECTIVE DATE

FOR DRAWING INDEX SEE DRAWING NO.	515158
SUBCONTRACT NO.	S00-588051
DESIGNER: M.S. KAPTEIN	
DRAWN: KURT FRITZ	
CHECKED: ROB HERGESHEIMER	
PROJECT NO.	020878
SPEC CODE	
FOR REVIEW/APPROVAL SIGNATURES SEE DWG NO. 68388	
EFFECTIVE DATE:	9/18/2000
DESIGN PHASE:	AFC
QUALITY LEVEL:	3

INEEL

INEEL
OU 3-13 GROUP 1
TANK FARM INTERIM ACTION
PHASE 1 & 2
TANK FARM GRADING PLAN

SIZE D | CAGE CODE | DWG-515184 | REV
AREA 200 | SYS 0100 | OU 02 | DWG 080
SCALE: 1"=20.0'
SHEET C-25

File: C-25.DWG
Path: C:\OU3-13-TANK\FARM\A-B-25
ID: RDH4
Layout Name: Layout1
Date: 09/18/00 - 4:34 P.M.

REVISIONS		
REV	DESCRIPTION	EFFECTIVE DATE:

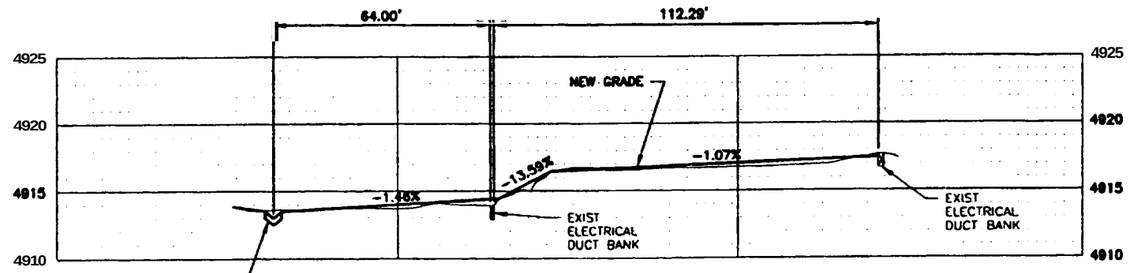

GRADE PROFILE (P / C-25)
SCALE: HOR 1"=20' VER 1"=5'

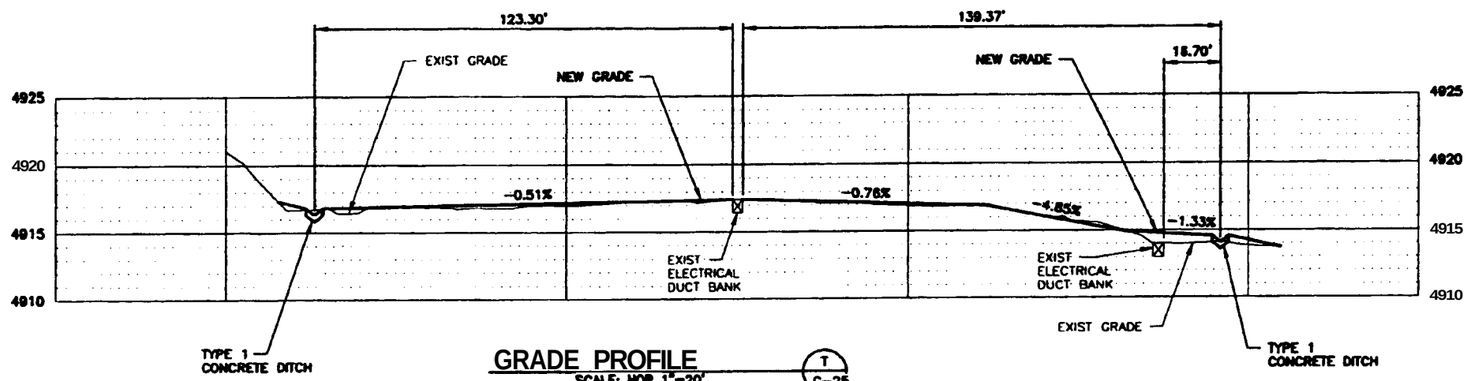

GRADE PROFILE (T / C-25)
SCALE: HOR 1"=20' VER 1"=5'

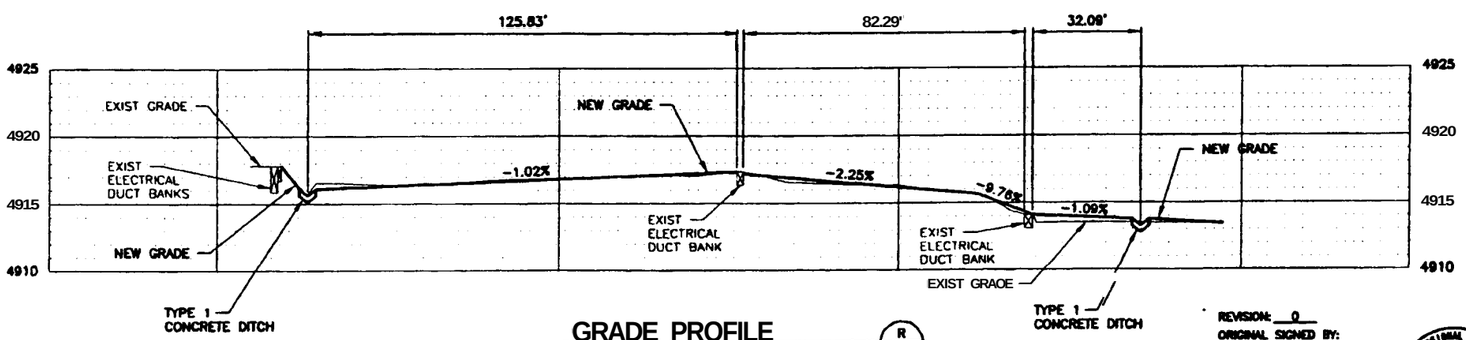

GRADE PROFILE (R / C-25)
SCALE: HOR 1"=20' VER 1"=5'

REVISION: 0
ORIGINAL SIGNED BY: KURT D. FRITZ
DATE ORIGINAL SIGNED: 9/18/2000
SEAL NUMBER: 9404
ORIGINAL STORED AT: ERDB DOCUMENT CONTROL

PROFESSIONAL ENGINEER REGISTERED 9404 STATE OF IDAHO KURT D. FRITZ

FOR DRAWING INDEX SEE DRAWING NO. 515158	SUBCONTRACT NO. S00-588051	INEEL
HORIZONTAL 1"=20' VERTICAL 1"=5'	REVIEWER: M.S. KAPTEIN DESIGN: KURT FRITZ DRAWN: ROB HERGESHEIMER PROJECT NO. 020078 SPEC CODE	INEEL OU 3-13 GROUP 1 TANK FARM INTERIM ACTION PHASE 1 & 2 GRADE PROFILES 1, 2 AND 3
DESIGN PHASE: AFC	FOR REVIEW/APPROVAL SIGNATURES SEE DWG NO. 68386	SIZE D; CASE CODE; INDEX CODE NUMBER AREA 200, TYPE 0100, G. 02, SEQ. 090; DWG-515185; REV
QUALITY LEVEL: 3	EFFECTIVE DATE: 9/18/2000	SCALE: NOTED; SHEET C-26

File: 515185.DWG ID: RDHS
Path: C:\OU3-13-TANKFARM\RELEASE\ Date: 09/19/00 - 11:01 A.M. Layout Name: D Size

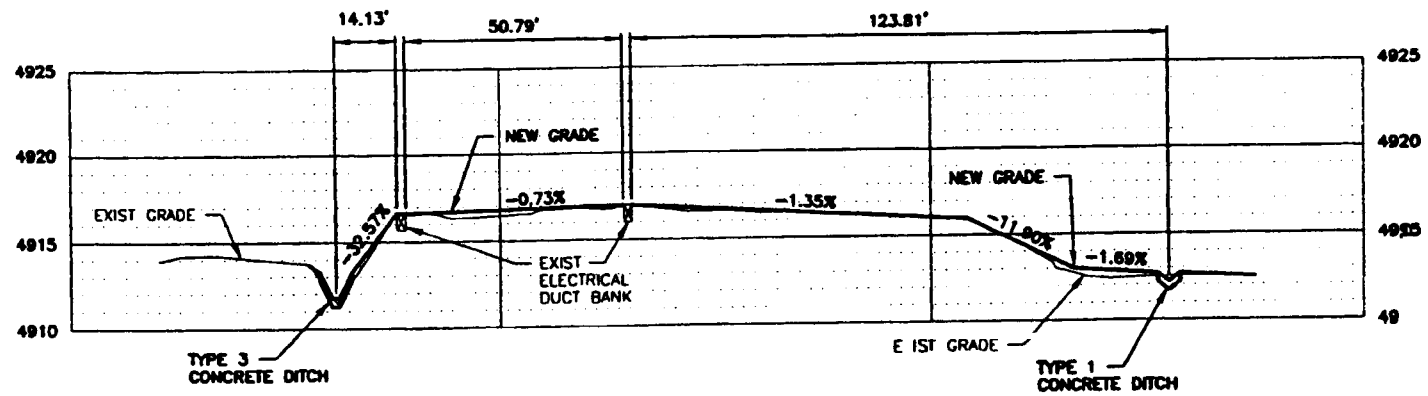

GRADE PROFILE (U / C-25)
SCALE: HOR 1"=20' VER 1"=5'

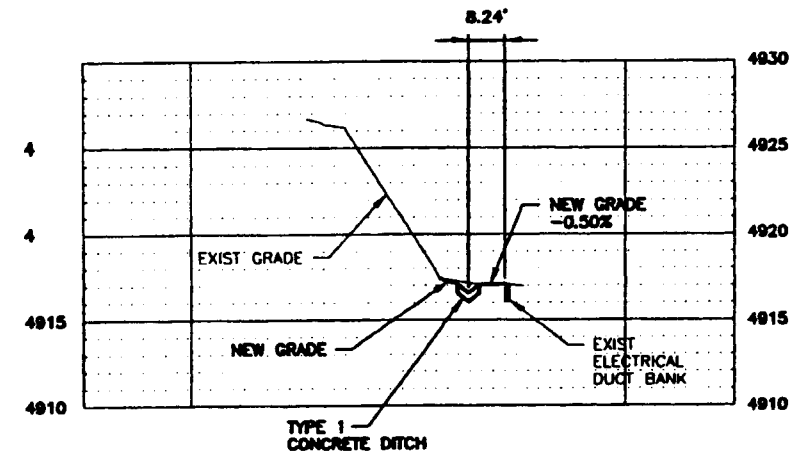

GRADE PROFILE (W / C-25)
SCALE: HOR 1"=20' VER 1"=5'

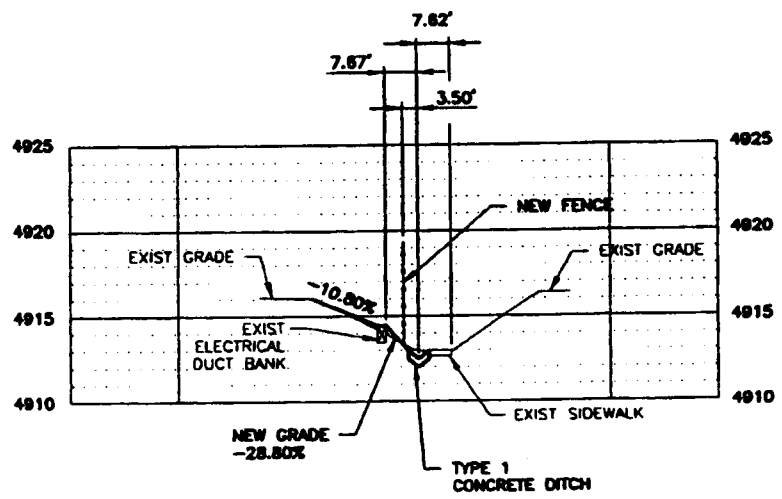

GRADE PROFILE (V / C-25)
SCALE: HOR 1"=20' VER 1"=5'

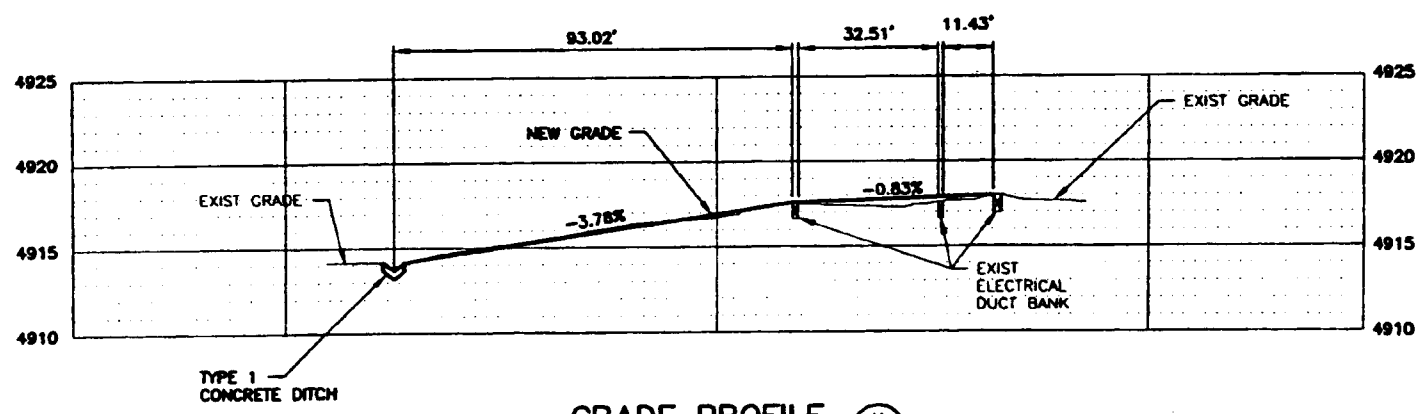

GRADE PROFILE (Y / C-25)
SCALE: HOR 1"=20' VER 1"=5'

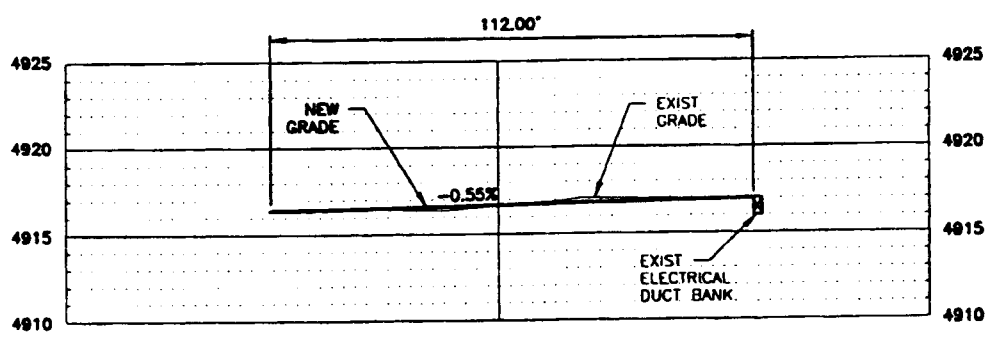

GRADE PROFILE (AA / C-25)
SCALE: HOR 1"=20' VER 1"=5'

REVISION: 0
ORIGINAL SIGNED BY: KURT D. FRITZ
DATE ORIGINAL SIGNED: 9/18/2000
SEAL NUMBER: 9404
ORIGINAL STORED AT: EROB DOCUMENT CONTROL

PROFESSIONAL ENGINEER REGISTERED 9404 STATE OF IDAHO KURT D. FRITZ

FOR DRAWING INDEX SEE DRAWING NO. 515158	SUBCONTRACT NO. 500-588051
HORIZONTAL 1"=20'	REDMASTER: M.S. KAPTEIN
VERTICAL 1"=5'	DESIGN: KURT FRITZ
	DRAWN: ROB HERGESHEIMER
	PROJECT NO. 020070
	SPEC CODE
	FOR REVIEW/APPROVAL SIGNATURES SEE BAR NO. 68306
DESIGN PHASE: AFC	
QUALITY LEVEL: 3	EFFECTIVE DATE: 9/18/2000

INEEL
INEEL
OU 3-13 GROUP 1
TANK FARM INTERIM ACTION
PHASE 1 & 2
GRADE PROFILES 4, 5, 6 AND 7

SIZE	CADD CODE	INDEX CODE NUMBER				DWG	REV
		AKA	TYP	Q	SEQ		
D		200	0100	02	000	515186	

SCALE: NOTED SHEET C-27

File: C-27.DWG Path: G:\OU3-13-TANKFARM\9-8-00 Date: 09/08/00 - 4:38 P.M. Layout Name: D Size

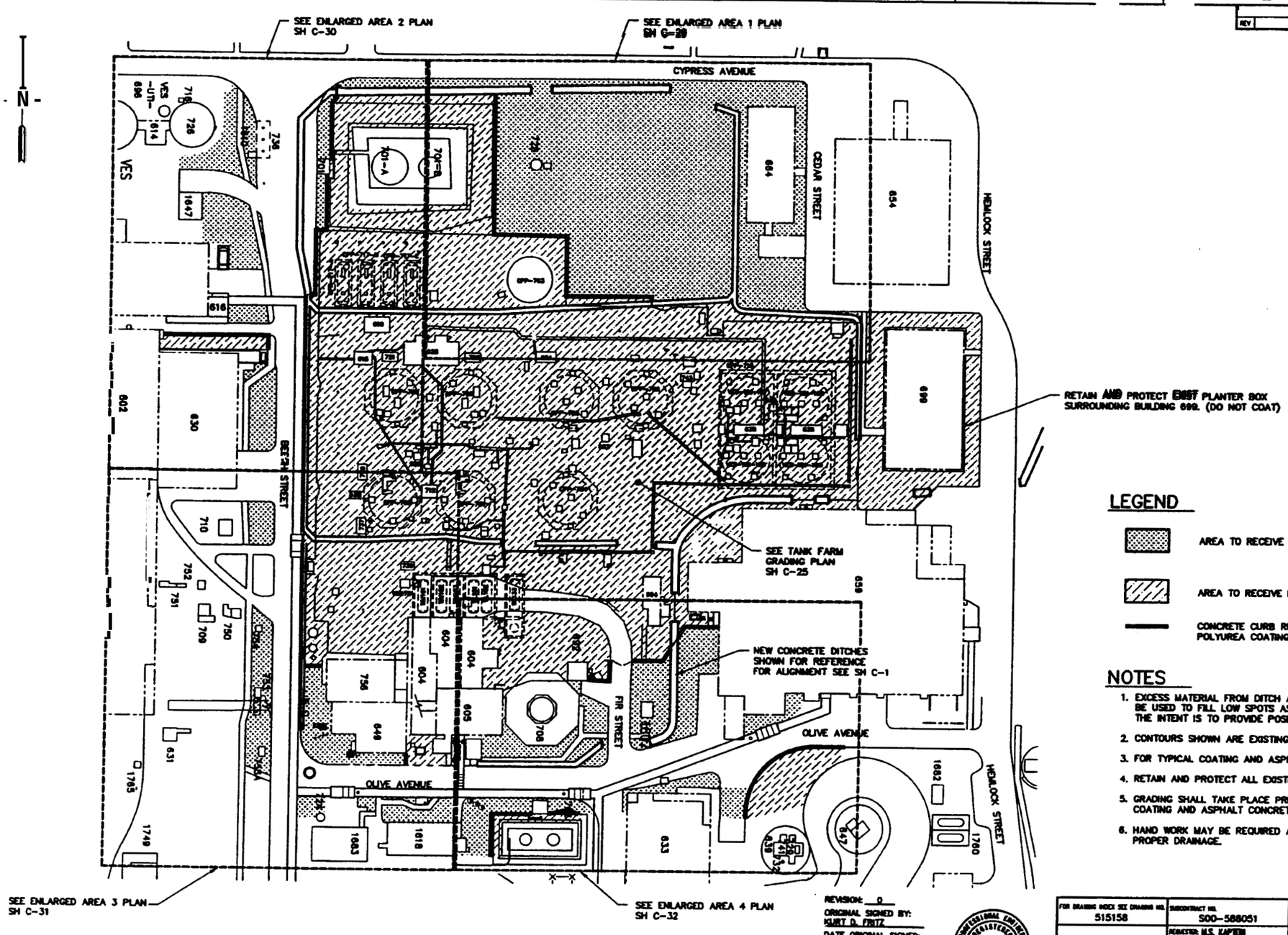

POLYUREA COATING AND ASPHALT CONCRETE PLAN

LEGEND

- AREA TO RECEIVE ASPHALT CONCRETE 100,405 SF APPROXIMATE
- AREA TO RECEIVE POLYUREA COATING 215,460 SF APPROXIMATE
- CONCRETE CURB REQUIRED BETWEEN ASPHALT CONCRETE AND POLYUREA COATING 1,140 LF APPROXIMATE.

NOTES

1. EXCESS MATERIAL FROM DITCH AND EVAPORATION POND CONSTRUCTION SHALL BE USED TO FILL LOW SPOTS AS NEEDED. COMPACT AND GRADE TO DRAIN. THE INTENT IS TO PROVIDE POSITIVE DRAINAGE TO NEW CONCRETE DITCHES.
2. CONTOURS SHOWN ARE EXISTING.
3. FOR TYPICAL COATING AND ASPHALT CONCRETE PAVING DETAILS SEE SH C-29.
4. RETAIN AND PROTECT ALL EXISTING STRUCTURES AND UTILITIES.
5. GRADING SHALL TAKE PLACE PRIOR TO THE INSTALLATION OF THE POLYUREA COATING AND ASPHALT CONCRETE.
6. HAND WORK MAY BE REQUIRED AROUND EXISTING STRUCTURES TO PROVIDE PROPER DRAINAGE.

REVISION: 0
ORIGINAL SIGNED BY: KURT D. FRITZ
DATE ORIGINAL SIGNED: 9/18/2000
SEAL NUMBER: 9404
ORIGINAL STORED AT: ERDB DOCUMENT CONTROL

PROFESSIONAL ENGINEER REGISTERED 9404 STATE OF IDAHO KURT D. FRITZ

REVISIONS		
REV	DESCRIPTION	EFFECTIVE DATE

FOR DRAWING INDEX SEE DRAWING NO. 515158

SCALE: 1" = 50.0'

DESIGN PHASE: AFC
QUALITY LEVEL: 3

SUBCONTRACT NO. S00-588051
REMEDIATOR: M.S. KAPTEIN
DESIGN: KURT FRITZ
DRAWN: ROB HERGESHEIMER
PROJECT NO. 020978
SPEC CODE
FOR REVIEW/APPROVAL SIGNATURES SEE DAR NO. 68386
EFFECTIVE DATE: 9/18/2000

INEEL

INEEL
OU 3-13 GROUP 1
TANK FARM INTERIM ACTION
PHASE 1 & 2
POLYUREA COATING AND ASPHALT CONCRETE PLAN

SIZE D | CADD CODE | INDEX CODE NUMBER: AREA 200, TYPE 0100, SEQ 02, DISC 080 | DWG- 515187 | REV
SCALE: 1"=50.0'
SHEET C-28

REVISIONS		
REV	DESCRIPTION	EFFECTIVE DATE

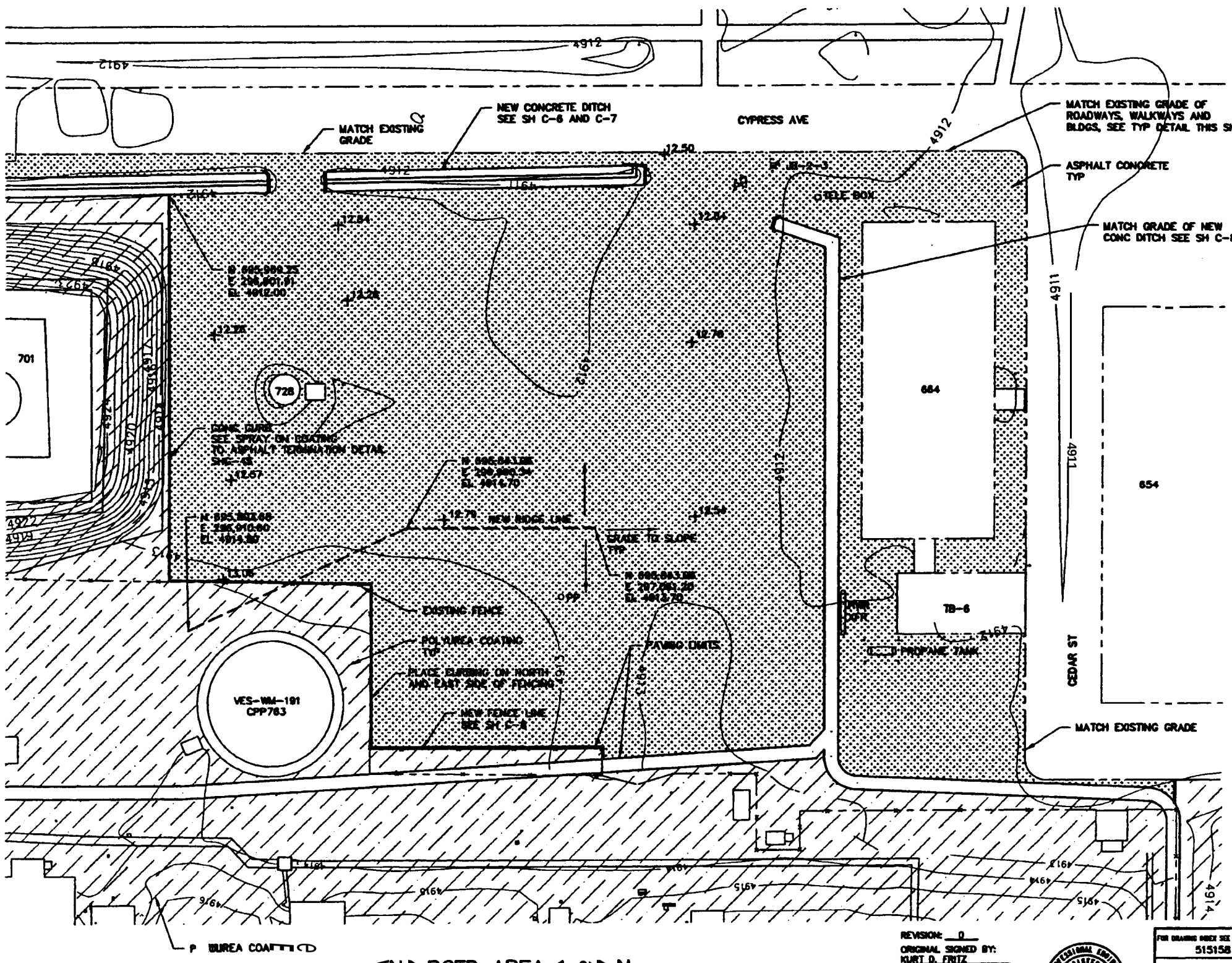

ENLARGED AREA 1 PLAN

SCALE: 1"=20.0'

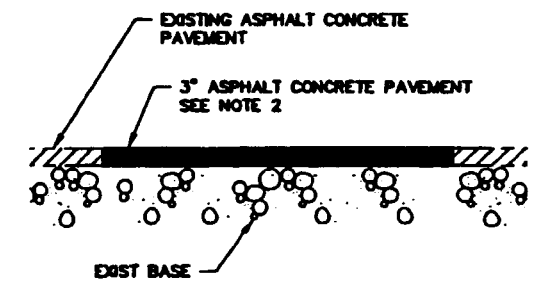

TYPICAL ASPHALT CONCRETE DETAIL

NTS

NOTES

1. HORIZONTAL COORDINATES ARE INTEC SITE SPECIFIC. VERTICAL DATUM IS NRTS (0.35' HIGHER THAN INTEC DATUM).
2. ALL AREAS TO RECEIVE ASPHALT CONCRETE SHALL HAVE THE EXISTING PAVEMENT SAW CUT TO CLEAN STRAIGHT EDGES. EXCAVATE EXISTING MATERIAL AS REQUIRED TO ATTAIN ELEVATIONS SHOWN ON PLANS. USE EXCAVATED MATERIAL AS FILL MATERIAL AND COMPACT AS REQUIRED.
3. EDGES OF EXISTING PAVEMENT AND NEW ASPHALT CONCRETE SHALL HAVE A TACK COAT APPLIED PRIOR TO THE PLACEMENT OF NEW ASPHALT CONCRETE.

REVISION: 0
ORIGINAL SIGNED BY: KURT D. FRITZ
DATE ORIGINAL SIGNED: 9/18/2000
SEAL NUMBER: 9404
ORIGINAL STORED AT: CROB DOCUMENT CONTROL

PROFESSIONAL ENGINEER REGISTERED 9404 STATE OF IDAHO KURT D. FRITZ

FOR DRAWING INDEX SEE DRAWING NO. 515158	SUBCONTRACT NO. S00-588051	INEEL	
SCALE: 1" = 20.0'	REVIEWED: M.S. KAPTEIN DESIGN: KURT FRITZ DRAWN: Gene K. Williams PROJECT NO. 020978 SPEC CODE	INEEL OU 3-13 GROUP 1 TANK FARM INTERIM ACTION PHASE 1 & 2 ENLARGED AREA 1	
DESIGN PHASE: AFC	FOR REVIEW/APPROVAL SIGNATURES SEE DAR NO. 68388	SIZE D / CADD CODE / WORK CODE: AREA 200, TYPE 0100, PL 02, DISC 090	DWG- 515188 REV
QUALITY LEVEL: 3	EFFECTIVE DATE: 9/18/2000	SCALE: NOTED	SHEET C-29

File: 515188.dwg
Path: P:\3-13\
ID: MKG
Layout Name: Layout1
Date: 09/19/00 - 3:58 P.M.

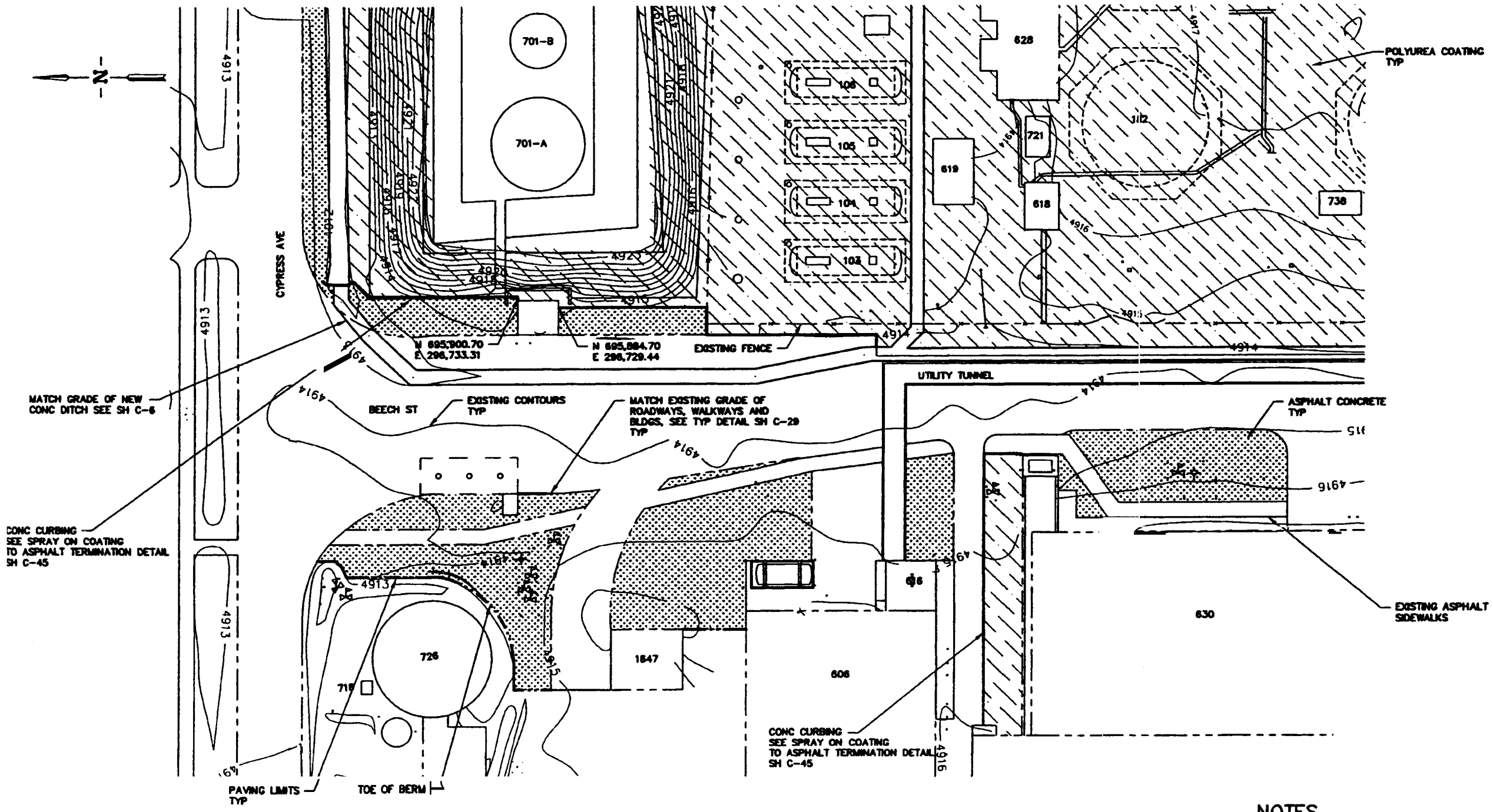

ENLARGED AREA 2 PLAN

NOTES

1. HORIZONTAL COORDINATES ARE INTEC SITE SPECIFIC. VERTICAL DATUM IS NRTS (0.35' HIGHER THAN INTEC DATUM).

REVISION: 0
ORIGINAL SIGNED BY: KURT D. FRITZ
DATE ORIGINAL SIGNED: 9/18/2000
SEAL NUMBER: 9404
ORIGINAL STORED AT: CROB DOCUMENT CONTROL

PROFESSIONAL ENGINEER REGISTERED 9404 STATE OF IDAHO KURT D. FRITZ

FOR DRAWING INDEX SEE DRAWING NO. 515158	SUBCONTRACT NO. S00-588051	INEEL
SCALE: 1" = 20.0'	REQUESTER: M.S. KAPTEIN	INEEL OU 3-13 GROUP 1 TANK FARM INTERIM ACTION PHASE 1 & 2 ENLARGED AREA 2
	DESIGN: KURT FRITZ	
	DRAWN: Gregory K. Williams	
	PROJECT NO. 020876	
	SPEC CODE	
DESIGN PHASE: AFC	FOR REVIEW/APPROVAL SIGNATURES SEE DAR NO. 68388	SIZE D; CALC CODE; INDEX CODE NUMBER 200 0100 02 000; DWG- 515189; REV
QUALITY LEVEL: 3	EFFECTIVE DATE: 9/18/2000	SCALE 1"=20.0'; SHEET C-30

REVISIONS

REV	DESCRIPTION	EFFECTIVE DATE

File: 515189.dwg Path: P:\OU3-13 ID: MKG Layout Name: Layout1 Date: 09/18/00 - 1:00 P.M.

REVISIONS		
REV	DESCRIPTION	EFFECTIVE DATE:

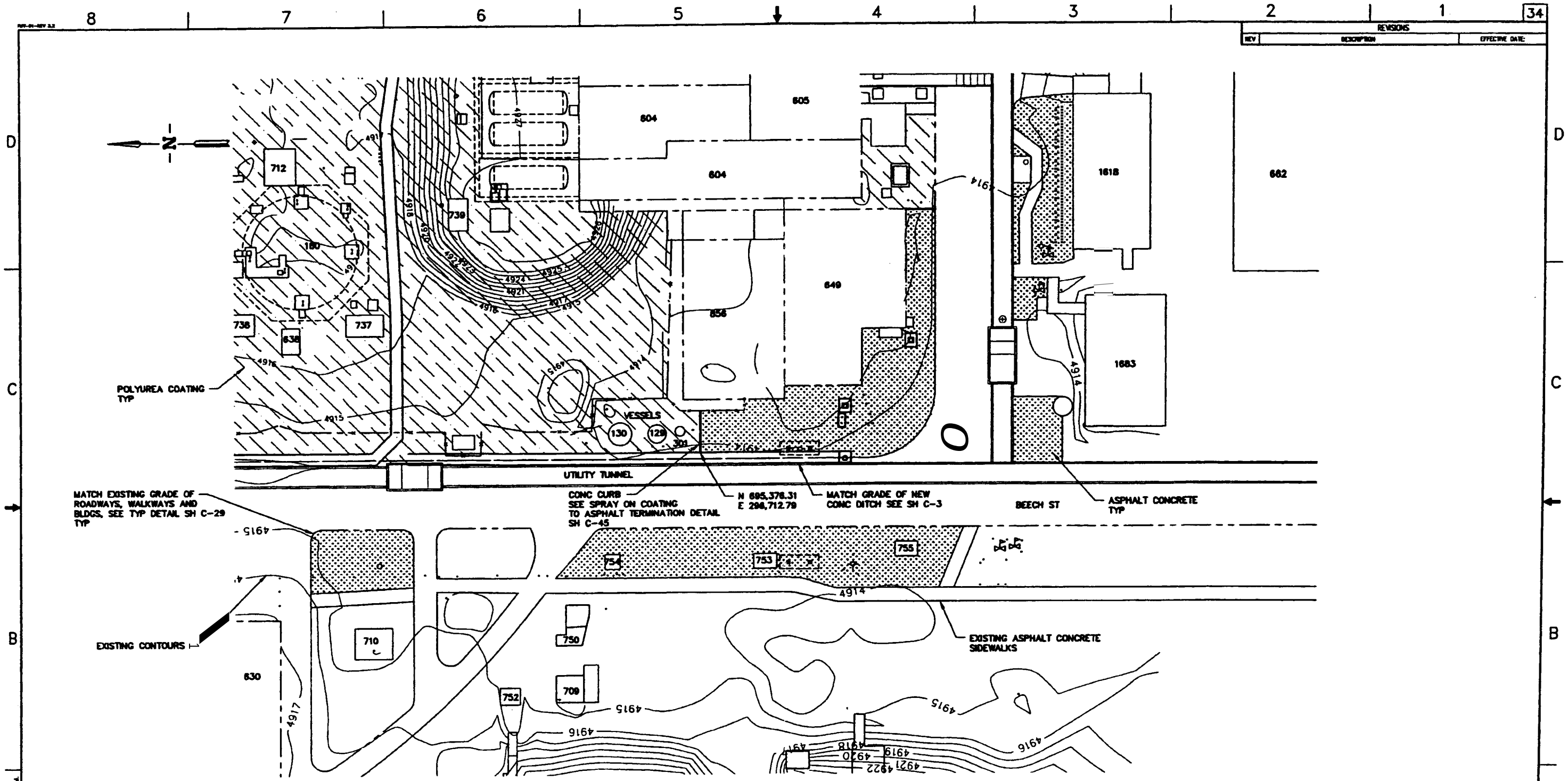

ENLARGED AREA 3 PLAN

NOTES

1. HORIZONTAL COORDINATES ARE INTEC SITE SPECIFIC. VERTICAL DATUM IS NRTS (0.35' HIGHER THAN INTEC DATUM).

REVISION: 0
ORIGINAL SIGNED BY: KURT D. FRITZ
DATE ORIGINAL SIGNED: 9/18/2000
SEAL NUMBER: 9404
ORIGINAL STORED AT: ERDB DOCUMENT CONTROL

PROFESSIONAL ENGINEER REGISTERED 9404 STATE OF IDAHO KURT D. FRITZ

FOR DRAWING INDEX SEE DRAWING NO. 515158	SUBCONTRACT NO. S00-588051	INEEL
SCALE: 1" = 20.0'	ENGINEER: M.S. KAPTEIN	INEEL OU 3-13 GROUP 1 TANK FARM INTERIM ACTION PHASE 1 & 2 ENLARGED AREA 3
	DESIGN: KURT FRITZ	
	DRAWN: Gene K. Tillman	
	PROJECT NO. 020878	
	SPEC CODE	
DESIGN PHASE: AFC	FOR REVIEW/APPROVAL SIGNATURES SEE DAR NO. 00386	SIZE D · CADD CODE · WBS CAD NUMBER AREA 200 · TYPE 0100 · 0 02 · DRE 080 · DWG-515190 · REV
QUALITY LEVEL: 3	EFFECTIVE DATE: 9/18/2000	SCALE: 1"=20.0' · SHEET C-31

File: 515190.dwg
Path: P:\OU3-13
ID: MKG
Layout Name: Layout1
Date: 09/18/00 - 4:53 P.M.

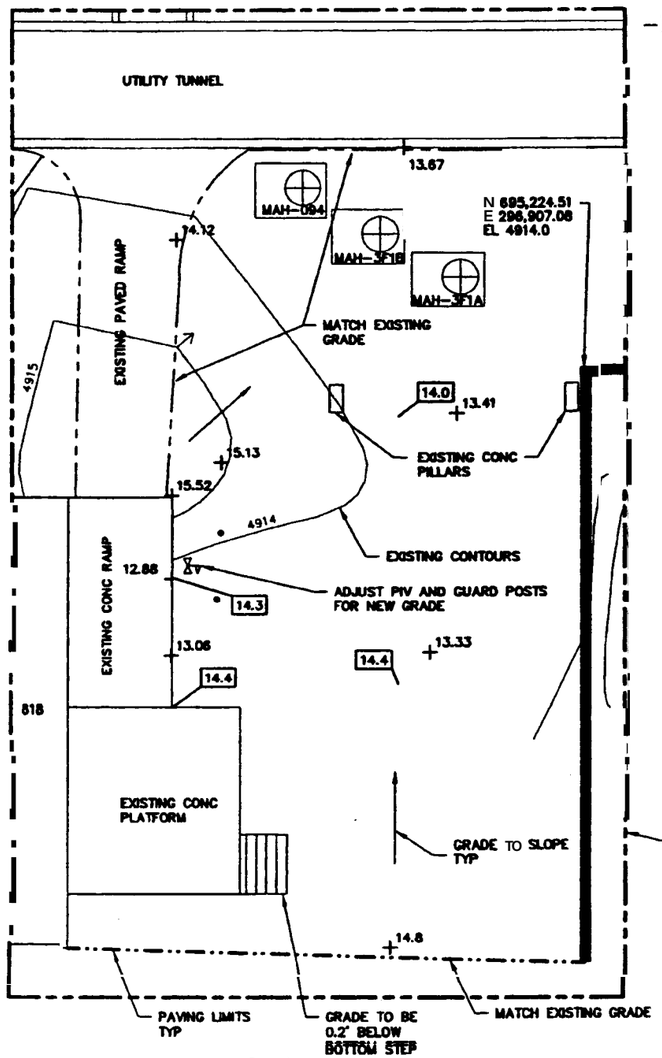

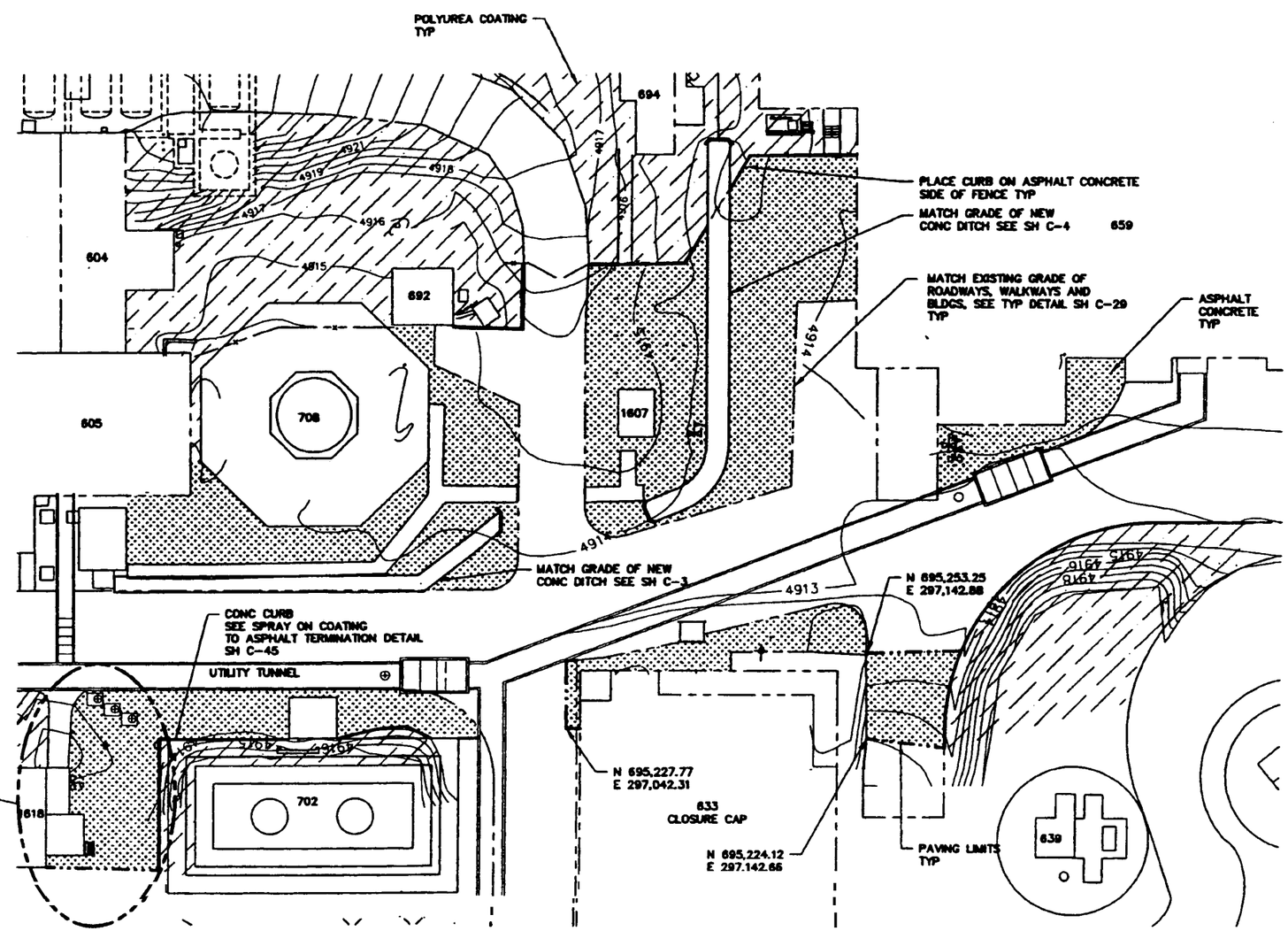

ENLARGED AREA 4 PLAN

SCALE: 1"=20.0'

NOTES

1. HORIZONTAL COORDINATES ARE INTEC SITE SPECIFIC. VERTICAL DATUM IS NGVD (0.35' HIGHER THAN INTEC DATUM)

REVISION: 0
ORIGINAL SIGNED BY: KURT D. FRITZ
DATE ORIGINAL SIGNED: 9/18/2000
SEAL NUMBER: 9404
ORIGINAL STORED AT: ENOB DOCUMENT CONTROL

PROFESSIONAL ENGINEER REGISTERED 9404 STATE OF IDAHO KURT D. FRITZ

FOR DRAWING INDEX SEE DRAWING NO.	515158
SUBCONTRACT NO.	S00-588051
SUBMITTED:	M.S. KAPTEIN
DESIGN:	KURT FRITZ
DRAWN:	Gregg K. Tilson
PROJECT NO.	020878
SPEC CODE	
FOR REVIEW/APPROVAL SIGNATURES SEE DAR NO. 68386	
EFFECTIVE DATE:	9/18/2000
DESIGN PHASE:	AFC
QUALITY LEVEL:	3

INEEL

INEEL
OU 3-13 GROUP 1
TANK FARM INTERIM ACTION
PHASE 1 & 2
ENLARGED AREA 4

SIZE	CADD CODE	MAX CODE NUMBER AREA	TYPE	A	SEQ	DWG-515191	REV
D		200	0100	02	080		

SCALE: NOTED
SHEET C-32

File: 515191.dwg Path: P:\OU3-13 ID: MKG Layout Name: Layout1 Date: 09/18/00 - 4:04 P.M.

REVISIONS		
REV	DESCRIPTION	EFFECTIVE DATE

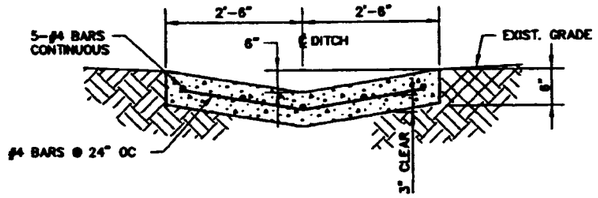

TYP CONCRETE DITCH DETAIL (11 / C-3)

TYPE 1
NTS

REF C-6

NOTES

1. PROVIDE IMPRESSED CONTRACTION JOINTS AT 5'-0" OC MAXIMUM.
2. PROVIDE EXPANSION JOINTS AT 40'-0" OC MAXIMUM. SEE TYP DETAIL THIS SHEET.

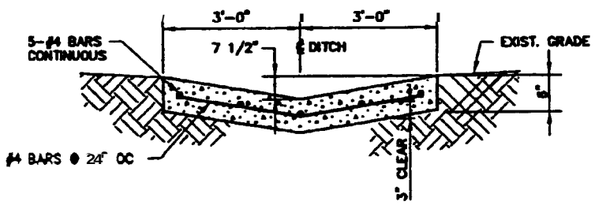

TYP CONCRETE DITCH DETAIL (12 / C-6)

TYPE 2
NTS

NOTES

1. PROVIDE IMPRESSED CONTRACTION JOINTS AT 5'-0" OC MAXIMUM.
2. PROVIDE EXPANSION JOINTS AT 40'-0" OC MAXIMUM. SEE TYP DETAIL THIS SHEET.

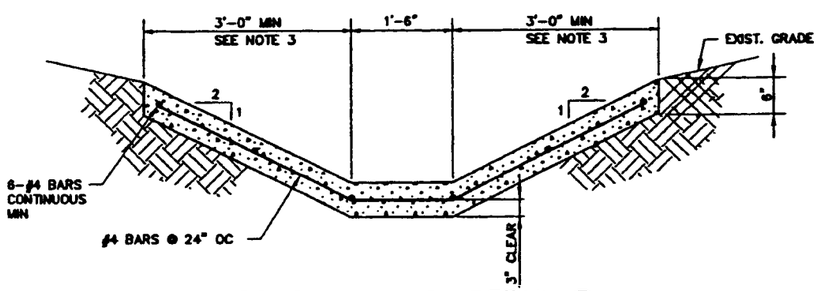

TYP CONCRETE DITCH DETAIL (13 / C-3)

TYPE 3
NTS

REF C-5 C-6 C-7 C-9

NOTES

1. PROVIDE IMPRESSED CONTRACTION JOINTS AT 5'-0" OC MAXIMUM.
2. PROVIDE EXPANSION JOINTS AT 40'-0" OC MAXIMUM. SEE TYP DETAIL THIS SHEET.
3. CONCRETE DITCH SHALL EXTEND TO THE TOP OF EXIST.ING DITCH BANK.

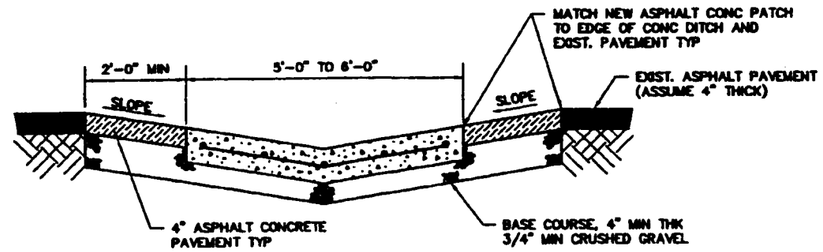

TYP CONCRETE DITCH THROUGH PAVEMENT DETAIL (C-6)

NTS

NOTES

1. ALL AREAS TO BE PATCHED SHALL HAVE THE EXIST.ING PAVEMENT SAW CUT TO CLEAN STRAIGHT LINES.
2. EDGES OF EXIST.ING PAVEMENT AND NEW CONCRETE SHALL HAVE A TACK COAT APPLIED PRIOR TO THE PLACEMENT OF NEW ASPHALT CONCRETE.

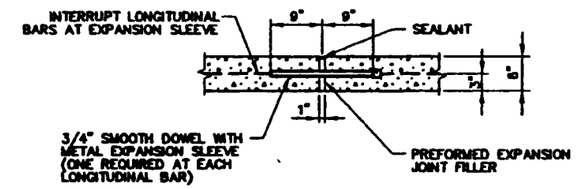

TYP EXPANSION JOINT DETAIL

NTS

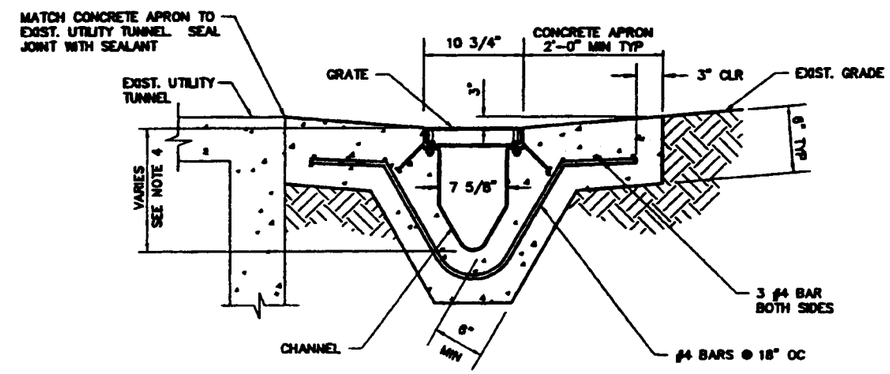

TYP 8" TRENCH DRAIN SECTION (A / C-3)

NTS

NOTES

1. PROVIDE IMPRESSED CONTRACTION JOINTS AT 5'-0' OC MAXIMUM.
2. PROVIDE EXPANSION JOINTS AT 50'-0" OC MAXIMUM.
3. INSTALL PER MANUFACTURERS RECOMMENDATIONS.
4. DEPTH VARIES FROM 5 1/2" m 29 1/2". SEE MANUFACTURERS DATA.

REVISION: 0
ORIGINAL SIGNED BY: KURT D. FRITZ
DATE ORIGINAL SIGNED: 9/18/2000
SEAL NUMBER: 9404
ORIGINAL STORED AT: EROB DOCUMENT CONTROL

PROFESSIONAL ENGINEER REGISTERED 9404 STATE OF IDAHO KURT D. FRITZ

FOR DRAWING INDEX SEE DRAWING NO. 515158	SUBCONTRACT NO. S00-588051	INEEL
NO SCALE	REVIEWED: M.S. KAPTEIN DESIGN: KURT FRITZ DRAWN: ROB HERGESHEIMER PROJECT NO. 020878 SPEC CODE	INEEL OU 3-13 GROUP 1 TANK FARM INTERIM ACTION PHASE 1 & 2 DITCH DETAILS AND SECTIONS
DESIGN PHASE: AFC	PER REVIEW/APPROVAL SIGNATURES SEE DAR NO. 68398	SIZE D; CADD CODE; INDEX CODE NUMBER AREA 200 TYPE 0100 A 62 SHEET 090; DWG-515192; REV
QUALITY LEVEL: 3	EFFECTIVE DATE: 9/18/2000	SCALE: NONE; SHEET C-33

File: C-33.DWG Path: C:\OU3-13-TANKFARM\9-d-08 ID: RDH5 Drawn in Model Space Date: 09/08/00 - 4:41 P.M.

REVISIONS		
REV	DESCRIPTION	EFFECTIVE DATE:

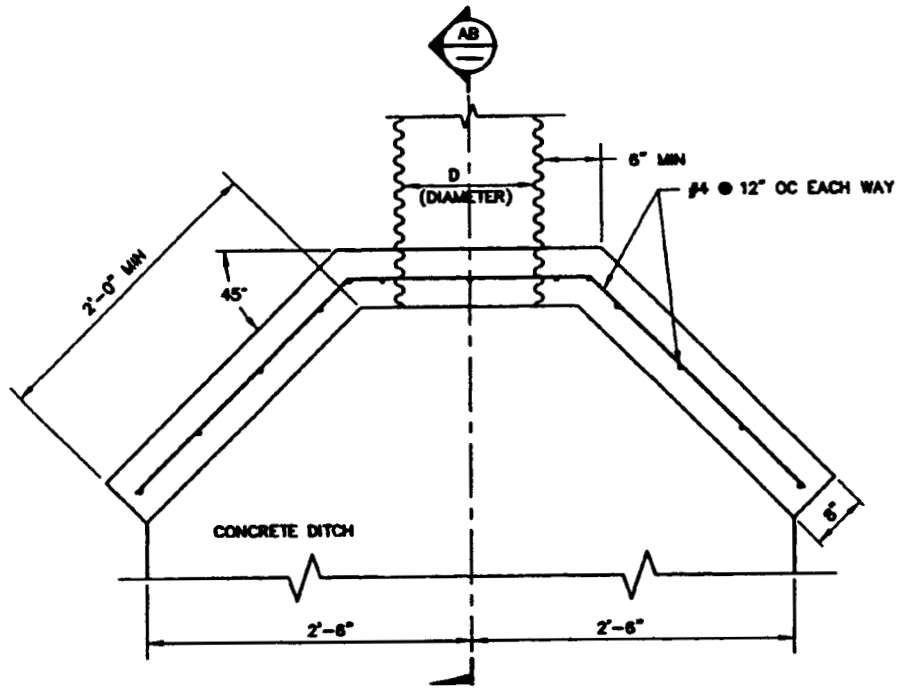

PLAN

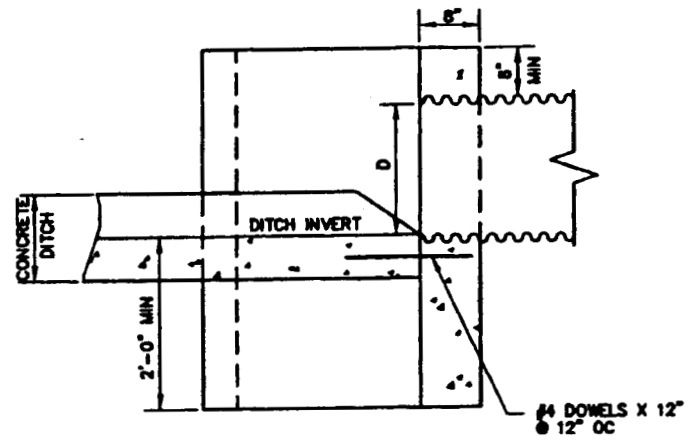

SECTION AB

TYPICAL HEADWALL WITH WINGS DETAIL (15 / C-3)
TYPE 1 DITCH NTS
REF C-8, C-13, C-15, C-16

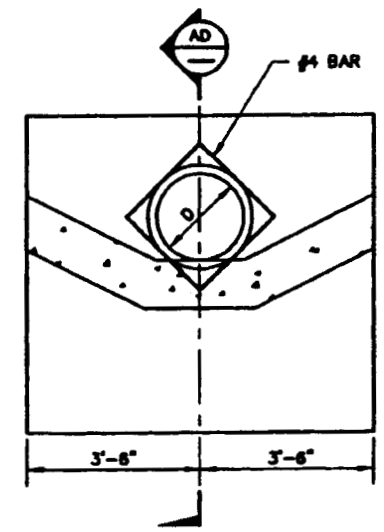

ELEVATION

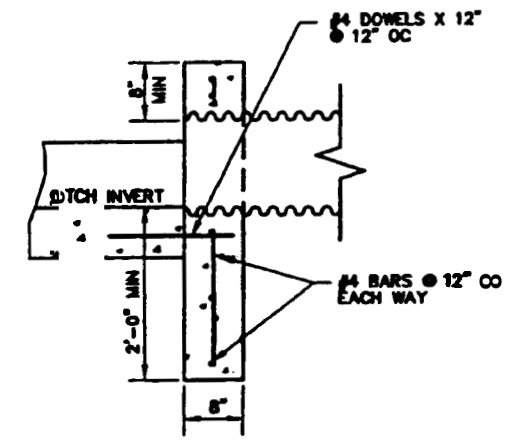

SECTION AD

TYPICAL ENDWALL DETAIL (17 / C-3)
TYPE 3 DITCH NTS
REF C-4, C-5, C-6, C-7, C-9, C-12, C-14, C-15, C-18

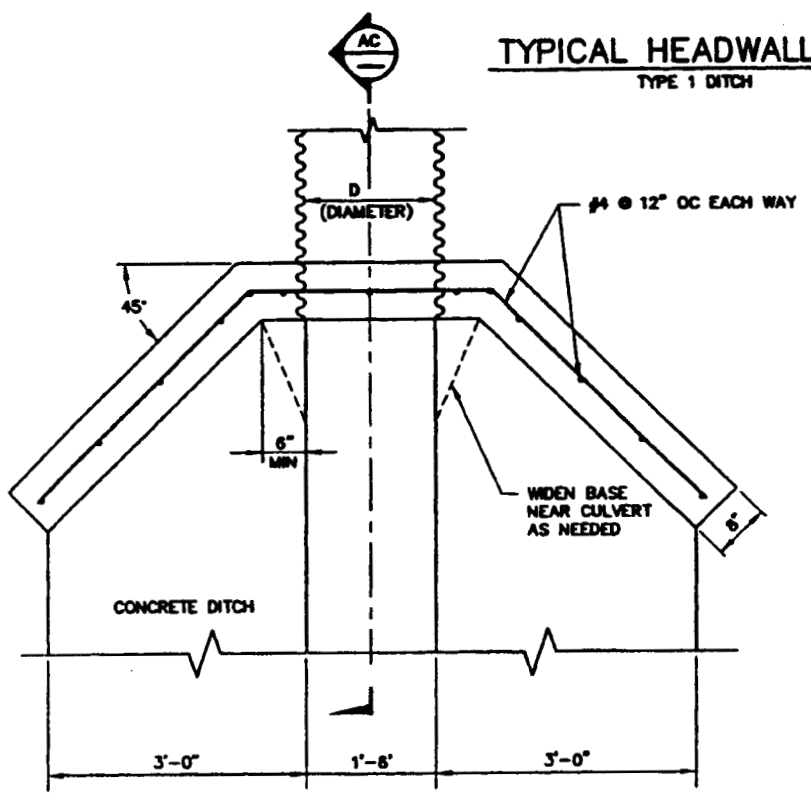

PLAN

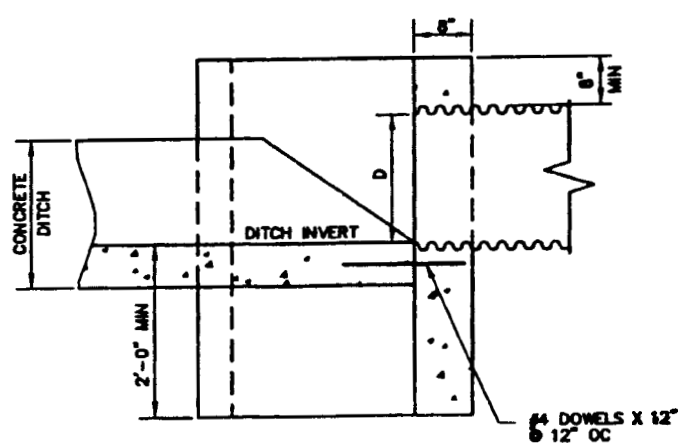

SECTION AC

TYPICAL HEADWALL WITH WINGS DETAIL (16 / C-4)
TYPE 3 DITCH NTS
REF C-5, C-6, C-7, C-9, C-12, C-14, C-18

NOTES

1. CONCRETE SHALL BE CLASS 40. REINFORCING STEEL SHALL BE #4 AS SHOWN.
2. PROVIDE 3/4" CHAMFER ON ALL EXPOSED CORNERS.

REVISION: 0
ORIGINAL SIGNED BY: KURT D. FRITZ
DATE ORIGINAL SIGNED: 9/18/2000
SEAL NUMBER: 9404
ORIGINAL STORED AT: EROB DOCUMENT CONTROL

PROFESSIONAL ENGINEER REGISTERED 9404 STATE OF IDAHO KURT D. FRITZ

FOR DRAWING INDEX SEE DRAWING NO. 515158	SUBCONTRACT NO. S00-588051	INEEL
NO SCALE	REDRAWN: M.S. KAPTEIN DESIGN: KURT FRITZ DRAWN: ROB HERGESHEIMER PROJECT NO. 020978 SPEC CODE	INEEL OU 3-13 GROUP 1 TANK FARM INTERIM ACTION PHASE 1 & 2 HEADWALL AND ENDWALL DETAILS & SECTIONS
DESIGN PHASE: AFC	FOR REVIEW/APPROVAL SIGNATURES SEE DWG NO. 68386	SIZE D; CAGE CODE; DWG-515193; REV
QUALITY LEVEL: 3	EFFECTIVE DATE: 9/18/2000	SCALE: NONE; SHEET C-34

C-34.DWG
G:\OU3-13-TANKFARM\9-18-00
Drawn in Model Space

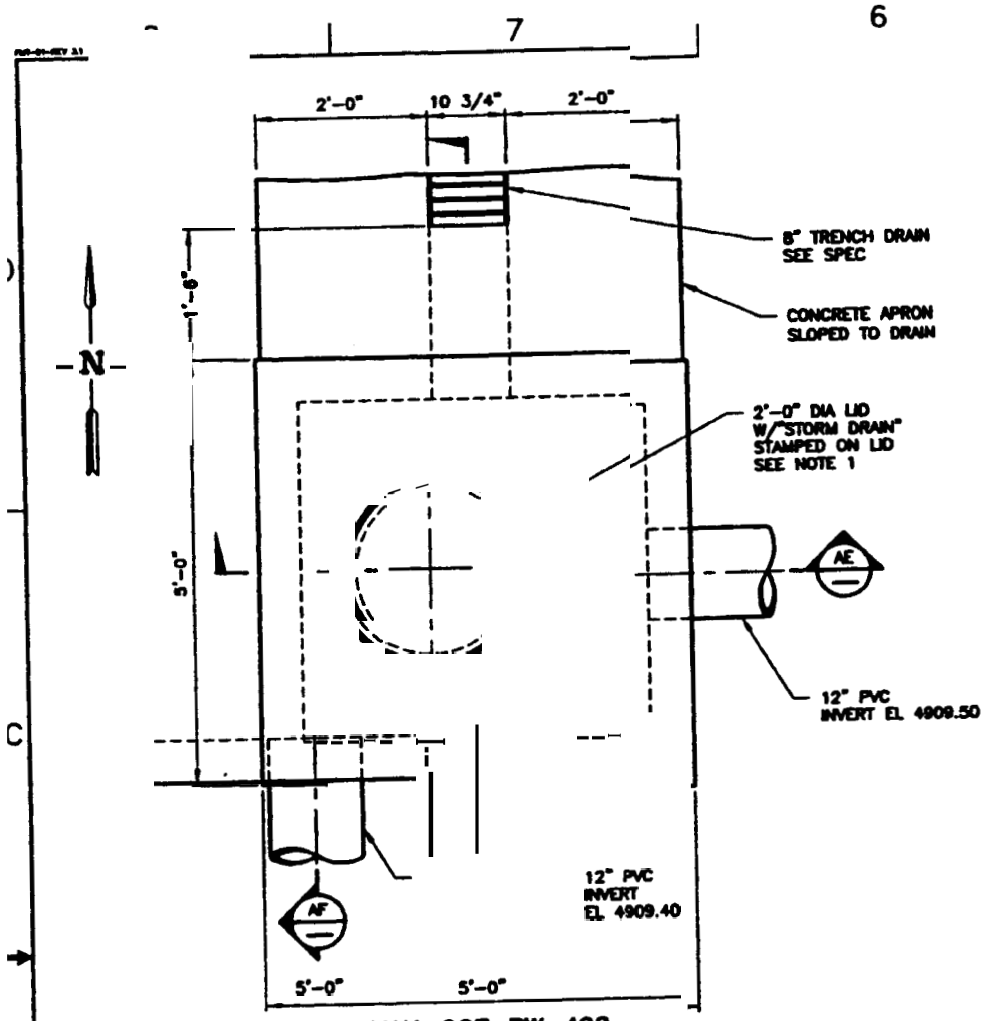

MAH-OGF-BW-492

DETAIL 18/C-3 REF C-11 C-42 C-46
1"=1'-0"

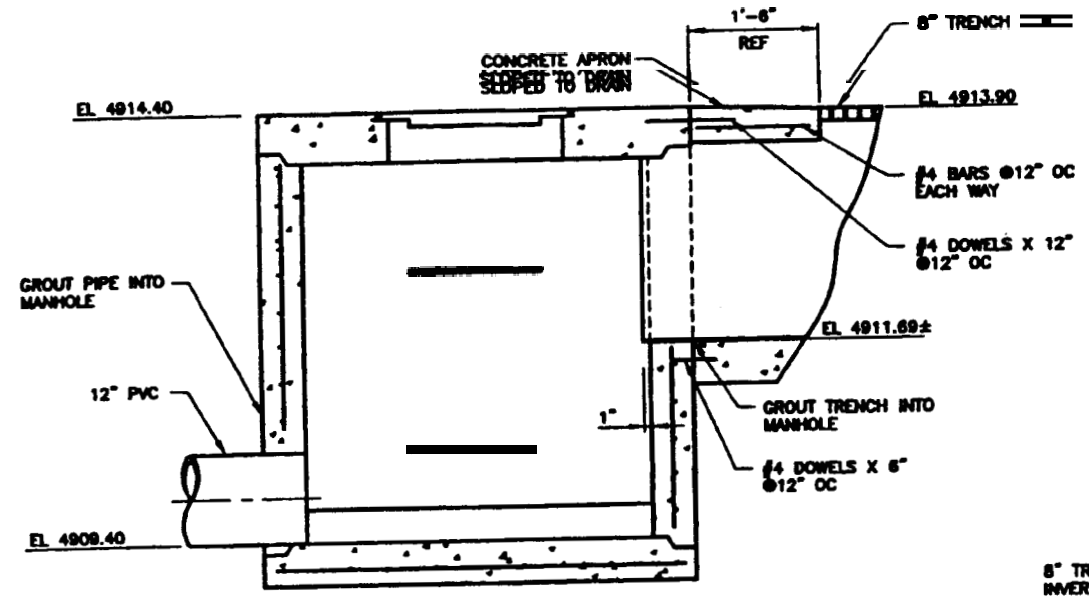

SECTION AF
SCALE: 1"=1'-0"

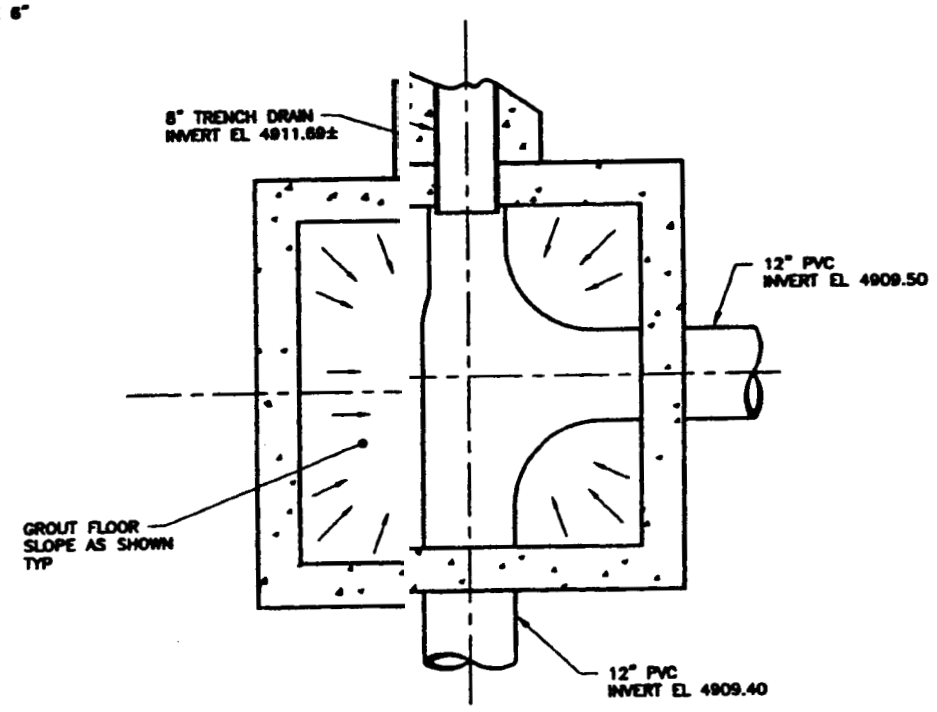

SECTION AG
SCALE: 1"=1'-0"

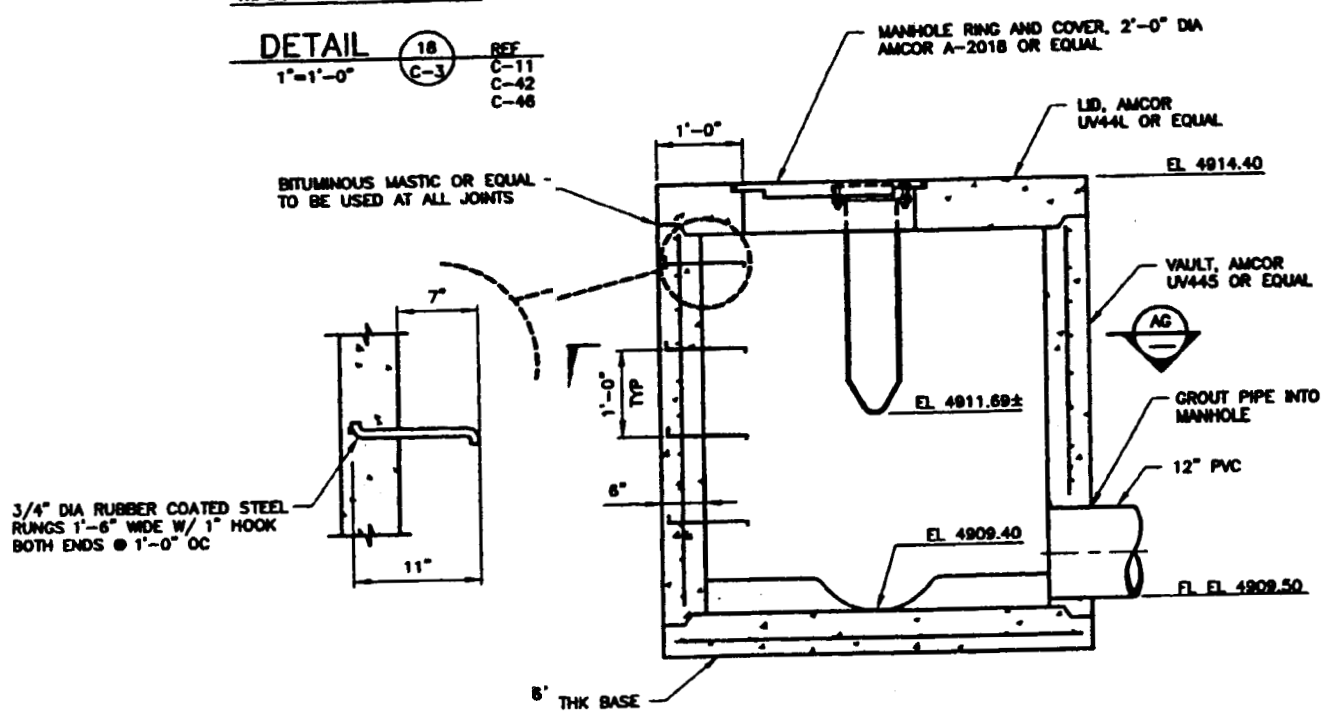

SECTION AE
SCALE: 1"=1'-0"

NOTES

1. MANHOLE LID AND COVER SHALL BE H-20 LOAD RATED.

REVISION: 0
ORIGINAL SIGNED BY: KURT D. FRITZ
DATE ORIGINAL SIGNED: 9/18/2000
SEAL NUMBER: 9404
ORIGINAL STORED AT: CH2M DOCUMENT CONTROL

PROFESSIONAL ENGINEER REGISTERED 9404 STATE OF IDAHO KURT D. FRITZ

FOR DRAWING INDEX SEE DRAWING NO. 515158

SCALE: 1" = 1'-0"

DESIGN PHASE: AFC
QUALITY LEVEL: 3

DESCRIPTION: 10-588051
DESIGNER: S. KAPTEIN
REVIEWER: FRITZ
DESIGN: KURT
DRAWN: ROB
PROJECT NO. 020078
SPEC CODE
PROJECT ENGINEER: HERGESHEIMER
PROJECT MANAGER: HUBBS
SEE DWG NO.
EFFECTIVE DATE: 9/18/2000

INEEL
INEEL
OU 3-13 GROUP 1
TANK FARM INTERIM ACTION
PHASE 1 & 2
MANHOLE DETAIL AND SECTIONS

SIZE D | CAGE CODE | INDEX CODE: AREA 200 | TYP 0100 | CA 62 | SEQ 090 | DWG-515194 | REV
SCALE: 1"=1'-0" | SHEET C-35

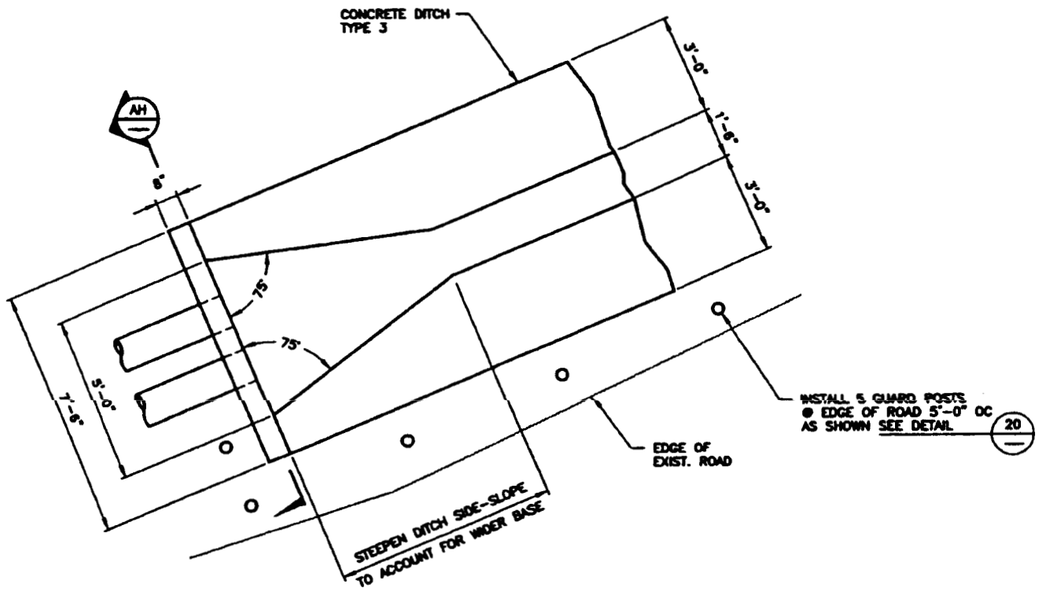

DETAIL 19 C-3 REF C-4 C-12 C-13
SCALE: 1/2"=1'-0"

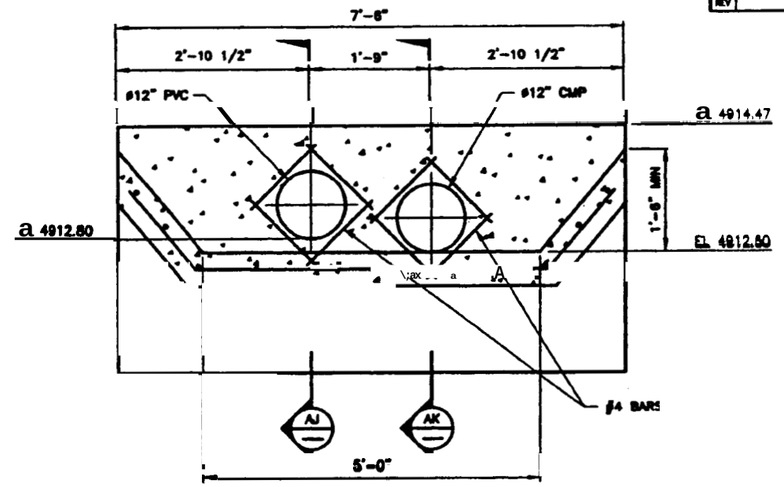

SECTION AH
SCALE: 1"=1'-0"

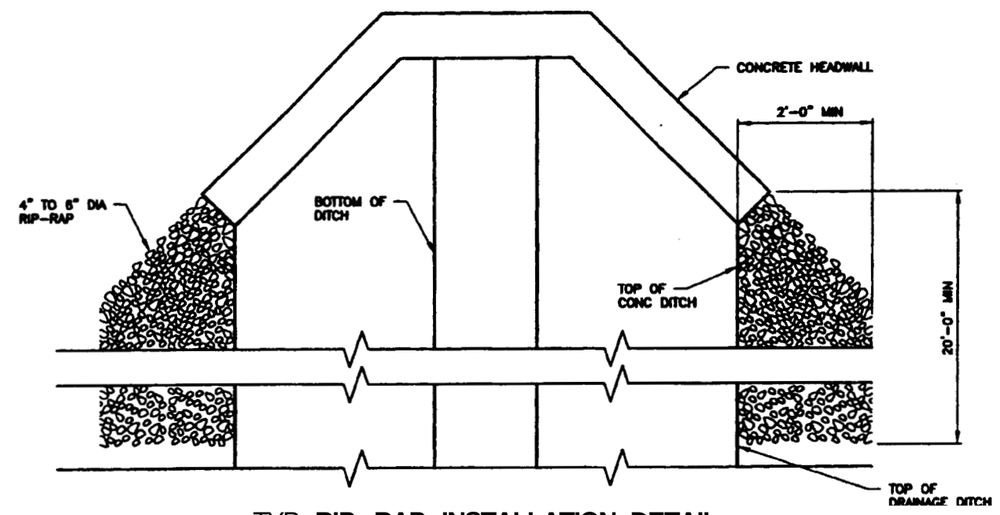

TYP RIP-RAP INSTALLATION DETAIL REF C-7
SCALE: 1"=1'-0"

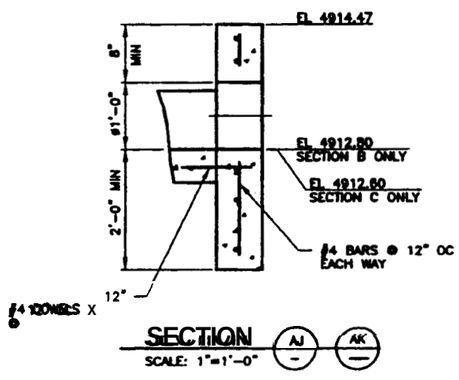

SECTION AJ AK
SCALE: 1"=1'-0"

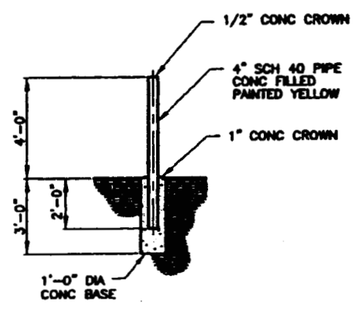

DETAIL 20 REF C-26
NTS

NOTES

1. 3/4" CHAMFER ON ALL EXPOSED CORNERS.

REVISION: 0
ORIGINAL SIGNED BY: KURT D. FRITZ
DATE ORIGINAL SIGNED: 9/18/2000
SEAL NUMBER: 9404
ORIGINAL STORED AT: EROB DOCUMENT CONTROL

PROFESSIONAL ENGINEER REGISTERED 9404 STATE OF IDAHO KURT D. FRITZ

FOR DRAWING INDEX SEE DRAWING NO.	515158
SCALE: 1/2" = 1'-0"	
SCALE: 1" = 1'-0"	
DESIGN PHASE:	AFC
QUALITY LEVEL:	3
SUBCONTRACT NO.	S00-588051
DESIGNER	M.S. KAPTEIN
DESIGN	KURT FRITZ
DRAWN	ROB HERGESHEIMER
PROJECT NO.	020878
SPEC CODE	
FOR REVIEW/APPROVAL SIGNATURES SEE DWG NO. 08386	
EFFECTIVE DATE:	9/18/2000

INEEL
INEEL
OU 3-13 GROUP 1
TANK FARM INTERIM ACTION
PHASE 1 & 2
ENDWALL DETAIL AND SECTIONS

SIZE	CAGE CODE	DWG CODE NUMBER				DWG-515195	REV
		AREA	TYPE	SEQ	CODE		
D		200	0100	02	000		

SCALE: NOTED
SHEET C-36

REVISIONS

REV	DESCRIPTION	EFFECTIVE DATE

39

X: C-36.DWG
ID: ROHS
G:\0013-13-TANKFARM\9-4-00 Layout Name: D Size
Date:09/06/00 - 4:44 P.M.

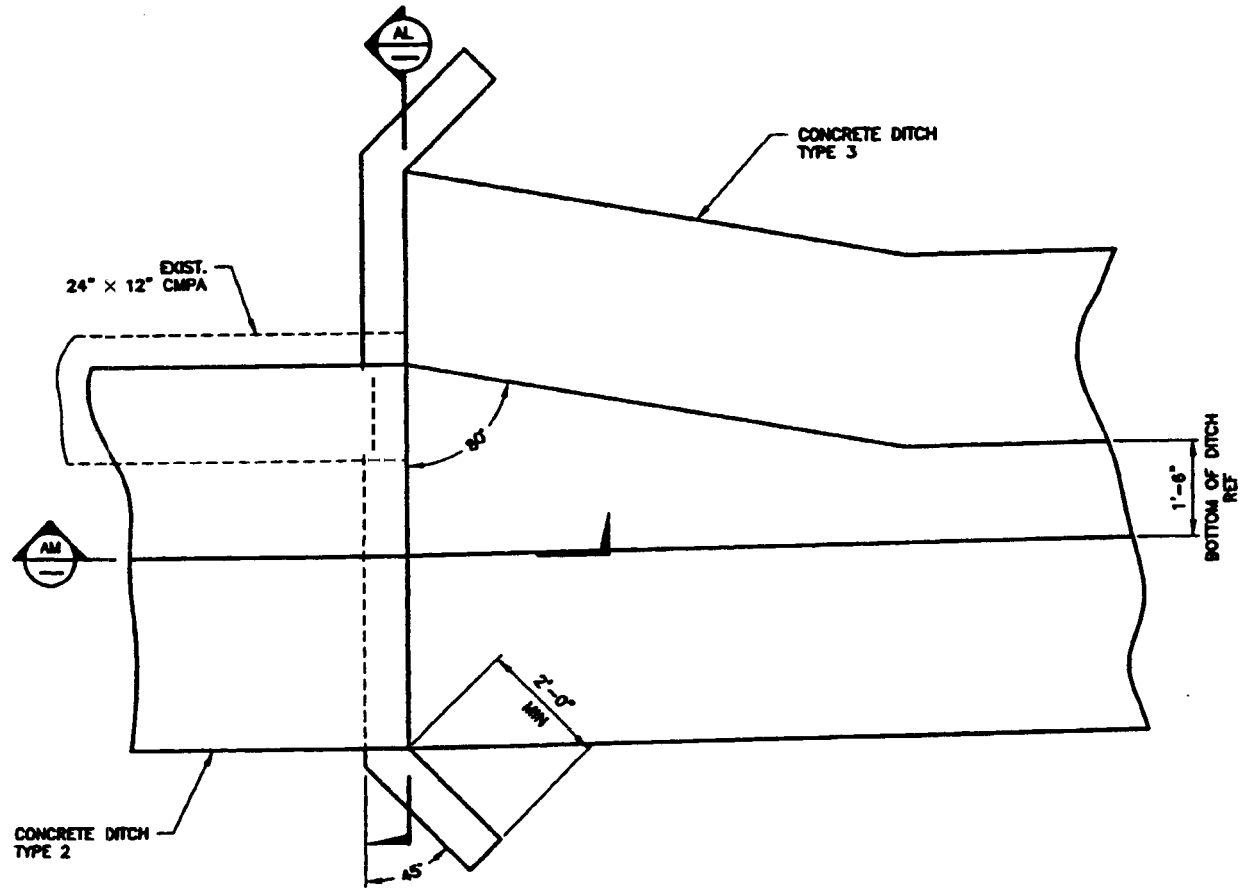

DETAIL (21) C-6 REF C-14
SCALE: 3/4"=1'-0"

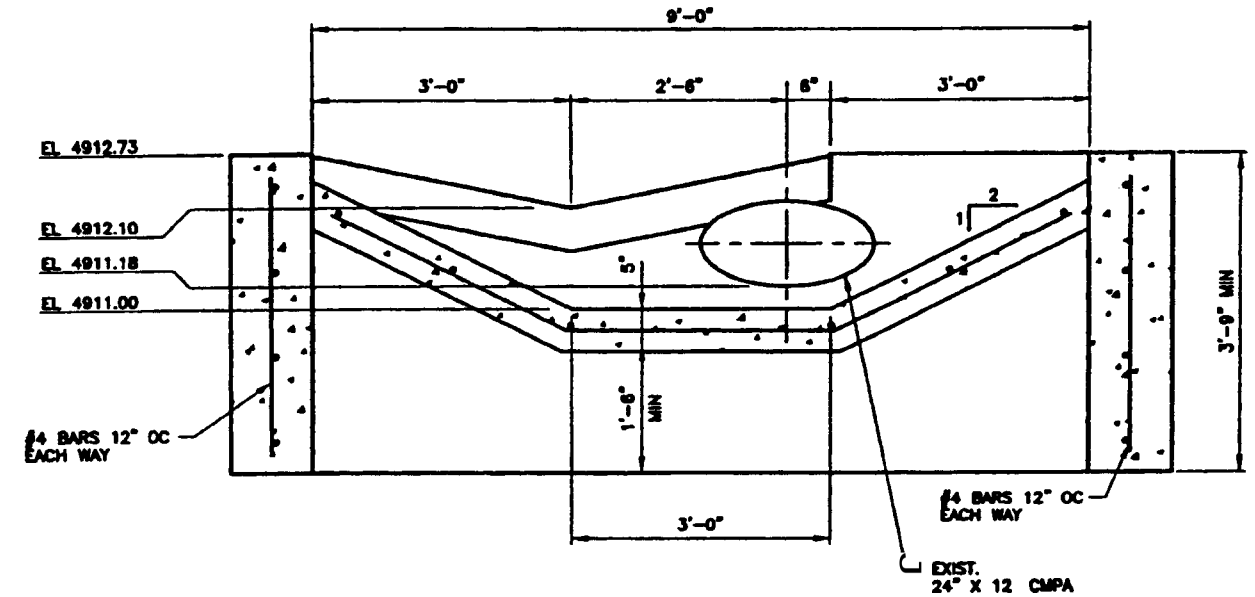

SECTION (AL)
SCALE: 1"=1'-0"

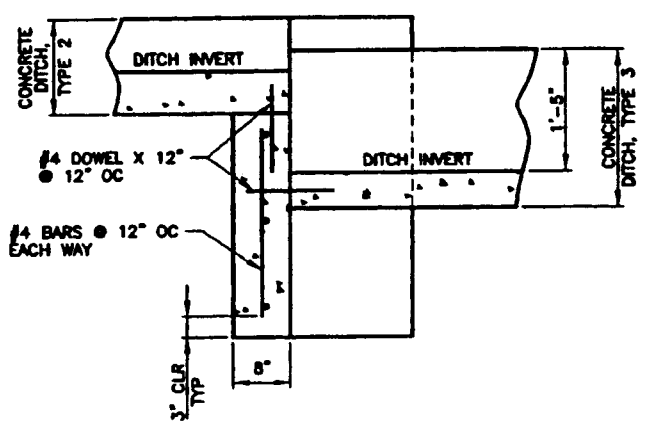

SECTION (AM)
SCALE:1"=1-0"

NOTES

1. PROVIDE 3/4" CHAMFER ON ALL EXPOSED CORNERS.

REVISIONS

REV	DESCRIPTION	EFFECTIVE DATE:

REVISION: 0
ORIGINAL SIGNED BY: KURT D. FRITZ
DATE ORIGINAL SIGNED: 9/18/2000
SEAL NUMBER: 9404
ORIGINAL STORED AT: EDMS DOCUMENT CONTROL

PROFESSIONAL ENGINEER REGISTERED 9404 STATE OF IDAHO KURT D. FRITZ

FOR DRAWING INDEX SEE DRAWING NO. 515158

SCALE: 1" = 1'-6"
SCALE: 3/4" = 1'-6"

DESIGN PHASE: AFC
QUALITY LEVEL: 3

SUBCONTRACT NO. S00-588051
ENGINEER: M.S. KAPTEIN
DESIGN: KURT FRITZ
DRAWN: ROB HERGESHEIMER
PROJECT NO. 020878
SPEC CODE
FOR REVIEW/APPROVAL SIGNATURES
SIZE BAR NO. 88386
EFFECTIVE DATE: 9/18/2000

INEEL
BATTELLE ENERGY ALLIANCE, LLC

INEEL
OU 3-13 GROUP 1
TANK FARM INTERIM ACTION
PHASE 1 & 2
ENDWALL DETAIL AND SECTIONS

SIZE D | CADE CODE | INDEX CODE NUMBER: AREA 200 | TYPE 0100 | CA 62 | SEQ 060 | DWG-515196 | REV
SCALE NOTED | SHEET C-37

File: C-37.DWG ID: 80245 Layout Name: 8 Size
Path: G:\OU3-13-INWST\ROA\P-e-Ro Modified:9/18/00 - 3:53 P.M.

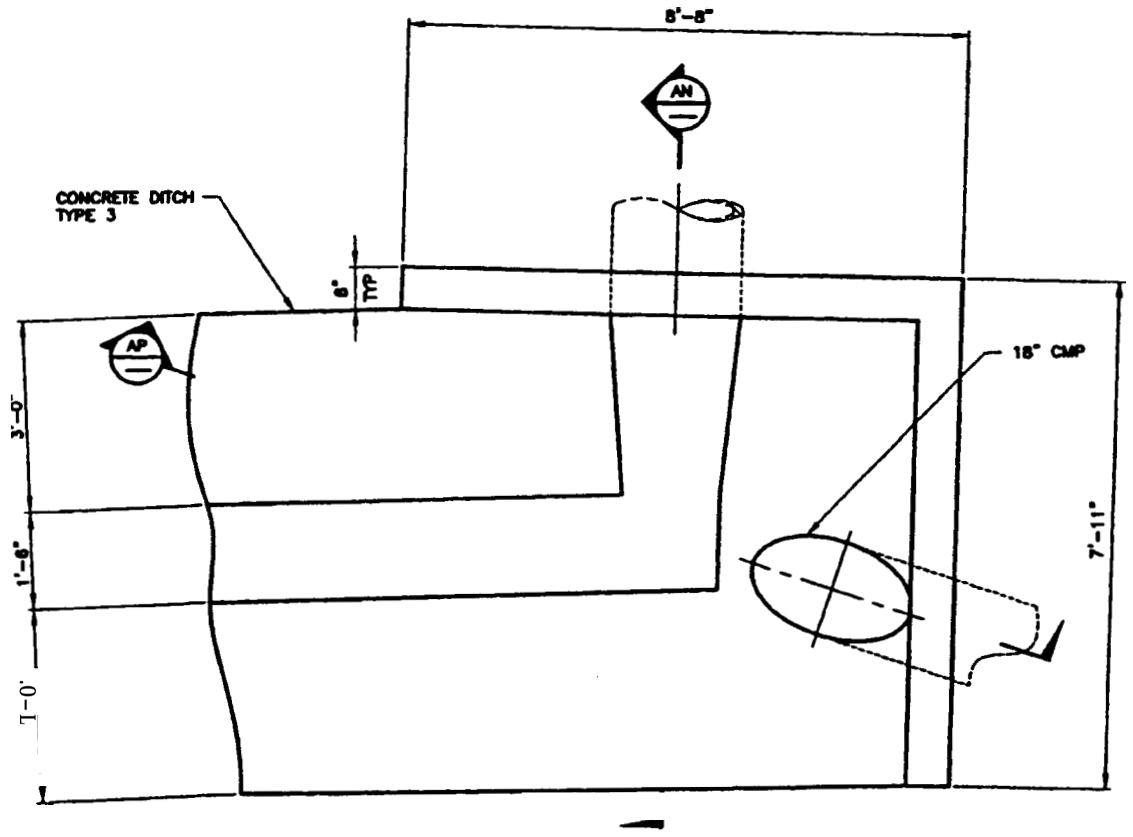

DETAIL (22 / C-7) SCALE: 3/4"=1'-0"

REF
C-8
C-14
C-16

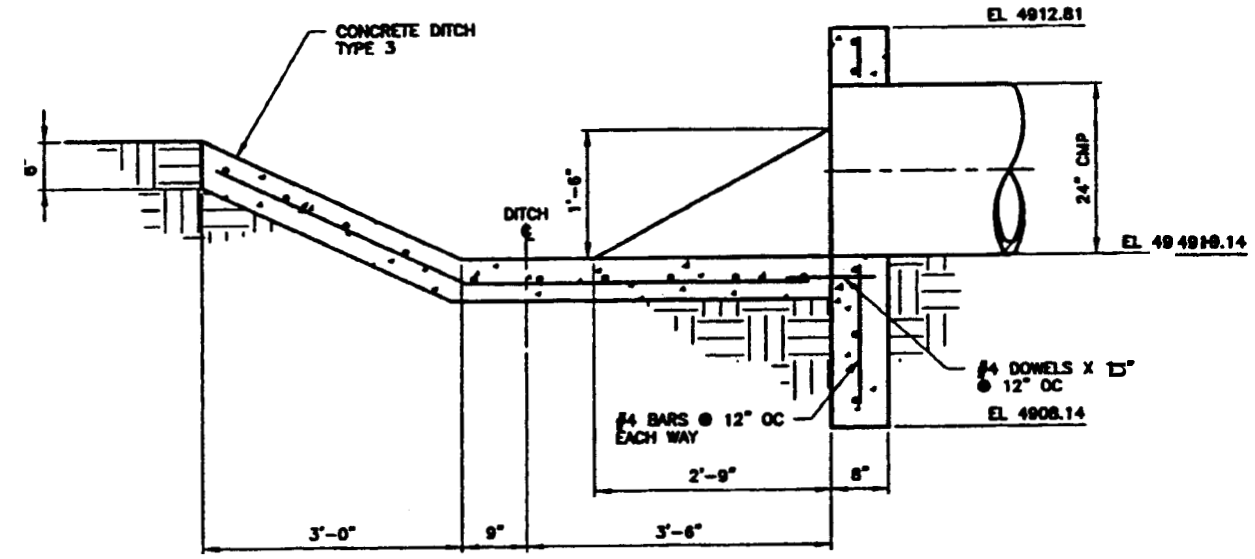

SECTION (AN) SCALE: 1"=1'-0"

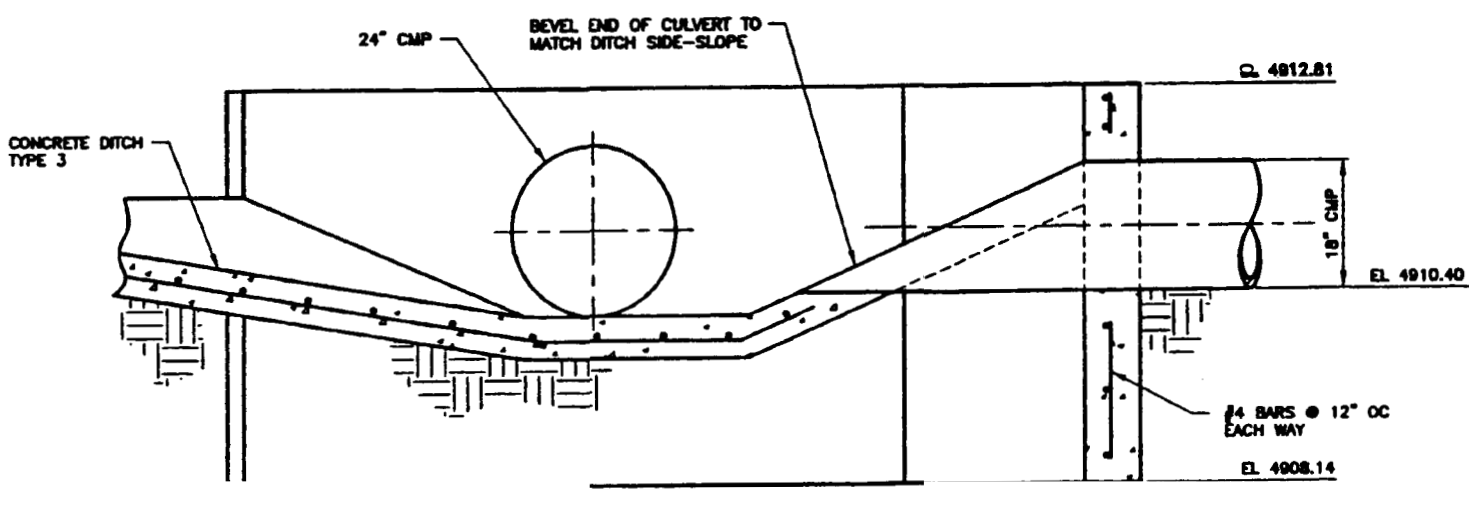

NOTES

1. PROVIDE 3/4" CHAMFER ON ALL EXPOSED CORNERS.

REVISION: 0
ORIGINAL SIGNED BY: KURT D. FRITZ
DATE ORIGINAL SIGNED: 9/18/2000
SEAL NUMBER: 9404
ORIGINAL STORED AT: ERDD DOCUMENT CONTROL

PROFESSIONAL ENGINEER REGISTERED 9404 STATE OF IDAHO KURT D. FRITZ

FOR DRAWING INDEX SEE DRAWING NO.	515158
SCALE: 3/4" = 1'-0"	
SCALE: 1" = 1'-0"	
DESIGN PHASE:	AFC
QUALITY LEVEL:	3
SUBCONTRACT NO.	S00-588051
REGISTER: M.S. KAPREN	
DESIGN: KURT FRITZ	
DRAWN: BOB HERGESHEIMER	
PROJECT NO.	020078
SPEC CODE	
FOR REVISION/APPROVAL SUBMITTAL SEE DAR NO. 68386	
EFFECTIVE DATE:	9/18/2000

INEEL

INEEL
OU 3-13 GROUP 1
TANK FARM INTERIM ACTION
PHASE 1 & 2
HEADWALL DETAIL AND SECTIONS

SIZE	CAGE CODE	INDEX CODE NUMBER AREA	TYPE	CLASS	SEQ	DWG-515197	REV
D		200	0100	62	090		

SCALE: NOTED SHEET C-38

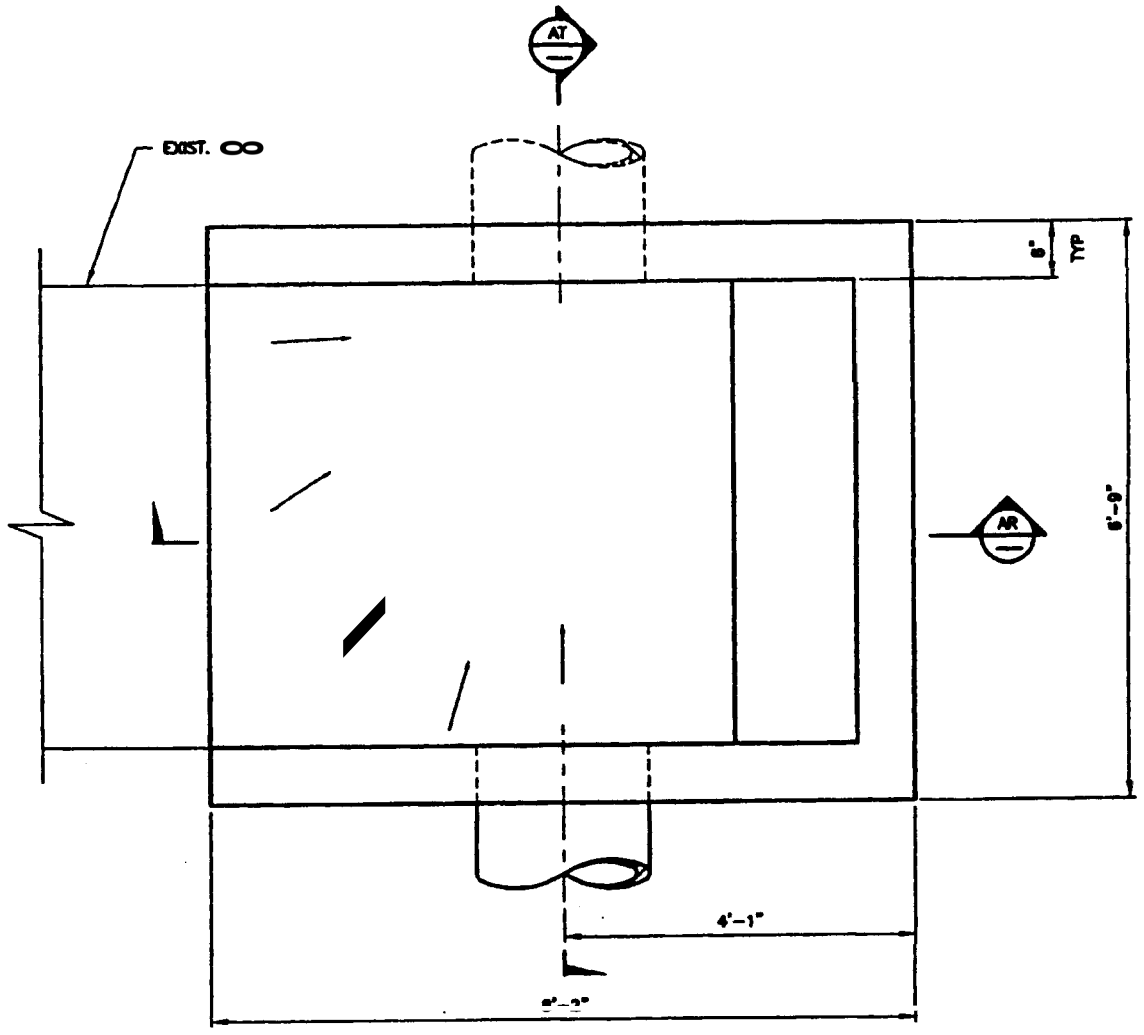

DETAIL (23 / C-7) REF C-14
1"=1'-0"

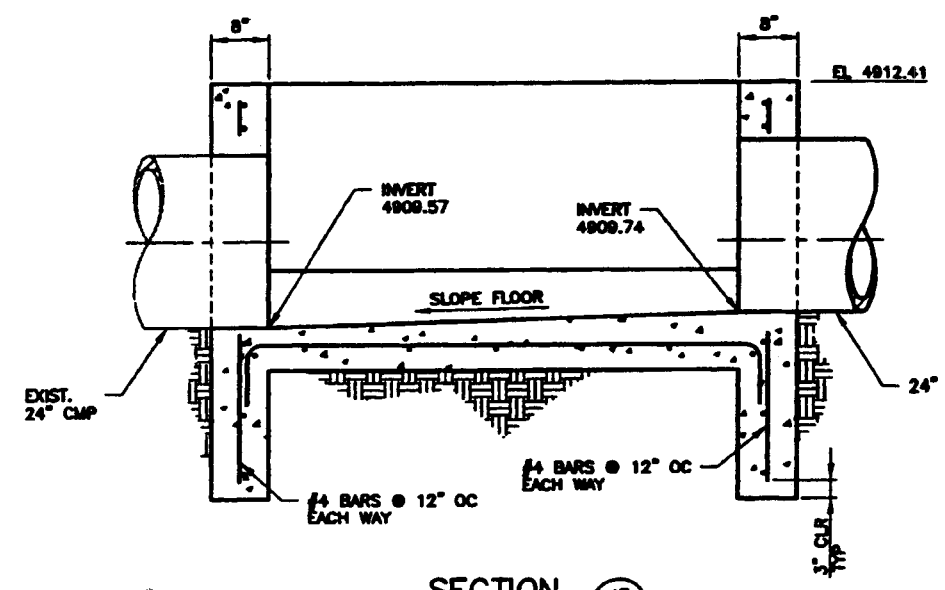

SECTION (AT / –)
SCALE: 1"=1'-0"

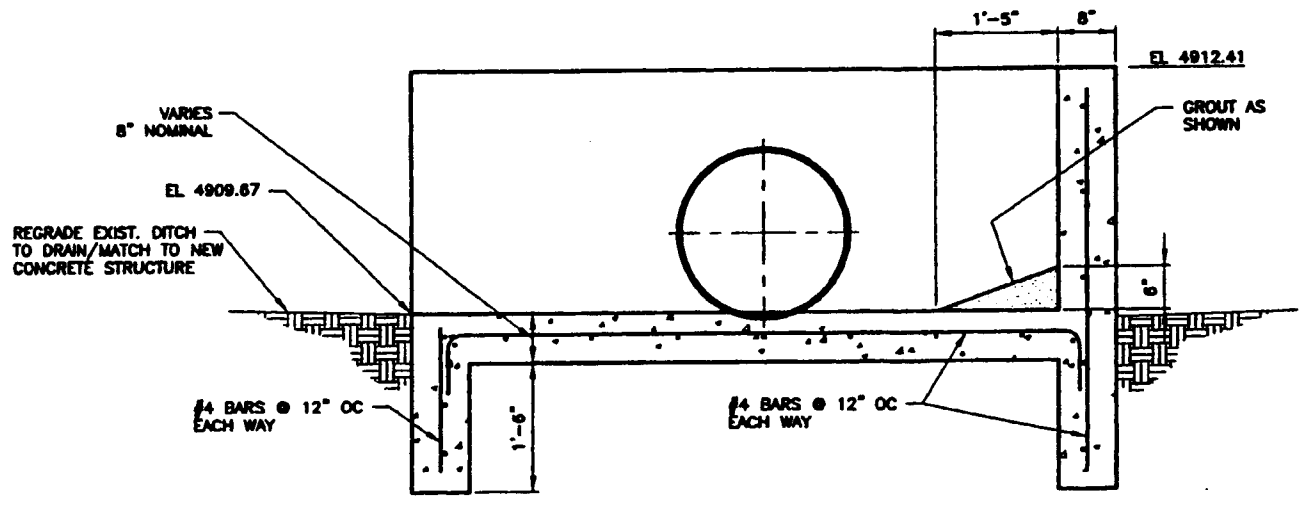

SECTION (AR / –)
SCALE: 1"=1'-0"

NOTES

1. PROVIDE 3/4" CHAMFER ON ALL EXPOSED CORNERS.

REVISION: 0
ORIGINAL SIGNED BY: KURT D. FRITZ
DATE ORIGINAL SIGNED: 9/18/2000
SEAL NUMBER: 9404
ORIGINAL STORED AT: ENDB DOCUMENT CONTROL

PROFESSIONAL ENGINEER REGISTERED 9404 STATE OF IDAHO KURT D. FRITZ

FOR DRAWING INDEX SEE DRAWING NO.	515158
SCALE: 1" = 1'-0"	
DESIGN PHASE:	AFC
QUALITY LEVEL:	3
SUBCONTRACT NO.	S00-588051
REDRAWER:	M.S. KAPTEIN
DESIGN:	KURT FRITZ
DRAWN:	ROB HERGESHEIMER
PROJECT NO.	020878
SPEC CODE	
FOR REVIEW/APPROVAL SIGNATURES SEE BAR NO.	04388
EFFECTIVE DATE:	9/18/2000

INEEL

INEEL
OU 3-13 GROUP 1
TANK FARM INTERIM ACTION
PHASE 1 & 2
HEADWALL DETAIL AND SECTIONS

SIZE	CODE	INDEX CODE NUMBER	DWG-515198	REV
D		200 0100 02 000		
SCALE: 1"=1'-0"			SHEET C-39	

File: C-30.DWG ID: RDH5 Layout Name: D Size
Path: C:\OU3-13-TANKFARM\B-a-30 Saved:9/18/00 - 5:08 P.M.

REVISIONS		
REV	DESCRIPTION	EFFECTIVE DATE

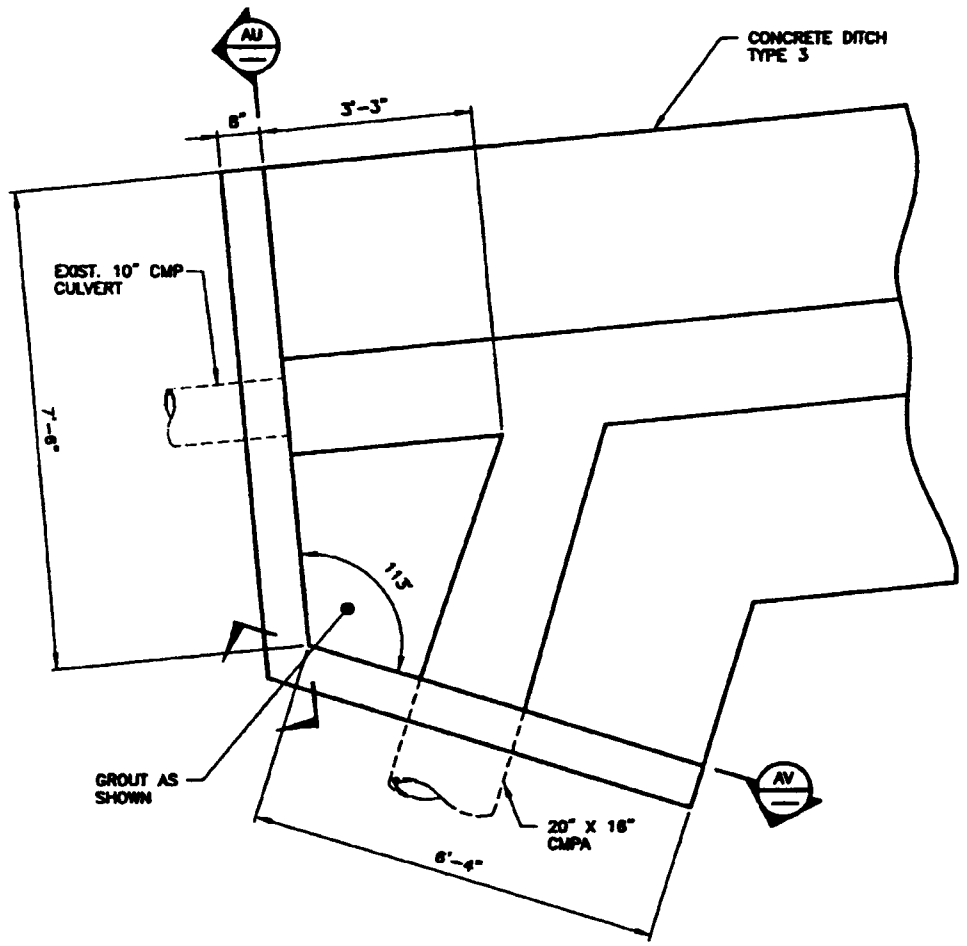

DETAIL (24 / C-9) REF C-18
SCALE: 3/4"=1'-0"

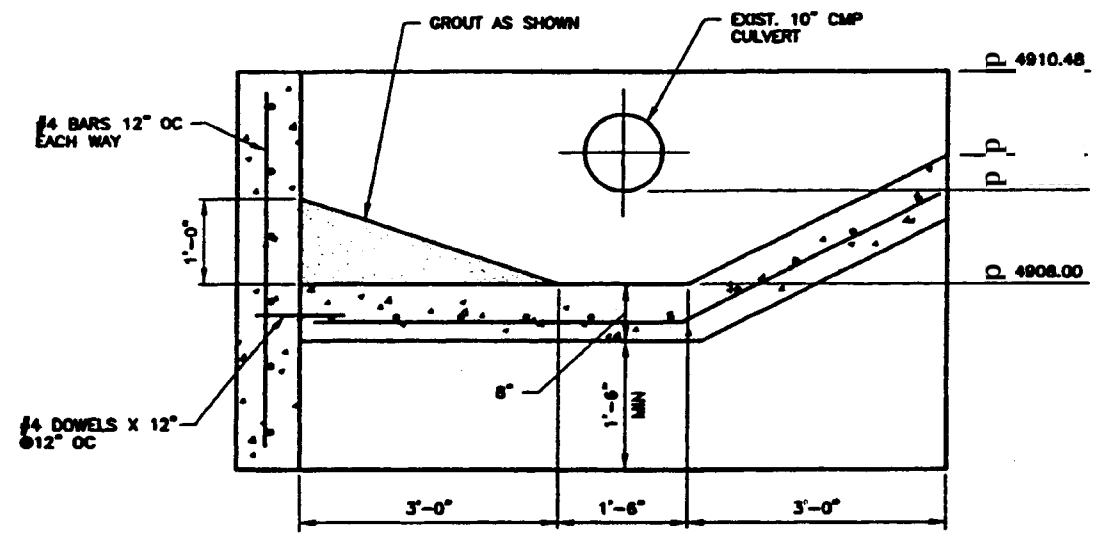

SECTION (AU)
1"=1'-0"

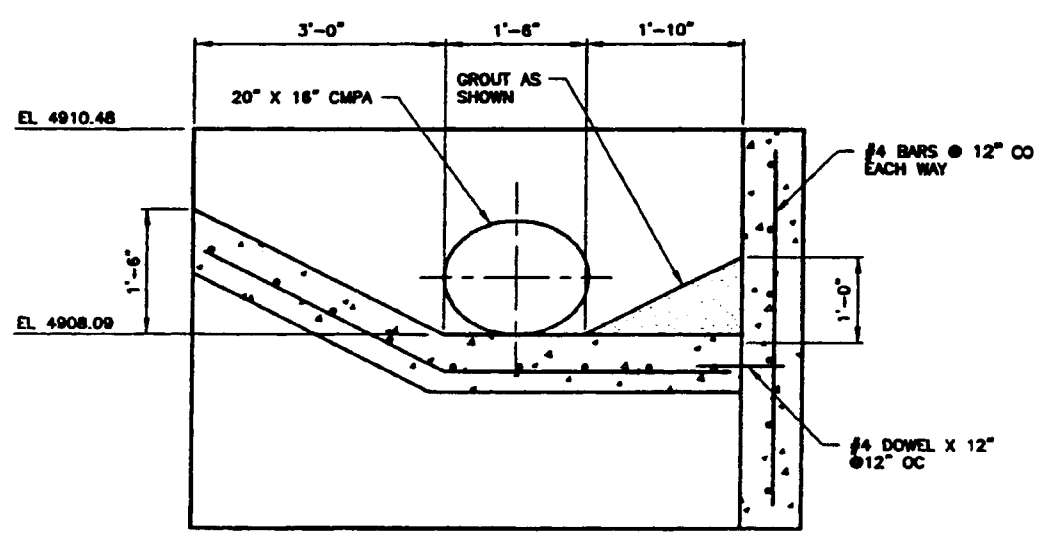

SECTION (AV)
1"=1'-0"

NOTES

1. PROVIDE 3/4" CHAMFER ON ALL EXPOSED CORNERS.

REVISION: 0
ORIGINAL SIGNED BY: KURT D. FRITZ
DATE ORIGINAL SIGNED: 9/18/2000
SEAL NUMBER: 9404
ORIGINAL STORED AT: ERDB DOCUMENT CONTROL

PROFESSIONAL ENGINEER REGISTERED 9404 STATE OF IDAHO KURT D. FRITZ

FOR DRAWING INDEX SEE DRAWING NO. 515158	SUBCONTRACT NO. S00-588051	INEEL
SCALE: 3/4" = 1'-0" / SCALE: 1" = 1'-0"	REGISTER: M.S. KAPTEIN; DESIGN: KURT FRITZ; DRAWN: ROB HERGESHEIMER; PROJECT NO. 020978; SPEC CODE	INEEL OU 3-13 GROUP 1 TANK FARM INTERIM ACTION PHASE 1 & 2 ENDWALL DETAIL AND SECTIONS
DESIGN PHASE: AFC	FOR REVIEW/APPROVAL SIGNATURES; SIZE BAR NO. 08386	SIZE D; CAGE CODE; INDEX CODE NUMBER AREA 200, TYPE 0100, SEQ 02, DWG 090; DWG-515199; REV
QUALITY LEVEL: 3	EFFECTIVE DATE: 9/18/2000	SCALE: NOTED; SHEET C-40

File: C-40.DWG ID: RDHS Path: C:\003-13-TANKFARM\0-a-AU Layout Name: D Size Date:09/18/00 - 3:15 P.M.

REVISIONS		
REV	DESCRIPTION	EFFECTIVE DATE:

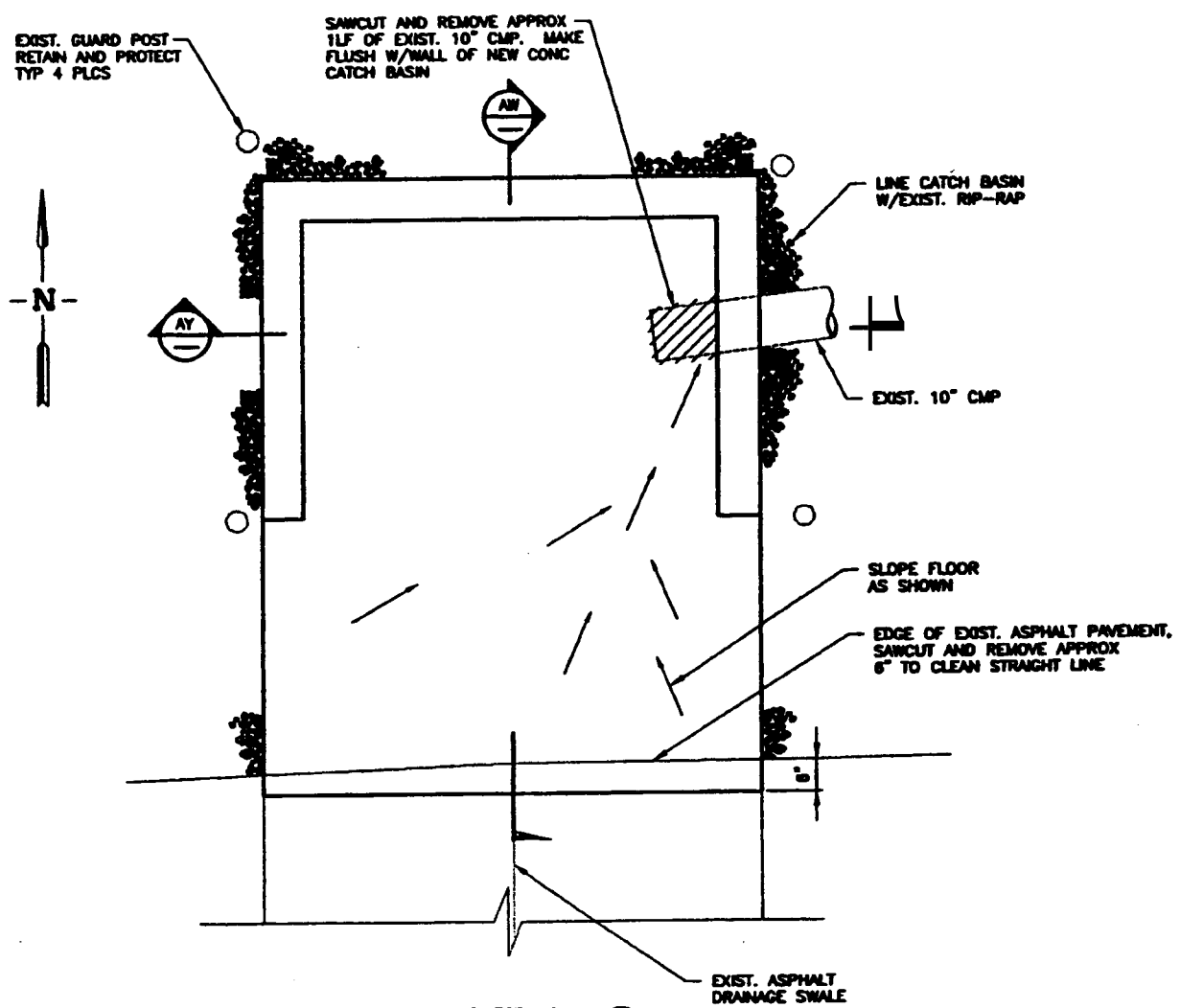

DETAIL (25 / C-1)
SCALE: 3/4"=1'-0"

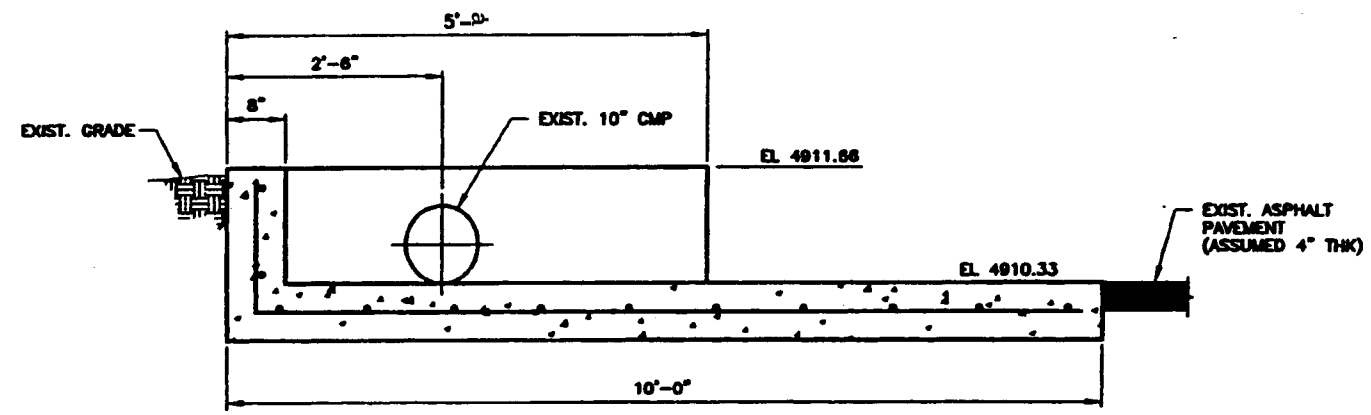

SECTION (AW / -)
SCALE: 1"=1'-0"

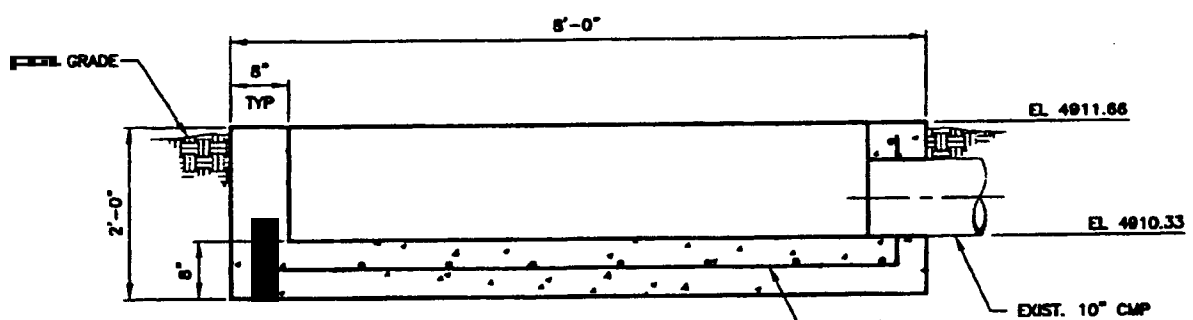

SECTION (AY / -)
SCALE: 1"=1'-0"

LEGEND

- REMOVE OR ABANDON IN PLACE

NOTES

1. PROVIDE 3/4" CHAMFER ON ALL EXPOSED CORNERS.

REVISION: 0
ORIGINAL SIGNED BY: KURT D. FRITZ
DATE ORIGINAL SIGNED: 9/18/2000
SEAL NUMBER: 9404
ORIGINAL STORED AT: EROB DOCUMENT CONTROL

PROFESSIONAL ENGINEER REGISTERED 9404 STATE OF IDAHO KURT D. FRITZ

FOR DRAWING INDEX SEE DRAWING NO.	515156
SCALE: 3/4" = 1'-0"	
SCALE: 1" = 1'-0"	
DESIGN PHASE:	AFC
QUALITY LEVEL:	3
SUBCONTRACT NO.	S00-588051
REVIEWER:	M.S. KAPREM
DESIGN:	KURT FRITZ
DRAWN:	ROB HERGESHEIMER
PROJECT NO.	020978
SPEC CODE	
FOR REVIEW/APPROVAL SIGNATURES SEE DWG NO. 08308	
EFFECTIVE DATE:	9/18/2000

INEEL

INEEL
OU 3-13 GROUP 1
TANK FARM INTERIM ACTION
PHASE 1 & 2
CATCH BASIN DETAIL AND SECTIONS

SIZE	CAGE CODE	DWG CODE				DWG-515200	REV
		AREA	TYPE	FA	DWG		
D		200	0100	62	080		

SCALE: NOTED
SHEET C-41

INT-30-REV 3.0
Layout Name: D Size
Date: 9/18/2000 - 5:17 P.M.
File: C-41.DWG
Path: G:\OU3-13-TANKFARM\B-8-9\

REVISIONS		
REV	DESCRIPTION	EFFECTIVE DATE:

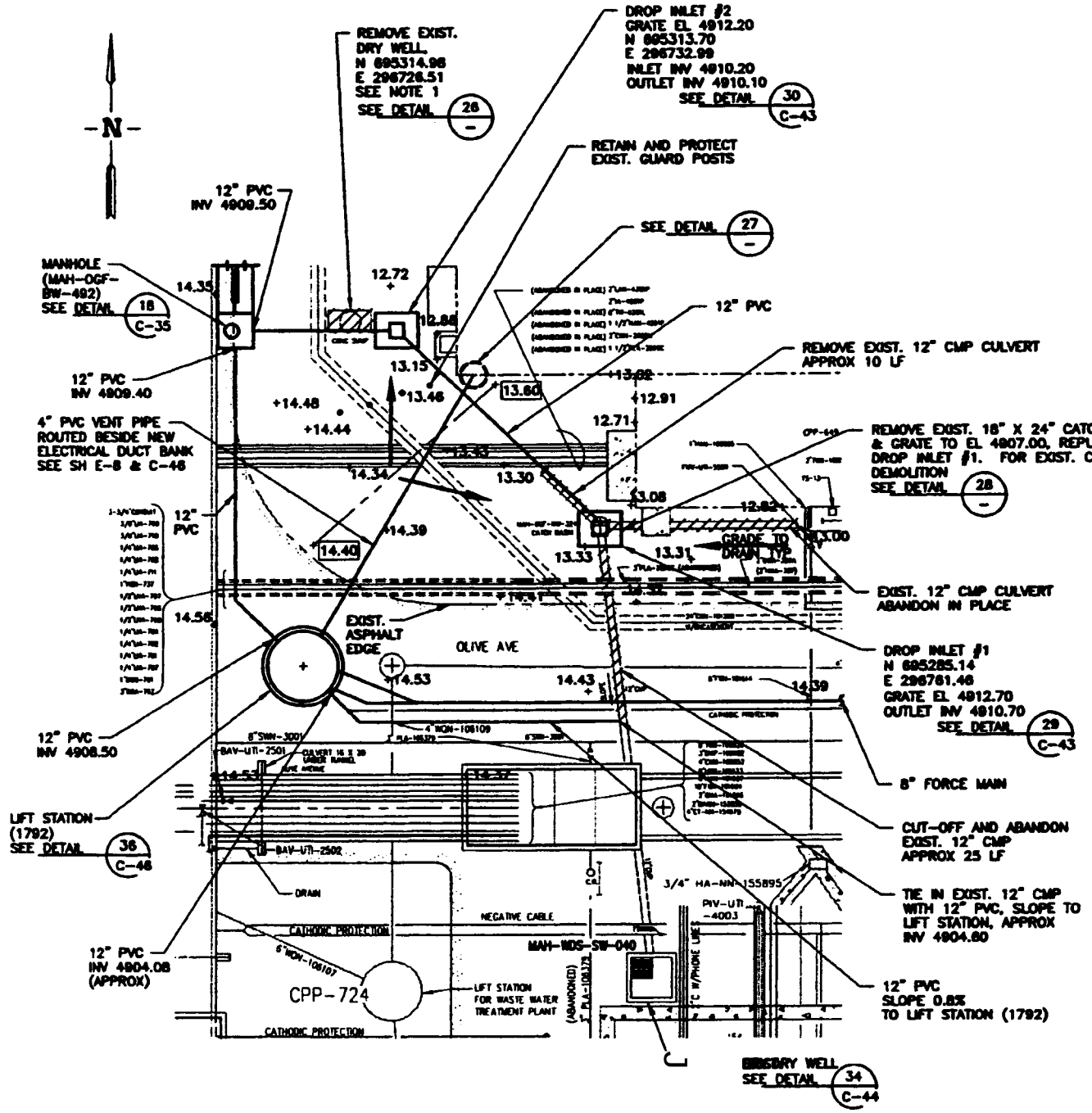

ENLARGED PLAN

SCALE: 1"=10.0' REF C-1 C-3

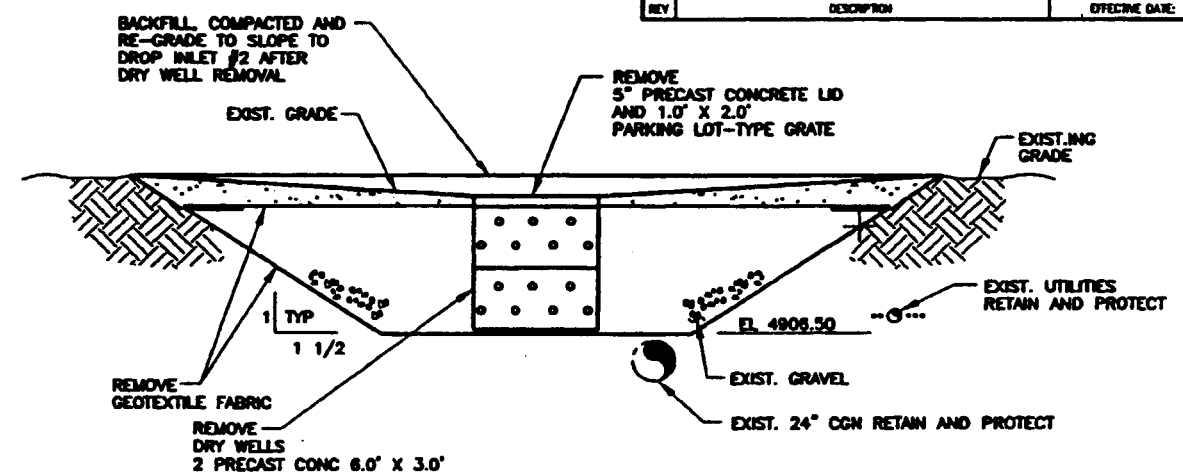

DETAIL 26

SEE NOTE 2
NTS

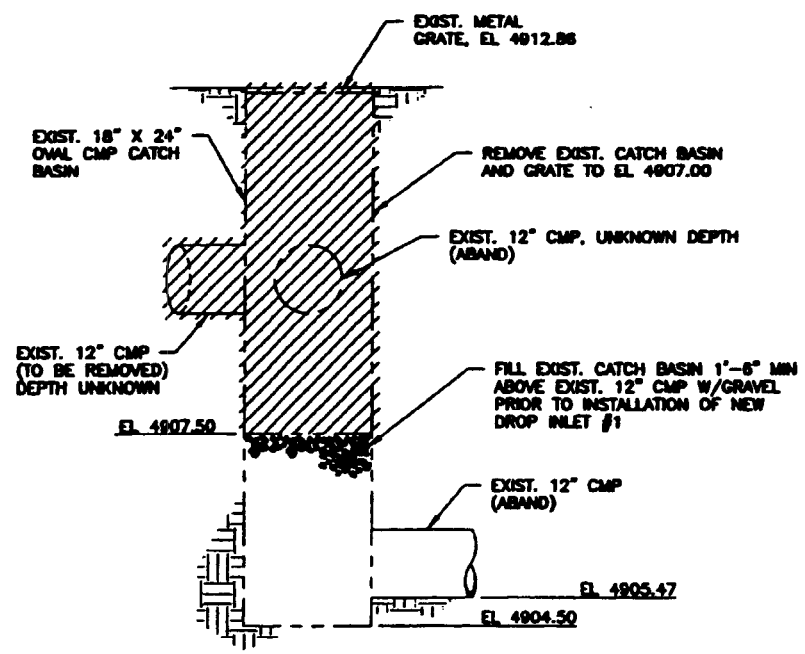

DETAIL 28

SCALE: 3/4"=1'-0"

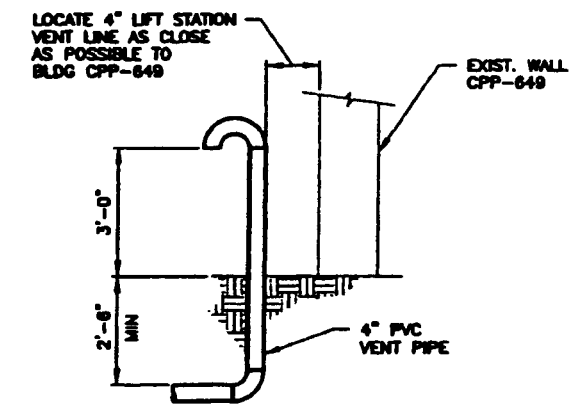

DETAIL 27

SCALE: 1/2"=1'-0" REF C-46

LEGEND

- REMOVE OR ABANDON IN PLACE

NOTES

1. RETAIN AND PROTECT ALL EXIST.ING FOOTINGS, SLABS AND OTHER STRUCTURES, INCLUDING EXIST.ING OVERHEAD 42" DIA DUCT WITH 12.0' CLEARANCE.
2. RETAIN AND PROTECT ALL UNDERGROUND UTILITIES.
3. ADD 4900 TO ALL ELEVATIONS POINTS SHOWN.

REVISION: 0
ORIGINAL SIGNED BY: KURT D. FRITZ
DATE ORIGINAL SIGNED: 9/18/2000
SEAL NUMBER: 9404
ORIGINAL STORED AT: ERDB DOCUMENT CONTROL

PROFESSIONAL ENGINEER REGISTERED 9404 STATE OF IDAHO KURT D. FRITZ

FOR DRAWING INDEX SEE DRAWING NO. 515158	SUBCONTRACT NO. 500-588051
SCALE: 1" = 10.0'	REGISTERED: U.S. KAPTEIN
SCALE: 3/4" = 1'-0"	DESIGN: KURT FRITZ
	DRAWN: ROB HENKESHEIMER
	PROJECT NO. 020978
	SPEC CODE
DESIGN PHASE: AFC	FOR REVIEW/APPROVAL SIGNATURES
QUALITY LEVEL: 3	SEE DWG NO. 68386
	EFFECTIVE DATE: 9/18/2000

INEEL
INEEL
OU 3-13 GROUP 1
TANK FARM INTERIM ACTION
PHASE 1 & 2
ENLARGED PLAN AND DETAILS

SIZE	CADD CODE	INDEX CODE NUMBER				DWG-515201	REV
		AREA	LOC	T.O.	LOC		
D		200	0100	65	090		

SCALE: NOTED
SHEET C-42

File: C-42.DWG
Path: C:\OU3-13-TANKFARM\5-8-99 Baseline\99/00 - 06:43 A.M.
ID: RDHS
Layout Name: 0 Size

REVISIONS		
REV	DESCRIPTION	EFFECTIVE DATE:

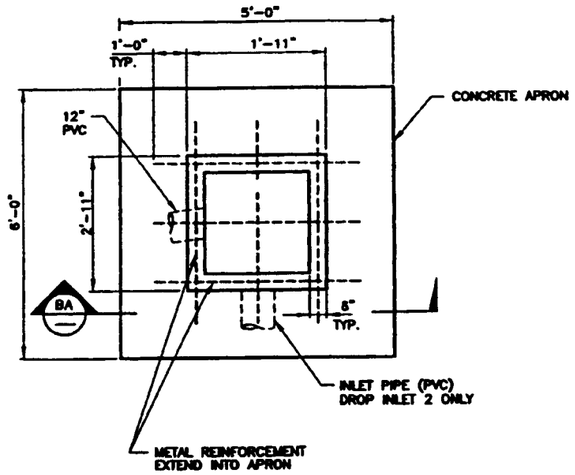

TYP DROP INLET DETAIL (29 e 4 2) (30 C-42)

NTS

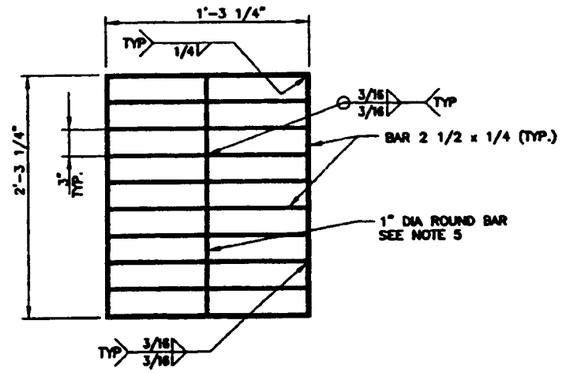

METAL GRATE

NTS

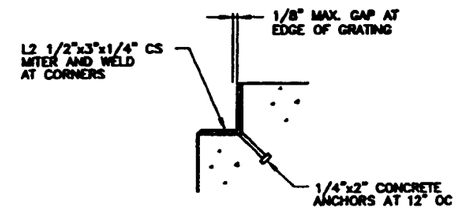

DETAIL (31)

NTS

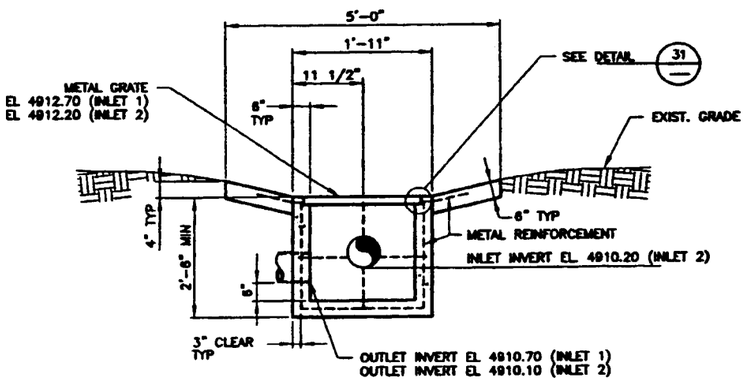

SECTION (BA)

NTS

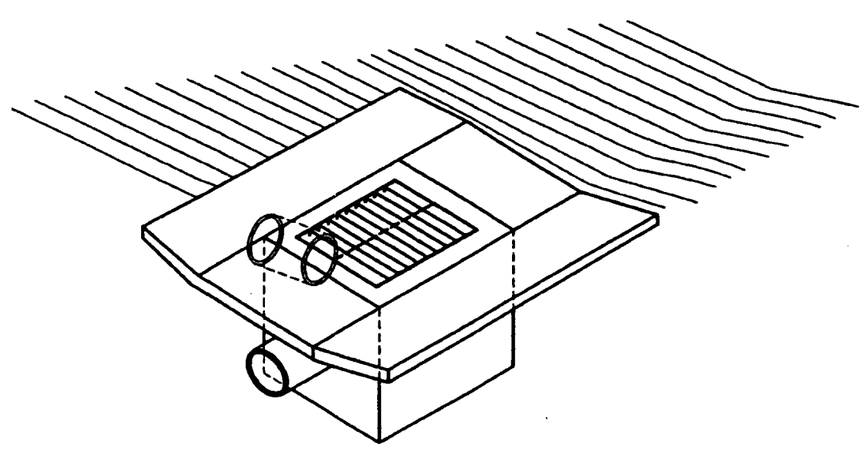

DROP INLET ISOMETRIC

NTS

NOTES

1. TOP OF CONCRETE APRON SHALL BE FLUSH WITH THE TOP OF THE ADJOINING SOIL.
2. ONE INCH SIDE DRAFT ALLOWED FOR FORM REMOVAL.
3. METAL REINFORCEMENT SHALL BE NO. 4 BARS.
4. METAL FOR GRATE SHALL BE ASTM A36 GALV STEEL.
5. 1"ø ROUND BARS SHALL BE INSERTED THROUGH 1 1/16" HOLES DRILLED OR PUNCHED THROUGH CENTERLINE OF FLAT BARS.
6. PRIOR APPROVAL OF SHOP DRAWINGS REQUIRED FOR USE OF PRECAST UNITS.
7. WELDING SHALL BE ELECTRIC ARC WELDING DONE IN ACCORDANCE WITH THE AMERICAN WELDING SOCIETY SPECIFICATIONS D1.1. ALL WELDING SHALL BE ACCOMPLISHED OFF SITE. VISUAL WELD INSPECTION WILL BE REQUIRED BY CONTRACTOR REPRESENTATIVE.

REVISION: 0
ORIGINAL SIGNED BY: KURT D. FRITZ
DATE ORIGINAL SIGNED: 9/18/2000
SEAL NUMBER: 9404
ORIGINAL STORED AT: ERDB DOCUMENT CONTROL

PROFESSIONAL ENGINEER REGISTERED 9404 STATE OF IDAHO KURT D. FRITZ

FOR DRAWING INDEX SEE DRAWING NO. 515158	SUBCONTRACT NO. S00-588051	INEEL
NO SCALE	DESIGNER: M.S. KAPTEIN DESIGN: KURT FRITZ DRAWN: BOB HERGESHEIMER PROJECT NO. 020878 SPEC CODE	INEEL OU 3-13 GROUP 1 TANK FARM INTERIM ACTION PHASE 1 & 2 DRAIN INLET SECTION AND DETAILS
DESIGN PHASE: AFC	FOR REVIEW/APPROVAL SIGNATURES SEE DAR NO. 68386	SIZE D; CAGE CODE; WORK CODE NUMBER: AREA TYPE 200, L.O.I. TYPE 0100, 60, 090; DWG 515202; REV
QUALITY LEVEL: 3	EFFECTIVE DATE: 9/18/2000	SCALE: NONE; SHEET C-43

FILE: C-43.DWG PATH: G:\OU3-13-TANKFARM\0-8-AD
ID: RDHS Layout Name: D Size Date: 09/18/00 - 08:45 A.M.

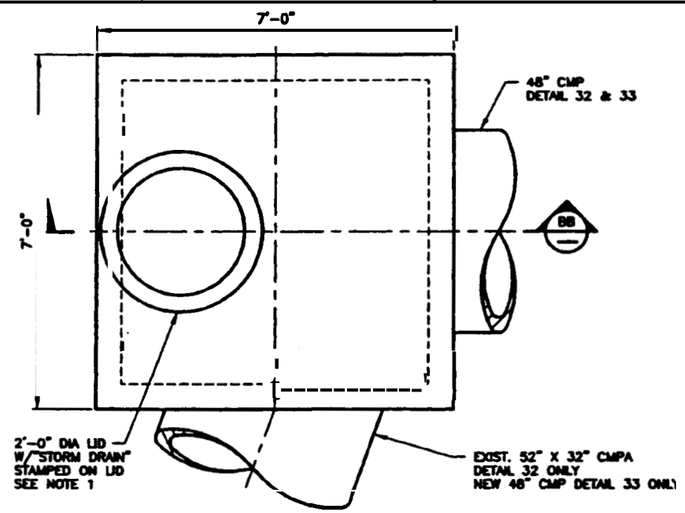

MAH-YDF-BW-491
DETAIL (32 / C-9) REF C-18
SCALE: 3/4"=1'-0"

MAH-CW2-BW-490
DETAIL (32 / C-9) REF C-18
SCALE: 3/4"=1'-0"

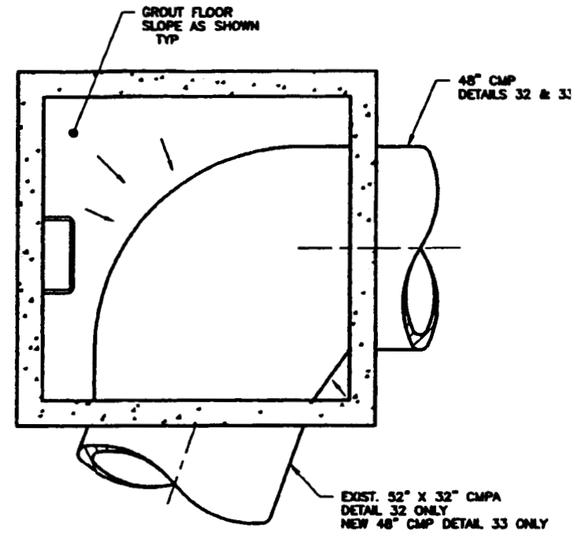

SECTION (BC / B)
SCALE: 3/4"=1'-0"

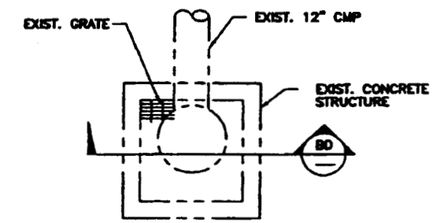

EXIST. DRY WELL DETAIL (C-42)
NTS

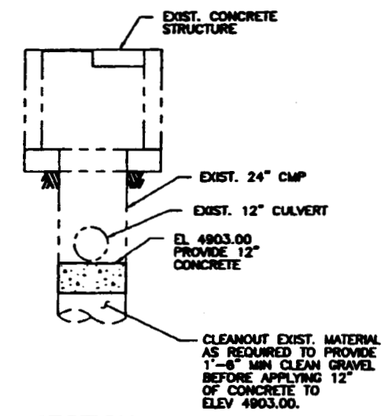

SECTION

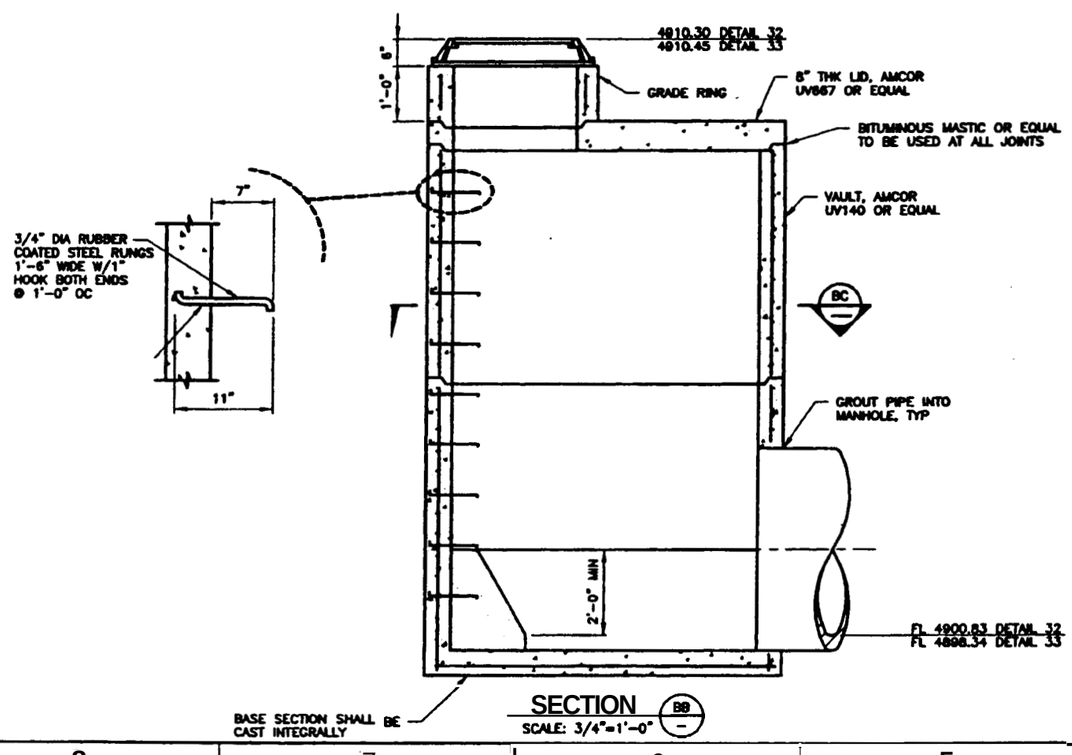

SECTION (BB / -)
SCALE: 3/4"=1'-0"

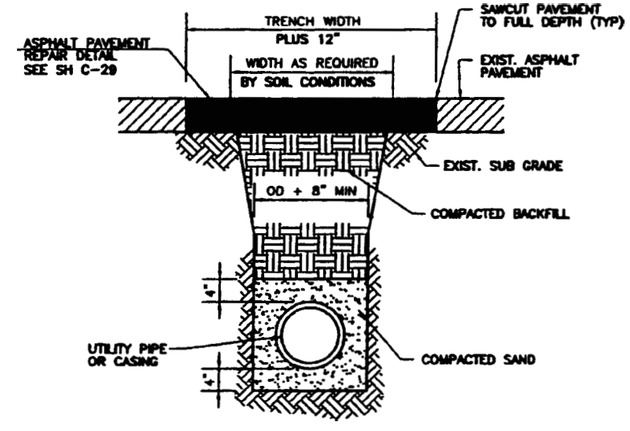

TYP PIPE BEDDING DETAIL
NTS

NOTES

1. MANHOLE LID AND COVER SHALL BE H-20 LOAD RATED.

REVISIONS

DESCRIPTION	EFFECTIVE DATE

REVISION: 0
ORIGINAL SIGNED BY: KURT D. FRITZ
DATE ORIGINAL SIGNED: 9/18/2000
SEAL NUMBER: 9404
ORIGINAL STORED AT: PROB DOCUMENT CONTROL

PROFESSIONAL ENGINEER REGISTERED 9404 STATE OF IDAHO KURT D. FRITZ

FOR DRAWING INDEX SEE DRAWING NO.	515158
SCALE: 1" = 1'-0"	
DESIGN PHASE:	AFC
QUALITY LEVEL:	3
SUBCONTRACT NO.	500-588051
REMESTER:	M.S. KAPTEIN
DESIGN:	KURT FRITZ
DRAWN:	ROB HENGESMEIER
PROJECT NO.	020070
SPEC CODE	
FOR REVIEW/APPROVAL SIGNATURES SEE DWG NO.	68388
EFFECTIVE DATE:	9/18/2000

INEEL
INEEL
OU 3-13 GROUP 1
TANK FARM INTERIM ACTION
PHASE 1 & 2
MANHOLE AND MISC. DETAILS AND SECTIONS

SIZE	CADD CODE	WORK CODE NUMBER	DWG-515203	REV
D		AREA / DISC / F.A. / DISC 200 / 0100 / 62 / 080	SHEET C-44	

SCALE: 1"=1'-0"

File: C-44.DWG
Path: G:\OU3-13-TANKFARM\1-2-AD
ID: RDHS
Layout Name: D Size
Date: 09/18/00 - 08:53 A.M.

REVISIONS		
REV	DESCRIPTION	EFFECTIVE DATE:

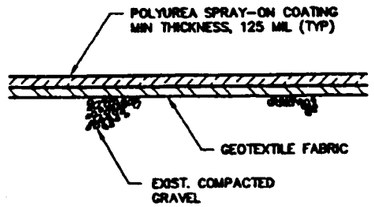

TYPICAL SPRAY COATING DETAIL

NTS
SEE NOTE 1

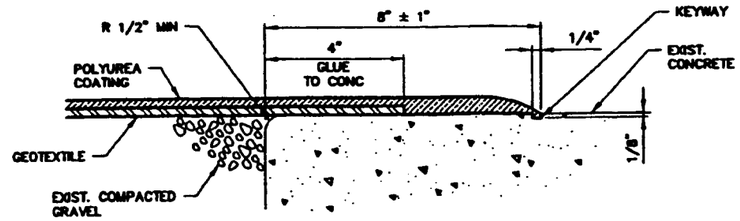

TYPICAL HORIZONTAL SPRAY ON COATING TO CONCRETE TERMINATION DETAIL

SEE NOTE 2
NTS

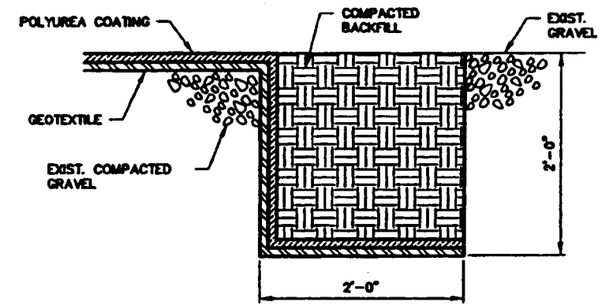

TYPICAL HORIZONTAL GRAVEL TERMINATION DETAIL

NTS

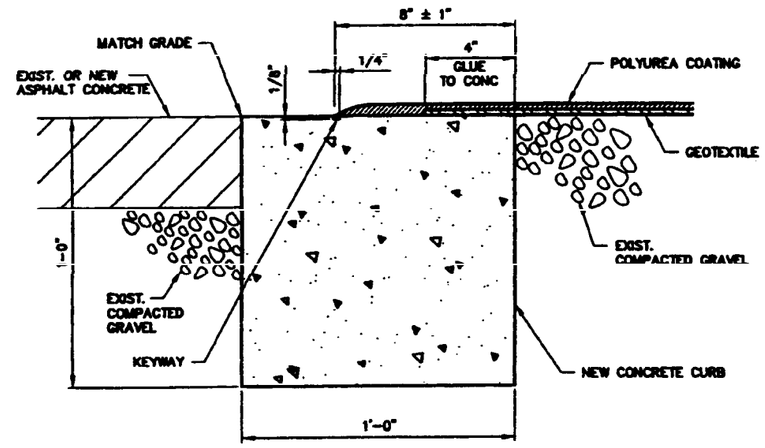

TYPICAL SPRAY ON COATING TO ASPHALT TERMINATION DETAIL

SEE NOTE 2
NTS

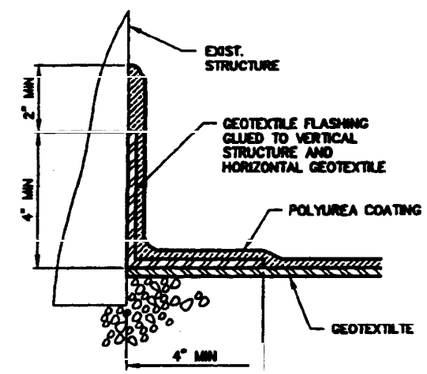

TYPICAL VERTICAL SPRAY ON COATING MULTI PURPOSE TERMINATION DETAIL

(METAL, WOOD AND CONCRETE)
SEE NOTE 3
NTS

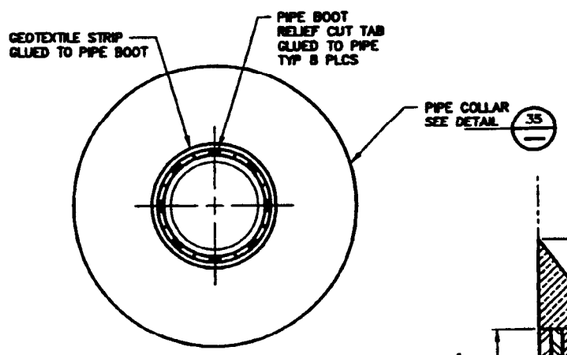

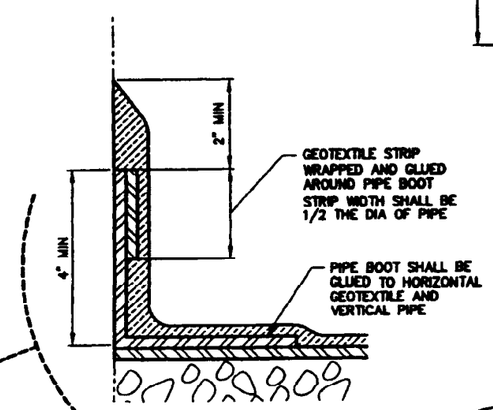

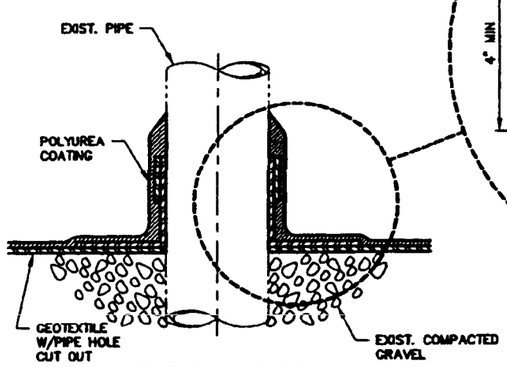

TYPICAL PIPE PENETRATION DETAIL

SEE NOTE 4
NTS

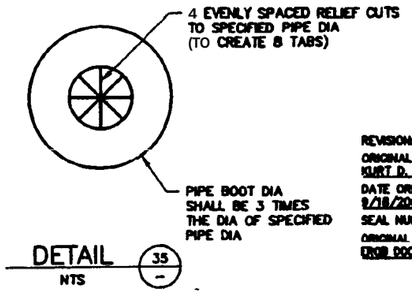

DETAIL 35
NTS

NOTES

1. COATING DETAILS ARE INTENDED TO SHOW A MINIMUM ACCEPTABLE LEVEL OF INSTALLATION, BUT ARE INTENDED TO SUPERSEDE ANY MANUFACTURER SPECIFIC INSTALLATION REQUIREMENTS.
2. CONCRETE SUBTRATE SHALL BE PREPARED AND PRIMED PER MANUFACTURES INSTRUCTIONS.
3. VERTICAL STRUCTURE SHALL BE PREPARED AND PRIMED PER MANUFACTURES INSTRUCTIONS
4. PIPE SHALL BE PREPARED AND PRIMED PER MANUFACTURES INSTRUCTIONS

REVISION: D
ORIGINAL SIGNED BY: KURT D. FRITZ
DATE ORIGINAL SIGNED: 9/18/2000
SEAL NUMBER: 9404
ORIGINAL STORED AT: CROB DOCUMENT CONTROL

PROFESSIONAL ENGINEER REGISTERED 9404 STATE OF IDAHO KURT D. FRITZ

PWR DRAWING INDEX SEE DRAWING NO. 515158	SUBCONTRACT NO. 500-588051	INEEL
NO SCALE	REVIEWED: M.S. KAPTEIN DESIGN: JESSIN HURST DRAWN: ROB HERGESHEIMER PROJECT NO. 020978 SPEC CODE	INEEL OU 3-13 GROUP 1 TANK FARM INTERIM ACTION PHASE 1 & 2 MISC. DETAILS
DESIGN PHASE: AFC	PWR REVIEW/APPROVAL SIGNATURES SEE DWG NO. 08388	REV D; CLASS CODE; INDEX CODE: NNA 1 CODE, 1 CODE, 200, 0100, 00, 000; DWG-515204; REV
QUALITY LEVEL: 3	EFFECTIVE DATE: 9/18/2000	SCALE: NONE; SHEET C-45

REVISIONS		
REV	DESCRIPTION	EFFECTIVE DATE:

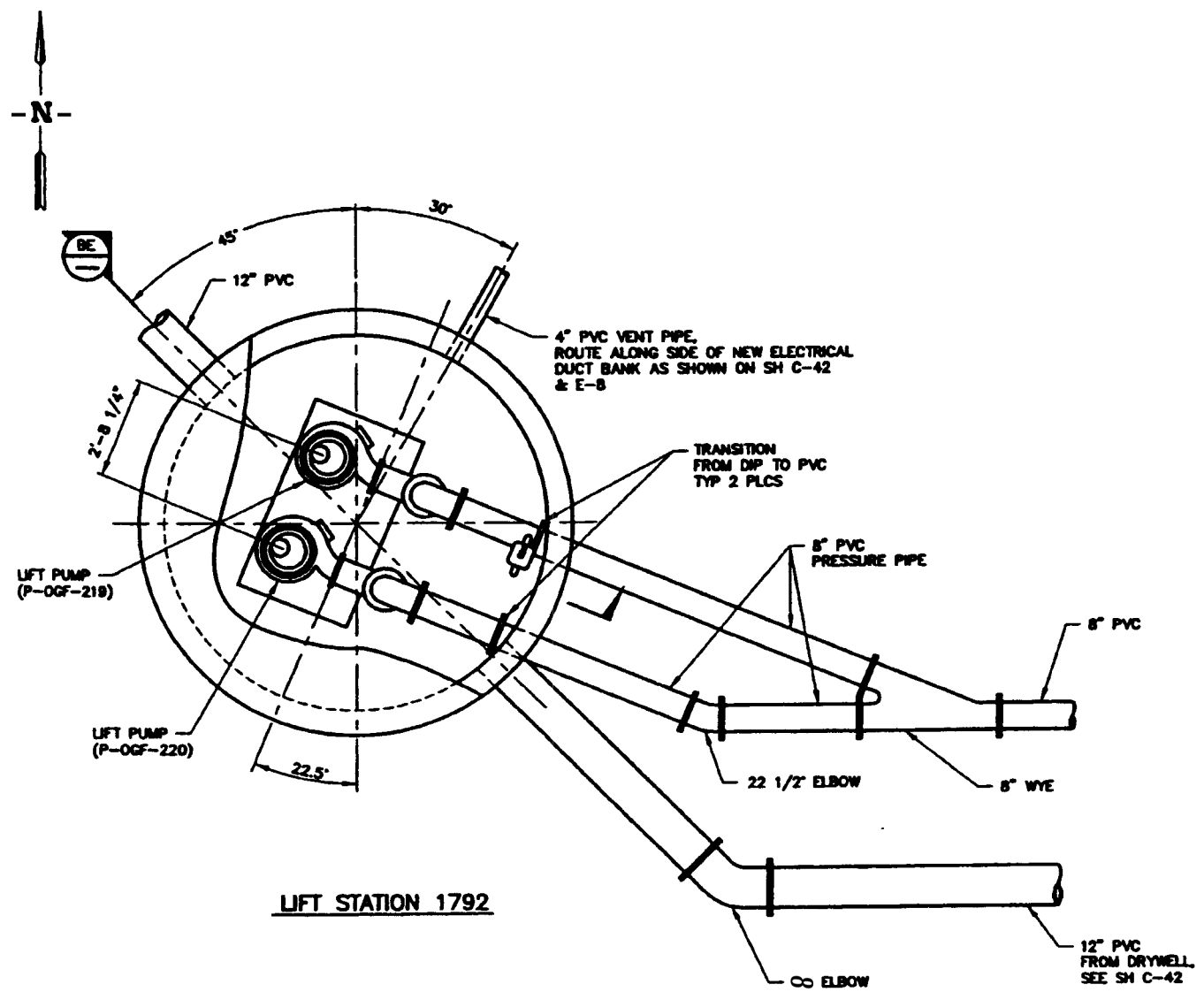

LIFT STATION 1792

DETAIL (36 / C-3)
SCALE: 1/2"=1'-0"

REF
C-4
C-11
C-12
C-42

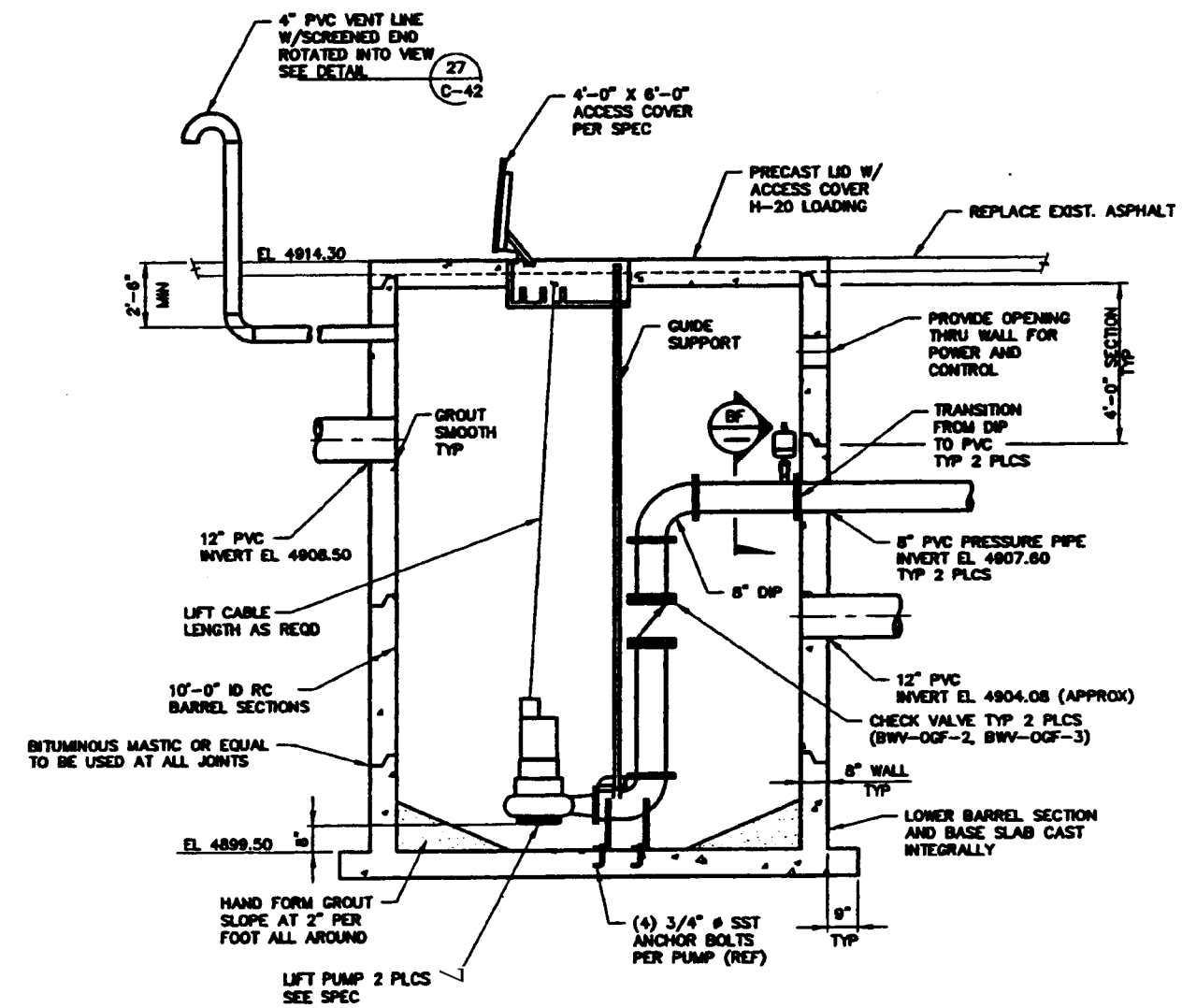

SECTION (BE)
SCALE: 1/2"=1'-0"

LIFT STATION 1792 CONTROL SETTINGS

HIGH LEVEL ALARM	EL 4909.00
PUMPS ON (BOTH)	EL 4908.00
FIRST PUMP ON	EL 4907.00
PUMPS OFF (BOTH)	EL 4901.00

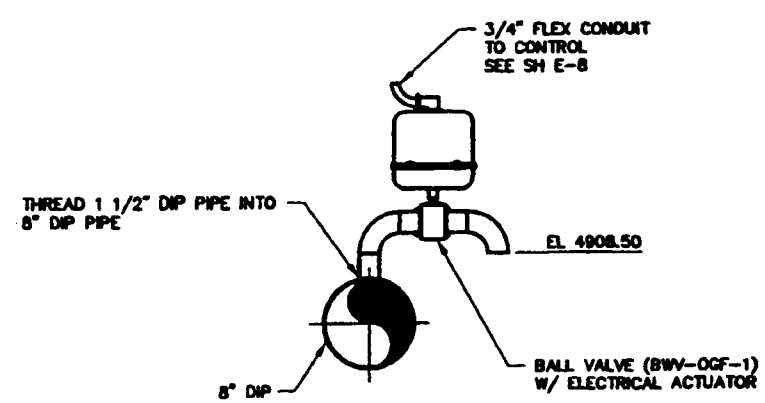

SECTION (BF)
SCALE: 1 1/2"=1'-0"

NOTES

1. PUMPS, GUIDE RAILS, ANCHOR BOLTS AND ACCESS COVER SHALL BE LOCATED WITH RESPECT TO EACH OTHER AS PER MANUFACTURER'S INSTALLATION INSTRUCTIONS AND DRAWINGS.

REVISION: 0
ORIGINAL SIGNED BY: KURT D. FRITZ
DATE ORIGINAL SIGNED: 9/18/2000
SEAL NUMBER: 9404
ORIGINAL STORED AT: EROB DOCUMENT CONTROL

PROFESSIONAL ENGINEER REGISTERED 9404 STATE OF IDAHO KURT D. FRITZ

FOR DRAWING INDEX SEE DRAWING NO.	515158
SCALE: 1/2" = 1'-0"	
SCALE: 1 1/2" = 1'-0"	
DESIGN PHASE:	AFC
QUALITY LEVEL:	3
SUBCONTRACT NO.	S00-588051
MANAGER:	M.S. KAPTEIN
DESIGN:	KURT FRITZ
DRAWN:	ROB HERGESHEIMER
PROJECT NO.	020078
SPEC CODE	
FOR REVIEW/APPROVAL SIGNATURES SEE BAR NO. 68388	
EFFECTIVE DATE:	9/18/2000

INEEL
LOCKHEED MARTIN IDAHO, LLC

INEEL
OU 3-13 GROUP 1
TANK FARM INTERIM ACTION
PHASE 1 & 2
LIFT STATION SECTIONS AND DETAIL

SIZE	CADE CODE	INDEX CODE NUMBER				DWG-	REV
		AREA	TYPE	S.	SEQ	515205	
D		200	1792	60	000		

SCALE: NOTED
SHEET C-46

File: C-46.DWG Path: G:\OU3-13-TANKFARM\E-8 Layout Name: Layout1 Date: 09/08/00 - 08:57 A.M.

REVISIONS		
REV	DESCRIPTION	EFFECTIVE DATE

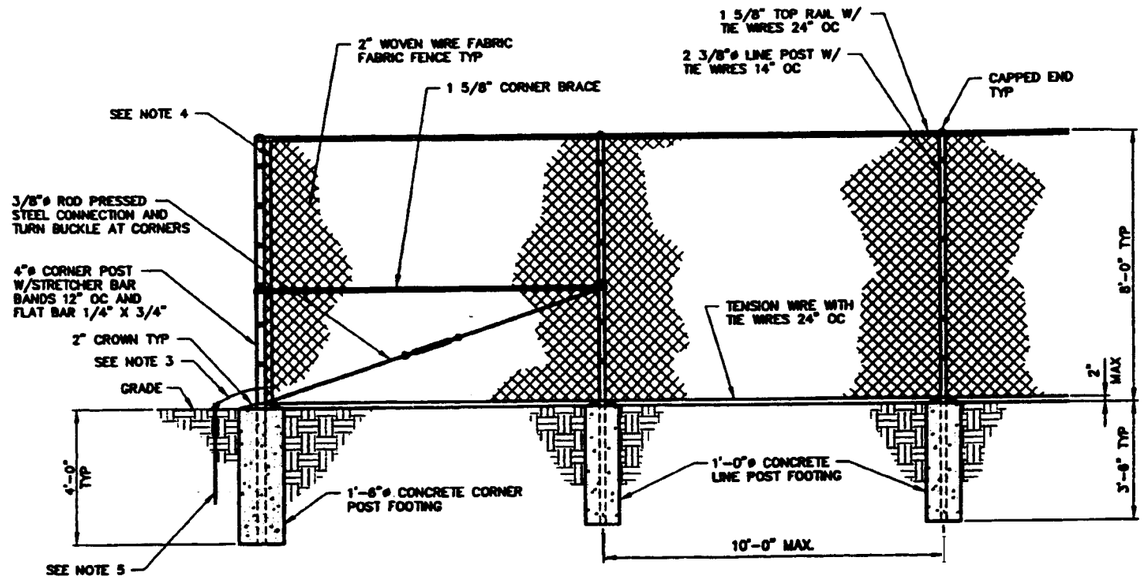

TYPICAL FENCE DETAIL

SCALE: 1/2"=1'-0"

REF C-3 C-a C-19

NOTES

1. ALL FOOTINGS SHALL BE CLASS 30 CONCRETE 3000 PSI AT 28 DAYS. FOOTINGS SHALL BE CYLINDRICAL OF THE DIAMETER INDICATED.
2. ALL POSTS, RAILS AND FITTINGS SHALL BE GALVANIZED BY HOT DIP PROCESS, AND COATED WITH ZINC PHOSPHATE, AN EPOXY BASE, AND A POLYESTER NO-MAR FINISH.
3. NO. 2/0 BARE COPPER JUMPER.
4. NO. 6 BARE COPPER RISER INTERWOVEN IN FABRIC, LOCATE AT POSTS PER GROUNDING NOTE 6.
5. 5/8" X 10.0' COPPER CLAD GROUND ROD INSTALLED AT CORNER POSTS AND AT 30.0' OR EVERY THIRD POST INTERVALS ALONG FENCE. AS REQUIRED, ASPHALT PAVING SHALL BE BROKEN OUT TO ALLOW INSTALLATION OF GROUND RODS AND BE PATCHED AFTER INSTALLATION IS COMPLETE.
6. FENCE TO BE GROUNDED AT EVERY THIRD POST AND THE CORNER POST. ABOVE GROUND CONNECTIONS TO BE MADE WITH CONNECTORS OR STRAPS. UNDERGROUND CONNECTIONS TO BE BRAZED, FUSION WELDED (CADWELDED) OR CONNECTED WITH BURNDY CLAMPS.
7. FILL CORNER POSTS AND GATE POSTS WITH CONCRETE PRIOR TO CAPPING.

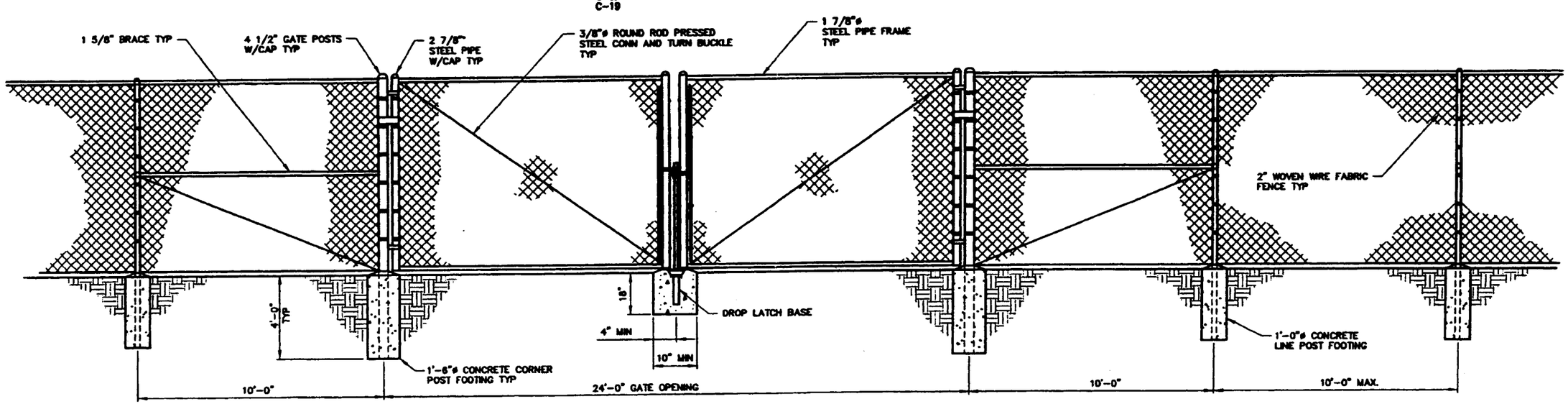

TYPICAL DOUBLE GATE DETAIL

SCALE: 1/2"=1'-0"

REF C-19

REVISION: 0
ORIGINAL SIGNED BY: KURT D. FRITZ
DATE ORIGINAL SIGNED: 9/18/2000
SEAL NUMBER: 9404
ORIGINAL STORED AT: EDMS DOCUMENT CONTROL

PROFESSIONAL ENGINEER REGISTERED 9404 STATE OF IDAHO KURT D. FRITZ

FOR DRAWING INDEX SEE DRAWING NO. 515158	SUBCONTRACT NO. S00-588051	INEEL
SCALE: 1/2" = 1'-0"	REDMESTER: M.S. KAPTEIN DESIGN: KURT FRITZ DRAWN: ROB HENGESHEMER PROJECT NO. 020878 SPEC CODE	INEEL OU 3-13 GROUP 1 TANK FARM INTERIM ACTION PHASE 1 & 2 FENCING DETAILS
DESIGN PHASE: AFC QUALITY LEVEL: 3	FOR REVIEW/APPROVAL SIGNATURES SEE DWG NO. 06366 EFFECTIVE DATE: 9/18/2000	SIZE D; CAGE CODE; DWG-515206; REV; SCALE: 1/2"=1'-0"; SHEET C-47

File: C-47.DWG Path: G:\OU3-13-TANKFARM\C-a-DD Layout Name: Layout1 Plotted: 09/18/00 - 06:59 A.M.

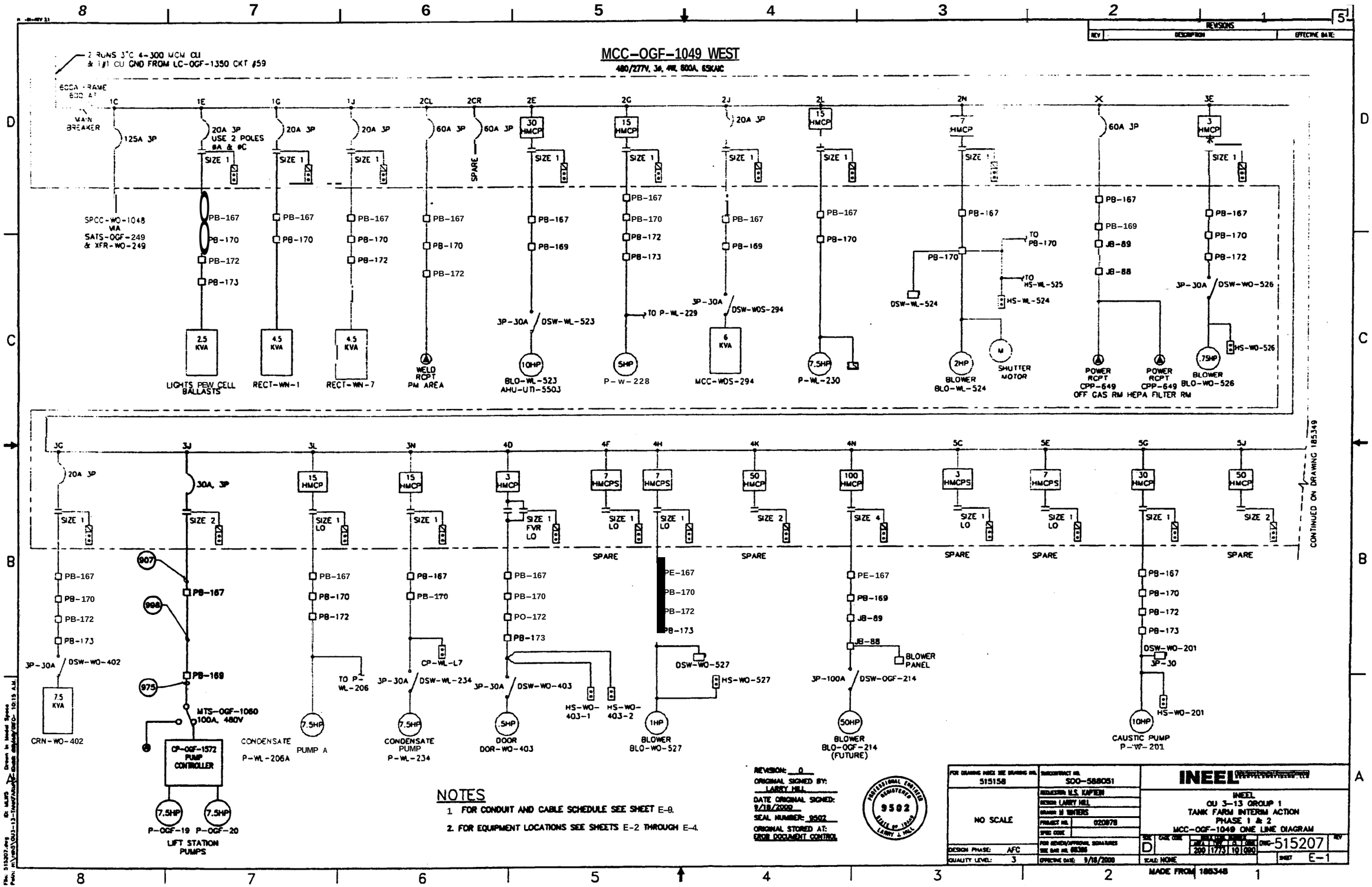

NOTES

1. FOR CONDUIT AND CABLE SCHEDULE SEE SHEET E-9.
2. FOR EQUIPMENT LOCATIONS SEE SHEETS E-2 THROUGH E-4.

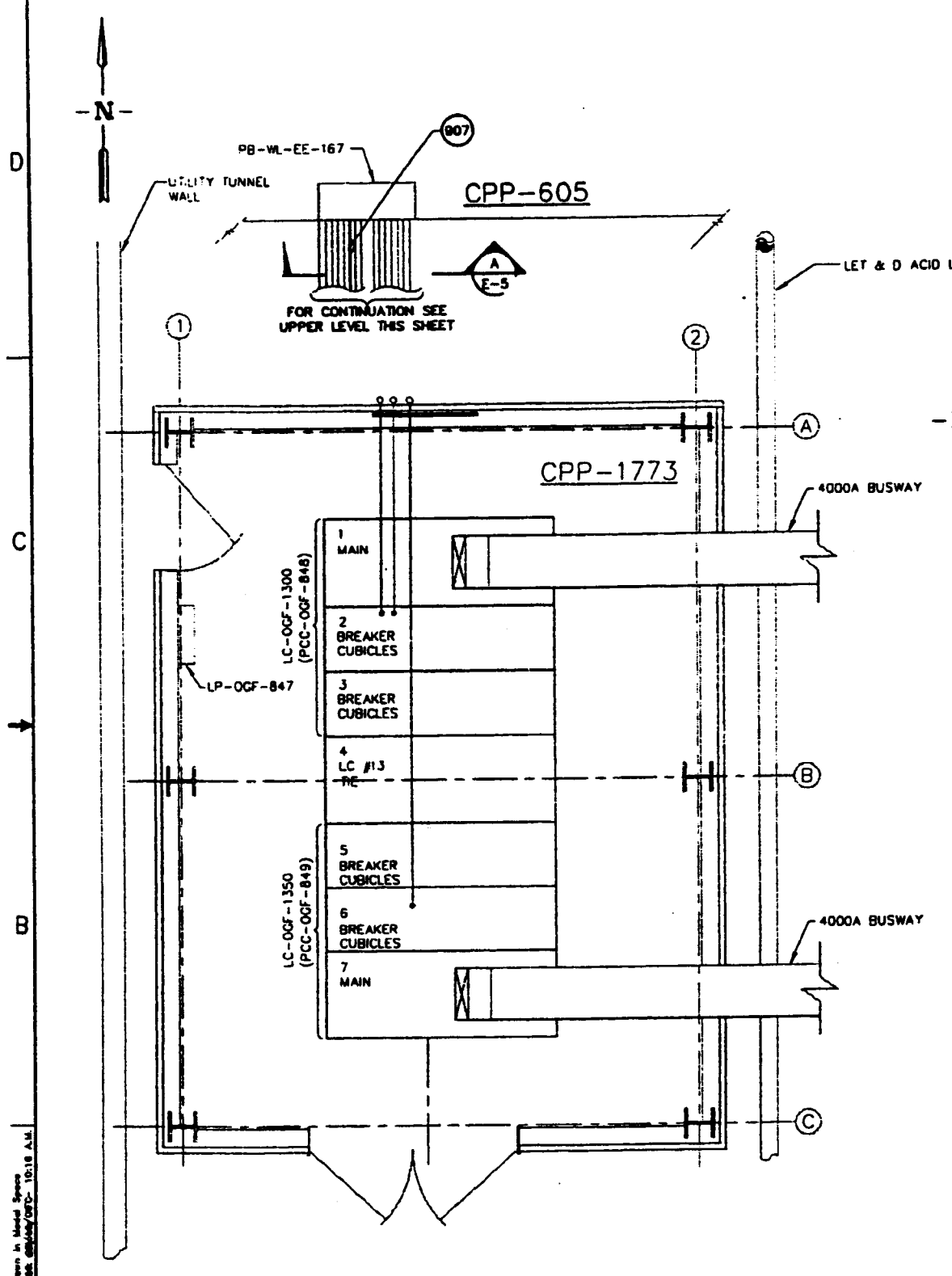

CPP-1773 LOWER LEVEL POWER PLAN

SCALE: 1/2" = 1'-0" EL 4914'-0"

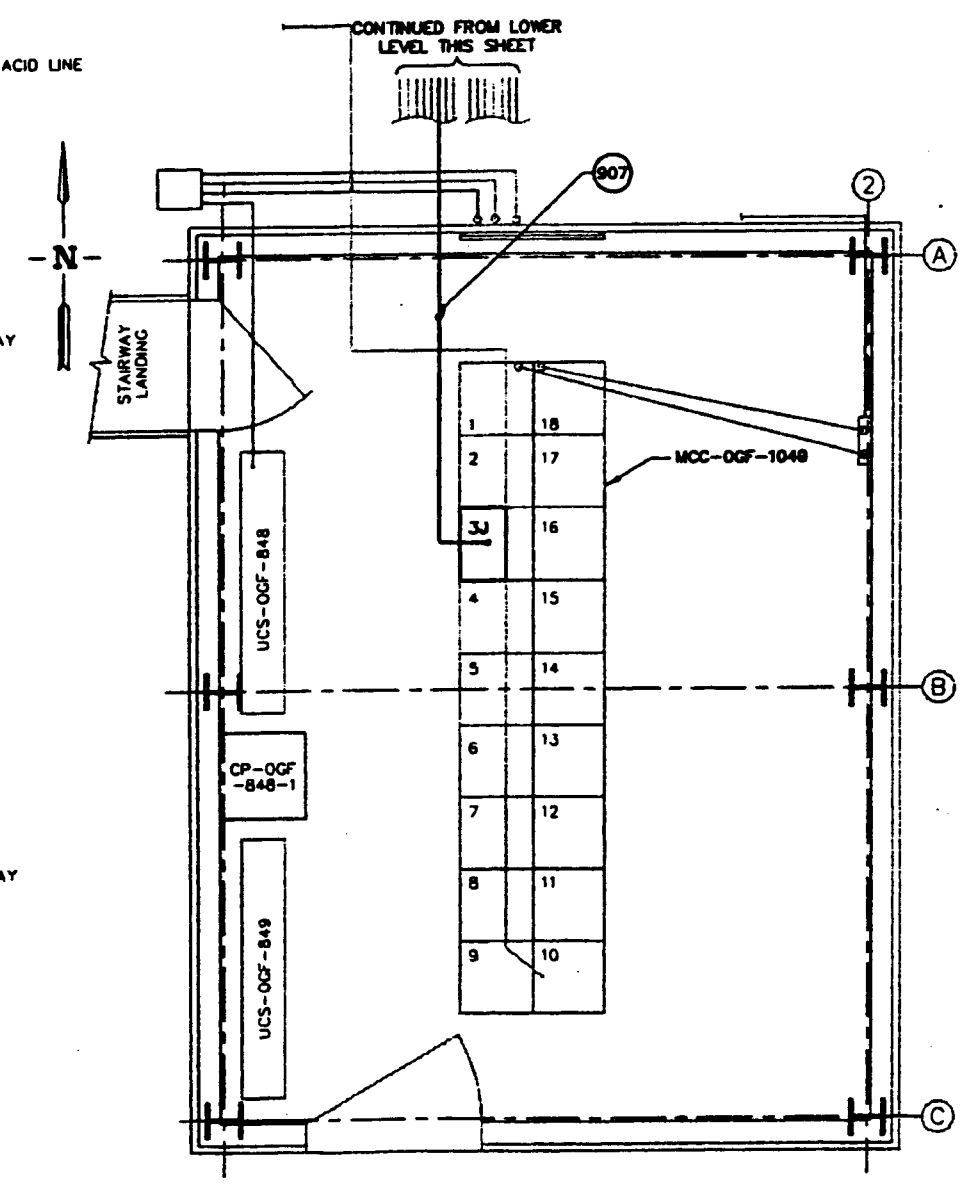

CPP-1773 UPPER LEVEL POWER PLAN

SCALE: 1/2" = 1'-0" EL 4928'-10"

NOTES

1. FOR CONDUIT & WIRE SCHEDULE SEE DRAWING E-9.

REVISION: 0
ORIGINAL SIGNED BY: LARRY HILL
DATE ORIGINAL SIGNED: 9/18/2000
SEAL NUMBER: 9502
ORIGINAL STORED AT: EDMS DOCUMENT CONTROL

PROFESSIONAL ENGINEER REGISTERED 9502 STATE OF IDAHO LARRY J. HILL

FOR DRAWING INDEX SEE DRAWING NO.	515158
SUBCONTRACT NO.	SOO-588051
DESIGNER	M.S. KAPTEIN
DESIGN	LARRY HILL
DRAWN	M WATERS
PROJECT NO.	020878
SPEC CODE	
FOR REVIEW/APPROVAL SIGNATURES SEE DAR NO. 66386	
DESIGN PHASE	AFC
QUALITY LEVEL	3
EFFECTIVE DATE	9/18/2000

SCALE 1/2" = 1'-0"

INDEX CODE NUMBER: AREA 200, TYPE D605, SQ 10, SEQ 090

INEEL

INEEL
OU 3-13 GROUP 1
TANK FARM INTERIM ACTION
PHASE 1 & 2
CPP-1773 FLOOR PLAN

SIZE	CODE CODE	INDEX CODE NUMBER				DWG-515208	REV
		AREA	TYPE	SQ	SEQ		
D		200	1773	10	090		

SCALE 1/2" = 1'-0" SHEET E-2

MADE FROM 185384

File: 515208.dwg Path: H:\ved3\043-13-1999\Jobs\ID: MJJ5 Drawn in Model Space Date: 09/18/2000 10:18 A.M.

REVISIONS		
REV	DESCRIPTION	EFFECTIVE DATE

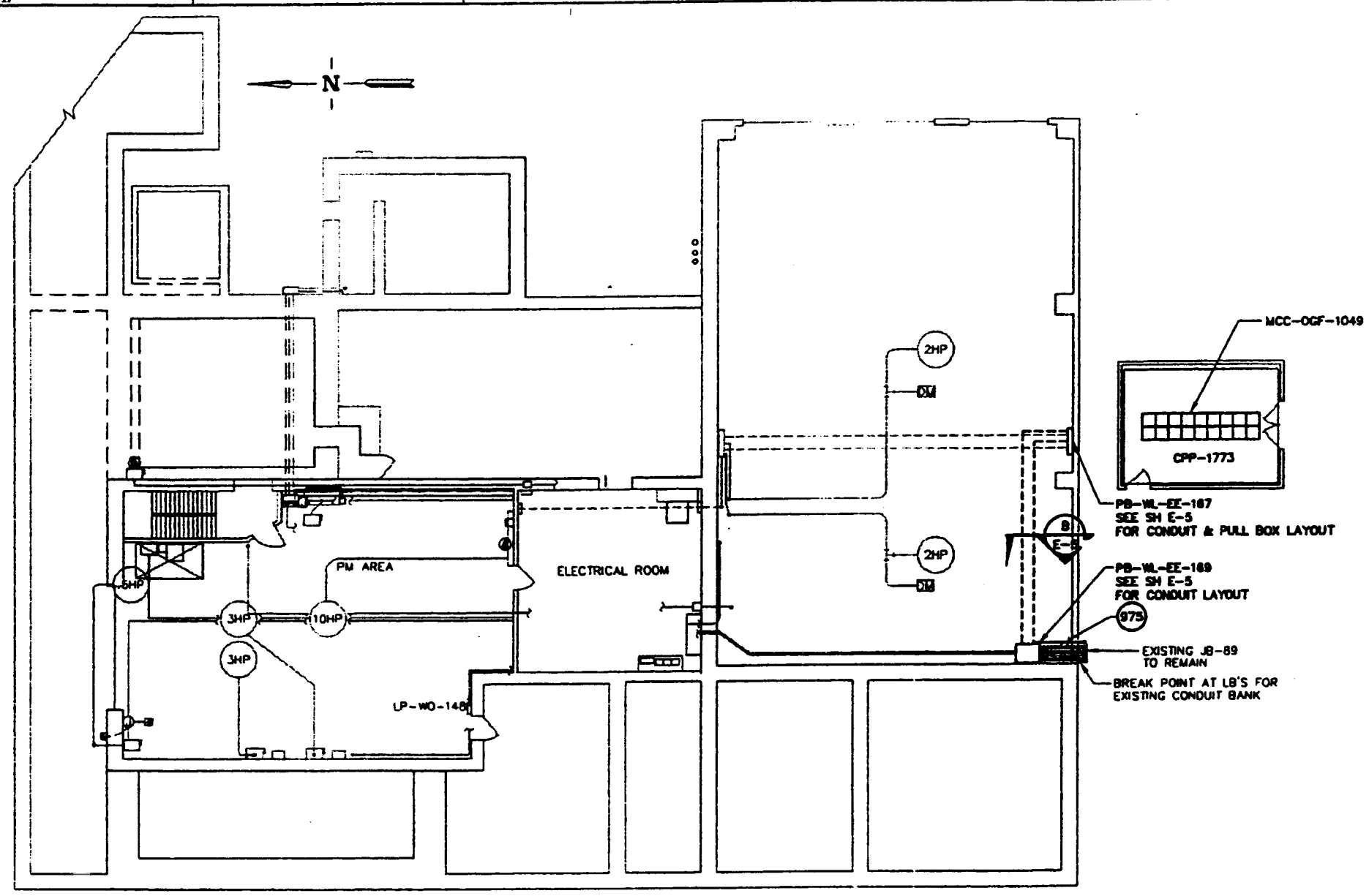

CPP-604 ELECTRICAL INSTALLATION PLAN

SCALE: 1/8" = 1'-0" (WO AREA) ELEV (+)10'-0"

NOTES

1. FOR INSTALLATION CONDUIT AND WIRE SCHEDULES SEE SH E-9.
2. SUBCONTRACTOR TO DETERMINE ACTUAL INTERFACE POINT FOR CONDUIT TO BE CONNECTED TO MCC-OGF-1049.

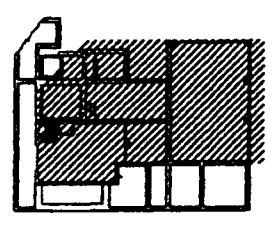

KEY PLAN

SCALE: NTS

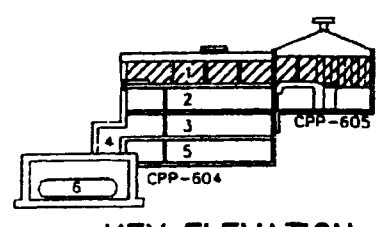

KEY ELEVATION

SCALE: NTS

REVISION: 0
ORIGINAL SIGNED BY: LARRY HILL
DATE ORIGINAL SIGNED: 9/18/2000
SEAL NUMBER: 9502
ORIGINAL STORED AT: EDMS DOCUMENT CONTROL

PROFESSIONAL ENGINEER REGISTERED 9502 STATE OF IDAHO LARRY J. HILL

BLDG CODE NUMBER			
AREA	FUN	A	DES
200	1773	10	090

FOR DRAWING INDEX SEE DRAWING NO.	515158
SCALE: 1/8" = 1'-0"	
DESIGN PHASE:	AFC
QUALITY LEVEL:	3
SUBCONTRACT NO.	S00-588051
DESIGNED:	M.S. KAPTEIN
DESIGN:	LARRY HILL
DRAWN:	M WARREN
PROJECT NO.	020878
SPEC CODE	
FOR REVISION/APPROVAL SIGNATURES SEE DWG NO.	186366
EFFECTIVE DATE:	9/18/2000

INEEL

INEEL
OU 3-13 GROUP 1
TANK FARM INTERIM ACTION
PHASE 1 & 2
CPP-604 FLOOR PLAN

SIZE	CODE IDENT	INDEX CODE NUMBER				DWG-515209	REV
D		200	0804	10	090		
SCALE: 1/8" = 1'-0"						SHEET E-3	

MADE FROM 186366

File: 515209.DWG
Path: H:\ydA5\OU3-13-PhaseF&G\AFC
IF: MJWS
Drawn in Model Space
Date: 09/06/2000 - 10:20 A.M.

REVISIONS		
REV	DESCRIPTION	EFFECTIVE DATE

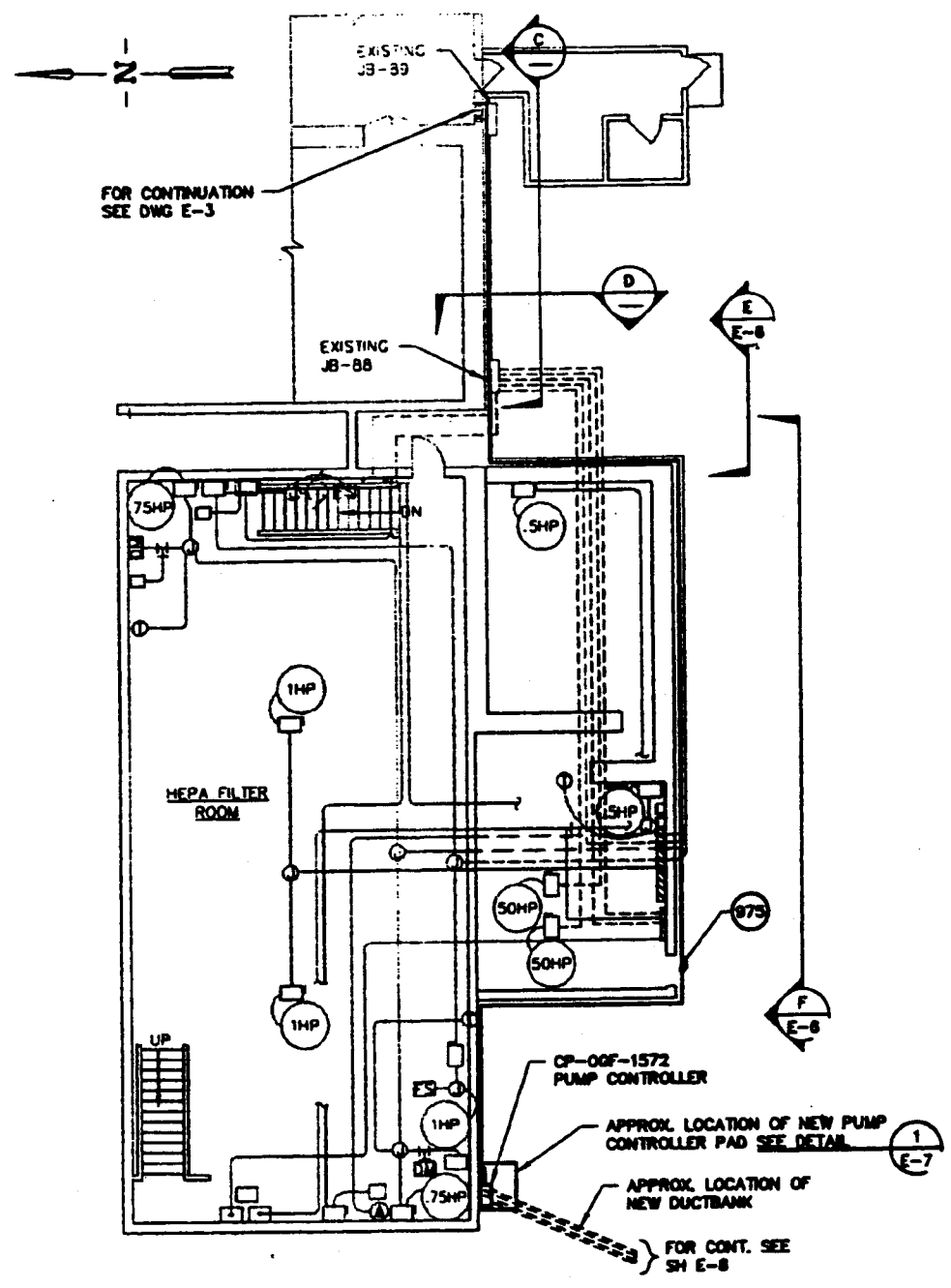

CPP-649 ELECTRICAL INSTALLATION PLAN

SCALE: 1/8" = 1'-0"

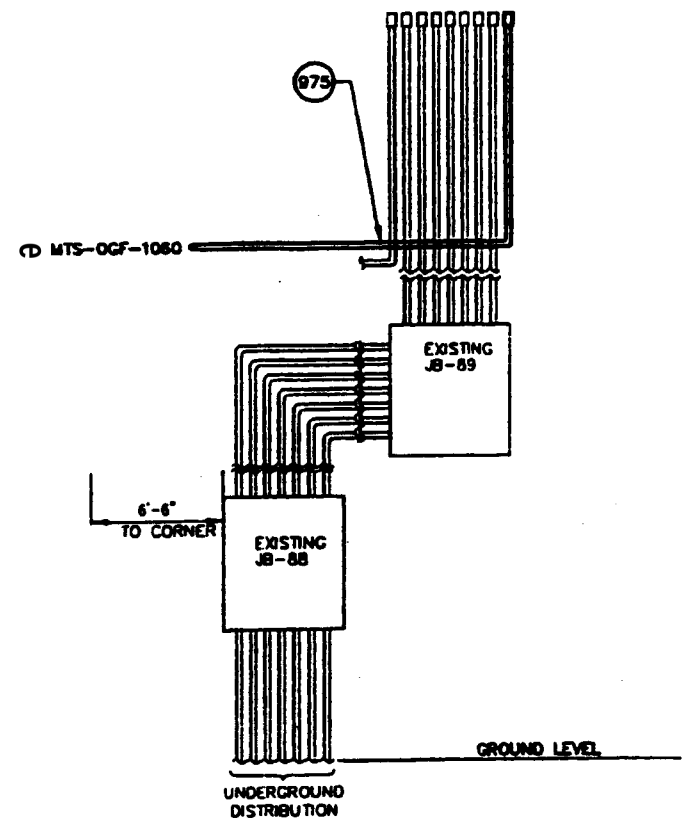

SECTION C

SCALE: 1/2" = 1'-0"

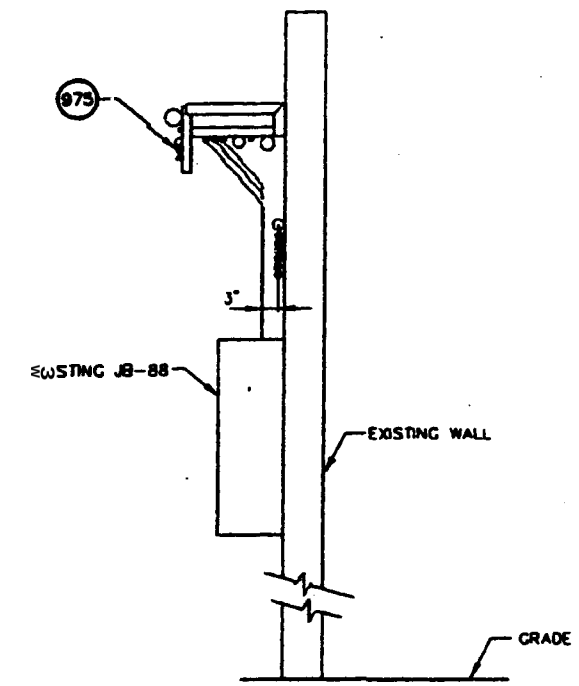

SECTION D

SCALE: 3/4" = 1'-0"

NOTES

1. FOR CONDUIT AND CABLE SCHEDULE SEE DRAWING E-9.

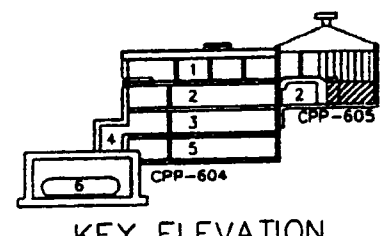

KEY ELEVATION

SCALE: NTS

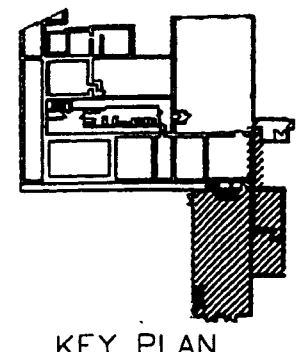

KEY PLAN

SCALE: NTS

REVISION: 0
ORIGINAL SIGNED BY: LARRY HILL
DATE ORIGINAL SIGNED: 9/18/2000
SEAL NUMBER: 9502
ORIGINAL STORED AT: CRDB DOCUMENT CONTROL

PROFESSIONAL ENGINEER REGISTERED 9502 STATE OF IDAHO LARRY J. HILL

SCALE: 3/4" = 1'-0"

FOR DRAWING INDEX SEE DRAWING NO. 515158	SUBCONTRACT NO. SOO-588051	INEEL
SCALE: 1/8" = 1'-0"	DESIGNED M.S. KAPTEIN	INEEL OU 3-13 GROUP 1 TANK FARM INTERIM ACTION PHASE 1 & 2 CPP-649 PLAN AND SECTIONS
SCALE: 1/2" = 1'-0"	DRAWN LARRY HILL	
	CHECKED W. WARDS	
	PROJECT NO. 020978	
	SPEC CODE	
DESIGN PHASE: AFC	FOR REVIEW/APPROVAL SIGNATURES	SIZE D; CAGE CODE; DWG- 515210; REV
QUALITY LEVEL: 3	EFFECTIVE DATE: 9/18/2000	SCALE: NOTED; SHEET E-4

MADE FROM 186380

File: 515210.DWG Path: H:\vol3\OU3-13-TANKFARM\Phase 1&2\ID: MJP5 Drawn in Model Space Plot Date: 10-21 A.M.

REVISIONS		
REV	DESCRIPTION	EFFECTIVE DATE

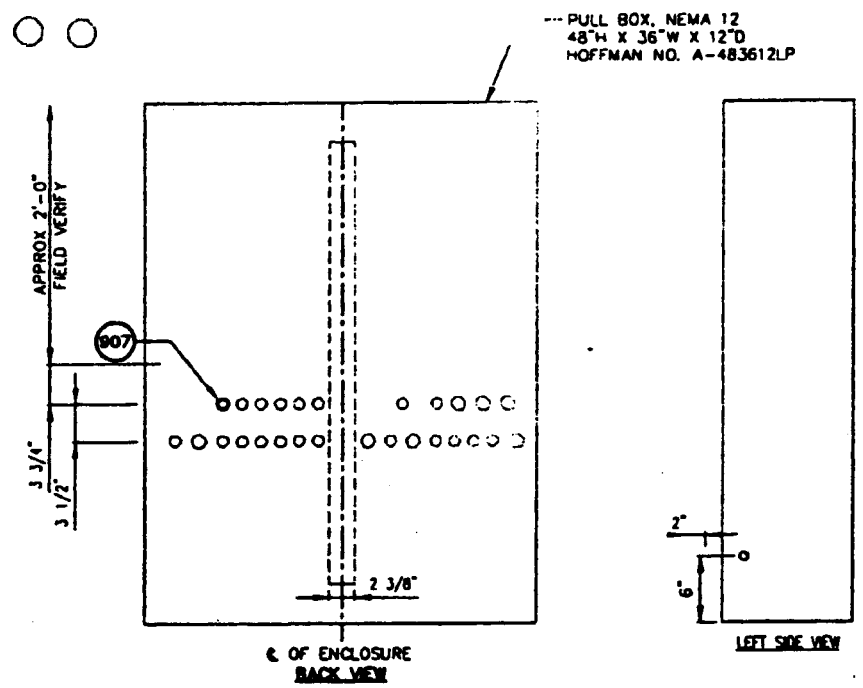

EXISTING PULL BOX PB-WL-EE-167
CONDUIT LAYOUT

SECTION A E-2
SCALE: 1 1/2" = 1'-0"

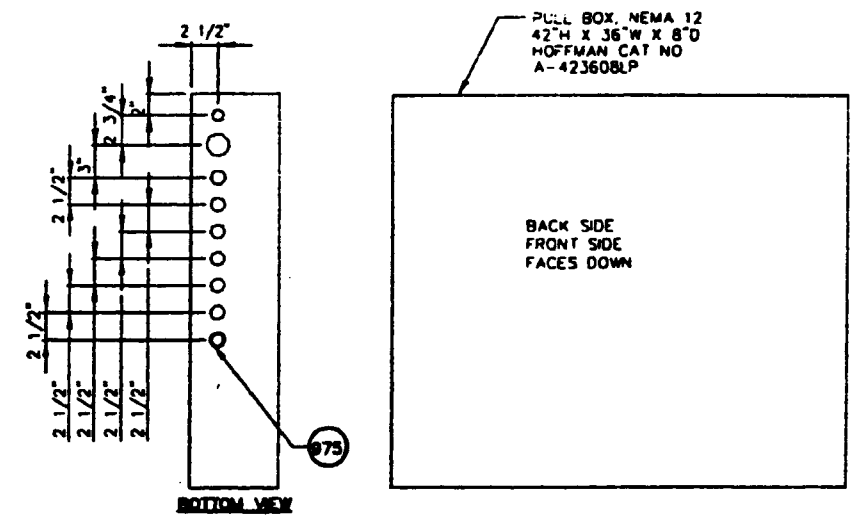

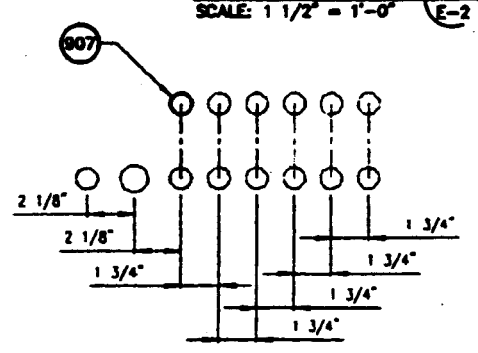

PB-WL-EE-167 LEFT HALF CONDUIT LAYOUT
SCALE: 3" = 1'-0"

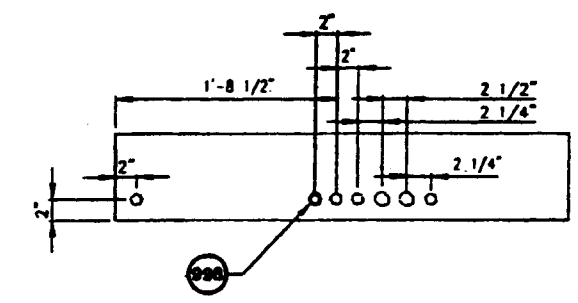

LEFT SIDE VIEW

EXISTING PULL BOX PB-WL-EE-169
CONDUIT LAYOUT
SCALE: 1 1/2" = 1'-0"

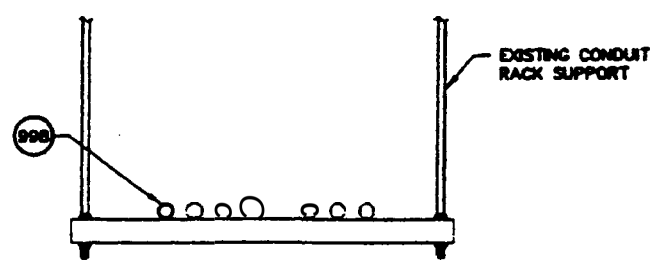

SECTION B E-3
SCALE: NTS

NOTES

1. FOR CONDUIT AND CABLE SCHEDULE SEE SHEET E-9.

REVISION: 0
ORIGINAL SIGNED BY: LARRY HILL
DATE ORIGINAL SIGNED: 9/18/2009
SEAL NUMBER: 9502
ORIGINAL STORED AT: CRDB DOCUMENT CONTROL

PROFESSIONAL ENGINEER REGISTERED 9502 STATE OF IDAHO LARRY J. HILL

FOR DRAWING INDEX SEE DRAWING NO.	515158
SCALE: 1 1/8" = 1'-0"	
SCALE: 3" = 1'-0"	
DESIGN PHASE:	AFC
QUALITY LEVEL:	3
SUBCONTRACT NO.	300-588051
REVIEWED: M.S. KAPTEIN	
DESIGN: LARRY HILL	
DRAWN: M. WATERS	
PROJECT NO.	020878
SPEC CODE	
FOR REVIEW/APPROVAL SIGNATURES SEE DAR NO. 00.300	
EFFECTIVE DATE:	9/18/2009

INEEL
INEEL
OU 3-13 GROUP 1
TANK FARM INTERIM ACTION
PHASE 1 & 2
PB-WL-EE-167 & 169 LAYOUT AND SECTIONS

SIZE	CODE IDENT	DWG CODE IDENT				DWG-515211	REV
D		200	17/3	70	080		
SCALE: NOTED						SHEET E-5	

MADE FROM 185372 & 185374

REVISIONS		
REV	DESCRIPTION	EFFECTIVE DATE:

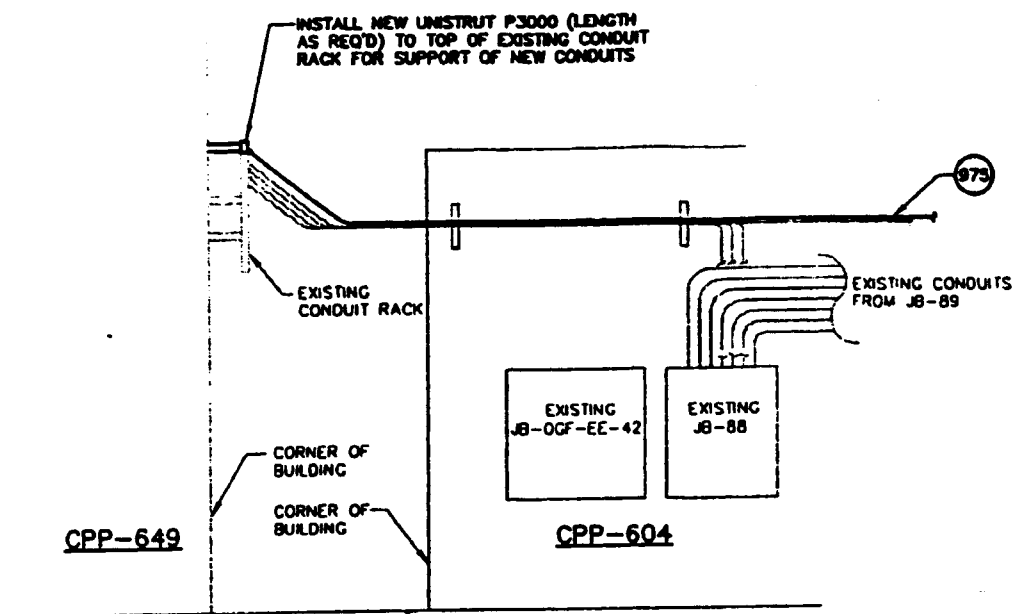

SECTION E/E-4
SCALE: 3/8"=1'-0"

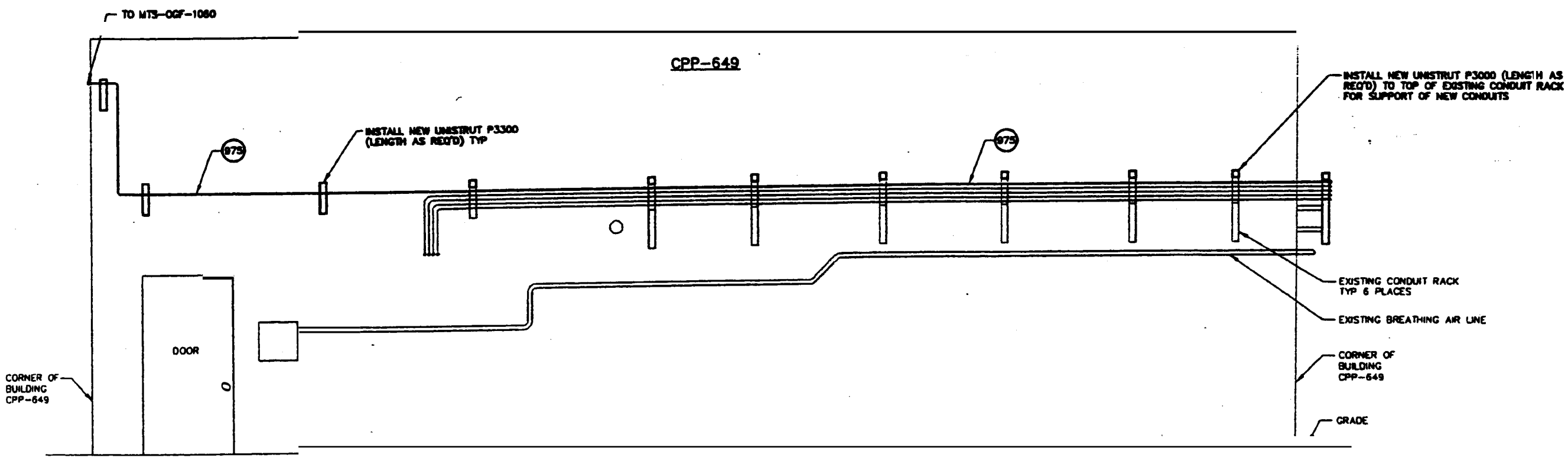

SECTION F/E-4
SCALE: 1/2" = 1'-0"

REVISION: 0
ORIGINAL SIGNED BY: LARRY HILL
DATE ORIGINAL SIGNED: 9/18/2000
SEAL NUMBER: 9502
ORIGINAL STORED AT: CRDB DOCUMENT CONTROL

PROFESSIONAL ENGINEER REGISTERED 9502 STATE OF IDAHO LARRY J. HILL

NOTES

1. FOR CONDUIT AND CABLE SCHEDULE SEE SHEET E-9.

FOR DRAWING INDEX SEE DRAWING NO.	515158
SCALE: 3/8" = 1'-0"	
SCALE: 1/2" = 1'-0"	
DESIGN PHASE:	AFC
QUALITY LEVEL:	3
CONTRACT NO.	SOO-588051
DESIGNED BY:	M.S. KAPTEIN
DRAWN BY:	LARRY HILL
DRAWN IN VERSION:	
PROJECT NO.	020878
SPEC CODE	
FOR REVISION/APPROVAL SUMMARIES SEE DWG NO.	515159
EFFECTIVE DATE:	9/18/2000

INEEL

INEEL
OU 3-13 GROUP 1
TANK FARM INTERIM ACTION
PHASE 1 & 2
SECTIONS

SIZE	CODE IDENT	AREA	SYSTEM	SEQUENCE	DWG	REV
D		200	0804	10	090	

DWG-515212

SCALE NOTED

SHEET E-6

MADE FROM 185378

DRAWING NUMBER				
AREA	SYS	SEQ	DWG	
200	0849	10	090	

File: 515212.DWG
Path: N:\nhs\OU3-13-TANKFARM\
ID: 14.195
Drawn in Model Space
Date: 09/08/2000 10:23 A.M.

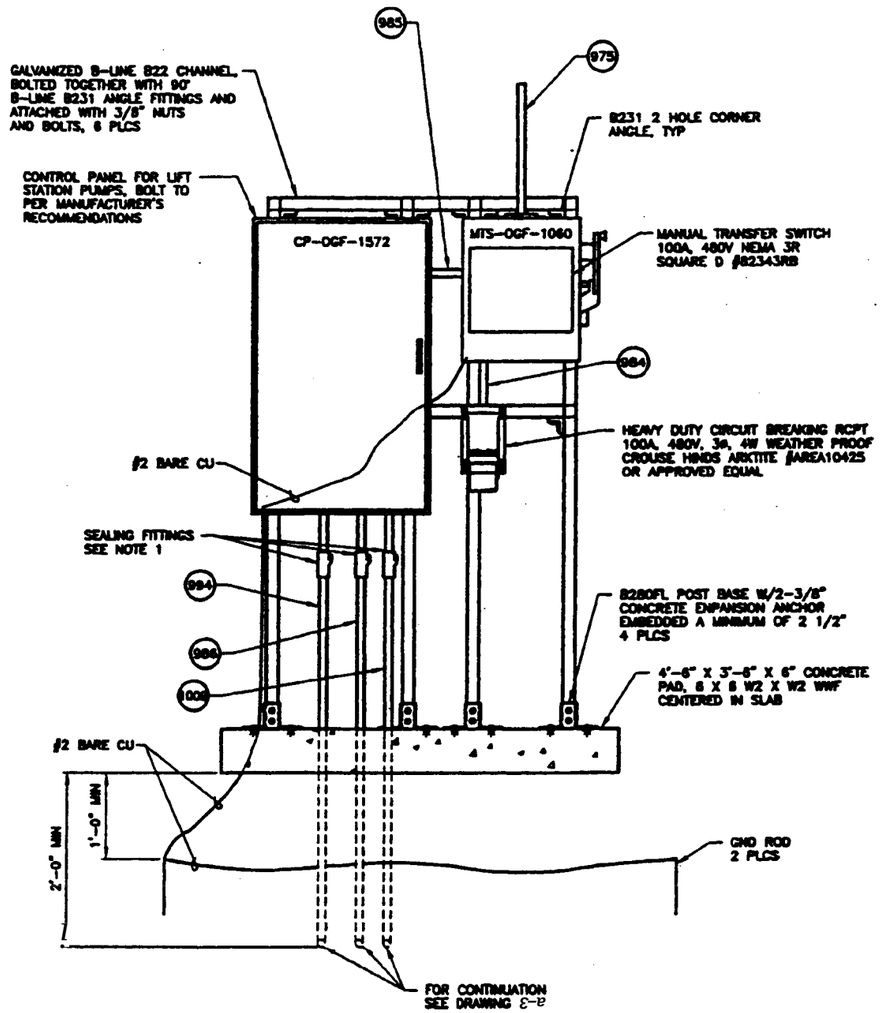

DETAIL 1 / E-4
1 1/2"=1'-0"

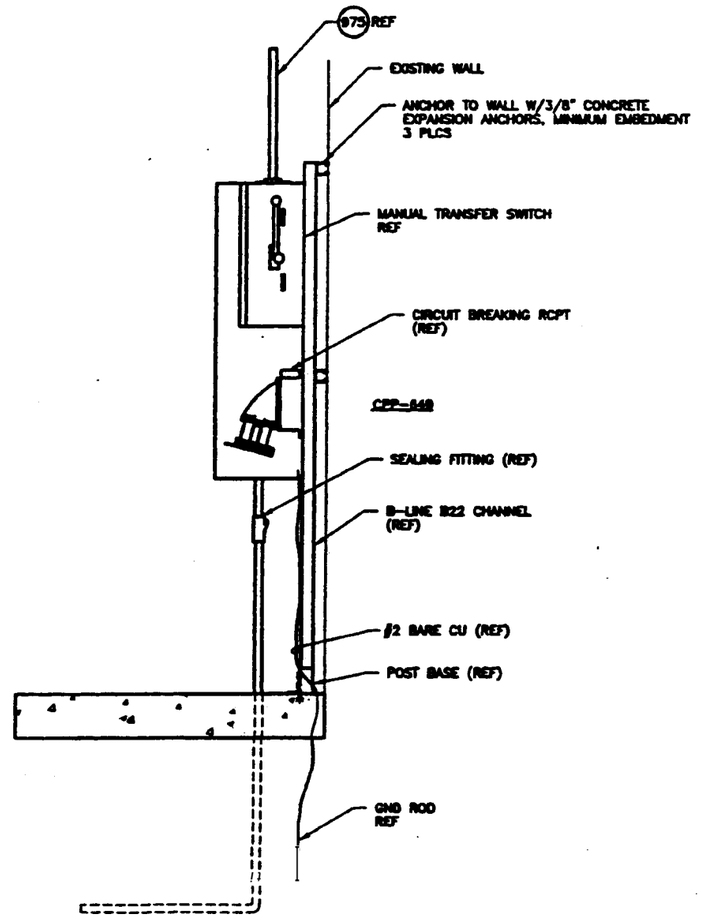

NOTES

1. INSTALL CROUSE-HINDS EYS FITTING WITH CHICO X FIBER AND CHICO SEALING COMPOUND OR APPROVED EQUAL.
2. PUMP CABLES ARE FURNISHED WITH THE PUMPS. PUMPS TO BE CONNECTED TO CONTROL PANEL AND TESTED BY A MANUFACTURERS REPRESENTATIVE UNDER THE SUPERVISION AND AT THE EXPENSE OF THE SUBCONTRACTOR.
3. FOR CONDUIT AND CABLE SCHEDULE SEE SHEET E-9.

REVISION: 0
ORIGINAL SIGNED BY: LARRY HILL
DATE ORIGINAL SIGNED: 9/18/2000
SEAL NUMBER: 9502
ORIGINAL STORED AT: CH2M DOCUMENT CONTROL

PROFESSIONAL ENGINEER REGISTERED 9502 STATE OF IDAHO LARRY J. HILL

FOR DRAWING INDEX SEE DRAWING NO. 515158	SUBCONTRACT NO. SOO-588051
SCALE: 1 1/2" = 1'-0"	DRAWN BY: M.S. NAPIERA; DESIGN: LARRY HILL; DRAWING: M WINNERS; PROJECT NO. 020878; SPEC CODE
DESIGN PHASE: AFC	FOR REVIEW/APPROVAL DRAWINGS SEE BID NO. 00300
QUALITY LEVEL: 3	EFFECTIVE DATE: 9/18/2000

INEEL
BECHTEL BWXT IDAHO, LLC

INEEL
OU 3-13 GROUP 1
TANK FARM INTERIM ACTION
PHASE 1 & 2
PUMP CONTROLLER PAD DETAILS

SIZE	CADD CODE	SITE CODE	SYSTEM	DWG NO.	REV
D		20A	LOC	515213	
		200	0849	191080	

SCALE: 1 1/2" = 1'-0" SHEET E-7

REVISIONS

REV	DESCRIPTION	EFFECTIVE DATE

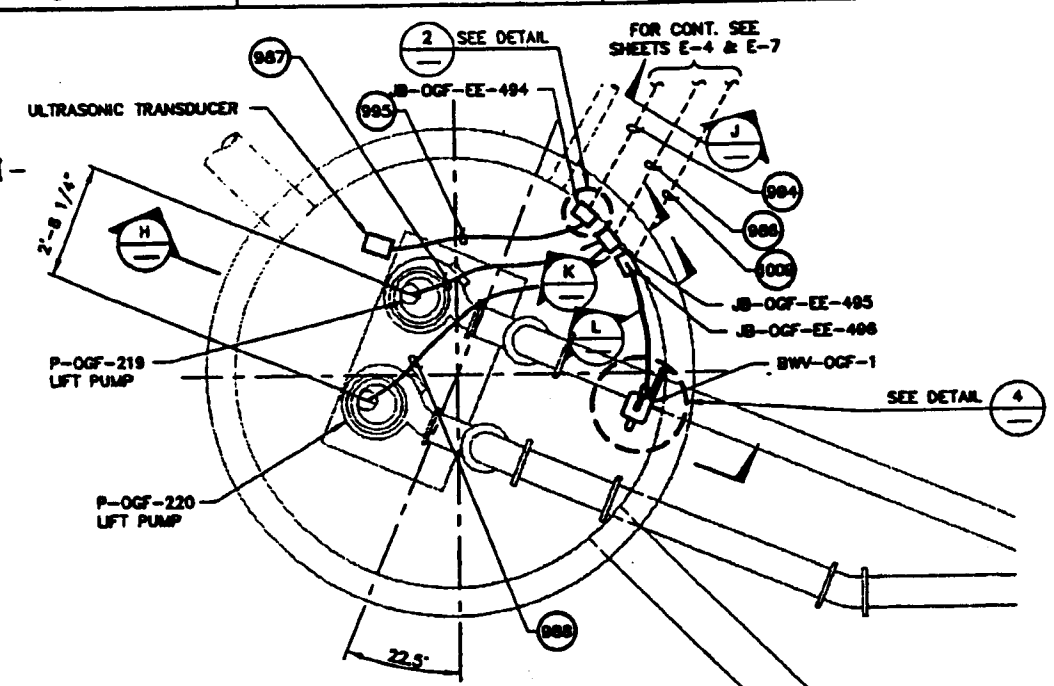

LIFT STATION #1792 PLAN

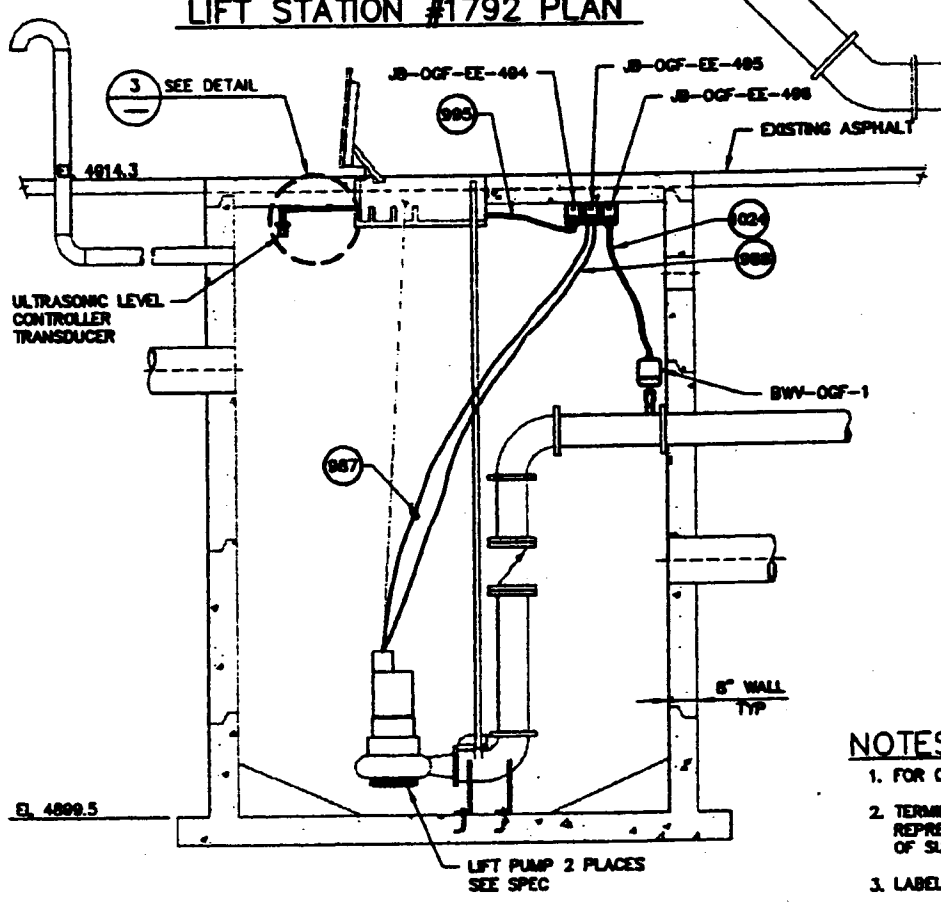

SECTION H
SCALE: 1/2"=1'-0"

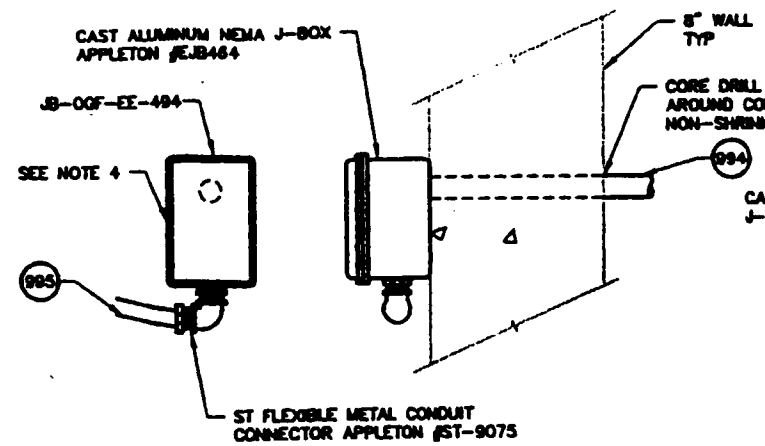

DETAIL 2
3"=1'-0"

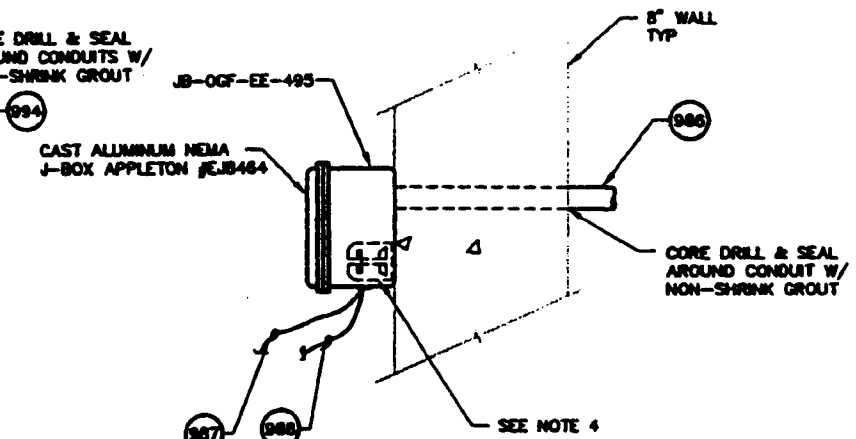

SECTION K
3"=1'-0"

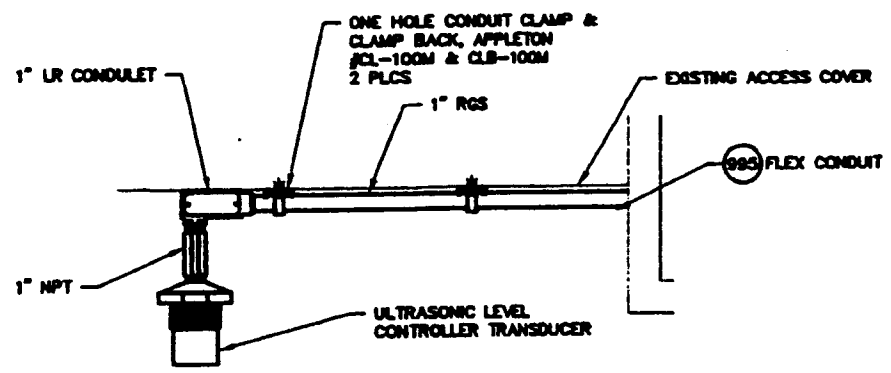

DETAIL 3
3"=1'-0"

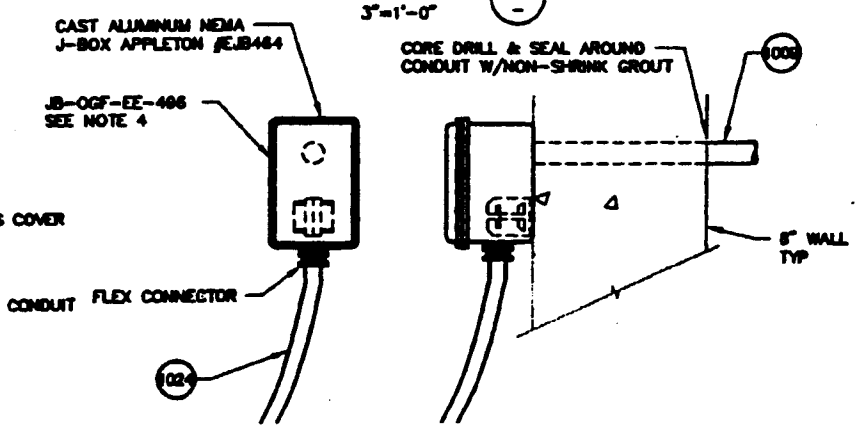

SECTION L
3"=1'-0"

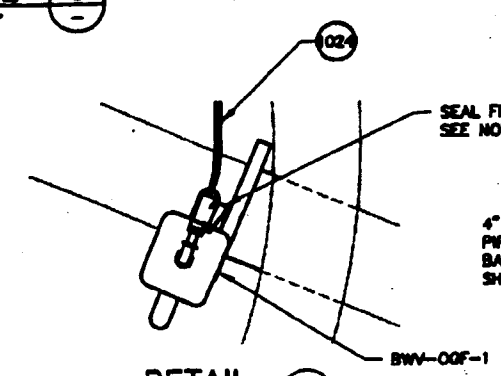

DETAIL 4
3"=1'-0"

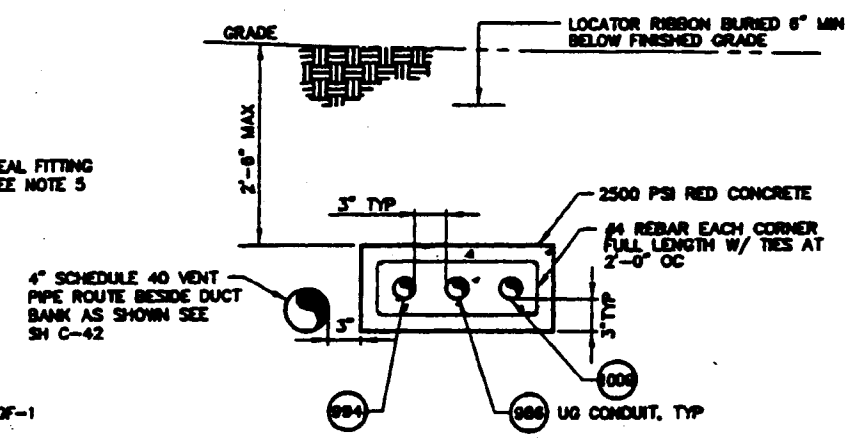

DUCTBANK SECTION J
NTS

NOTES

1. FOR CONDUIT AND CABLE SCHEDULE SEE SHEET E-9.
2. TERMINATIONS AND TESTING TO BE DONE BY MANUFACTURERS REPRESENTATIVE UNDER THE SUPERVISION AND AT THE EXPENSE OF SUBCONTRACTOR.
3. LABEL ALL EQUIPMENT PER SPECIFICATIONS.
4. INSTALL NEW WEATHERPROOF, CLASS 1, DIVISION 2, GROUPS C, D, RATED J-BOX. USE ENTRELEC M4/8 TERMINAL BLOCKS WITH RAIL AND 2 END SECTIONS TO TERMINATE CONDUCTORS. SPLICE COAXIAL CABLE WITH IN-LINE COAXIAL SPLICE CONNECTOR INSTALL CLASS 1 DIVISION 2 RATED LIQUIDTIGHT STRAIN RELIEF CONNECTORS AT CORD ENTRANCES TO BOXES.
5. INSTALL CROUSE-HINDS EYS FITTING WITH CHICO X FIBER AND CHICO SEALING COMPOUND OR APPROVED EQUAL.

REVISION: 0
ORIGINAL SIGNED BY: LARRY HILL
DATE ORIGINAL SIGNED: 9/18/2000
SEAL NUMBER: 9502
ORIGINAL STORED AT: CROB DOCUMENT CONTROL

PROFESSIONAL ENGINEER REGISTERED 9502 STATE OF IDAHO LARRY L. HILL

REVISIONS		
REV	DESCRIPTION	EFFECTIVE DATE

FOR DRAWING INDEX SEE DRAWING NO. 515158
SCALE: 1/2" = 1'-0"
SCALE: 3" = 1'-0"
DESIGN PHASE: AFC
QUALITY LEVEL: 3

SUBCONTRACT NO. 500-588051
DRAWN BY: M.S. KAPTEIN
DESIGN: LARRY HILL
DRAWN: M WATERS
PROJECT NO. 020878
SPEC CODE
FOR REVIEW/APPROVAL SIGNATURES SEE BAR NO. 00290
EFFECTIVE DATE: 9/18/2000

INEEL
INEEL
OU 3-13 GROUP 1
TANK FARM INTERIM ACTION
PHASE 1 & 2
LIFT STATION #1792 PLAN, SECTION & DETAILS

SIZE	CAGE CODE	DRAWING NUMBER					DWG-	REV
		AREA	SYS	A	SEQ		515214	
D		200	1792	10	090			

SCALE: NOTED
SHEET E-8

58

REVISIONS		
REV	DESCRIPTION	EFFECTIVE DATE

SPCC-WO-1048, PCC-WO-1226 & MCC-OGF-1049 INSTALLATION CONDUIT & WIRE SCHED (CONT'D)

ITEM NO.	FROM	TO	COND SIZE	CKT LGTH	POWER CONDUCTOR	NEUT	GND	REFERENCE DRAWING	REMARKS
900	MCC-OGF-1049 CKT #2E MCC-OGF-1049 CKT #2G	PB-WL-EE-167	1"	15'	3#10 3#10		#12 #12	18.E-64 18.E-74	BLO-WL-523 (SEE CONDUIT 941) P-WL-228 (SEE CONDUIT 948)
901	MCC-OGF-1049 CKT #2J MCC-OGF-1049 CKT #2N	PB-WL-EE-167	1"	15'	3#10 3#10,4#14		#12 #12	18.E-64 18.E-74	MCC-WDS-294 (SEE CONDUIT 942) BLO-WL-524 (SEE CONDUIT 958)
902	MCC-OGF-1049 CKT #5L	PB-WL-EE-167	1"	15'	3#8,3#14		#10	18.E-64 18.E-74	BLO-WL-209 (SEE CONDUIT 942)
903	MCC-OGF-1049 CKT #3E MCC-OGF-1049 CKT #3L	PB-WL-EE-167	1"	15'	3#10,3#14 3#10		#12 #12	18.E-64 18.E-74	BLO-WO-526 (SEE CONDUIT 954) P-WL-206A (SEE CONDUIT 952)
904	MCC-OGF-1049 CKT #5G MCC-OGF-1049 CKT #4D	PB-WL-EE-167	1"	15'	3#10,3#14 3#10,4#14		#12 #12	18.E-64 18.E-74	P-WO-201 (SEE CONDUIT 950) DOR-WO-403 (SEE CONDUIT 950)
905	MCC-OGF-1049 CKT #4H	PB-WL-EE-167	1"	15'	3#10,3#14		#12	18.E-64 18.E-74	BLO-WO-527 (SEE CONDUIT 954)
906	MCC-OGF-1049 CKT #4N	PB-WL-EE-167	1 1/2"	15'	3#2.5#14		#8	18.E-64 18.E-74	BLO-OGF-214 (SEE CONDUIT 944)
907	MCC-OGF-1049 CKT #3J	PB-WL-EE-167	1"	-	3#8		#8	E-2 E-3	CP-OGF-1572

MADE FROM 185360

SPCC-WO-1048, PCC-WO-1226 & MCC-OW-1049 INSTALLATION CONDUIT & WIRE SCHED (CONT'D)

ITEM NO.	FROM	TO	COND SIZE	CKT LGTH	POWER CONDUCTOR	NEUT	GND	REFERENCE DRAWING	REMARKS
975	PB-WL-EE-169	MTS-OGF-1060	1"	·	3#8		#8	E-3 THRU E-7	PUMP CONTROLLER POWER
984	CIRCUIT BREAKING RCPT	MTS-OGF-1060	1"	·	3#8		#8	E-7	PUMP CONTROLLER STANDBY POWER
985	MTS-OGF-1060	CP-OGF-1572	1"	·	3#8		#8	E-7	PUMP CONTROLLER POWER
986	CP-OGF-1572	JB-OGF-EE-495	1"	·	6#10 4#14		#10	E-7 E-8	J-BOX IN CATCH BASIN (PUMP POWER)
987	JB-OGF-EE-485	P-OGF-219	·	·	MFR. CORD		·	E-8	PUMP MOTOR POWER/CONTROL
988	JB-OGF-EE-485	P-OGF-220	·	·	MFR. CORD		·	E-8	PUMP MOTOR POWER/CONTROL
994	CP-OGF-1572	JB-OGF-EE-494	1"	·	RG-62U		·	E-7 E-8	J-BOX IN CATCH BASIN (PUMP CONTROL)
995	JB-OGF-EE-494	LEVEL TRANSDUCER	3/4" FLEX	·	MFR. CORD			E-7 E-8	LEVEL CONTROL
998	PB-WL-EE-167	PB-WL-EE-169	1"	·	3#8		#8	E-5	CP-OGF-1572

MADE FROM 185362

SPCC-WO-1048, PCC-WO-1226 & MCC-OGF-1049 INSTALLATION CONDUIT & WIRE SCHED (CONT'D)

ITEM NO.	FROM	TO	COND SIZE	CKT LGTH	POWER CONDUCTOR	NEUT	GND	REFERENCE DRAWING	REMARKS
1009	CP-OGF-1572	JB-OGF-EE-496	1"	·	5#14		·	E-7 E-8	DRAIN VALVE CONTROL/HEATER
1024	JB-OGF-EE-496	BWV-OGF-1	3/4" FLEX	·	5#14		·	E-7 E-8	DRAIN VALVE CONTROL/HEATER

MADE FROM 185363

MOTOR CONTROL CENTER SCHEDULE (WEST SIDE)

MCC-OGF-1049

MCC VOLTS 480/277V WIRE 4 PHASE 3 CONTROL VOLTAGE 120V
BUSS RATING: HORIZONTAL 600 VERTICAL 300
LOCATION: CPP-1773 UPPER LEVEL

CKT NO	NAMEPLATE - LABEL	HP/KVA	F.L. STARTER SIZE		CC PROTECTION FRAME SIZE	TRIP SET	CONTROLS START STOP	HOA	PILOT LIGHT	REMARKS SEE NOTE 3
1C	SPCC-WO-1048		-		25A	-				
1E	LIGHTS PEW CELL	2.5	-		20A	-		X	X	CONTACTOR
1G	RECT-WN-1	4.5	-		20A	-		X	X	CONTACTOR
1J	RECT-WN-7	4.5	-		20A	-		X	X	CONTACTOR
1N	MAIN				600A	600A				SEE NOTE 5
2CL	RCPT PM AREA					60A				(5)
2CR	SPARE					60A				
2E	BLO-WL-523	10	14		30A	•		X	X	(1)
2G	P-WL-228	5	7.6		15A	•		X	X	(1)
2J	MCC-WDS-294	6	-		20A	-		X	X	(1) CONTACTOR
2L	P-WL-230	7.5	11	1	15A	•		X	X	(5)
2N	BLO-WL-524	2	3.4	1	7A	•		X	X	(5)
3C	RCPT CPP 649	-	-	-	60A					(5)
3E	BLO-WO-526	3/4	1.4	1	3A	•		X	X	(1)
3G	CRN-WO-402	7.5	-	1	15A	•		X	X	(1) CONTACTOR
3J	CP-OGF-1572	15	22	2	30A	-		X	X	
3L	P-WL-206A	2	3.4	1	7A	•		X	X	(1)

MADE FROM 185363

NAMEPLATE REPLACEMENT SCHEDULE

OLD DESCRIPTION		NEW DESCRIPTION		REMARKS
COMPARTMENT	EQUIPMENT	COMPARTMENT	EQUIPMENT	
1C	SPACE	1C	MTS-OGF-249	INSTALL NEW NAMEPLATE
1E	SPACE	1E	LIGHTS PEW CELL	INSTALL NEW NAMEPLATE
1G	SPACE	1G	RECT-WN-1	INSTALL NEW NAMEPLATE
1J	SPACE	1J	RECT-WN-7	INSTALL NEW NAMEPLATE
2C	SPACE	2C	RCPTS PM AREA	INSTALL NEW NAMEPLATE
2J	DSW-WDS-294	2J	MCC-WDS-294	REMOVE AND REPLACE NAMEPLATE
2L	P-WL-229	2L	P-WL-230	REMOVE AND REPLACE NAMEPLATE
2N	P-WN-204	2N	BLO-WL-524	REMOVE AND REPLACE NAMEPLATE
3C	SPACE	3C	RCPTS CPP-649	INSTALL NEW NAMEPLATE
3G	AHU-UTI-5504	3G	CRN-WO-402	REMOVE AND REPLACE NAMEPLATE
3J	COM-WN-260	3J	CP-OGF-1572	REMOVE AND REPLACE NAMEPLATE, SEE NOTE 1
4D	SPACE	4D	DOR-WO-403	REMOVE AND REPLACE NAMEPLATE

MADE FROM 185364

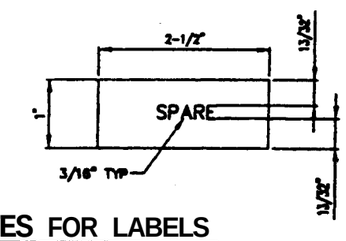

NOTES FOR LABELS

1. FURNISH AND INSTALL NEW LABELS PER THE NAMEPLATE REPLACEMENT SCHEDULE. LABELS SHALL BE BLACK FACED WITH WHITE LETTERING ON LAMINATED PLASTIC WITH BEVELED EDGE. LABELS SHALL BE SCREWED TO COMPARTMENT USING EXISTING SCREWS.

MCC LABEL DETAIL

SCALE: NTS

REVISION: 0
ORIGINAL SIGNED BY: LARRY HILL
DATE ORIGINAL SIGNED: 9/18/2000
SEAL NUMBER: 9502
ORIGINAL STORED AT: DOE DOCUMENT CONTROL

PROFESSIONAL ENGINEER REGISTERED 9502 STATE OF IDAHO LARRY J. HILL

PROJECT CODE NUMBER				PROJECT CODE NUMBER			
AREA	TYPE	SEQ	DISC	AREA	TYPE	SEQ	DISC
200	D649	10	090	200	D604	10	090

FOR DRAWING INDEX SEE DRAWING NO. 515158	SUBCONTRACT NO. 500-588051
NO SCALE	DESIGNED: M.S. KAPTEIN DESIGN: LARRY HILL DRAWN: M WATERS PROJECT NO. 020878 SPEC CODE
DESIGN PHASE: AFC	FOR REVIEW/APPROVAL SIGNATURES SEE DWG NO. 515156
QUALITY LEVEL: 3	EFFECTIVE DATE: 9/18/2000

INEEL
INEEL
OU 3-13 GROUP 1
TANK FARM INTERIM ACTION
PHASE 1 & 2
SCHEDULES AND LABEL DETAIL

SIZE	CODE IDENT	PROJECT CODE				DWG- 515215	REV
		AREA	TYPE	SEQ	DISC		
D		200	D773	10	090		
SCALE NONE						SHEET E-9	

MADE FROM 185360, 185362, 185363, 185363 & 185364

File: 515215.DWG Path: A:\ineel\OU3-13\INEEL\Schedule\dwg\DWG- 10:28 A.M.
ID: MJ73 Drawn in Model Space

REVISIONS		
REV	DESCRIPTION	EFFECTIVE DATE:

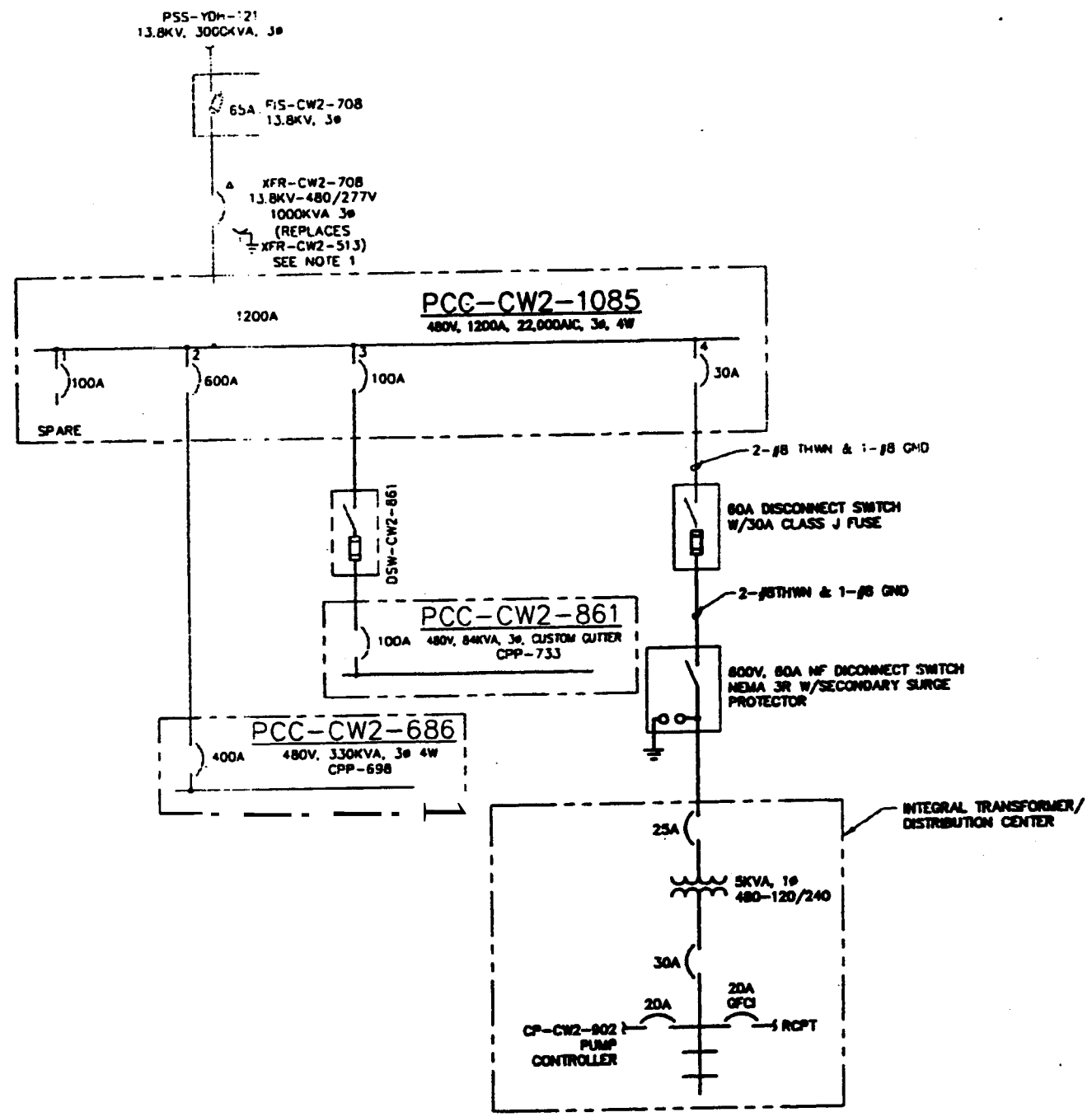

REVISION: 0
ORIGINAL SIGNED BY: LARRY HILL
DATE ORIGINAL SIGNED: 9/18/2000
SEAL NUMBER: 9502
ORIGINAL STORED AT: DOE DOCUMENT CONTROL

PROFESSIONAL ENGINEER REGISTERED 9502 STATE OF IDAHO LARRY J. HILL

FOR DRAWING INDEX SEE DRAWING NO. 515158	SUBCONTRACT NO. 500-588051	INEEL
NO SCALE	DESIGNER: M.S. KAPTEIN DESIGN: LARRY HILL DRAWN: M WATKINS PROJECT NO. 020878 SPEC CODE	INEEL OU 3-13 GROUP 1 TANK FARM INTERIM ACTION PHASE 1 & 2 PCC-CW2-1085 ONE LINE DIAGRAM
DESIGN PHASE: AFC QUALITY LEVEL: 3	FOR REVIEW/APPROVAL SIGNATURES SEE DAR NO. 00386 EFFECTIVE DATE: 9/18/2000	SIZE D; CAGE CODE; DWG 515216; REV; SCALE: NONE; SHEET E-10

File: 515216.DWG Path: K:\Jobs\OU3-13-TANK\Rev0\ Drawn in Model Space

REVISIONS		
REV	DESCRIPTION	EFFECTIVE DATE

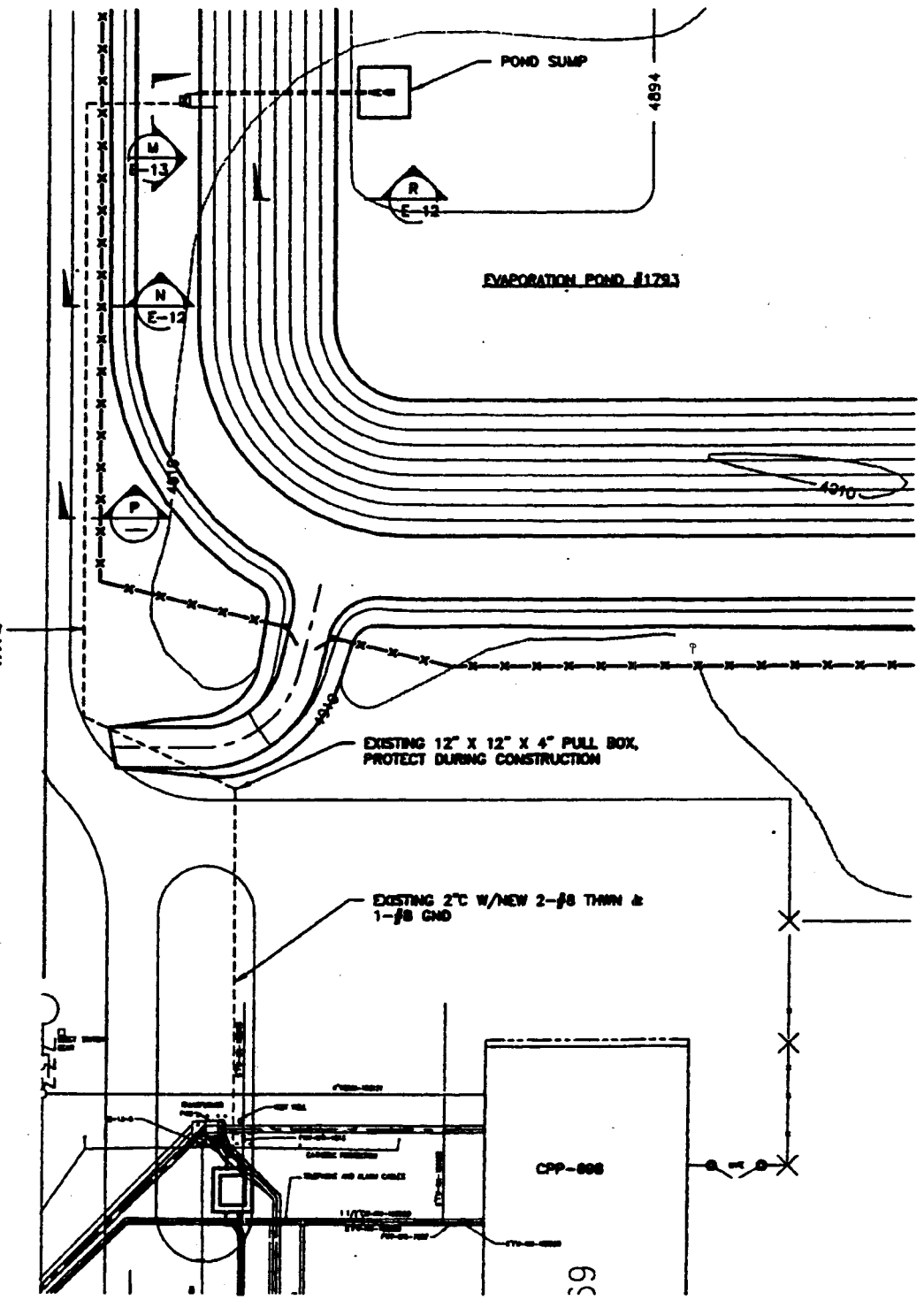

PARTIAL PLAN CONDUIT LAYOUT

SCALE: 1" = 30'-0"

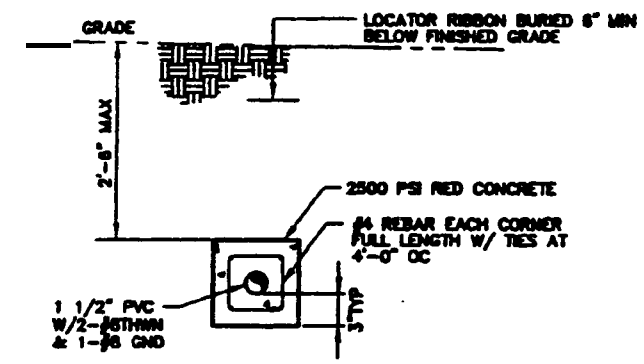

DUCTBANK SECTION (P)

NTS

X-REF DRAWING

515220.DWG

REVISION: 0
ORIGINAL SIGNED BY: LARRY HILL
DATE ORIGINAL SIGNED: 9/18/2000
SEAL NUMBER: 9502
ORIGINAL STORED AT: EROS DOCUMENT CONTROL

PROFESSIONAL ENGINEER CONSTRUCTION 9502 STATE OF IDAHO LARRY J. HILL

FOR DRAWING INDEX SEE DRAWING NO. 515158	CONTRACT NO. SOO-568051	INEEL
SCALE: 1" = 30'-0"	DESIGNED: M.S. KAPREM DRAWN: LARRY HILL CHECKED: M VANDERS	INEEL OU 3-13 GROUP 1 TANK FARM INTERIM ACTION PHASE 1 & 2 PARTIAL CONDUIT LAYOUT PLAN & SECTION
	PROJECT NO. 020878 SPEC CODE	SIZE D · CODE IDENT · DWG-515217 · REV · SHEET E-11
DESIGN PHASE: AFC QUALITY LEVEL: 3	FOR REVIEW/APPROVAL SIGNATURES SEE DWG NO. 68368 EFFECTIVE DATE: 9/18/2000	SCALE: NOTED

Plot: 515217.DWG Layout Name: LAYOUT-1
Path: A:\v853\003-13-1\020878\515217.DWG 10:28 A.M.

REVISIONS		
REV	DESCRIPTION	EFFECTIVE DATE

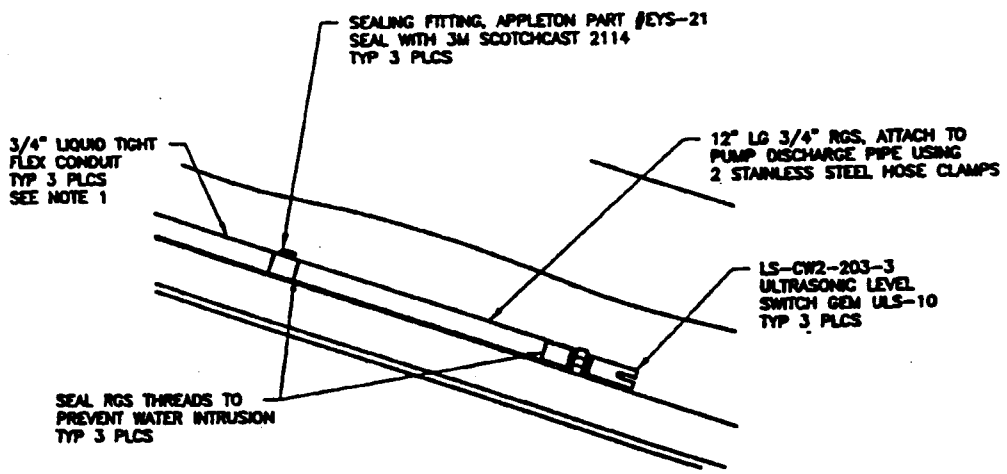

ULTRASONIC LEVEL SWITCH DETAIL (5/—) (5/C-23)

SCALE: 3" = 1'-0"

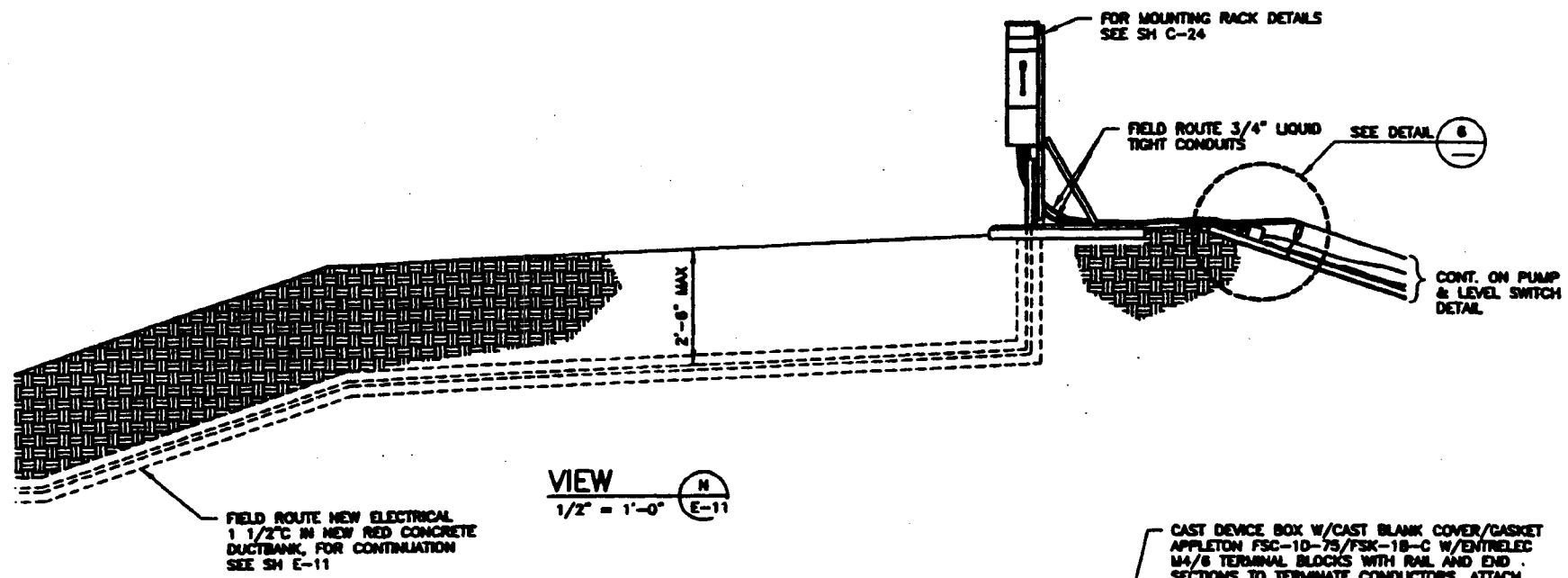

VIEW (N/E-11)

1/2" = 1'-0"

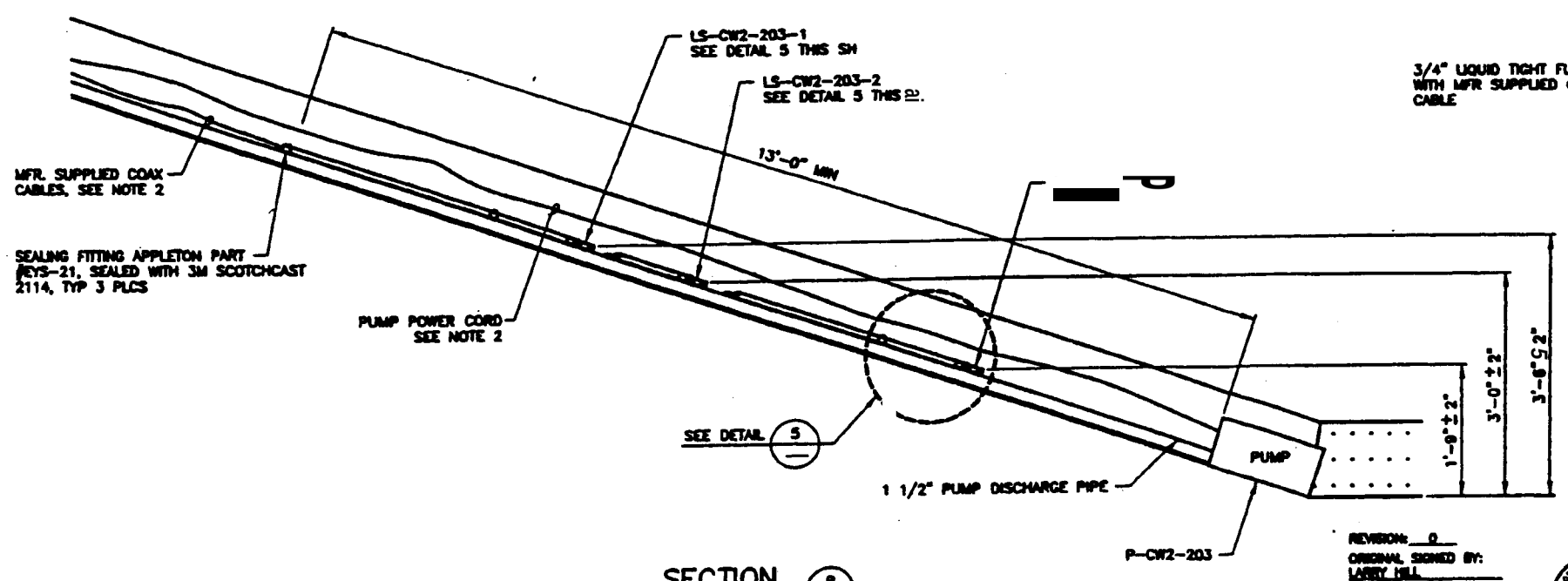

SECTION (R/E-11)

1" = 1'-0"

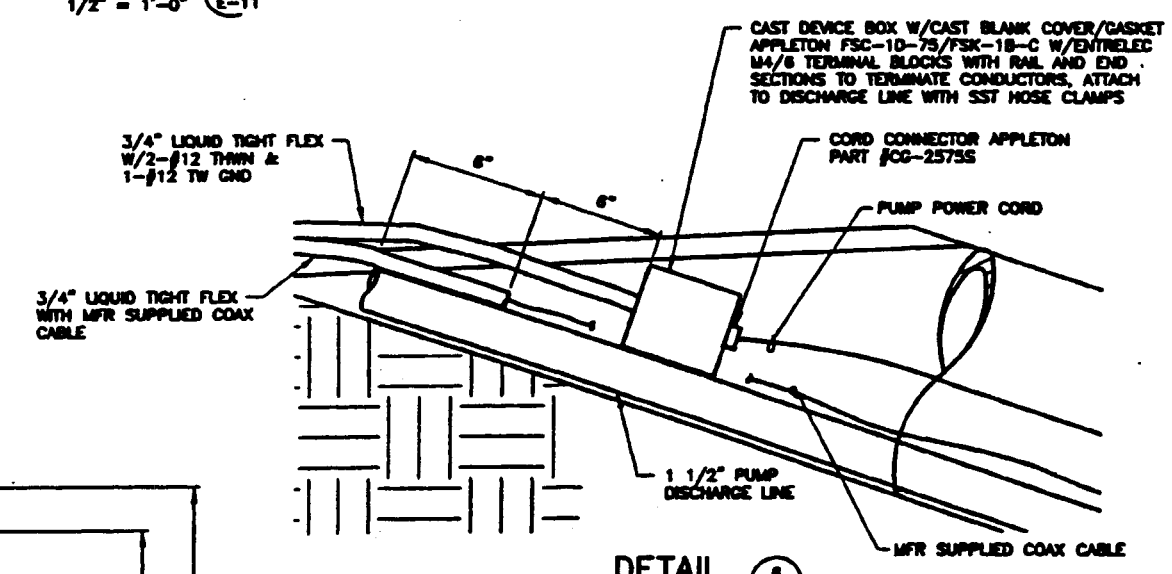

DETAIL (6/—)

1/4"=1'-0"

NOTES

1. ATTACH 3/4" LIQUID TIGHT FLEX CONDUITS TO 1 1/2" PUMP DISCHARGE LINE WITH SST HOSE CLAMPS 3'-0" O.C. MAX.
2. ATTACH PUMP POWER CORD AND LEVEL SWITCH COAX CABLE TO 1 1/2" PUMP DISCHARGE LINE WITH SST HOSE CLAMPS 3'-0" O.C. MAXIMUM. PROTECT CABLE JACKETS FROM DAMAGE CAUSED BY CLAMPS USING RUBBER OR EQUIVALENT.

REVISION: 0
ORIGINAL SIGNED BY: LARRY HILL
DATE ORIGINAL SIGNED: 9/18/2000
SEAL NUMBER: 9502
ORIGINAL STORED AT: EROB DOCUMENT CONTROL

PROFESSIONAL ENGINEER REGISTERED 9502 STATE OF IDAHO LARRY J. HILL

SCALE: 1/2" = 1'-0"

SCALE: 3" = 1'-0"

SCALE: 1" = 1'-0"

FOR DRAWING INDEX SEE DRAWING NO. 515158	SUBCONTRACT NO. 500-588051	INEEL
	DRAWN: M.S. KAPTEIN	INEEL OU 3-13 GROUP 1 TANK FARM INTERIM ACTION PHASE 1 & 2 VIEW AND DETAILS
	DESIGN: LARRY HILL	
	CHECK: M WINTERS	
	PROJECT NO. 020070	
	SPEC CODE	SIZE D; CAGE CODE; DWG-515218; REV
DESIGN PHASE: AFC	FOR REVIEW/APPROVAL SIGNATURES SEE DWG NO. 515158	
QUALITY LEVEL: 3	EFFECTIVE DATE: 9/18/2000	SCALE: NOTED; SHEET E-12

REVISIONS		
REV	DESCRIPTION	EFFECTIVE DATE

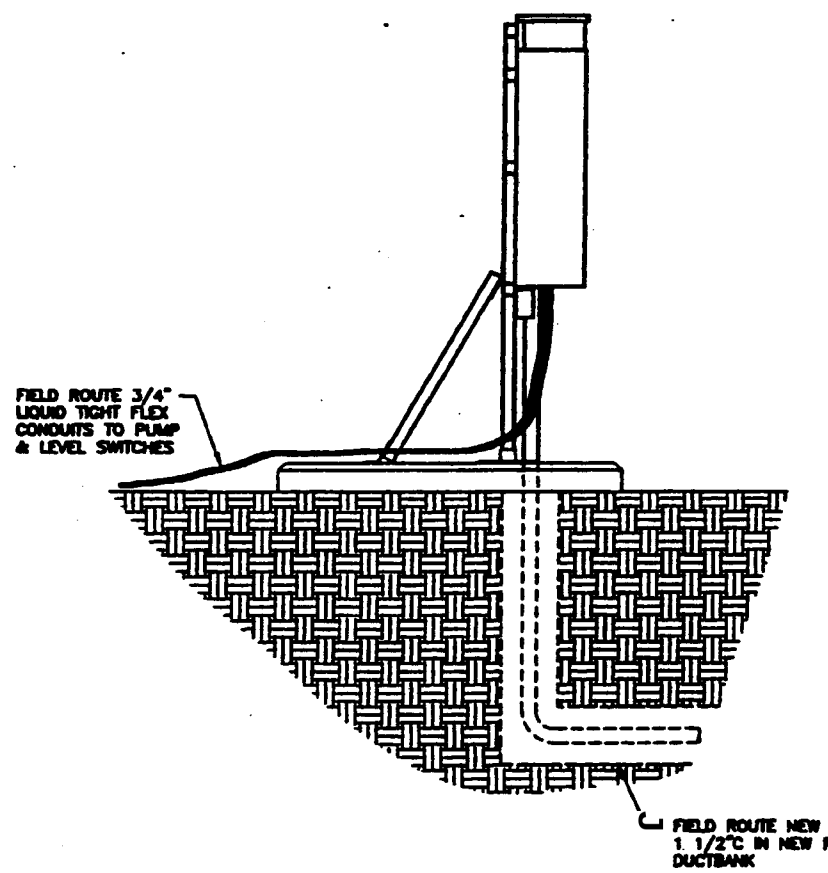

SIDE

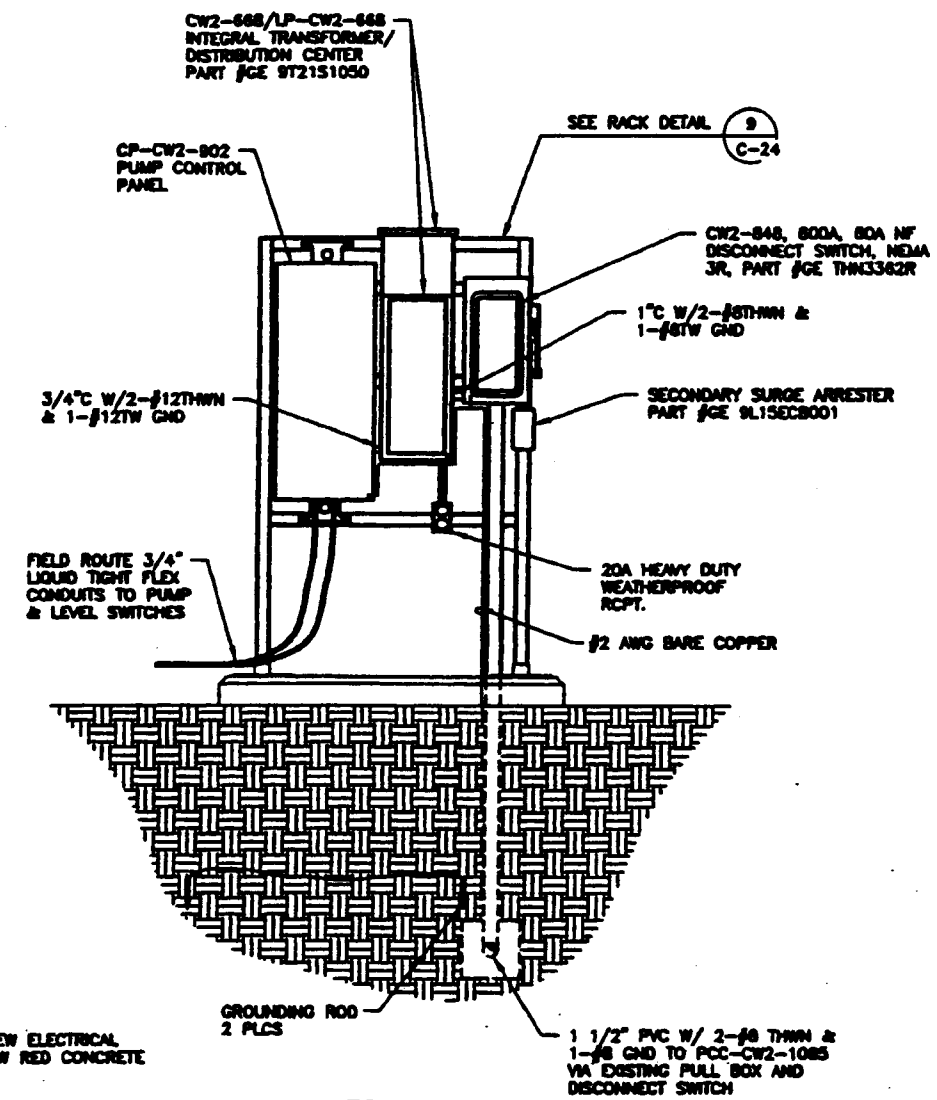

FRONT

VIEW M E-11
1" = 1'-0"

REVISION: 0
ORIGINAL SIGNED BY: LARRY HILL
DATE ORIGINAL SIGNED: 9/18/2000
SEAL NUMBER: 9502
ORIGINAL STORED AT: EDMS DOCUMENT CONTROL

PROFESSIONAL ENGINEER REGISTERED 9502 STATE OF IDAHO LARRY L. HILL

FOR DRAWING INDEX SEE DRAWING NO. 515158	SUBCONTRACT NO. SOO-588051	INEEL
SCALE: 1" = 1'-0"	DESIGNED M.S. KAPTEIN DESIGN LARRY HILL DRAWN M WATERS PROJECT NO. 620978 SPEC CODE	INEEL OU 3-13 GROUP 1 TANK FARM INTERIM ACTION PHASE 1 & 2 RACK ELEVATION & LAYOUT
DESIGN PHASE: AFC	FOR REVIEW/APPROVAL SIGNATURES SEE DAS NO. 002898	SIZE D · CAD CODE · DATE CODE YR 200 MO 12 DAY 13 TIME 10:00 · DWG-515219 · REV
QUALITY LEVEL: 3	EFFECTIVE DATE 9/18/2000	SCALE: NOTED · SHEET E-13

File: 515219.DWG ID: MJ85 Layout Name: 0 Size
Path: R:\edit\OU3-13-TANKFARM\AFC-Rack elevation\RTC- 10:39 AM