APPENDIX I PAGES ARE NOT
NUMBERED SEQUENTIALLY

INITIAL gf DATE 10/22/03

# Appendix I

# Drawings

| REVISIONS | | |
|---|---|---|
| REV | DESCRIPTION | EFFECTIVE DATE: |

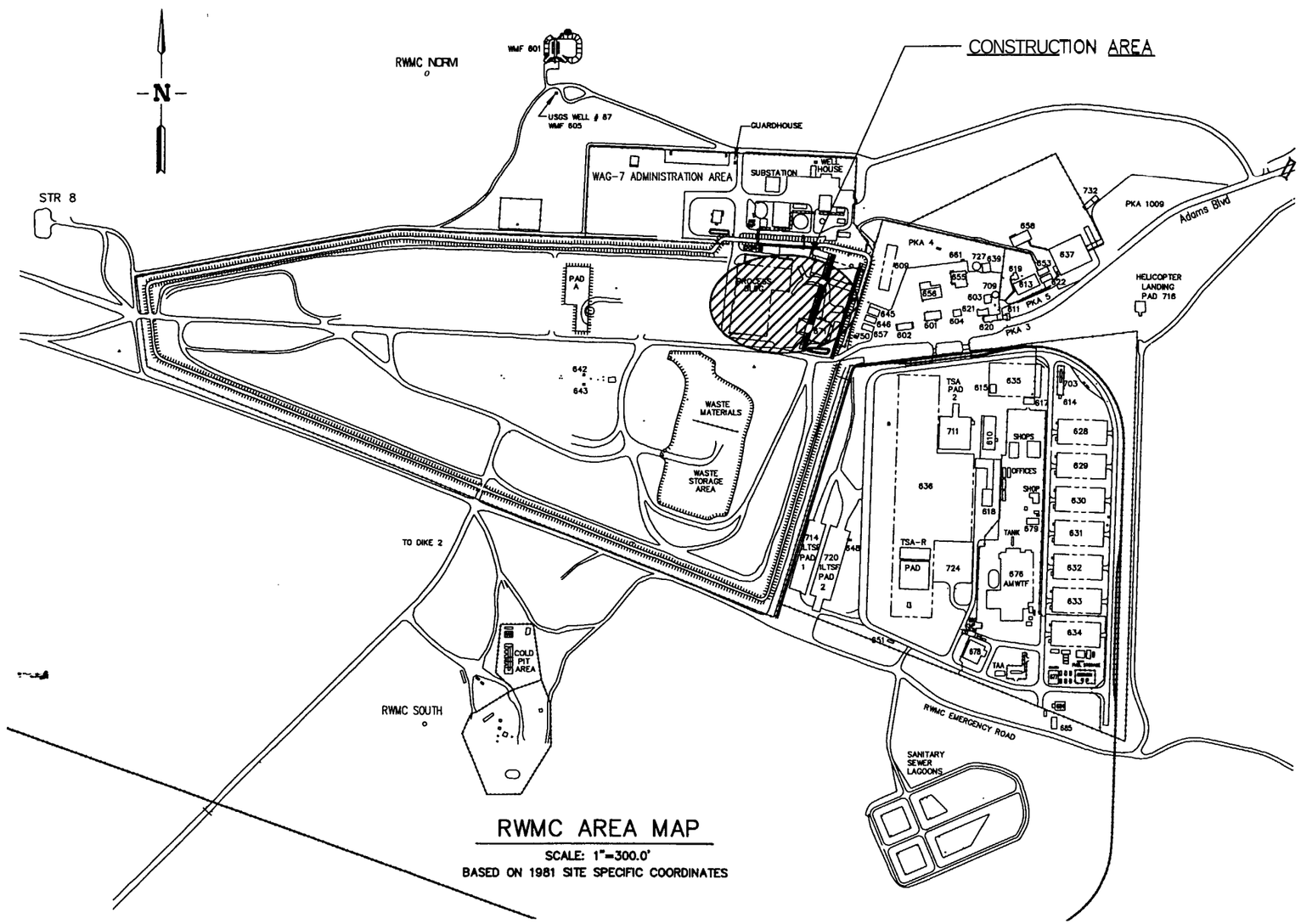


## RWMC AREA MAP

SCALE: 1"=300.0'
BASED ON 1981 SITE SPECIFIC COORDINATES

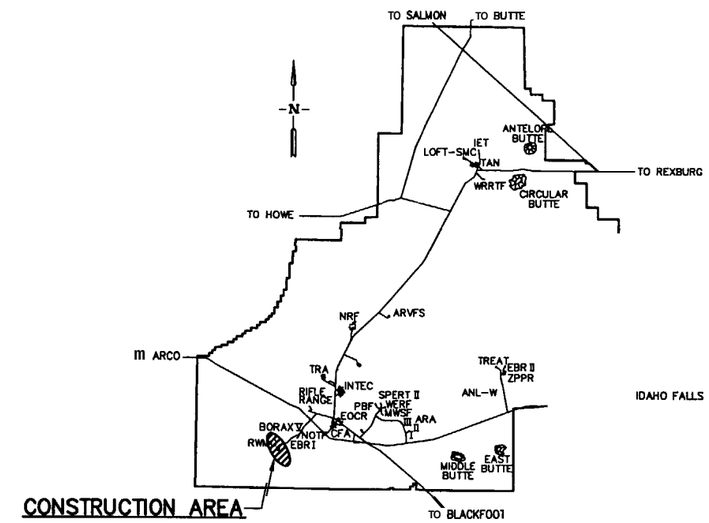


## INEEL SITE MAP

SCALE: NONE

| PAGE NO. | DWG NO. | DWG NO. | REV | DRAWING TITLE |
|---|---|---|---|---|
| 1 | 624934 | 1-T-1 | | **SITE MAP.** AREA MAP AND DRAWNG INDEX |
| 2 | 624935 | 1-01 | | EXISTING **SITE** PUN |
| 3 | 624936 | 1-C-2 | | IMPROVED SITE PUN |
| 4 | 624937 | 1-A-1 | | COMPACT **ALL WITH** THERMAL **DISORPTION FLOOR** PLAN |
| 5 | 624938 | 1-A-2 | | COMPACT ALL WITH THERMAL **DISORPTION** SECTION |
| 6 | 624939 | 1-A-3 | | COMPACT **ALL** WITH THERMAL **DISORPTION SECTION** |
| 7 | 624940 | 1-A-4 | | SEGREGATE AND THERMAL DISORPTION **SECTION** |
| 8 | 624941 | 1-A-5 | | COMPACT ALL WITH THERMAL **DISORPTION** SECTION |
| 9 | 624942 | 1-A-6 | | COMPACT ALL WITH INCINERATION PLAN AND ISOMETRIC VIEW |
| 10 | 624943 | 1-A-7 | | COMPACT ALL WITH INCINERATION SECTION |
| 11 | 624944 | 1-A-8 | | INTERIM STORAGE FACILITY PUN |
| 12 | 624945 | 1-E-1 | | ONUJNE DIAGRAM. 2AP |
| 13 | 624946 | 1-E-2 | | ONUJNE DIAGRAM. 3AP |
| 14 | 624947 | 1-PF-1 | | SORTING AND SEGREGATION PROCESS **FLOW** DIAGRAM |
| 15 | 624948 | 1-PF-2 | | NON-TRU THERMAL DESORPTION PROCESS **FLOW** MAGRAM |

**RELEASED**
**FOR RECORD ONLY**
**DO NOT FABRICATE**

| | | |
|---|---|---|
| FOR DRAWING INDEX SEE DRAWING NO. 624934 | SUBCONTRACT NO. N/A | INEEL (Idaho National Engineering & Environmental Laboratory) BECHTEL BWXT IDAHO, LLC |
| 300' 200' 100' 0 300' SCALE: 1" = 300.0' | REQUESTER: SL AUSTAD<br>DESIGN: WH LANDMAN<br>DRAWN: CA BEHM | OU 7-10, PIT 9 REMEDIATION PROJECT TREATMENT OPTION 1 |
| | PROJECT NO. 023203<br>SPEC CODE REC REL | SITE MAP, AREA MAP AND DRAWING INDEX |
| DESIGN PHASE: PRE CON | FOR REVIEW/APPROVAL SIGNATURES SEE DAR NO. 104771 | SIZE D · CAGE CODE 01MF3 · INDEX CODE NUMBER AREA 098 TYPE 0100 Q 01 ORG 090 · DWG-624934 · REV |
| SAFETY CATEGORY: N/A | EFFECTIVE DATE: 9-30-2003 | SCALE: NOTED · SHEET 1-T-1 |

File: 624934.dwg
Date: 09/30/03 - 1:49 P.M. | Layout Name: Layout1
ID: ABE

| REVISIONS | | |
|---|---|---|
| REV | DESCRIPTION | EFFECTIVE DATE: |

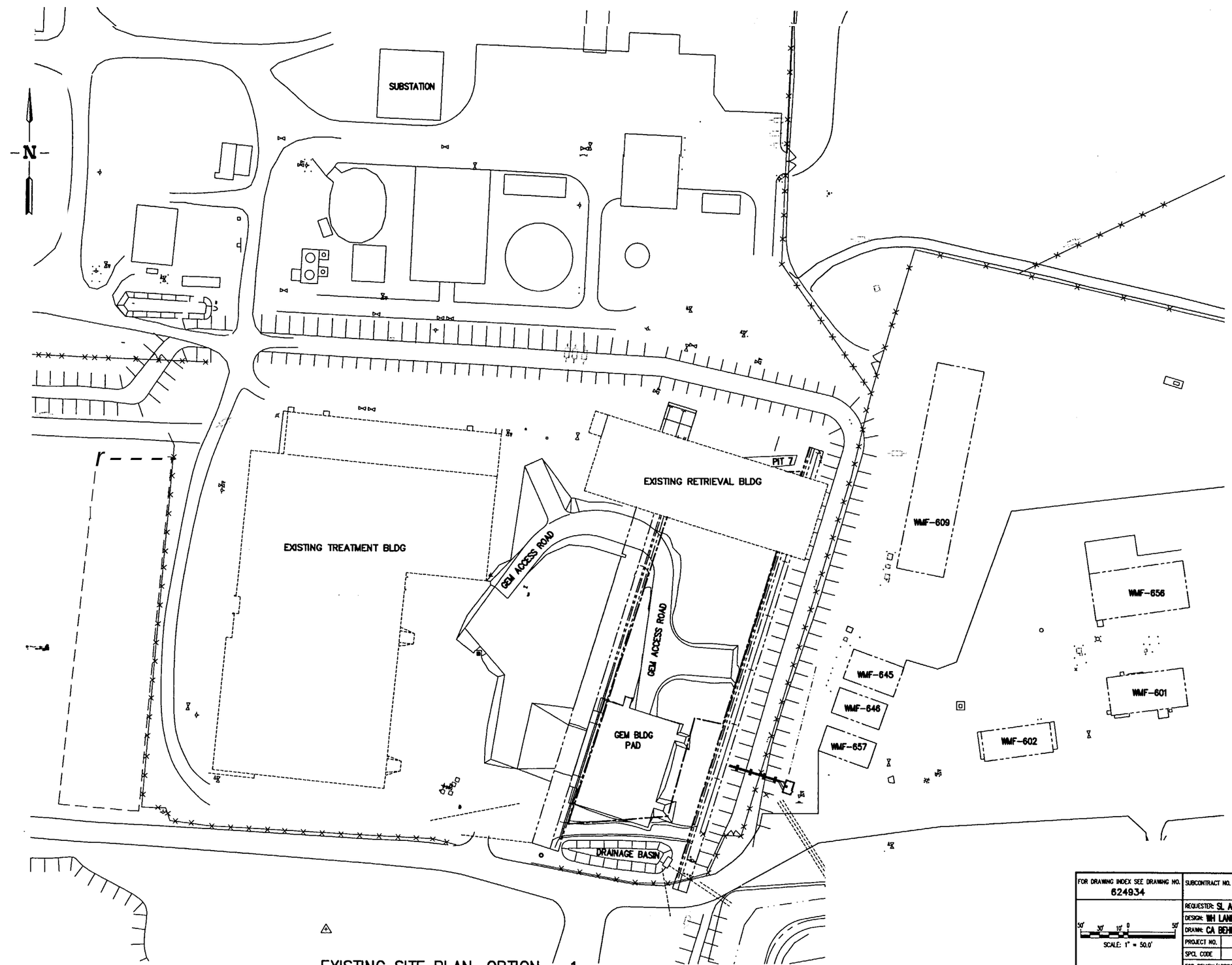


EXISTING SITE PLAN, OPTION – 1

**RELEASED FOR RECORD ONLY**

**DO NOT FABRICATE**

| | | |
|---|---|---|
| FOR DRAWING INDEX SEE DRAWING NO. 624934 | SUBCONTRACT NO. N/A | INEEL (Idaho National Engineering & Environmental Laboratory) BECHTEL BWXT IDAHO, LLC |
| 50' 30' 10' 0 50' SCALE: 1" = 50.0' | REQUESTER: SL AUSTAD | OU 7-10, PIT 9 REMEDIATION PROJECT TREATMENT OPTION 1 |
| | DESIGN: WH LANDMAN | |
| | DRAWN: CA BEHM | |
| | PROJECT NO. 023203 | EXISTING SITE PLAN |
| | SPCL CODE REC REL | |
| DESIGN PHASE: PRE CON | FOR REVIEW/APPROVAL SIGNATURES SEE DAR NO. 104771 | SIZE D · CAGE CODE 01MF3 · INDEX CODE NUMBER AREA 098 TYPE 0100 G. 02 ORG. 090 · DWG-624935 · REV |
| SAFETY CATEGORY: N/A | EFFECTIVE DATE: 9-30-2003 | SCALE: 1"=50.0' · SHEET 1-C-1 |

File: 624935.dwg Date: 09/29/03 – 3:26 P.M. | Layout Name: EXISTING option-1 ID: ABE
Site: TLNPV 01 RR TRFAT

| REVISIONS | | |
|---|---|---|
| REV | DESCRIPTION | EFFECTIVE DATE: |

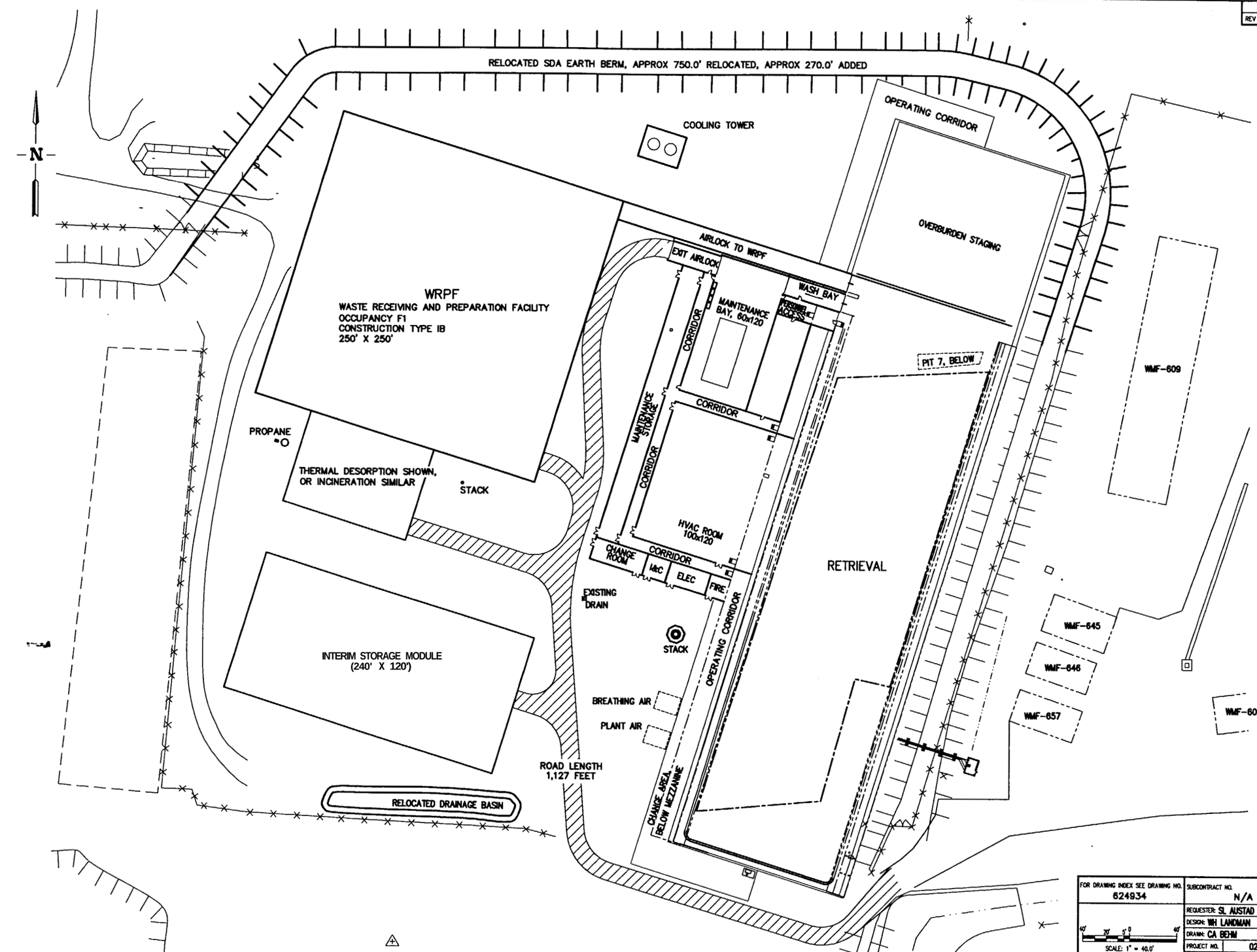


IMPROVED SITE PLAN, OPTION 1

**RELEASED FOR RECORD ONLY**

**DO NOT FABRICATE**

| | | |
|---|---|---|
| FOR DRAWING INDEX SEE DRAWING NO. 624934 | SUBCONTRACT NO. N/A | INEEL BECHTEL BWXT IDAHO, LLC |
| 40' 20' 5' 0 40' SCALE: 1" = 40.0' | REQUESTER: SL AUSTAD | OU 7-10, PIT 9 REMEDIATION PROJECT TREATMENT OPTION 1 |
| | DESIGN: WH LANDMAN | |
| | DRAWN: CA BEHM | |
| | PROJECT NO. 023203 | |
| | SPCL CODE REC REL | IMPROVED SITE PLAN |
| DESIGN PHASE: PRE CON | FOR REVIEW/APPROVAL SIGNATURES SEE DAR NO. 104771 | SIZE D · CAGE CODE 01MF3 · INDEX CODE NUMBER AREA 098 TYPE 0100 CL 02 ORG 090 · DWG-624936 · REV |
| SAFETY CATEGORY: N/A | EFFECTIVE DATE: 9-30-2003 | SCALE: 1"=40.0' · SHEET 1-C-2 |

Date: 09/29/03 - 3:28 P.M. | Layout Name: NEW | ID: ABE

624936.dwg

| REVISIONS | | |
|---|---|---|
| REV | DESCRIPTION | EFFECTIVE DATE: |

# WASTE RECEIVING AND PREPARATION FACILITY, WRPF

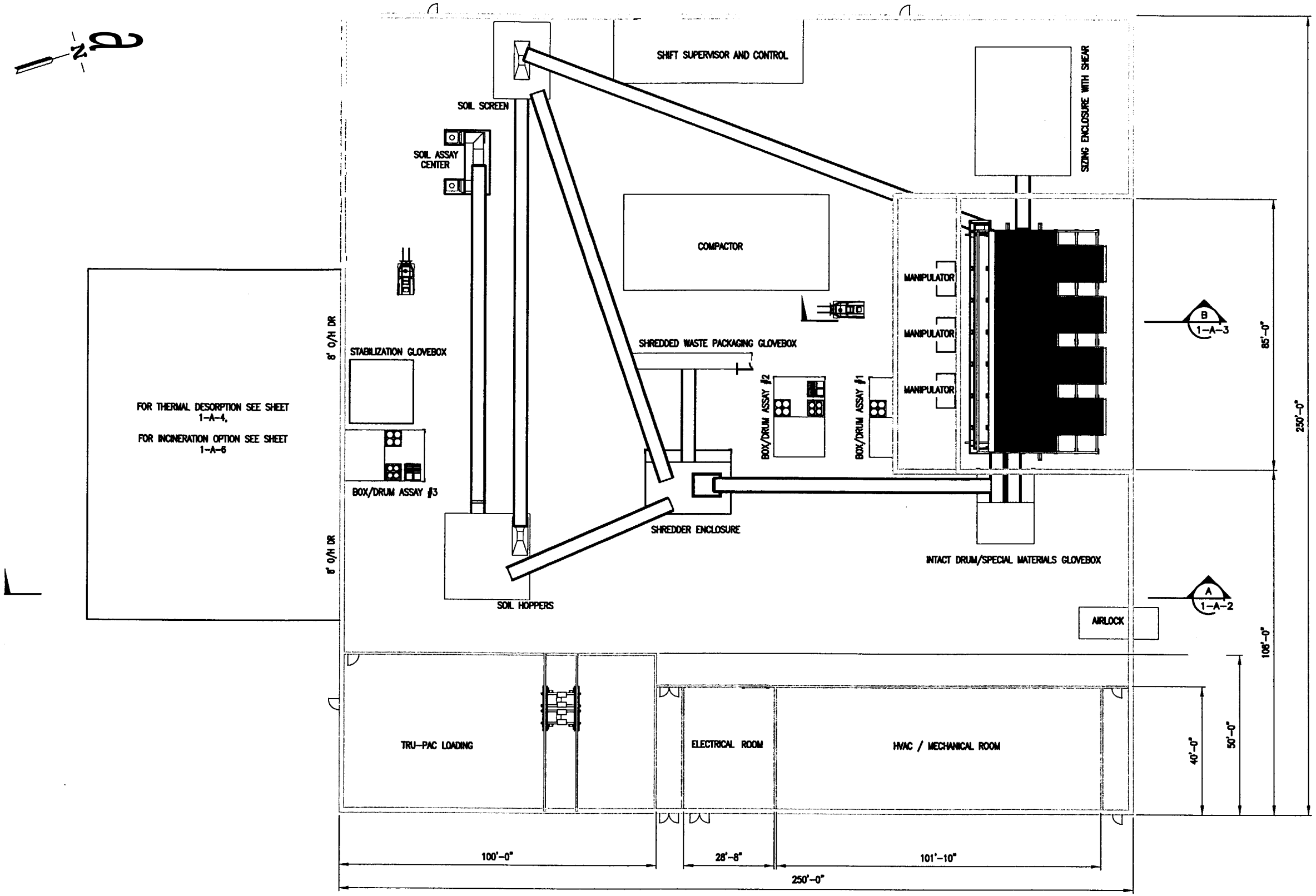


FLOOR PLAN

**RELEASED FOR RECORD ONLY**

**DO NOT FABRICATE**

| | | |
|---|---|---|
| FOR DRAWING INDEX SEE DRAWING NO. 624934 | SUBCONTRACT NO. N/A | INEEL (Idaho National Engineering & Environmental Laboratory) LOCKHEED MARTIN IDAHO, LLC |
| SCALE: 1/16" = 1'-0" | REQUESTER: S.L. AUSTAD | OU 7-10, PIT 9 REMEDIATION PROJECT TREATMENT OPTION 1 COMPACT ALL WITH THERMAL DESORPTION FLOOR PLAN |
| | DESIGN: WM. LANDMAN | |
| | DRAWN: L.M. WHITEHEAD | |
| | PROJECT NO. 023203 | |
| | SPCL CODE REC REL | |
| DESIGN PHASE: PRE CON | FOR REVIEW/APPROVAL SIGNATURES SEE DAR NO. 104771 | SIZE D · CAGE CODE 01MF3 · INDEX CODE NUMBER AREA 098 TYPE 9999 CL 00 DBG 090 · DWG-624937 · REV |
| SAFETY CATEGORY: N/A | EFFECTIVE DATE: 9-30-2003 | SCALE: 1/16" = 1'-0" · SHEET 1-A-1 |

ID: ABE | Layout Name: A-1 | Date: 09/17/03 - 09:56 A.M. | 624937.dwg | T:\REV_0_RR_TREAT

| REV | DESCRIPTION | EFFECTIVE DATE: |
|---|---|---|
| | | |

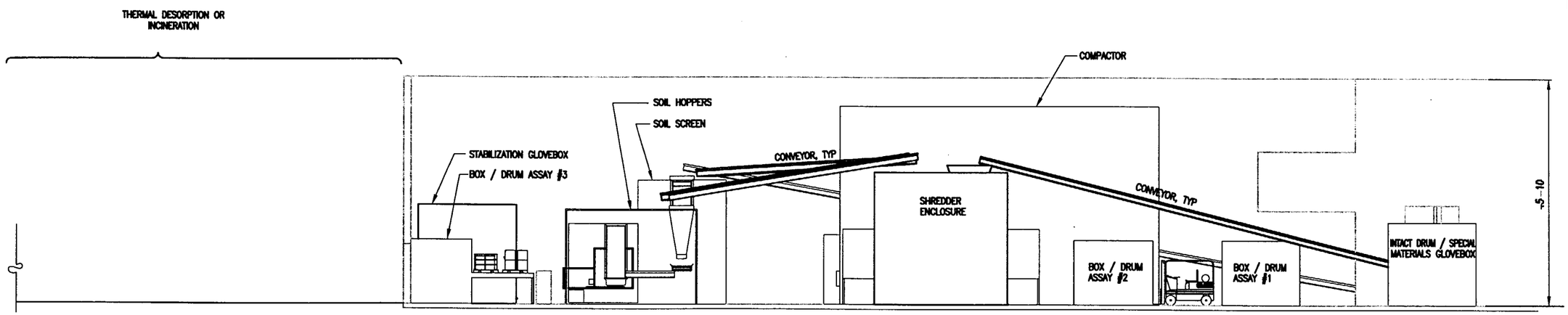


SECTION A 1-A-1

**RELEASED FOR RECORD ONLY**

**DO NOT FABRICATE**

| | | |
|---|---|---|
| FOR DRAWING INDEX SEE DRAWING NO. 624934 | SUBCONTRACT NO. N/A | INEEL (Idaho National Engineering & Environmental Laboratory) BECHTEL BWXT IDAHO, LLC |
| 1' 0 1' 2' 3' 4' 5' 10' 20' SCALE: 3/32" = 1'-0" | REQUESTER: S.L. AUSTAD<br>DESIGN: WM. LANDMAN<br>DRAWN: L.M. WHITEHEAD<br>PROJECT NO. 023203<br>SPCL CODE REC REL | OU 7-10, PIT 9 REMEDIATION PROJECT<br>TREATMENT<br>OPTION 1<br>COMPACT ALL WITH THERMAL DESORPTION<br>SECTION |
| DESIGN PHASE: PRE CON | FOR REVIEW/APPROVAL SIGNATURES SEE DAR NO. 104771 | SIZE D · CAGE CODE 01MF3 · INDEX CODE NUMBER AREA 098 TYPE 9999 CL 00 SEQ 090 · DWG-624938 · REV |
| SAFETY CATEGORY: N/A | EFFECTIVE DATE: 9-30-2003 | SCALE: 3/32" = 1'-0" · SHEET 1-A-2 |

Date: 06/17/03 - 09:31 A.M. | Layout Name: A-2 ID: ABE

| REVISIONS | | |
|---|---|---|
| REV | DESCRIPTION | EFFECTIVE DATE: |

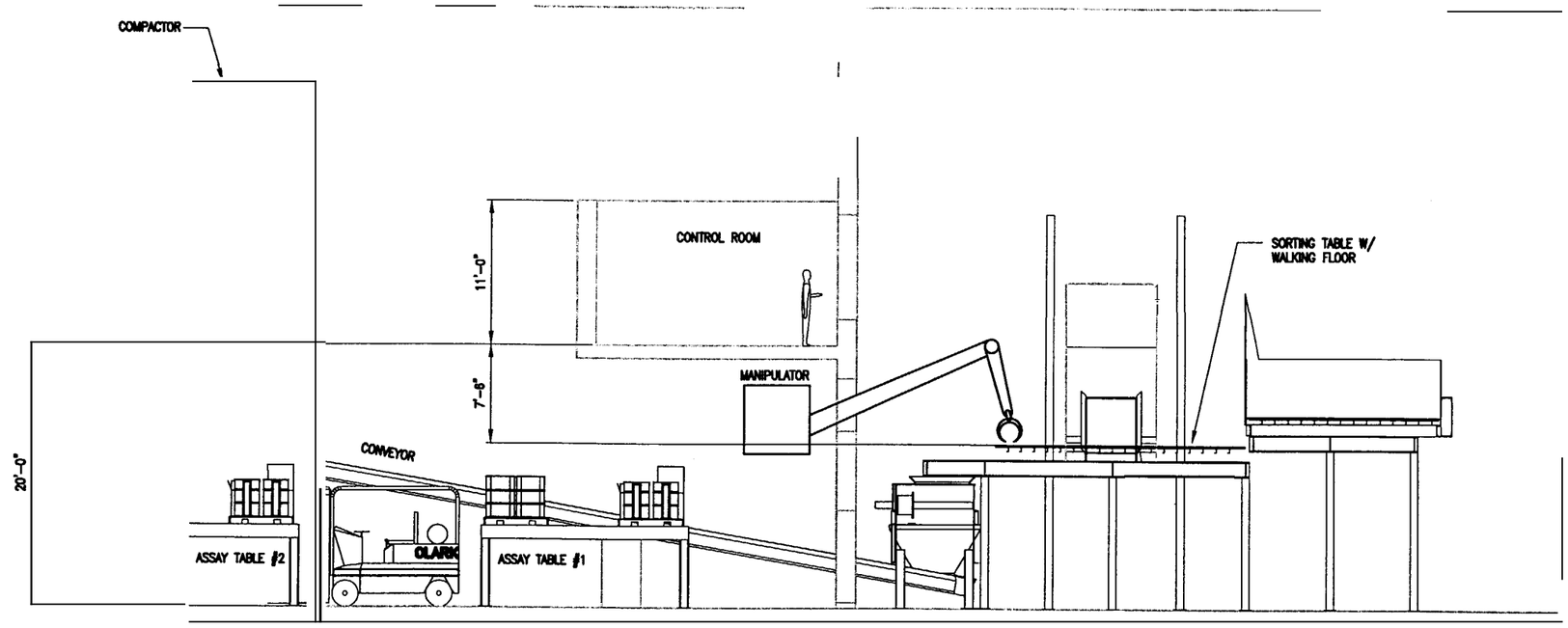


SECTION B 1-A-1

**RELEASED**
**FOR RECORD ONLY**

**DO NOT FABRICATE**

| | | |
|---|---|---|
| FOR DRAWING INDEX SEE DRAWING NO. 624934 | SUBCONTRACT NO. N/A | INEEL (Idaho National Engineering & Environmental Laboratory) BECHTEL BWXT IDAHO, LLC |
| SCALE: 3/32" = 1'-0" | REQUESTER: S.L. AUSTAD | OU 7-10, PIT 9 REMEDIATION PROJECT TREATMENT OPTION 1 COMPACT ALL WITH THERMAL DESORPTION SECTION |
| | DESIGN: WM. LANDMAN | |
| | DRAWN: L.M. WHITEHEAD | |
| | PROJECT NO. 023203 | |
| | SPCL CODE REC REL | |
| DESIGN PHASE: PRE CON | FOR REVIEW/APPROVAL SIGNATURES SEE DAR NO. 104771 | SIZE D · CAGE CODE 01MF3 · INDEX CODE NUMBER AREA 098 TYPE 9999 CL 00 ORG 090 · DWG-624939 · REV |
| SAFETY CATEGORY: N/A | EFFECTIVE DATE: 9-30-2003 | SCALE: 3/16" = 1'-0" · SHEET 1-A-3 |

Date: 09/17/03 - 09:31 AM | Layout Name: A-3

| REV | DESCRIPTION | EFFECTIVE DATE: |
|---|---|---|

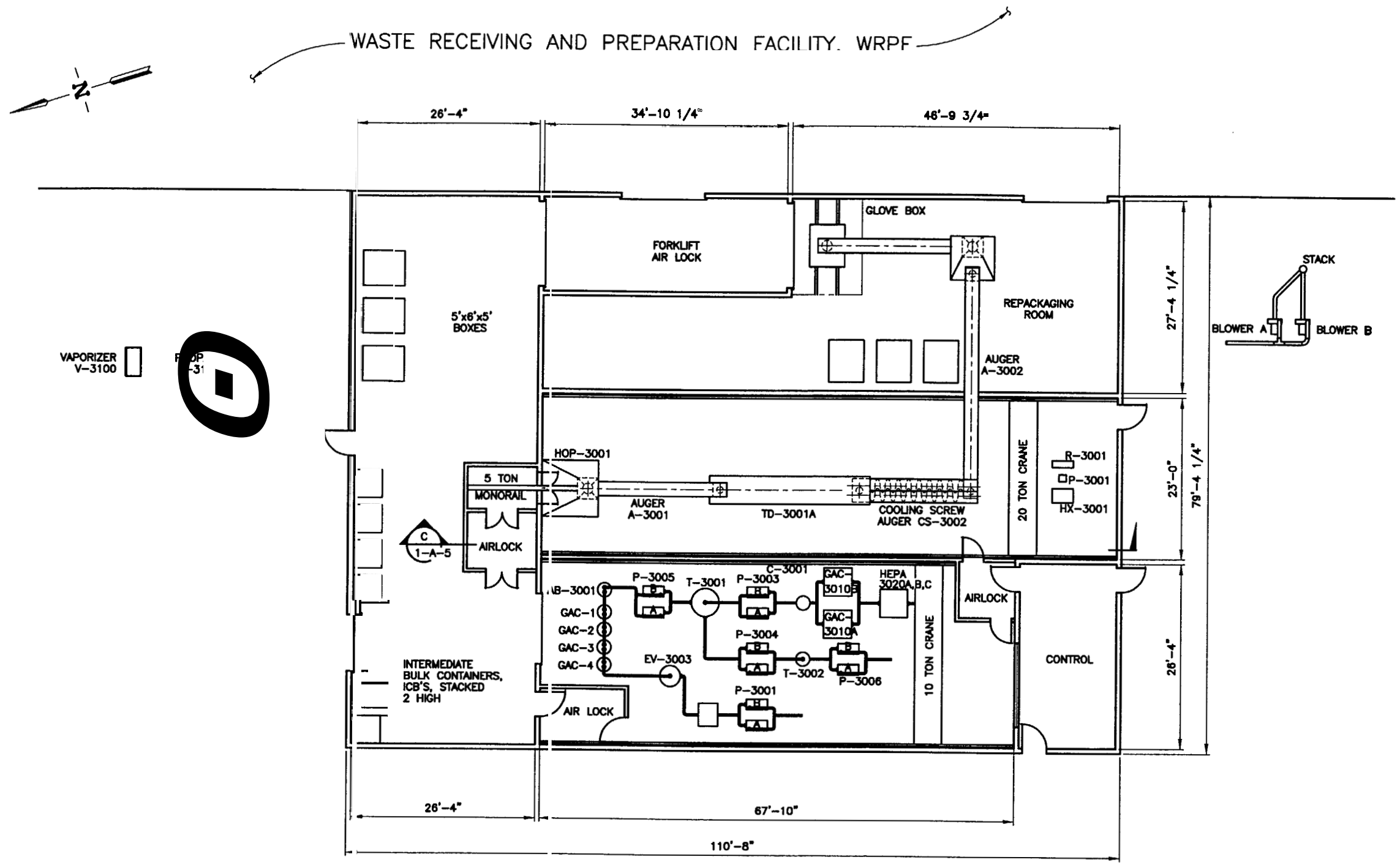


FLOOR PLAN

**RELEASED FOR RECORD ONLY**

**DO NOT FABRICATE**

| | | |
|---|---|---|
| FOR DRAWING INDEX SEE DRAWING NO. 624934 | SUBCONTRACT NO. N/A | INEEL |
| SCALE: 1/8" = 1'-0" | REQUESTER: W.H.LANDMAN | OU 7-10, PIT 9 REMEDIATION PROJECT TREATMENT OPTION 1 SEGREGATE AND THERMAL DESORPTION FLOOR PLAN |
| | DESIGN: N.E.RUSSELL | |
| | DRAWN: R.G.Street | |
| | PROJECT NO. 023203 | |
| | SPCL CODE REC REL | |
| DESIGN PHASE: PRE CON | FOR REVIEW/APPROVAL SIGNATURES SEE DAR NO. 104771 | SIZE D; CAGE CODE 01MF3; INDEX CODE NUMBER AREA 098 TYPE 9999 CL 00 ORG 090; DWG- 624940; REV |
| SAFETY CATEGORY: N/A | EFFECTIVE DATE: 9-30-2003 | SCALE: 1/8" = 1'-0"; SHEET 1-A-4 |

| REVISIONS | | |
|---|---|---|
| REV | DESCRIPTION | EFFECTIVE DATE: |

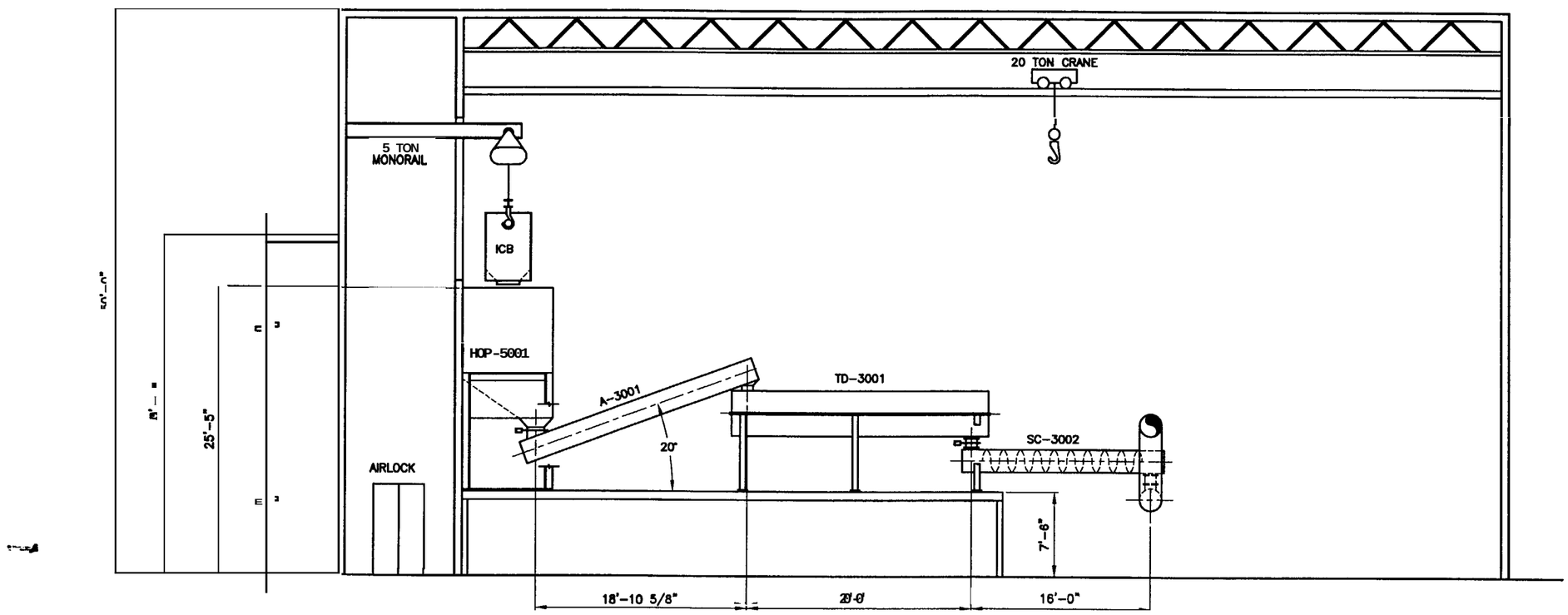


SECTION C 1-A-4

**RELEASED FOR RECORD ONLY**

**DO NOT FABRICATE**

| | | |
|---|---|---|
| FOR DRAWING INDEX SEE DRAWING NO. 624934 | SUBCONTRACT NO. N/A | INEEL |
| SCALE: 3/16" = 1'-0" | REQUESTER: SL AUSTAD<br>DESIGN: W.H.LANDMAN<br>DRAWN: R.G.Street<br>PROJECT NO. 023203<br>SPCL CODE REC REL | OU 7-10, PIT 9 REMEDIATION PROJECT<br>TREATMENT<br>OPTION 1<br>COMPACT ALL WITH THERMAL DESORPTION<br>SECTION |
| DESIGN PHASE: PRE CON | FOR REVIEW/APPROVAL SIGNATURES SEE DAR NO. 104771 | SIZE D · CAGE CODE 01MF3 · INDEX CODE NUMBER AREA 098 TYPE 9999 CL 00 ORG 090 · DWG-624941 · REV |
| SAFETY CATEGORY: N/A | EFFECTIVE DATE: 9-30-2003 | SCALE: 3/16" = 1'-0" · SHEET 1-A-5 |

Date: 09/29/03 - 3:43 P.M. | Layout Name: Section B | ID: ABE

624941.dwg
TREAT

| REVISIONS | | |
|---|---|---|
| REV | DESCRIPTION | EFFECTIVE DATE: |

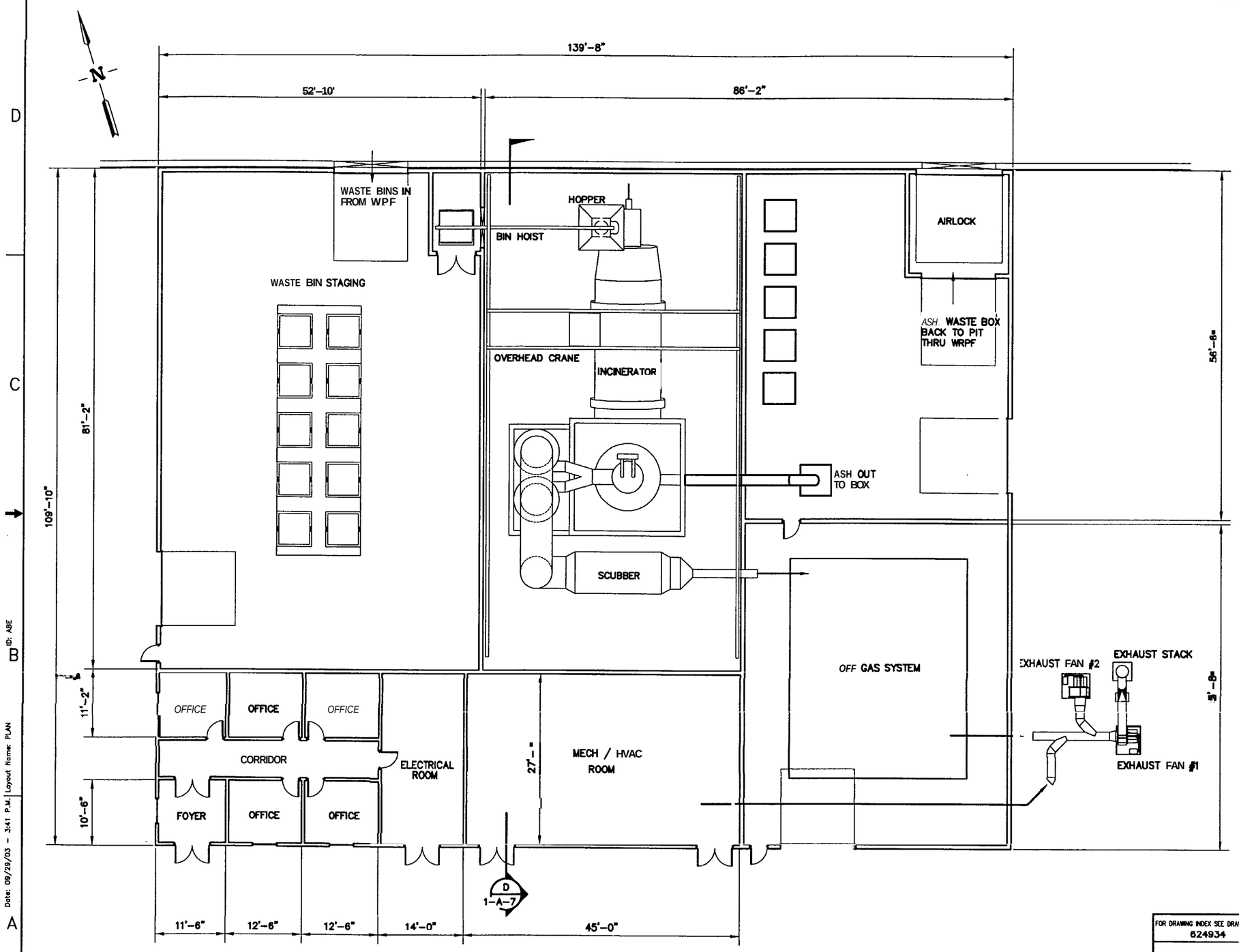


FLOOR PLAN
SCALE: 1/8" = 1'-0"

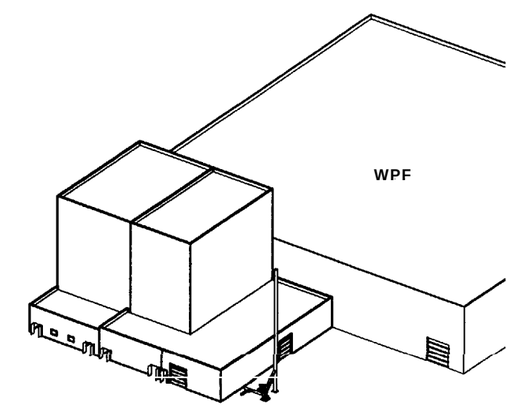


LOOKING NORTH
ISOMETRIC VIEW
NTS

**RELEASED FOR RECORD ONLY**

**DO NOT FABRICATE**

| | | |
|---|---|---|
| FOR DRAWING INDEX SEE DRAWING NO. 624934 | SUBCONTRACT NO. N/A | INEEL (Idaho National Engineering & Environmental Laboratory) BECHTEL BWXT IDAHO, LLC |
| SCALE: 1/8" = 1'-0" | REQUESTER: SL AUSTAD<br>DESIGN: WH LANDMAN<br>DRAWN: CA BEHM | OU 7-10, PIT 9 REMEDIATION PROJECT<br>TREATMENT<br>OPTION 1<br>COMPACT ALL WITH INCINERATION<br>PLAN AND ISOMETRIC VIEW |
| | PROJECT NO. 023203<br>SPCL CODE REC REL | |
| DESIGN PHASE: PRE CON | FOR REVIEW/APPROVAL SIGNATURES SEE DAR NO. 104771 | SIZE D · CAGE CODE 01MF3 · INDEX CODE NUMBER AREA 098 TYPE 9999 CL 00 ORG 090 · DWG-624942 · REV |
| SAFETY CATEGORY: N/A | EFFECTIVE DATE: 9-30-2003 | SCALE: NOTED · SHEET 1-A-6 |

Date: 08/29/03 - 3:41 P.M. | Layout Name: PLAN | ID: ABE

e: 624942.dwg
ath: T:\REV_9_RR_TREAT

| REVISIONS | | |
|---|---|---|
| REV | DESCRIPTION | EFFECTIVE DATE: |

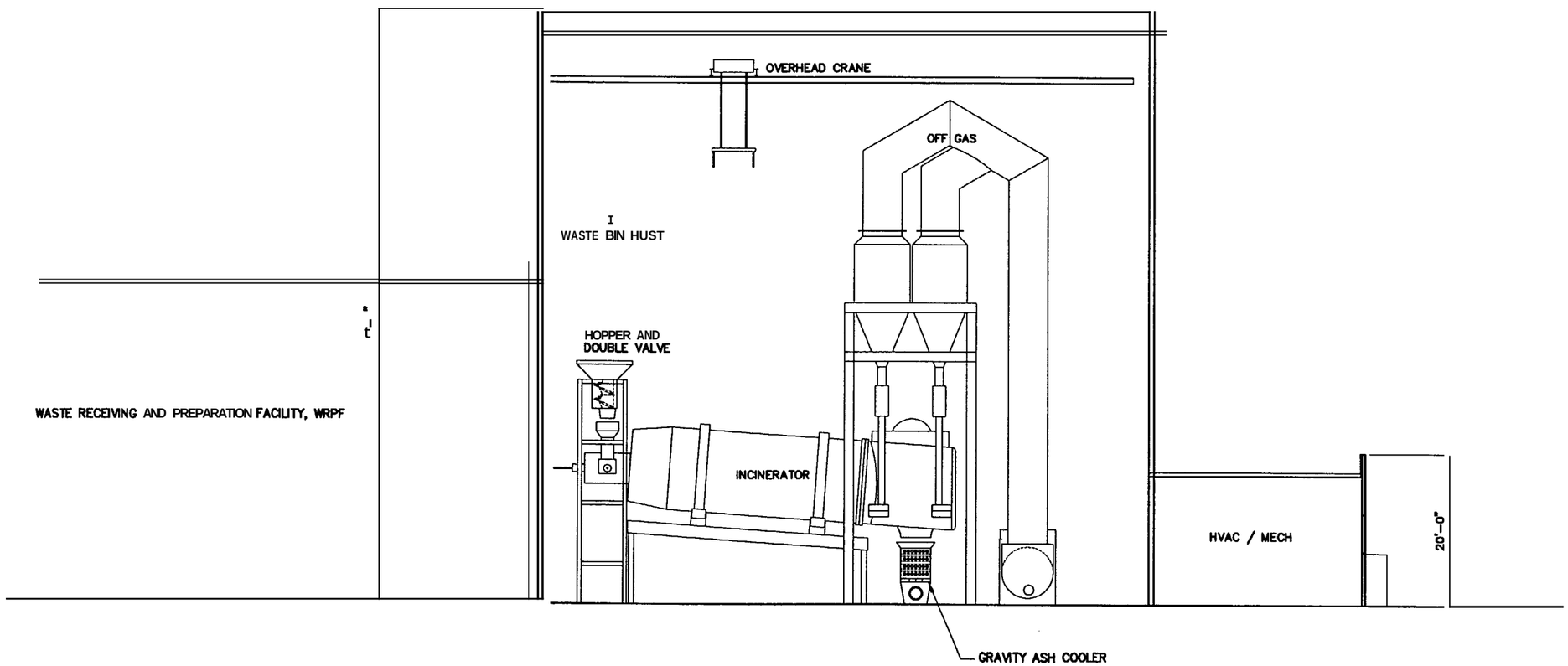


SECTION D 1-A-6

**RELEASED FOR RECORD ONLY**

**DO NOT FABRICATE**

| | | |
|---|---|---|
| FOR DRAWING INDEX SEE DRAWING NO. 624934 | SUBCONTRACT NO. N/A | INEEL (Idaho National Engineering & Environmental Laboratory) BECHTEL BWXT IDAHO, LLC |
| SCALE: 1/8" = 1'-0" | REQUESTER: SL AUSTAD | OU 7-10, PIT 9 REMEDIATION PROJECT TREATMENT OPTION 1 COMPACT ALL WITH INCINERATION SECTION |
| | DESIGN: WH LANDMAN | |
| | DRAWN: CA BEHM | |
| | PROJECT NO. 023203 | |
| | SPCL CODE REC REL | |
| DESIGN PHASE: PRE CON | FOR REVIEW/APPROVAL SIGNATURES SEE DAR NO. 104771 | SIZE D · CAGE CODE 01MF3 · INDEX CODE NUMBER AREA 098 TYPE 9999 Q 00 ORG 090 · DWG-624943 · REV |
| SAFETY CATEGORY: N/A | EFFECTIVE DATE: 9-30-2003 | SCALE: 1/8" = 1'-0" · SHEET 1-A-7 |

ID: ABE
Date: 08/29/03 - 3:41 P.M. | Layout Name: SECTION
624943.dwg

REVISIONS

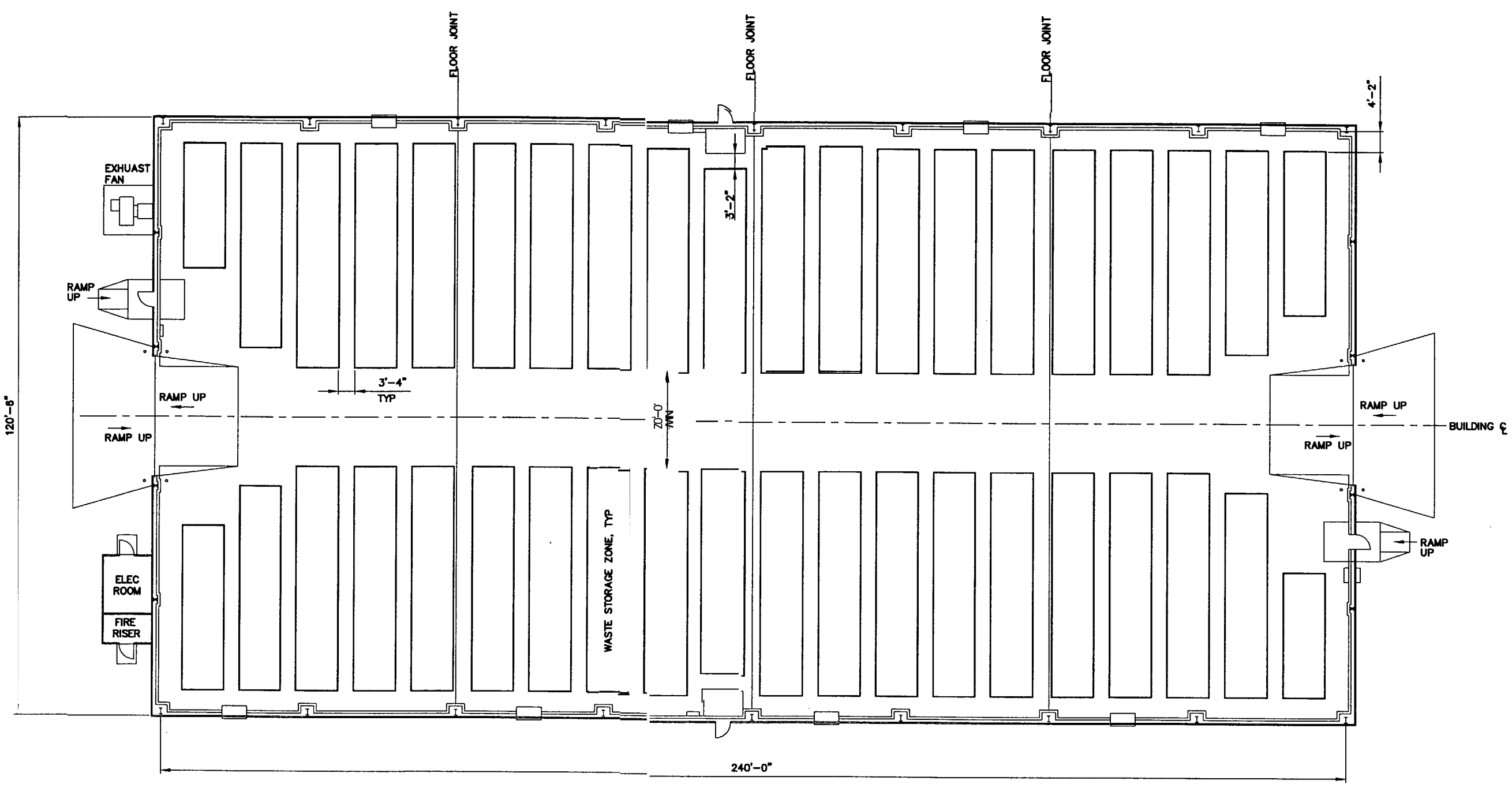


INTERIM STORAGE FACILITY PLAN

**RELEASED FOR RECORD ONLY**

***DO NOT FABRICATE***

| | | |
|---|---|---|
| FOR DRAWING INDEX SEE DRAWING NO. 624934 | SUBCONTRACT NO. N/A | INEEL (Idaho National Engineering & Environmental Laboratory) BECHTEL BWXT IDAHO, LLC |
| SCALE: 3/32" = 1'-0" | REQUESTER: SL AUSTAD | OU 7-10, PIT 9 REMEDIATION PROJECT TREATMENT OPTION 1 |
| | DESIGN: WH LANDMAN | |
| | DRAWN: CA BEHM | |
| | PROJECT NO. 023203 | INTERIM STORAGE FACILITY PLAN |
| | SPCL CODE REC REL | |
| DESIGN PHASE: PRE-CON | FOR REVIEW/APPROVAL SIGNATURES SEE DAR NO. 104771 | SIZE D · CAGE CODE 01MF3 · INDEX CODE NUMBER AREA 098 TYPE 9999 CL 00 ORG 090 · DWG-624944 · REV |
| SAFETY CATEGORY: N/A | EFFECTIVE DATE: 9-30-2003 | SCALE: 3/32" = 1'-0" · SHEET 1-A-8 |

Layout Name: Layout1 Date: 09/30/03 - 11:36 A.M. ID: Abt.

Path: T:\REV_0_RR_TREAT

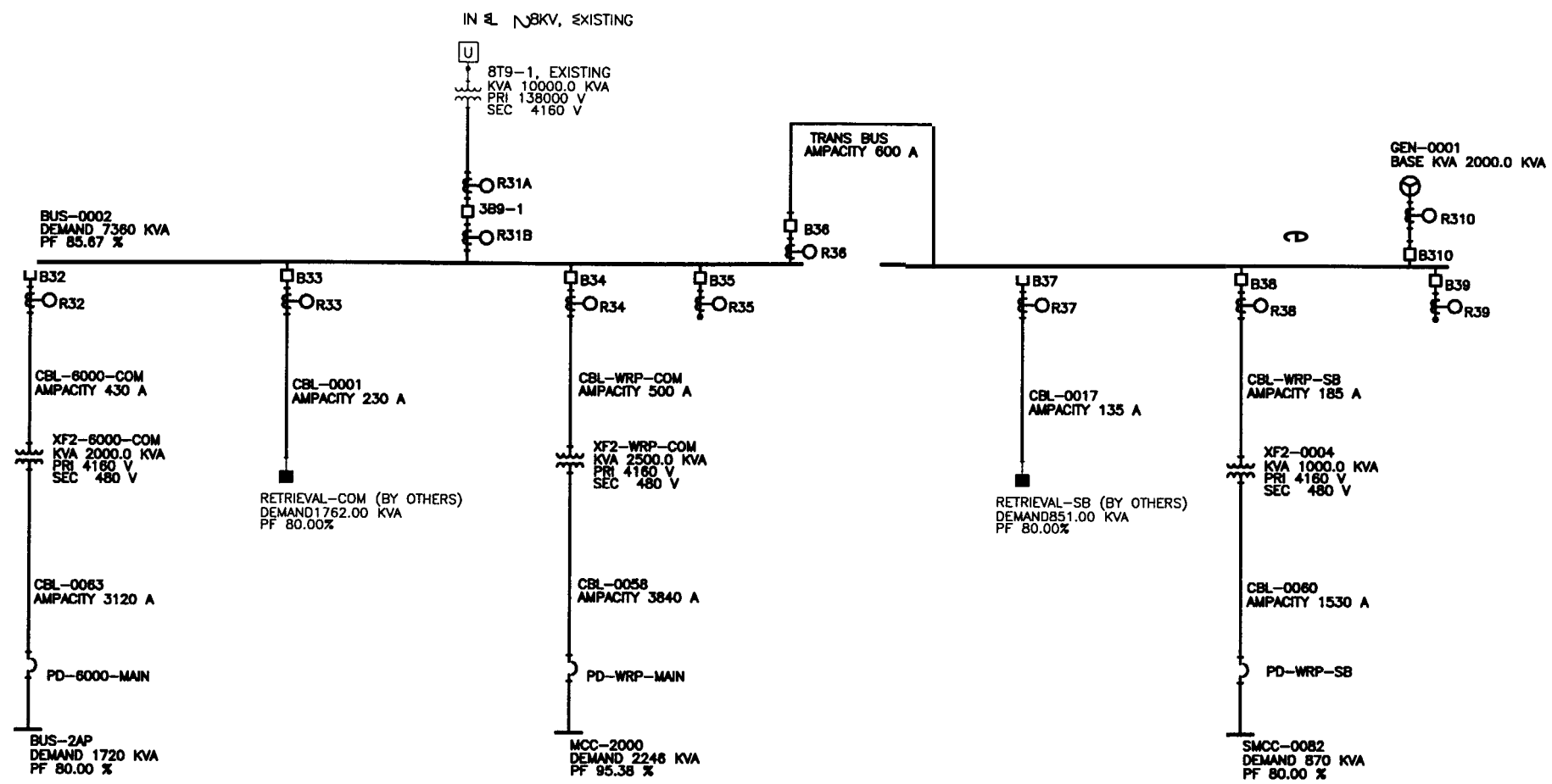


OPTION 1

ONELINE DIAGRAM, 2 AP

**RELEASED**
**FOR RECORD ONLY**
**DO NOT FABRICATE**

| | | |
|---|---|---|
| FOR DRAWING INDEX SEE DRAWING NO. 624934 | SUBCONTRACT NO. N/A | INEEL (Idaho National Engineering & Environmental Laboratory) BECHTEL BWXT IDAHO, LLC |
| NO SCALE | REQUESTER: SL AUSTAD<br>DESIGN: BL COWLEY<br>DRAWN: BL COWLEY<br>PROJECT NO. 023203<br>SPCL CODE REC REL | OU 7-10, PIT 9 REMEDIATION PROJECT<br>TREATMENT<br>OPTION 1<br>ELECTRICAL ONELINE DIAGRAM, 2AP |
| DESIGN PHASE: PRE-CON | FOR REVIEW/APPROVAL SIGNATURES SEE DAR NO. 104771 | SIZE D · CAGE CODE 01MF3 · INDEX CODE NUMBER AREA 098 TYPE 9999 CL 10 ORG 090 · DWG-624945 · REV |
| SAFETY CATEGORY: N/A | EFFECTIVE DATE: 9-30-2003 | SCALE: NONE · SHEET 1-E-1 |

Date: 09/29/03 - 3:38 P.M. | Layout Name: Layout1 | ID: ABE

| REVISIONS | | |
|---|---|---|
| REV | DESCRIPTION | EFFECTIVE DATE: |

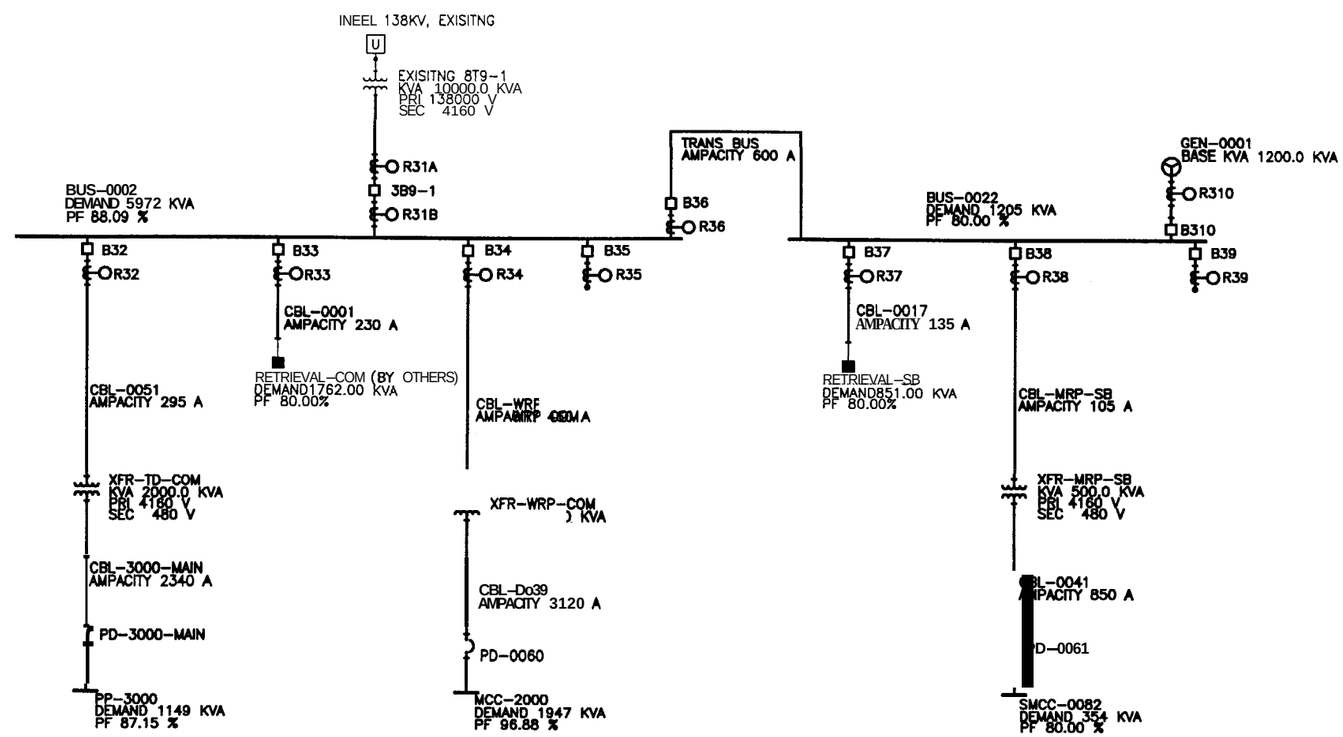


OPTION 1

ONELINE **DIAGRAM, 3AP**

**RELEASED**
**FOR RECORD ONLY**
**DO NOT FABRICATE**

| | | |
|---|---|---|
| FOR DRAWING INDEX SEE DRAWING NO. 624934 | SUBCONTRACT NO. N/A | INEEL (Idaho National Engineering & Environmental Laboratory) BECHTEL BWXT IDAHO, LLC |
| NO SCALE | REQUESTER: SL AUSTAD<br>DESIGN: BL COWLEY<br>DRAWN: BL COWLEY<br>PROJECT NO. 023203<br>SPCL CODE REC REL | OU 7-10, PIT 9 REMEDIATION PROJECT<br>TREATMENT<br>OPTION 1<br>ELECTRICAL ONELINE DIAGRAM, 3AP |
| DESIGN PHASE: PRE-CON | FOR REVIEW/APPROVAL SIGNATURES SEE DAR NO. 104771 | SIZE D · CAGE CODE 01MF3 · INDEX CODE NUMBER AREA 098 TYPE 9999 CL 10 ORG 090 · DWG-624946 · REV |
| SAFETY CATEGORY: N/A | EFFECTIVE DATE: 9-30-2003 | SCALE: NONE · SHEET 1-E-2 |

ID: ABE
Date: 09/29/03 - 3:35 P.M. | Layout Name: Layout1
624946.dwg
T:\REV_0_RR_TREAT

| REVISIONS | | |
|---|---|---|
| REV | DESCRIPTION | EFFECTIVE DATE: |

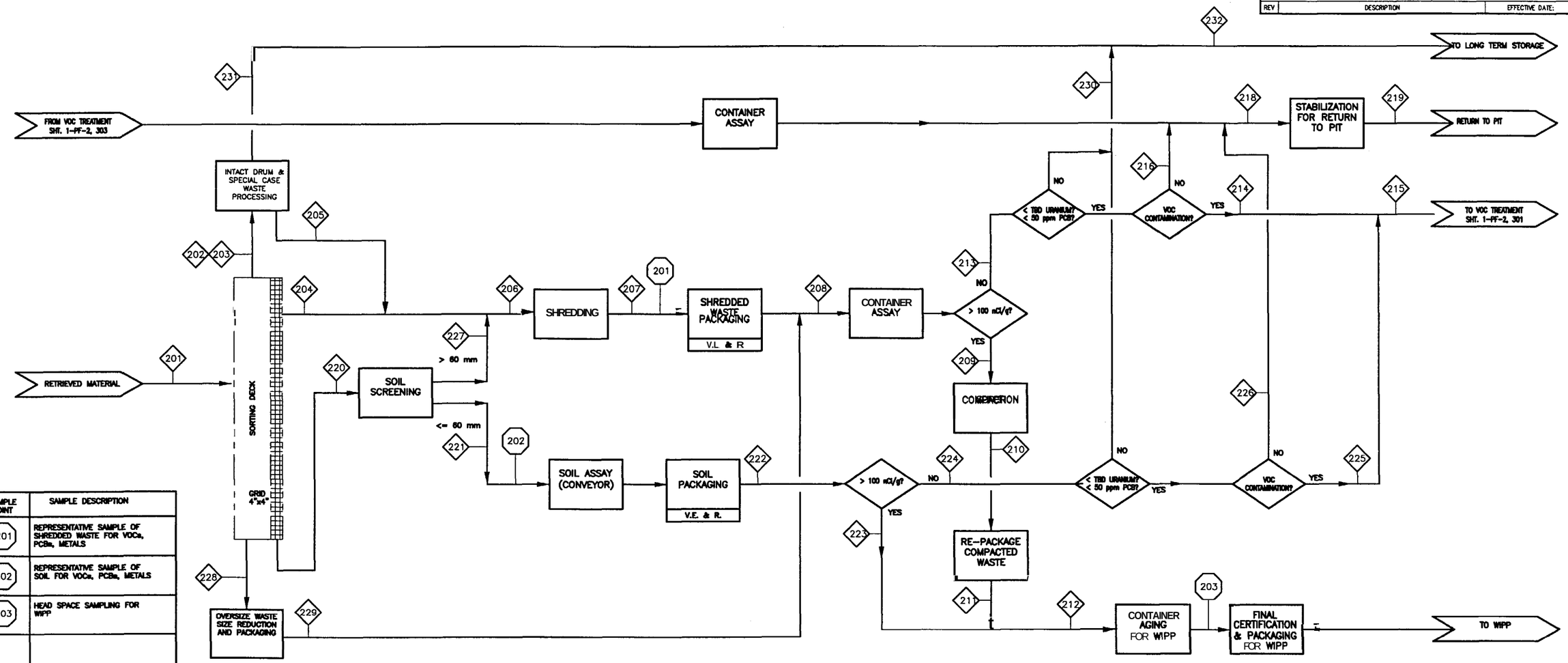


| SAMPLE POINT | SAMPLE DESCRIPTION |
|---|---|
| 201 | REPRESENTATIVE SAMPLE OF SHREDDED WASTE FOR VOCs, PCBs, METALS |
| 202 | REPRESENTATIVE SAMPLE OF SOIL FOR VOCs, PCBs, METALS |
| 203 | HEAD SPACE SAMPLING FOR WIPP |
| | |

| | 201 | 202 | 203 | 204 | 205 | 206 | 207 | 208 | 209 | 210 | 211 | 212 | 213 | 214 | 215 |
|---|---|---|---|---|---|---|---|---|---|---|---|---|---|---|---|
| | RETRIEVED MATERIAL | INTACT DRUMS | SPECIAL CASE WASTE | LOOSE WASTE | WASTE FROM INTACT DRUMS | WASTE TO SHREDDER | SHREDDED WASTE | PACKAGED WASTE | PACKAGED WASTE >100nCi/g | COMPACTED WASTE >100nCi/g | COMPACTED REPACKAGED WASTE | MATERIAL TO WIPP | PACKAGED WASTE <=100nCi/g | PACKAGED WASTE TO TD | TOTAL TO TD |
| TOTAL MASS (KG) | 20,000,000 | TBD | TBD | TBD | TBD | 1,090,000 | 1,090,000 | 1,310,000 | 654,000 | 719,000 | 719,000 | 10,620,000 | 654,000 | 0 | 9,900,000 |
| TOTAL VOLUME (M3) | 18,900 | TBD | TBD | TBD | TBD | 3,740 | 1,870 | 2,240 | 1,120 | TBD | 560 | 9,660 | 1,120 | 0 | 9,100 |
| NUMBER OF CONTAINERS | TBD | TBD | N.A. | N.A. | N.A. | N.A. | N.A. | 10,800 LINERS | 5,400 LINERS | N.A. | 2,690 DRUMS | 11,200 DRUMS & INSERTS | 5,400 LINERS | 0 | 8,500 INSERTS OR TBD TOTES |
| PROCESSING RATE | 1.97 M3/HR | TBD | TBD | TBD | TBD | TBD | – | – | – | | | | – | | 1,030 KG/HR |

| | 216 | 217 | 218 | 219 | 220 | 221 | 222 | 223 | 224 | 225 | 226 | 227 | 228 | 229 | 230 | 231 | 232 |
|---|---|---|---|---|---|---|---|---|---|---|---|---|---|---|---|---|---|
| | NON-VOC NON-TRU WASTE | | TOTAL FOR STABILIZATION | STABILIZED MATERIAL TO PIT | SOIL, SLUDGE & MISC DEBRIS | SCREENED SOIL & SLUDGE | PACKAGED SOIL & SLUDGE | PACKAGED SOIL >100 nCi/g | PACKAGED SOIL <=100 nCi/g | VOC SOIL & SLUDGE TO TD | NON-VOC SOIL | SCREENED DEBRIS | OVERSIZE MAT'L | PACKAGED SIZED MAT'L | PCB, URANIUM CONTAMINATED MATERIAL | SPECIAL CASE WASTE | TOTAL TO LONG TERM STORAGE |
| TOTAL MASS (KG) | 654,000 | | TBD | TBD | 18,900,000 | 18,900,000 | 19,800,000 | 9,900,000 | 9,900,000 | 9,900,000 | 0 | TBD | TBD | TBD | TBD | TBD | TBD |
| TOTAL VOLUME ($M^3$) | 1,120 | | TBD | TBD | 15,100 | 15,100 | 18,200 | 9,100 | 9,100 | 9,100 | 0 | TBD | TBD | TBD | TBD | TBD | TBD |
| NUMBER OF CONTAINERS | 5,400 LINERS | | TBD | TBD | N.A. | N.A. | 17,000 INSERTS | 8,500 INSERTS | 8,500 INSERTS | 8,500 INSERTS OR TBD TOTES | 0 | TBD | TBD | TBD | TBD | TBD | TBD |
| PROCESSING RATE (M3/HR) | | | | | | | | | | | | | | | | | |

## NOTES

1. RETRIEVAL OPERATING BASIS: 12 HRS/DAY.
2. TREATMENT OPERATING BASIS: 2 YRS, 200 DAYS/YR, 24 HRS/DAY.
3. SLUDGE IS ASSUMED TO BE LOOSE AND MIXED WITH SOIL FOR VOLUME AND MASS CALCULATIONS.
4. V.E. & R. = VISUALLY EXAMINE AND RECORD PACKAGING TO MEET WIPP CRITERIA.
5. OVERALL VOLUME REDUCTION OF COMPACTED WASTE, AFTER REPACKAGING, IS 50% OF ORGINAL VOLUME.
6. SOIL IS PACKAGED IN SWB INSERTS, APPROX 48" X 44" X 34"HIGH. INTERNAL VOLUME APPROX 38 CU FT. INSERTS MAY BE CONVERTED TO TOTES FOR TRANSPORT TO TD PROCESS.
7. ALL SOIL <= 100 nCi/g WAS ASSUMED TO CONTAIN VOCs. ALL WASTE <= 100 nCi/g WAS ASSUMED TO FREE OF VOCs.
8. NON-TRU, NON-VOC WASTE OVERPACKED IN BOXES FOR RETURN TO PIT.

**RELEASED FOR RECORD ONLY**

**DO NOT FABRICATE**

| | | |
|---|---|---|
| FOR DRAWING INDEX SEE DRAWING NO. 624934 | SUBCONTRACT NO. N/A | INEEL (Idaho National Engineering & Environmental Laboratory) LOCKHEED MARTIN IDAHO, LLC |
| NO SCALE | REQUESTER: W.H.LANDMAN<br>DESIGN: A.W.DOEHL<br>DRAWN: R.G.Street<br>PROJECT NO. 023203<br>SPCL CODE REC REL | OU 7-10, PIT 9 REMEDIATION PROJECT<br>OPTION 1<br>COMPACT ONLY<br>SORTING AND SEGREGATION<br>PROCESS FLOW DIAGRAM |
| DESIGN PHASE: PRE CON | FOR REVIEW/APPROVAL SIGNATURES SEE DAR NO. 104771 | SIZE D · CAGE CODE 01MF3 · INDEX CODE NUMBER AREA 098 TYPE 9999 CL 28 DSG 090 · DWG- 624947 · REV |
| SAFETY CATEGORY: N/A | EFFECTIVE DATE: 9-30-2003 | SCALE: NONE · SHEET 1-PF-1 |

FMT-01-REV 3.4
Date: 09/30/03 - 1:50 P.M. | Layout Name: Layout1 | ID: ABE
File: 624947.dwg
Path: T:\REV_O_RR_TREAT

| REVISIONS | | |
|---|---|---|
| REV | DESCRIPTION | EFFECTIVE DATE: |

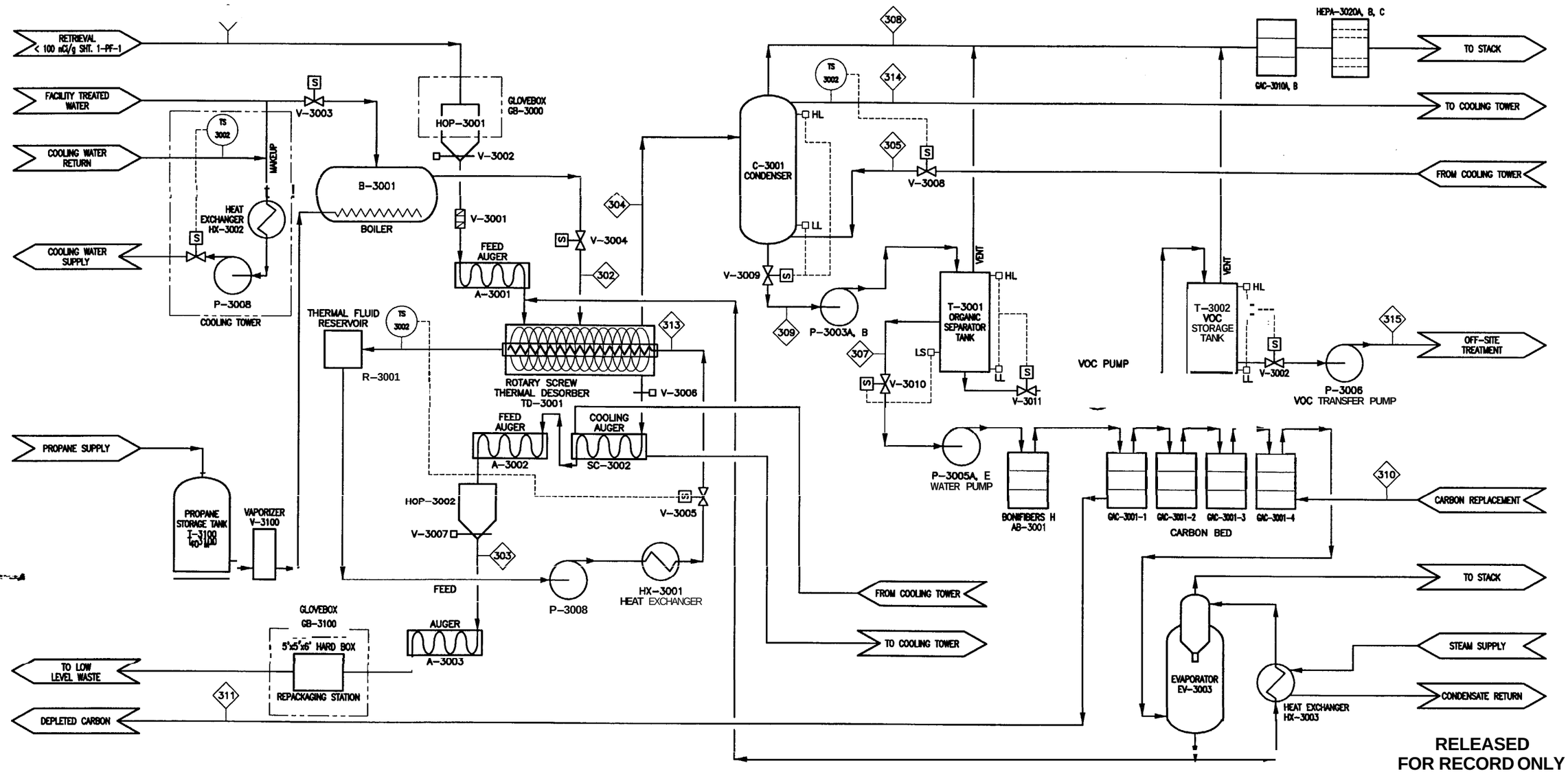


RELEASED
FOR RECORD ONLY

DO NOT FABRICATE

| | 301 | 302 | 303 | 304 | 305 | 306 | 307 | 308 | 309 | 310 | 311 | 312 | 313 | 314 | 315 |
|---|---|---|---|---|---|---|---|---|---|---|---|---|---|---|---|
| | SOIL DEBRIS | STEAM SWEEP GAS | TD SOIL | STEAM AND VOC | COOLING WATER SUPPLY | VOC'S | WATER AND SOLUBLE ORGANICS | CONDENSATE OFF GAS | CONDENSATE LIQUIDS | CARBON REPLACEMENT | CARBON DEPLETION | WATER | | COOLING WATER RETURN | VOC'S OFF-SITE TREATMENT |
| FLOW RATE (KG/HR) | 983 | 39 | 716 | 311 | TBD | 18 | 293 | TBD | 311 | 14 | 10 | 292 | | TBD | 18 |
| TEMPERATURE (°C) | 15 | 200 | 38 | 150 | 15 | 30 | 30 | 50 | 90 | | | 30 | 200 | 150 | 30 |
| | | | | | | | | | | | | | | | |
| | | | | | | | | | | | | | | | |

| | | |
|---|---|---|
| FOR DRAWING INDEX SEE DRAWING NO. 624934 | SUBCONTRACT NO. N/A | INEEL Idaho National Engineering & Environmental Laboratory LOCKHEED MARTIN IDAHO, LLC |
| NO SCALE | REQUESTER: W.H.LANDMAN<br>DESIGN: G.H.ULET<br>DRAWN: R.G.Street<br>PROJECT NO. 023203<br>SPCL CODE REC REL | OU 7-10, PIT 9 REMEDIATION PROJECT<br>TREATMENT<br>ALL OPTIONS<br>NON-TRU THERMAL DESPORPTION<br>PROCESS FLOW DIAGRAM |
| DESIGN PHASE: PRE CON<br>SAFETY CATEGORY: N/A | FOR REVIEW/APPROVAL SIGNATURES SEE DAR NO. 104771<br>EFFECTIVE DATE: 9-30-2003 | SIZE D; CAGE CODE 01MF3; INDEX CODE NUMBER AREA 098 TYPE 9999 CL 28 ORG 090; DWG- 624948; REV<br>SCALE: NONE; SHEET 1-PF-2 |

Date: 09/29/03 - 3:29 P.M. | Layout Name: Layout1 | ID: ABE

| REVISIONS | | |
|---|---|---|
| REV | DESCRIPTION | EFFECTIVE DATE: |

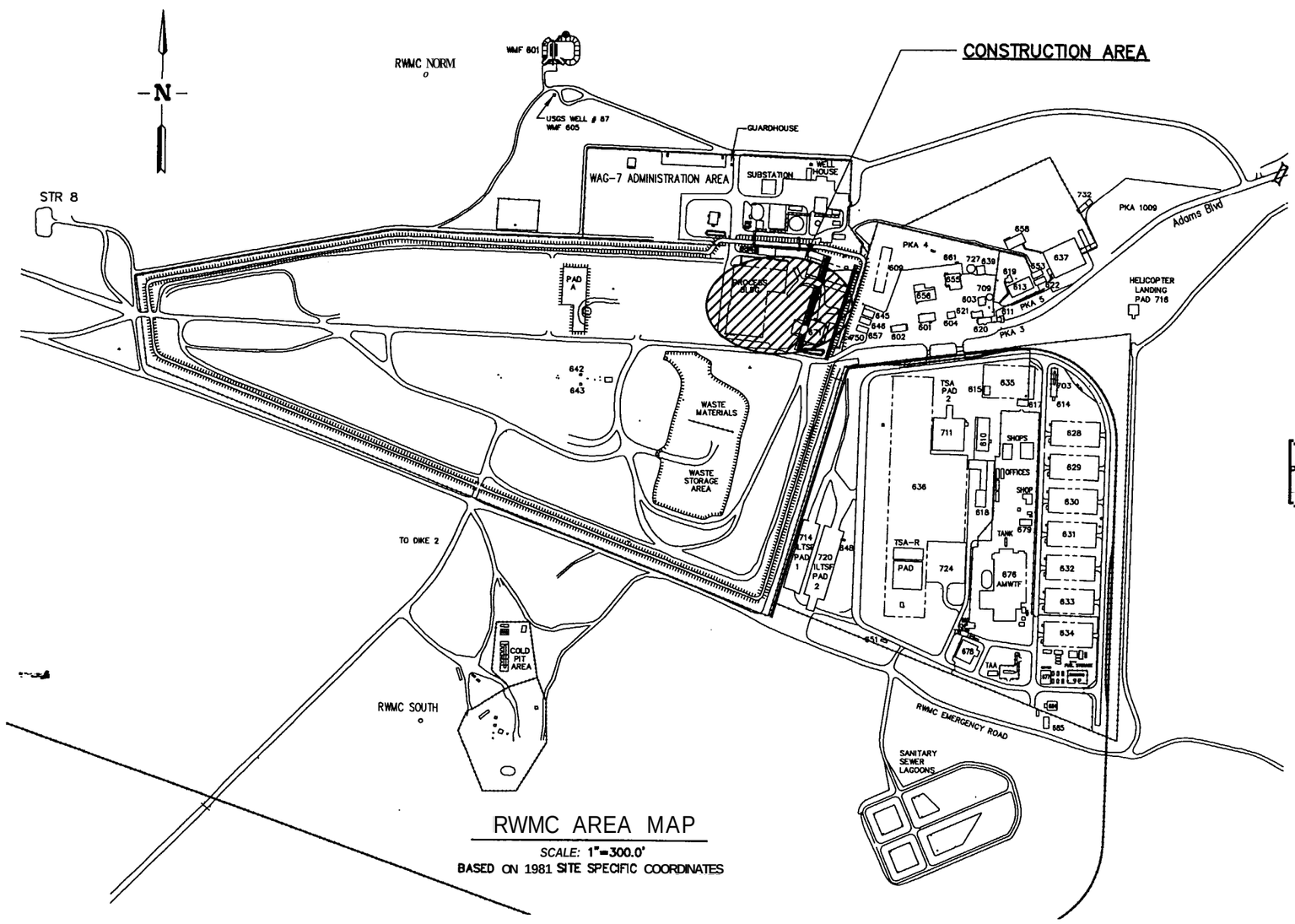


## RWMC AREA MAP

SCALE: 1"=300.0'
BASED ON 1981 SITE SPECIFIC COORDINATES

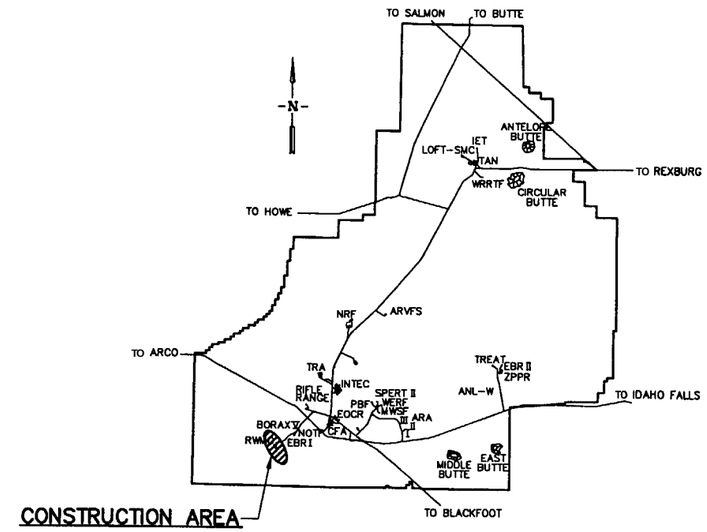


## INEEL SITE MAP

SCALE: NONE

## DRAWING INDEX

| PAGE NO. | DWG NO. | A-E DWG NO. | REV | DRAWING TITLE |
|---|---|---|---|---|
| 1 | 624949 | 2B-T-1 | | SITE MAP. AREA MAP AND DRAWING INDEX |
| 2 | 624950 | 2B-C-1 | | EXISTING SITE PLAN |
| 3 | 824951 | 2B-C-2 | | IMPROVED SITE PUN |
| 4 | 624952 | 2B-A-1 | | WASTE RECEIVING AND PACKAGING FACILITY FLOOR PLAN |
| 5 | 624953 | 2B-A-2 | | MELT ALL WITH THERMAL DESORPTION FLOOR PLAN, LEVEL 0'-0", AND ISOMETRIC VIEWS |
| 6 | 624954 | 28-A-3 | | MELT ALL WITH THERMAL DESORPTION SECTIONS |
| 7 | 624955 | 2B-A-4 | | MELT ALL WTH THERMAL DESORPTION SECTIONS |
| 8 | 624956 | 2B-A-5 | | SEGREGATE AND THERMAL DESORPTION ENLARGED FLOOR PLAN |
| 9 | 624957 | 2B-E-1 | | ELECTRICAL ONELINE DIAGRAM, 3AP |
| 10 | 624958 | 28-PF-1 | | MELT ALL SORTING AND SEGREGATION PROCESS FLOW DIAGRAM |
| 11 | 824959 | 2B-PF-2 | | MELT ALL SORTING AND SEGREGATION PROCESS FLOW DIAGRAM |
| 12 | 624960 | 2B-PF-3 | | MELT ALL SORTING AND SEGREGATION PROCESS FLOW DIAGRAM |

**RELEASED FOR RECORD ONLY**

**DO NOT FABRICATE**

| | | |
|---|---|---|
| FOR DRAWING INDEX SEE DRAWING NO. 624949 | SUBCONTRACT NO. N/A | INEEL (Idaho National Engineering & Environmental Laboratory) BECHTEL BWXT IDAHO, LLC |
| 300' 200' 100' 0 300' SCALE: 1" = 300.0' | REQUESTER: SL AUSTAD | OU 7-10, PIT 9 REMEDIATION PROJECT TREATMENT OPTION 2B |
| | DESIGN: WH LANDMAN | |
| | DRAWN: CA BEHM | |
| | PROJECT NO. 023203 | |
| | SPEC CODE REC REL | SITE MAP, AREA MAP AND DRAWING INDEX |
| DESIGN PHASE: PRE CON | FOR REVIEW/APPROVAL SIGNATURES SEE DAR NO. 104771 | SIZE D · CAGE CODE 01MF3 · INDEX CODE NUMBER AREA 098 TYPE 0100 GL 01 ORIG 090 · DWG- 624949 · REV |
| SAFETY CATEGORY: N/A | EFFECTIVE DATE: 9-30-2003 | SCALE: NOTED · SHEET 2B-T-1 |

Date: 09/30/03 - 1:56 P.M. | Layout Name: Layout1 | ID: ABE

File: 624949.dwg
Path: T:\REV_0_RR_TREAT

| REVISIONS | | |
|---|---|---|
| REV | DESCRIPTION | EFFECTIVE DATE: |

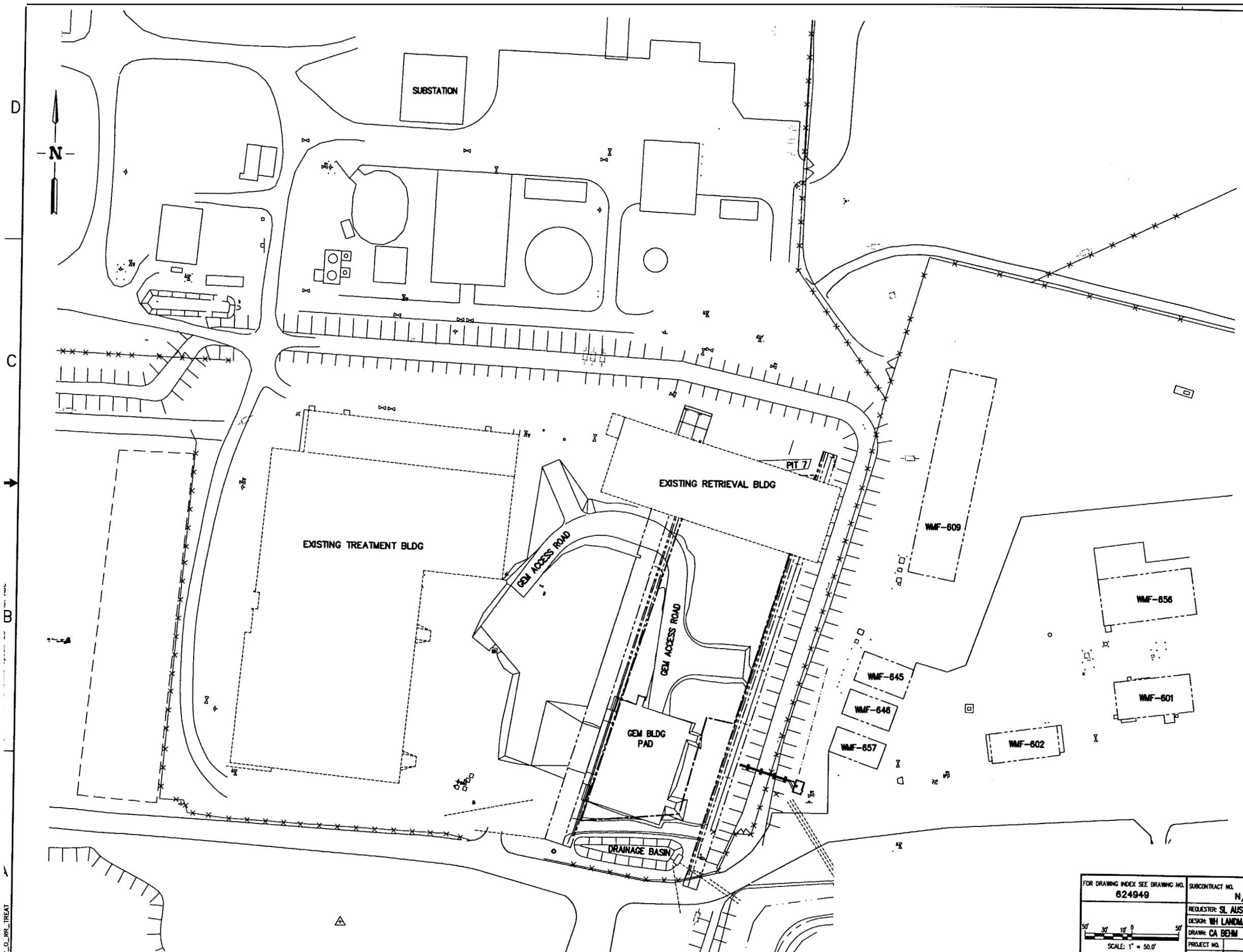


EXISTING SITE PLAN, OPTION – 2B

**RELEASED FOR RECORD ONLY**

**DO NOT FABRICATE**

| | | |
|---|---|---|
| FOR DRAWING INDEX SEE DRAWING NO. 624949 | SUBCONTRACT NO. N/A | INEEL (Idaho National Engineering & Environmental Laboratory) BECHTEL BWXT IDAHO, LLC |
| 50' 30' 10' 0 50' SCALE: 1" = 50.0' | REQUESTER: SL AUSTAD | OU 7-10, PIT 9 REMEDIATION PROJECT TREATMENT OPTION 2B |
| | DESIGN: WH LANDMAN | |
| | DRAWN: CA BEHM | |
| | PROJECT NO. 023203 | |
| | SPCL CODE REC REL | EXISTING SITE PLAN |
| DESIGN PHASE: PRE CON | FOR REVIEW/APPROVAL SIGNATURES SEE DAR NO. 104771 | SIZE D · CAGE CODE 01MF3 · INDEX CODE NUMBER AREA 098 TYPE 0100 CL 02 ORG 090 · DWG-624950 · REV |
| SAFETY CATEGORY: N/A | EFFECTIVE DATE: 9-30-2003 | SCALE: 1"=50.0' · SHEET 2B-C-1 |

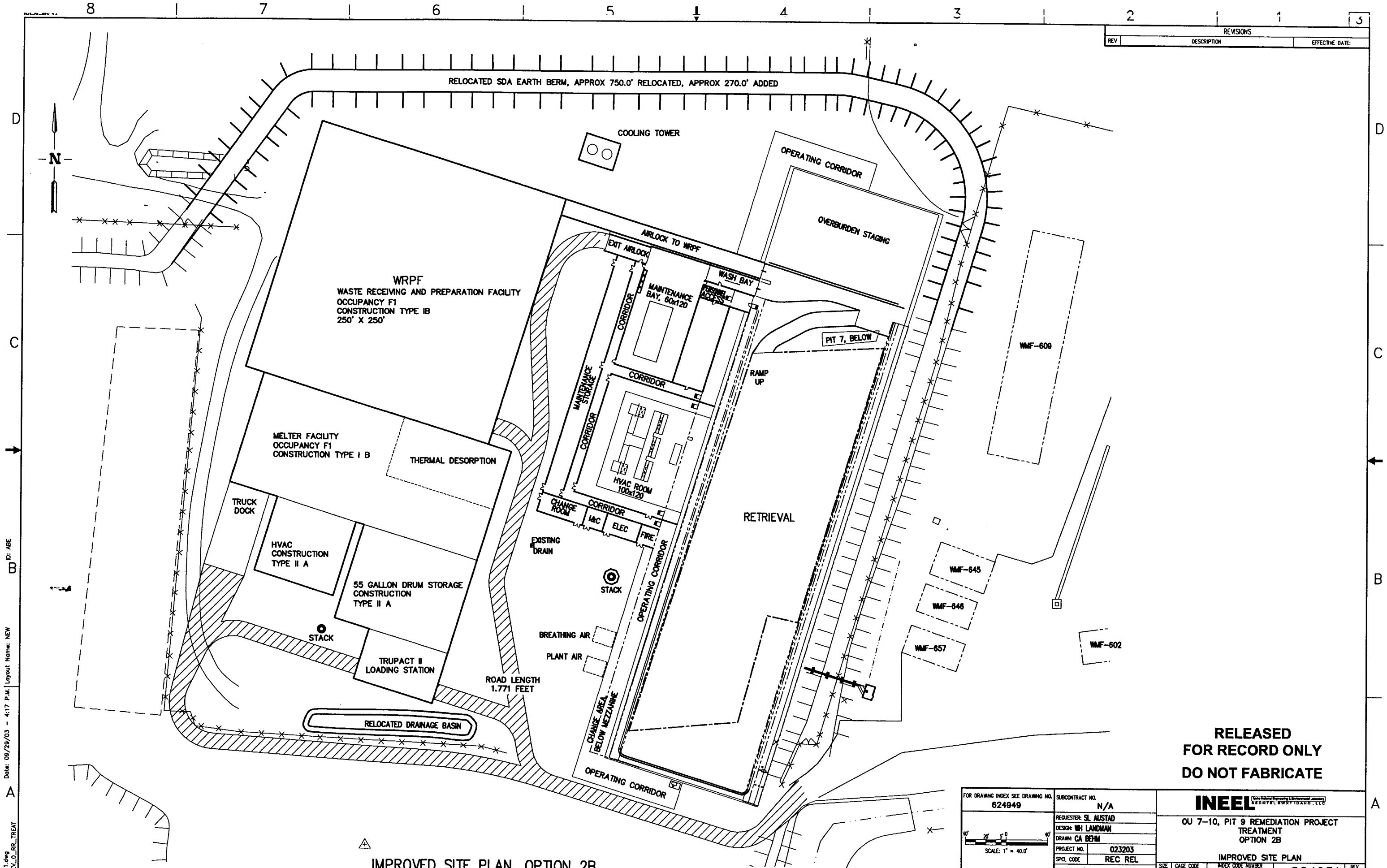


IMPROVED SITE PLAN, OPTION 2B

REVISIONS

| REV | DESCRIPTION | EFFECTIVE DATE: |
|---|---|---|

**RELEASED FOR RECORD ONLY**

**DO NOT FABRICATE**

| | |
|---|---|
| FOR DRAWING INDEX SEE DRAWING NO. 624949 | SUBCONTRACT NO. N/A |
| SCALE: 1" = 40.0' | REQUESTER: SL AUSTAD |
| | DESIGN: WH LANDMAN |
| | DRAWN: CA BEHM |
| | PROJECT NO. 023203 |
| | SPCL CODE REC REL |
| | FOR REVIEW/APPROVAL SIGNATURES SEE DAR NO. 104771 |
| DESIGN PHASE: PRE CON | |
| SAFETY CATEGORY: N/A | EFFECTIVE DATE: 9-30-2003 |

INEEL — Idaho National Engineering & Environmental Laboratory — BECHTEL BWXT IDAHO, LLC

OU 7-10, PIT 9 REMEDIATION PROJECT
TREATMENT
OPTION 2B

IMPROVED SITE PLAN

| SIZE | CAGE CODE | INDEX CODE NUMBER: AREA | TYPE | CL | ORIG | DWG- | REV |
|---|---|---|---|---|---|---|---|
| D | 01MF3 | 098 | 0100 | 02 | 090 | 624951 | |

SCALE: 1"=40.0' SHEET 2B-C-2

Date: 09/29/03 - 4:17 P.M. | Layout Name: NEW | ID: ABE

File: 624951.dwg
Path: T:\REV_0_RR_TREAT

| REVISIONS | | |
|---|---|---|
| REV | DESCRIPTION | EFFECTIVE DATE: |

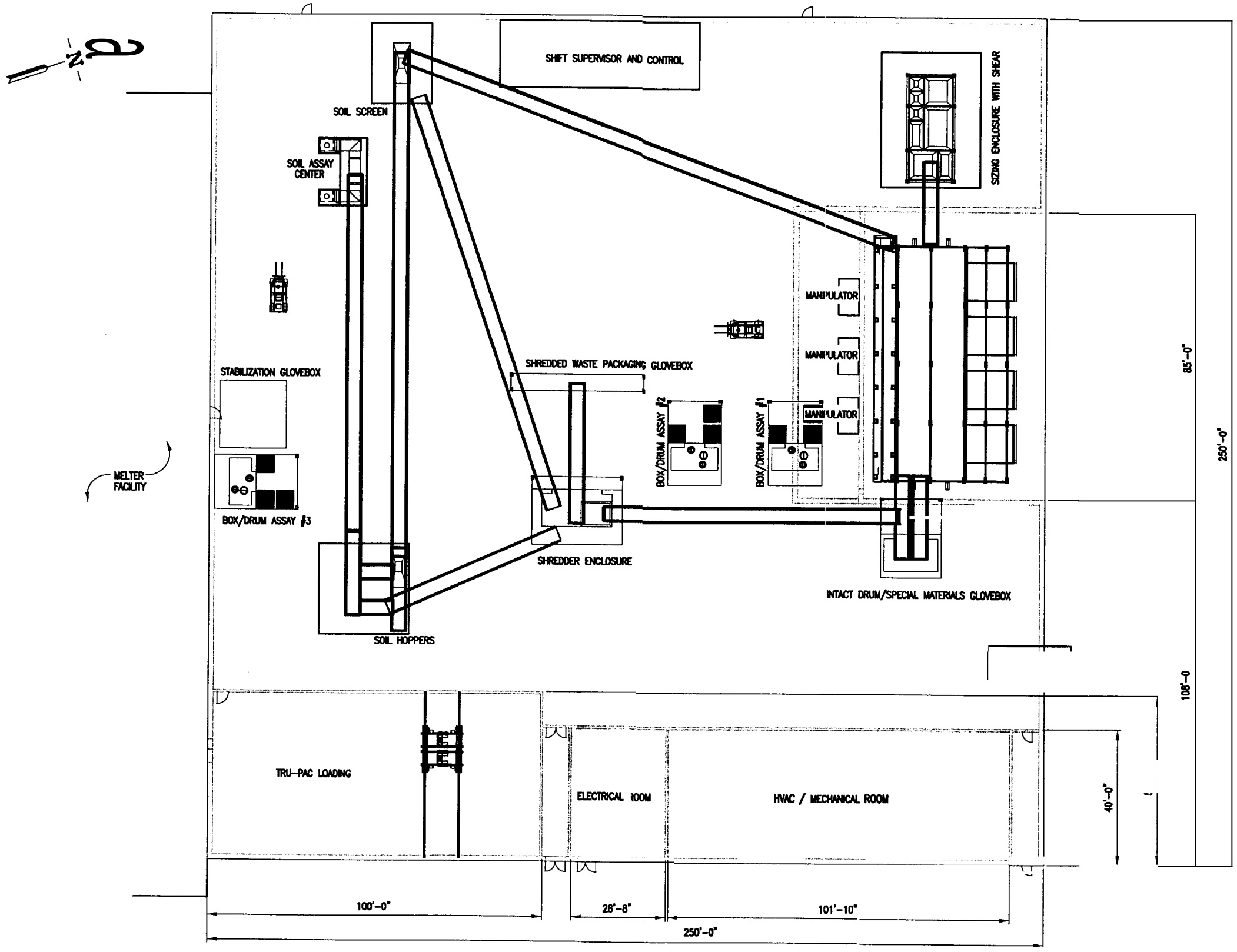


FLOOR PLAN

**RELEASED FOR RECORD ONLY**

**DO NOT FABRICATE**

| | | |
|---|---|---|
| FOR DRAWING INDEX SEE DRAWING NO. 624949 | SUBCONTRACT NO. N/A | INEEL Idaho National Engineering & Environmental Laboratory BECHTEL BWXT IDAHO, LLC |
| SCALE: 1/16" = 1'-0" | REQUESTER: S.L. AUSTAD | OU 7-10, PIT 9 REMEDIATION PROJECT TREATMENT OPTION 2B WASTE RECEIVING AND PACKAGING FACILITY FLOOR PLAN FLOOR PLAN |
| | DESIGN: WM. LANDMAN | |
| | DRAWN: L.M. WHITEHEAD 6-03 | |
| | PROJECT NO. 023203 | |
| | SPCL CODE REC REL | |
| DESIGN PHASE: PRE CON | FOR REVIEW/APPROVAL SIGNATURES SEE DAR NO. 104771 | SIZE D · CAGE CODE 01MF3 · INDEX CODE NUMBER AREA 098 TYPE 9999 CL 00 ORIG 090 · DWG-624952 · REV |
| SAFETY CATEGORY: N/A | EFFECTIVE DATE: 9-30-2003 | SCALE: 1/16" = 1'-0" · SHEET 2B-A-1 |

File: 624952.dwg Path: T:\REV_0_RR_TREAT Date: 09/30/03 - 08:04 A.M. Layout Name: Plan ID: ABE

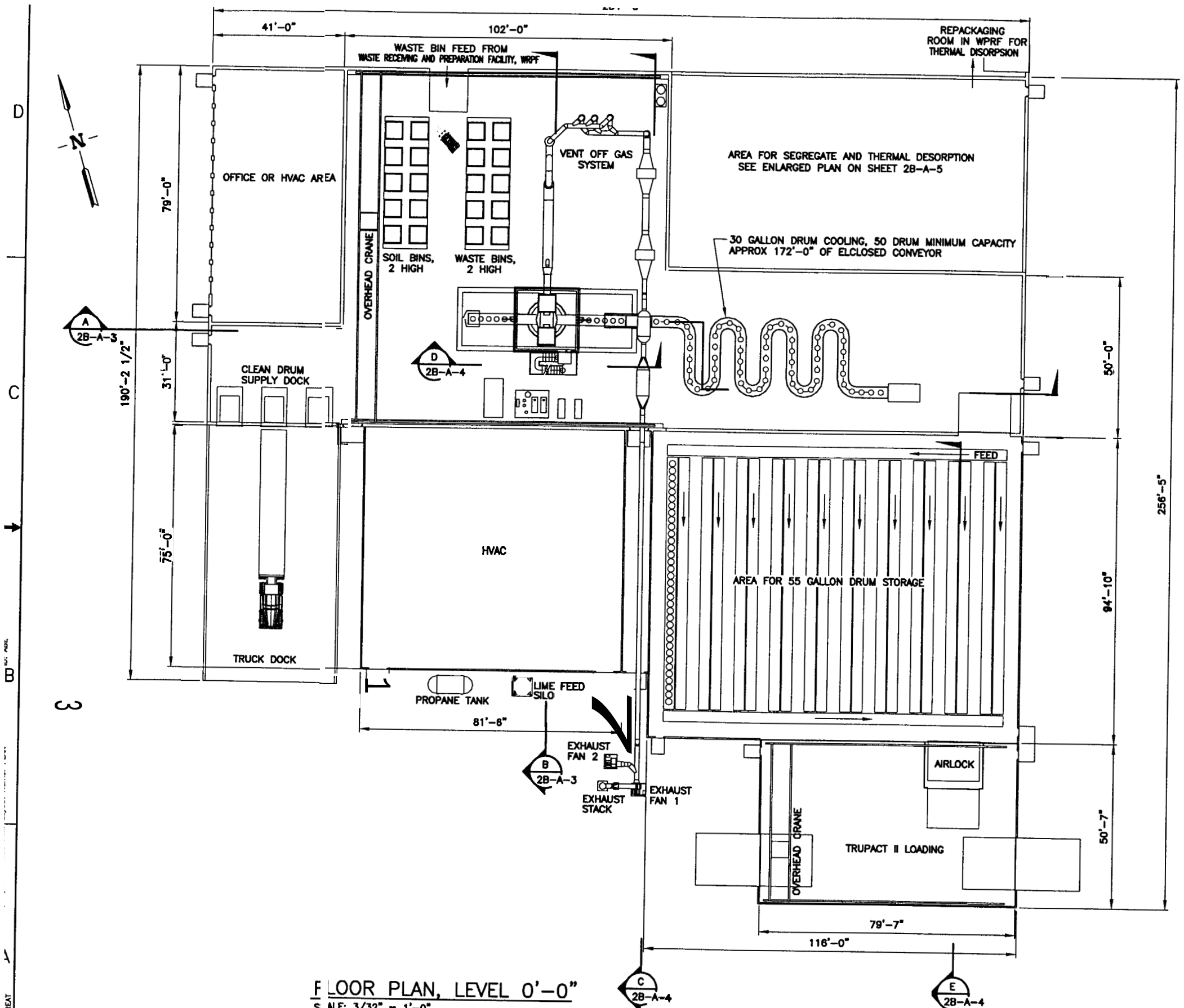


FLOOR PLAN, LEVEL 0'-0"
SCALE: 3/32" = 1'-0"

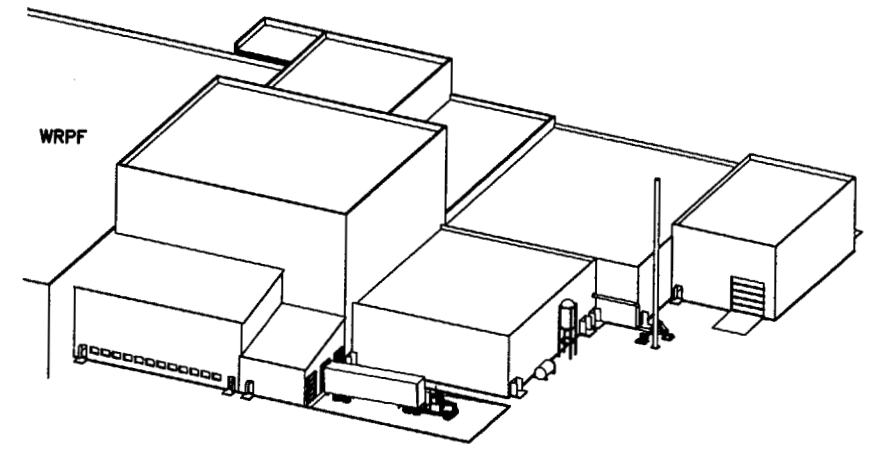


LOOKING EAST
ISOMETRIC VIEW
NTS

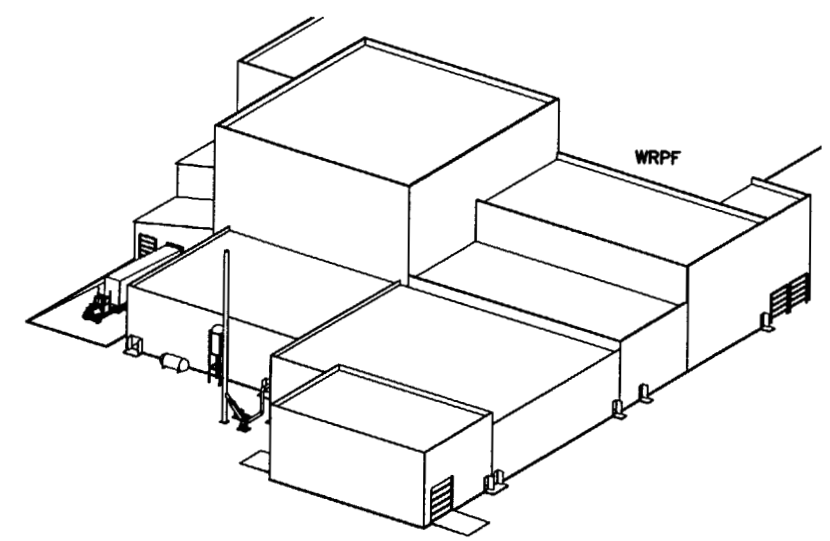


LOOKING NORTH
ISOMETRIC VIEW
NTS

| REV | DESCRIPTION | EFFECTIVE DATE: |
|---|---|---|

RELEASED
FOR RECORD ONLY
DO NOT FABRICATE

| | | |
|---|---|---|
| FOR DRAWING INDEX SEE DRAWING NO. 624949 | SUBCONTRACT NO. N/A | INEEL |
| SCALE: 1/16" = 1'-0" | REQUESTER: SL AUSTAD | OU 7-10, PIT 9 REMEDIATION PROJECT |
| | DESIGN: WH LANDMAN | TREATMENT |
| | DRAWN: CA BEHM | OPTION 2B |
| | PROJECT NO. 023203 | MELT ALL WITH THERMAL DESORPSION |
| | SPCL CODE REC REL | FLOOR PLAN, LEVEL 0'-0" AND ISOMETRIC VIEWS |
| DESIGN PHASE: PRE CON | FOR REVIEW/APPROVAL SIGNATURES SEE DAR NO. 104771 | SIZE D; CAGE CODE 01MF3; INDEX CODE NUMBER AREA 098 TYPE 9999 CL 00 ORG 090; DWG- 624953; REV |
| SAFETY CATEGORY: N/A | EFFECTIVE DATE: 9-30-2003 | SCALE: NOTED; SHEET 2B-A-2 |

| REV | DESCRIPTION | EFFECTIVE DATE: |
|---|---|---|

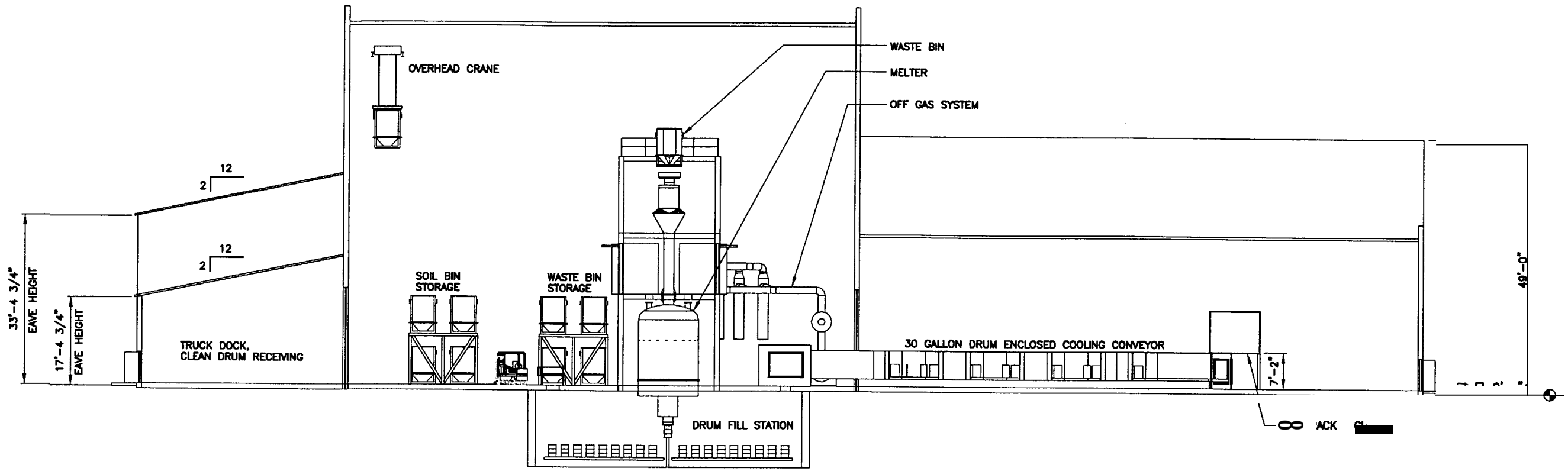


SECTION A 2B-A-2

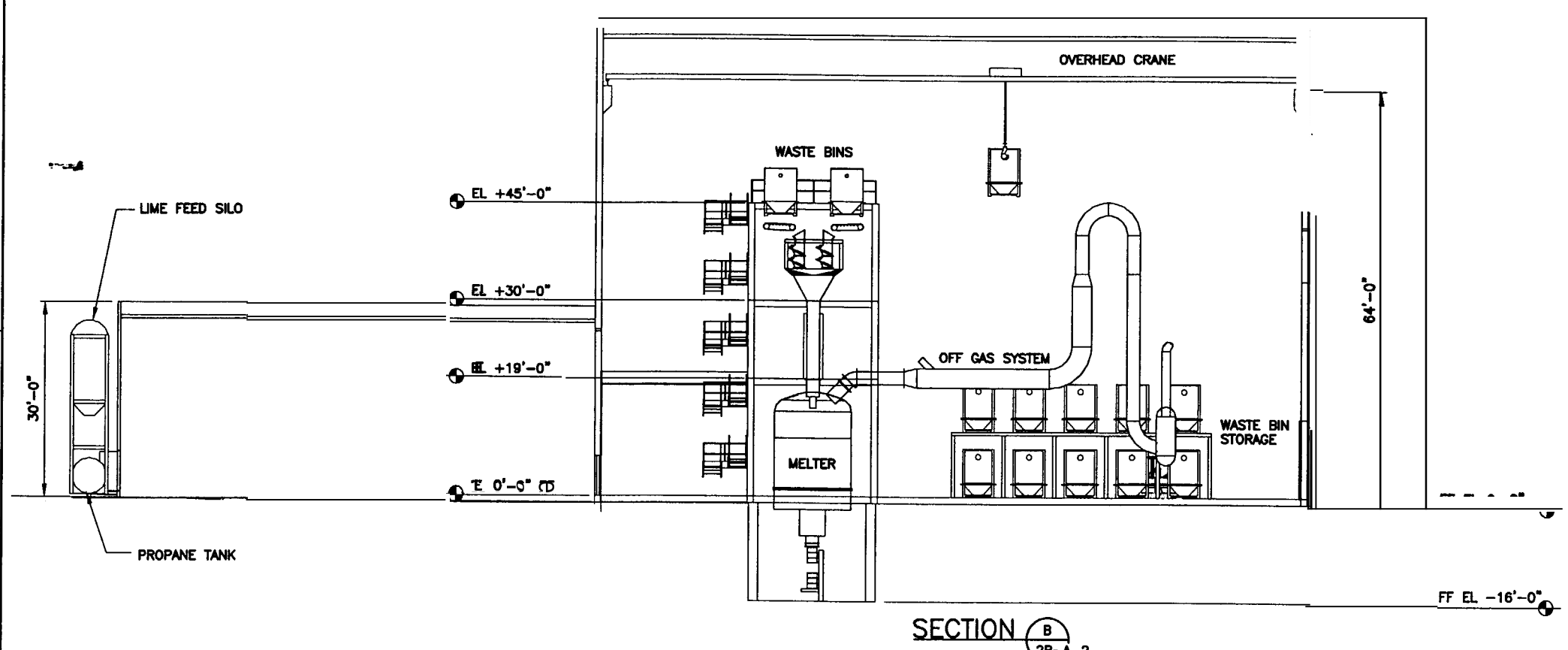


SECTION B 2B-A-2

**RELEASED FOR RECORD ONLY**

**DO NOT FABRICATE**

| | | |
|---|---|---|
| FOR DRAWING INDEX SEE DRAWING NO. 624949 | SUBCONTRACT NO. N/A | INEEL (Idaho National Engineering & Environmental Laboratory) BECHTEL BWXT IDAHO, LLC |
| SCALE: 3/32" = 1'-0" | REQUESTER: SL AUSTAD | OU 7-10, PIT 9 REMEDIATION PROJECT TREATMENT OPTION 2B MELT ALL WITH THERMAL DESORPSION SECTIONS |
| | DESIGN: WH LANDMAN | |
| | DRAWN: CA BEHM | |
| | PROJECT NO. 023203 | |
| | SPCL CODE REC REL | |
| DESIGN PHASE: PRE CON | FOR REVIEW/APPROVAL SIGNATURES SEE DAR NO. 104771 | SIZE D · CAGE CODE 01MF3 · INDEX CODE NUMBER AREA 098 TYPE 9999 Q 00 ORG 090 · DWG-624954 · REV |
| SAFETY CATEGORY: N/A | EFFECTIVE DATE: 9-30-2003 | SCALE: 3/32" = 1'-0" · SHEET 2B-A-3 |

24954.dwg
I:\REV_0_RR_TREAT
Date: 09/29/03 - 4:02 P.M. | Layout Name: SECTION A-B
ID: ABE

| REVISIONS | | |
|---|---|---|
| REV | DESCRIPTION | EFFECTIVE DATE: |

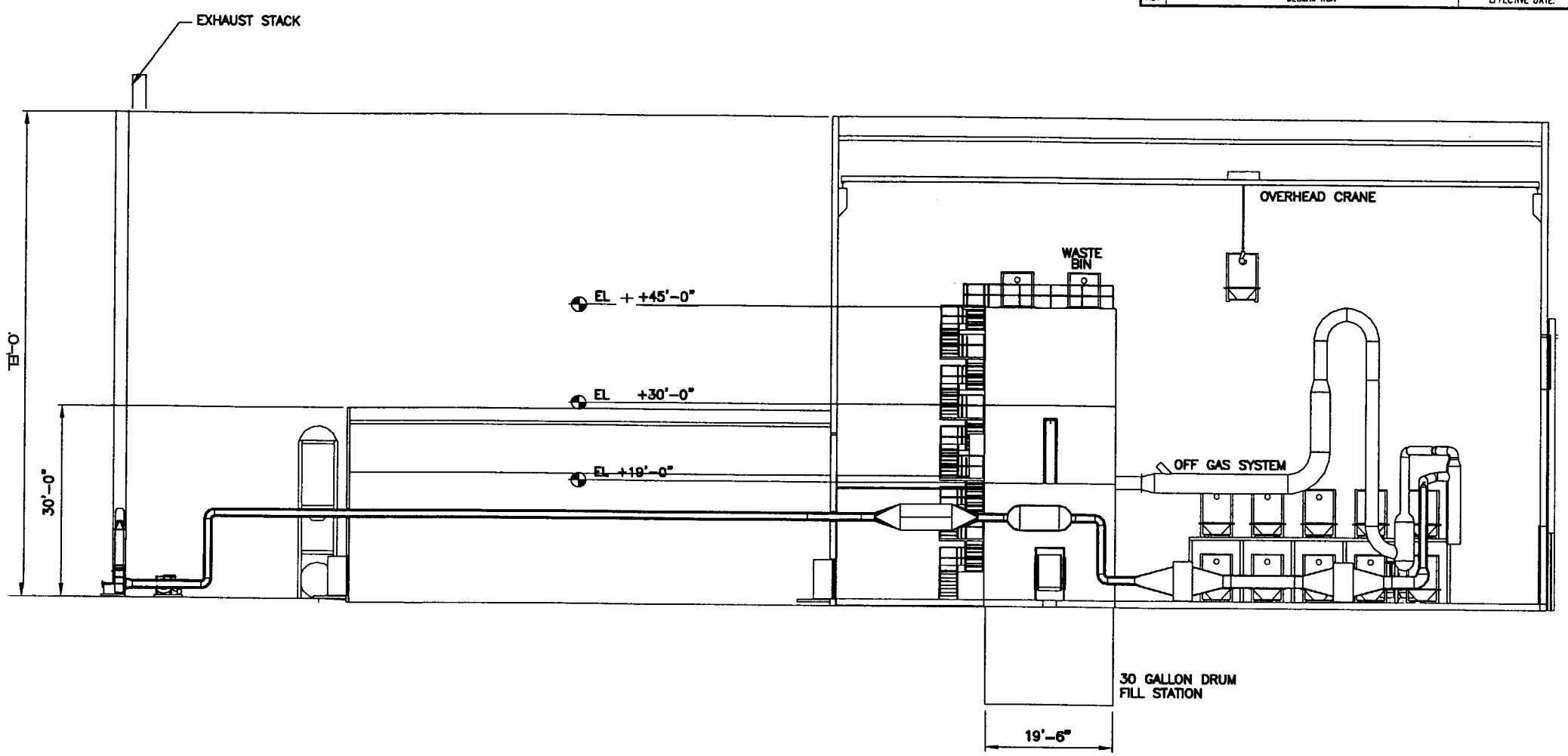


SECTION C 2B-A-2
SCALE: 3/32" = 1'-0"

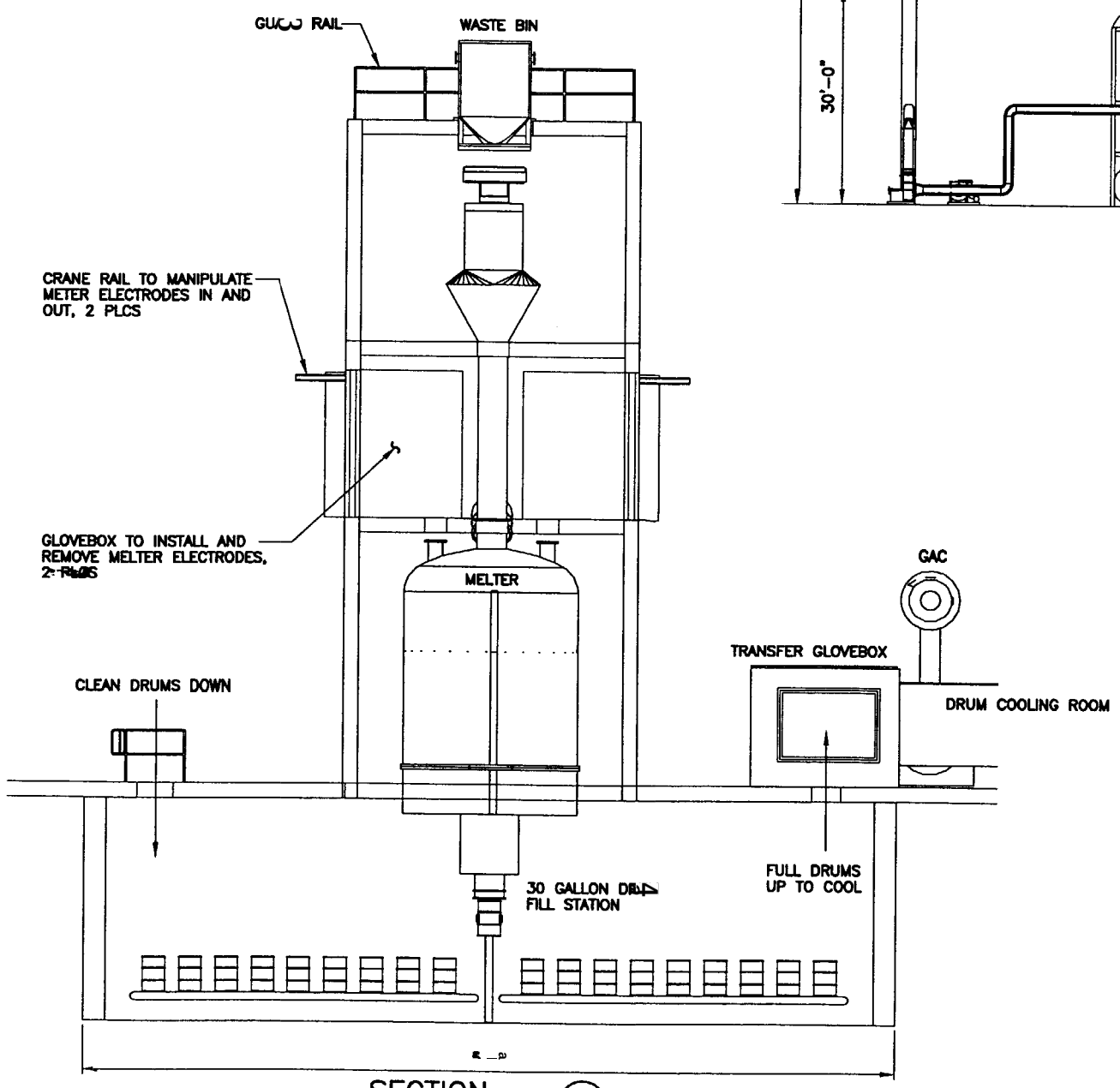


SECTION D 2B-A-2
SCALE: 3/16" = 1'-0"

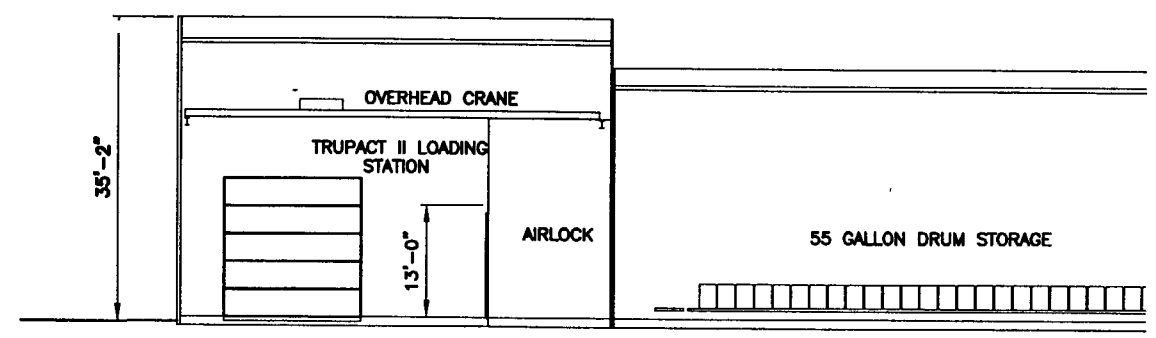


SECTION E 2B-A-2
SCALE: 3/32" = 1'-0"

**RELEASED FOR RECORD ONLY**

**DO NOT FABRICATE**

| | | |
|---|---|---|
| FOR DRAWING INDEX SEE DRAWING NO. 624949 | SUBCONTRACT NO. N/A | INEEL (Idaho National Engineering & Environmental Laboratory) BECHTEL BWXT IDAHO, LLC |
| SCALE: 3/32" = 1'-0" / SCALE: 3/16" = 1'-0" | REQUESTER: SL AUSTAD | OU 7-10, PIT 9 REMEDIATION PROJECT TREATMENT OPTION 2B MELT ALL WITH THERMAL DESORPSION SECTIONS |
| | DESIGN: WH LANDMAN | |
| | DRAWN: CA BEHM | |
| | PROJECT NO. 023203 | |
| | SPCL CODE REC REL | |
| DESIGN PHASE: PRE CON | FOR REVIEW/APPROVAL SIGNATURES SEE DAR NO. 104771 | SIZE D · CAGE CODE 01MF3 · INDEX CODE NUMBER AREA 098 TYPE 9999 CL 00 ORG 090 · DWG- 624955 · REV |
| SAFETY CATEGORY: N/A | EFFECTIVE DATE: 9-30-2003 | SCALE: NOTED · SHEET 2B-A-4 |

FMT-01-REV 3.4

File: 624955.dwg
Path: T:\REV_0_RR_TREAT
Date: 09/17/03 - 11:17 A.M. | Layout Name: SECTION C-D
ID: ABE

| REV | DESCRIPTION | EFFECTIVE DATE: |
|---|---|---|

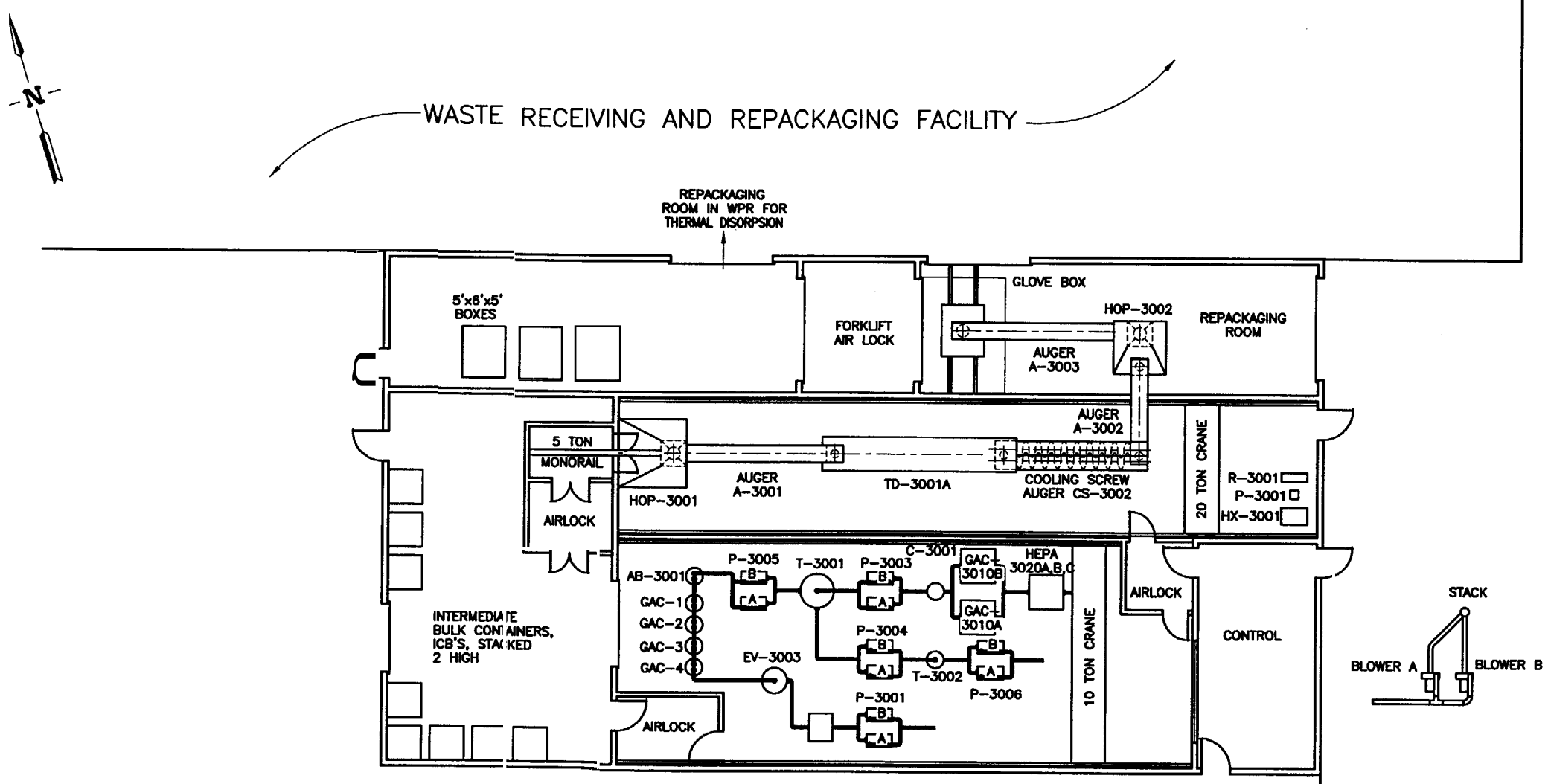


## ENLARGED FLOOR PLAN

**RELEASED FOR RECORD ONLY**

**DO NOT FABRICATE**

| | | |
|---|---|---|
| FOR DRAWING INDEX SEE DRAWING NO. 624949 | SUBCONTRACT NO. N/A | INEEL (Idaho National Engineering & Environmental Laboratory) BECHTEL BWXT IDAHO, LLC |
| SCALE: 1/8" = 1'-0" | REQUESTER: W.H.LANDMAN<br>DESIGN: N.E.RUSSELL<br>DRAWN: CA BEHM | OU 7-10, PIT 9 REMEDIATION PROJECT<br>TREATMENT<br>OPTION 2B<br>SEGREGATE AND THERMAL DESORPTION<br>ENLARGED FLOOR PLAN |
| | PROJECT NO. 023203<br>SPCL CODE REC REL | SIZE D · CAGE CODE 01MF3 · INDEX CODE NUMBER AREA 098 TYPE 9999 Q 00 DISC 090 · DWG- 624956 · REV |
| DESIGN PHASE: PRE CON | FOR REVIEW/APPROVAL SIGNATURES SEE DAR NO. 104771 | |
| SAFETY CATEGORY: N/A | EFFECTIVE DATE: 9-30-2003 | SCALE: 1/8" = 1'-0" · SHEET 2B-A-5 |

Date: 09/29/03 – 4:15 P.M. | Layout Name: 1st Floor Plan | ID: ABE

File: 624956.dwg
Path: T:\REV_0_RR_TREAT

| REVISIONS | | |
|---|---|---|
| REV | DESCRIPTION | EFFECTIVE DATE: |

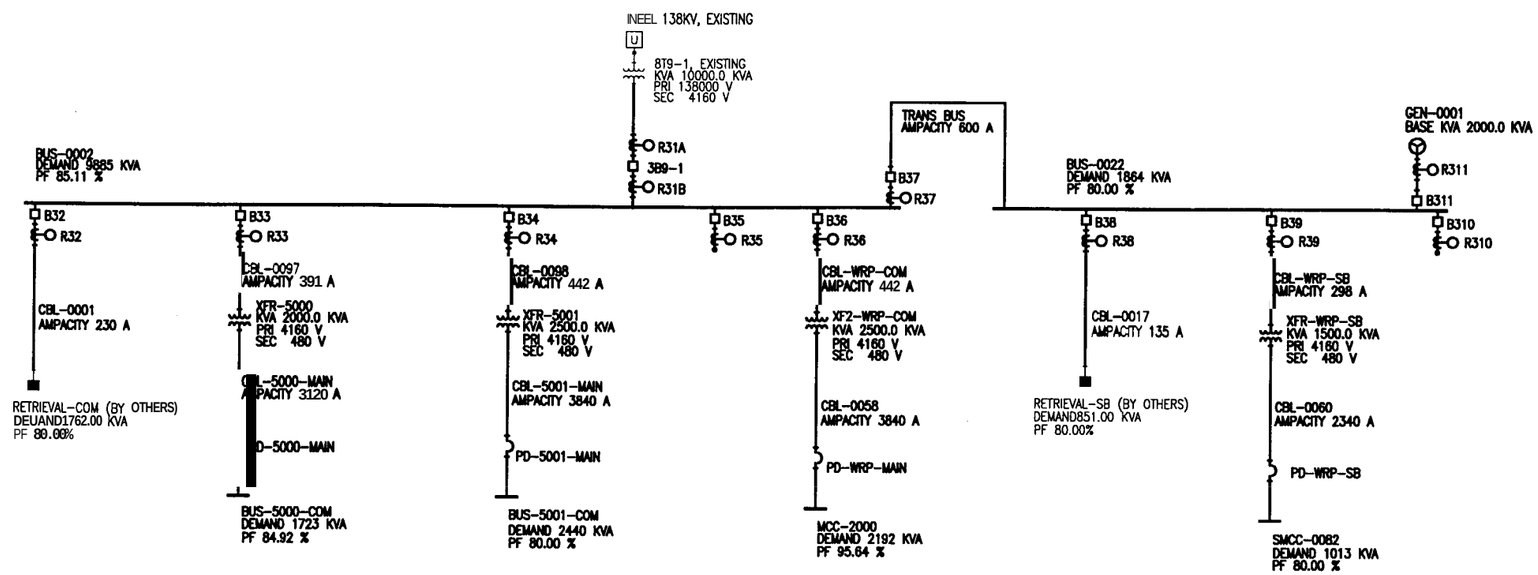


OPTION 2B

ONELINE **DIAGRAM, 3AP**

**RELEASED**
**FOR RECORD ONLY**
**DO NOT FABRICATE**

| | | |
|---|---|---|
| FOR DRAWING INDEX SEE DRAWING NO. 624949 | SUBCONTRACT NO. N/A | INEEL (Idaho National Engineering & Environmental Laboratory) BECHTEL BWXT IDAHO, LLC |
| NO SCALE | REQUESTER: SL AUSTAD<br>DESIGN: BL COWLEY<br>DRAWN: BL COWLEY<br>PROJECT NO. 023203<br>SPCL CODE REC REL | OU 7-10, PIT 9 REMEDIATION PROJECT TREATMENT<br>OPTION 2B<br>ELECTRICAL ONELINE DIAGRAM, 3AP |
| DESIGN PHASE: PRE CON | FOR REVIEW/APPROVAL SIGNATURES SEE DAR NO. 104771 | SIZE D · CAGE CODE 01MF3 · INDEX CODE NUMBER AREA 098 TYPE 9999 CL 10 ORIG 090 · DWG- 624957 · REV |
| SAFETY CATEGORY: N/A | EFFECTIVE DATE: 9-30-2003 | SCALE: NONE · SHEET 2B-E-1 |

File: 624957.dwg
Path: T:\REV_0_RR_TREAT
Date: 09/17/03 - 11:07 A.M. | Layout Name: Layout1
ID: ABE

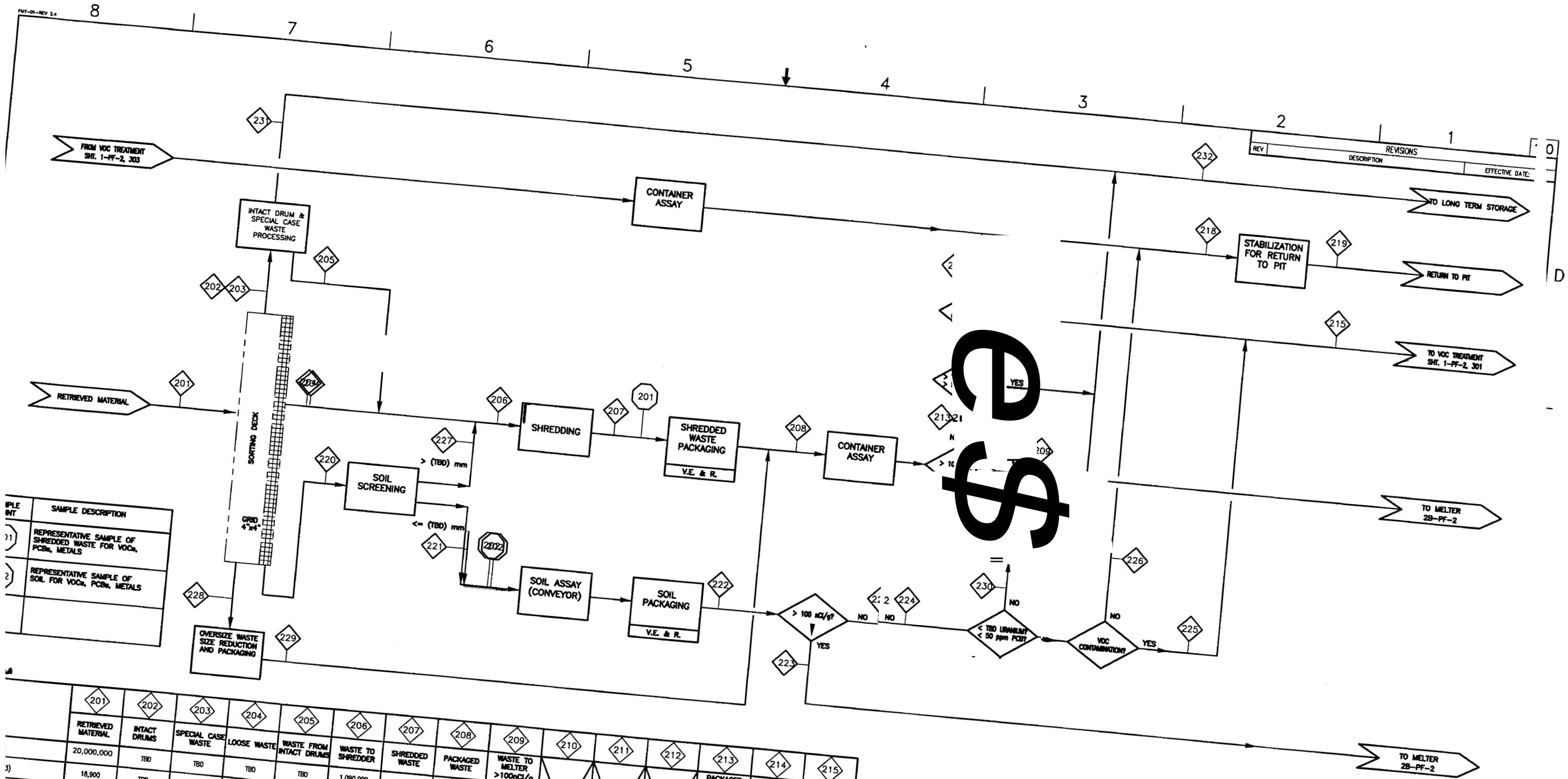


| | SAMPLE DESCRIPTION |
|---|---|
| 01 | REPRESENTATIVE SAMPLE OF SHREDDED WASTE FOR VOCs, PCBs, METALS |
| 2 | REPRESENTATIVE SAMPLE OF SOIL FOR VOCs, PCBs, METALS |

| | 201 RETRIEVED MATERIAL | 202 INTACT DRUMS | 203 SPECIAL CASE WASTE | 204 LOOSE WASTE | 205 WASTE FROM INTACT DRUMS | 206 WASTE TO SHREDDER | 207 SHREDDED WASTE | 208 PACKAGED WASTE | 209 WASTE TO MELTER >100nCi/g | 210 | 211 | 212 | 213 PACKAGED WASTE <=100nCi/g | 214 PACKAGED WASTE TO TD | 215 TOTAL TO TD |
|---|---|---|---|---|---|---|---|---|---|---|---|---|---|---|---|
| | 20,000,000 | TBD | TBD | TBD | TBD | 1,090,000 | 1,090,000 | 1,310,000 | 654,000 | | | | 654,000 | 0 | 9,900,000 |
| 3) | 18,900 | TBD | TBD | TBD | TBD | 3,740 | 1,870 | 2,240 | 1,120 | | | | 1,120 | 0 | 9,100 |
| INERS | TBD | TBD | N.A. | N.A. | N.A. | N.A. | N.A. | 2,100 INSERTS SEE NOTES 5, 6 | 1,050 INSERTS SEE NOTES 5, 6 | | | | 1,050 INSERTS SEE NOTES 5, 6 | 0 | 8,500 SEE NOTES 5, 6 |
| | 1.97 M3/HR | TBD | TBD | TBD | TBD | TBD | – | – | – | | | | – | | 1,030 KG/HR |

| | 216 NON TRU NON VOC WASTE | 217 | 218 TOTAL FOR STABILIZATION | 219 STABILIZED MATERIAL TO PIT | 220 SOIL, SLUDGE & MISC DEBRIS | 221 SCREENED SOIL & SLUDGE | 222 PACKAGED SOIL & SL | 223 SOIL TO MELTER >100 nCi/g | 224 PACKAGED SOIL <=100 nCi/g | 225 VOC SOIL & SLUDGE TO TD | 226 NON-VOC SOIL | 227 SCREENED DEBRIS | 228 OVERSIZE MAT'L | 229 PACKAGED SIZED MAT'L | 230 PCB, URANIUM CONTAMINATED MATERIAL | 231 SPECIAL CASE WASTE | 232 TOTAL TO LONG TERM STORAGE |
|---|---|---|---|---|---|---|---|---|---|---|---|---|---|---|---|---|---|
| | 654,000 | | TBD | TBD | 18,900,000 | 18,900,000 | 19,8 | 9,900,000 | 9,900,000 | 9,900,000 | 0 | TBD | TBD | TBD | TBD | TBD | TBD |
| | 1,120 | | TBD | TBD | 15,100 | 15,100 | 18,200 | 9,100 | 9,100 | 9,100 | 0 | TBD | TBD | TBD | TBD | TBD | TBD |
| | 1,050 INSERTS SEE NOTES 5, 6 | | TBD | TBD | N.A. | N.A. | 17,000 SEE NOTES 5, 6 | 8,500 SEE NOTES 5, 6 | 8,500 SEE NOTES 5, 6 | 8,500 SEE NOTES 5, 6 | 0 | TBD | TBD | TBD | TBD | TBD | TBD |
| IR) | | | | | | | | | | | | | | | | | |

## NOTES

1. RETRIEVAL OPERATING BASIS: 12 HRS/DAY.
2. TREATMENT OPERATING BASIS: 2 YRS, 200 DAYS/YR, 24 HRS/DAY.
3. SLUDGE IS ASSUMED TO BE LOOSE AND MIXED WITH SOIL FOR VOLUME AND MASS CALCULATIONS.
4. V.E. & R. = VISUALLY EXAMINE AND RECORD PACKAGING TO MEET WIPP CRITERIA.
5. SBW INSERTS ARE APPROX 48" X 44" X 34"HIGH. INTERNAL VOLUME APPROX 38 CU FT. INSERTS MAY BE CONVERTED TO TOTES FOR TRANSPORT TO TREATMENT PROCESS.
6. INSERT QUANTITIES SHOWN HERE. SOIL AND WASTE MAY BE PACKAGED DIFFERENTLY TO SUPPORT TREATMENT FEED AND RETURN-TO-PIT REQUIREMENTS.
7. ALL SOIL <= 100 nCi/g WAS ASSUMED TO CONTAIN VOCs. ALL WASTE <= 100 nCi/g WAS ASSUMED TO FREE OF VOCs.

RELEASED FOR RECORD ONLY
DO NOT FABRICATE

FOR DRAWING INDEX SEE DRAWING NO. 624949

SUBCONTRACT NO. N/A

A

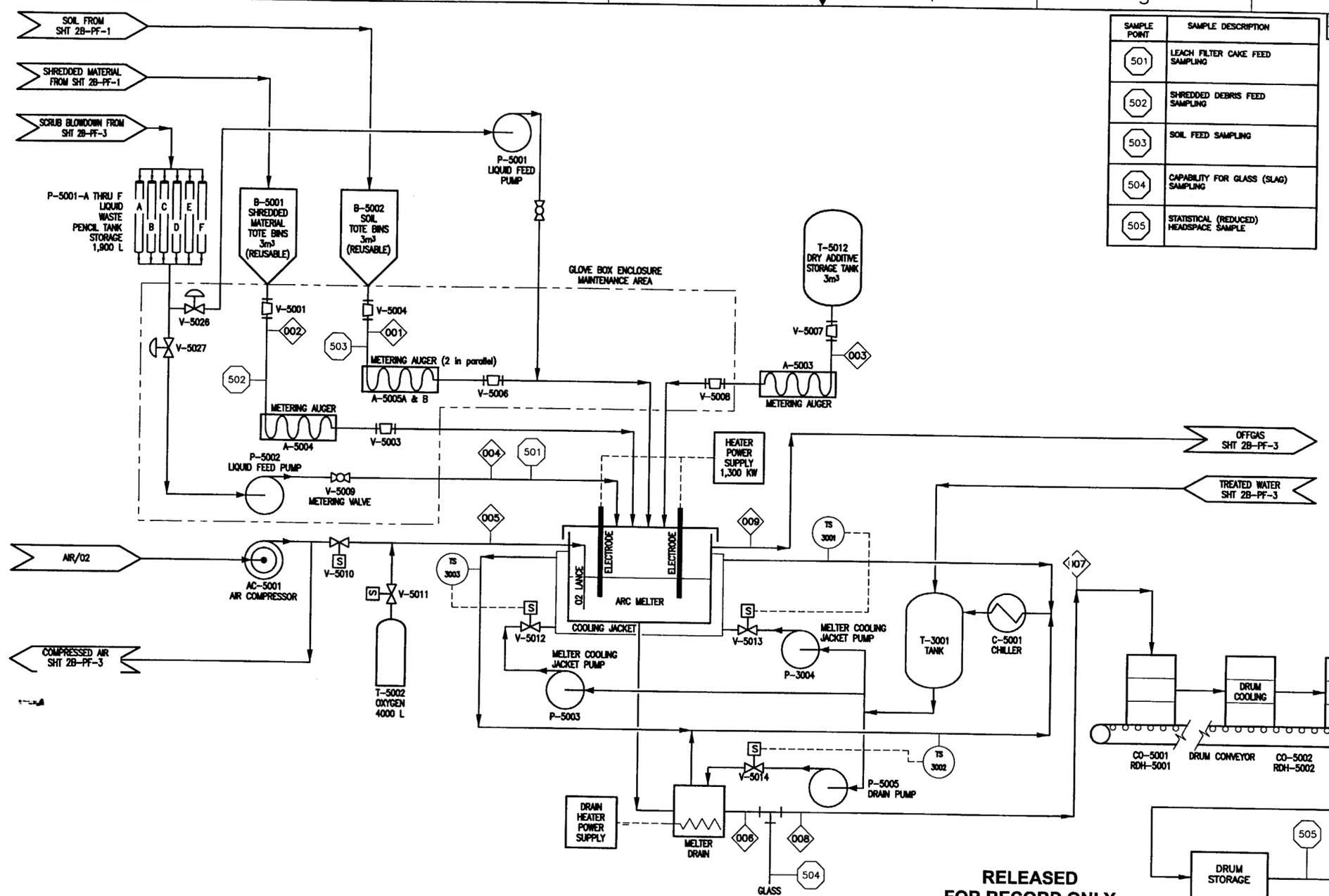


| SAMPLE POINT | SAMPLE DESCRIPTION |
|---|---|
| 501 | LEACH FILTER CAKE FEED SAMPLING |
| 502 | SHREDDED DEBRIS FEED SAMPLING |
| 503 | SOIL FEED SAMPLING |
| 504 | CAPABILITY FOR GLASS (SLAG) SAMPLING |
| 505 | STATISTICAL (REDUCED) HEADSPACE SAMPLE |

| REV | DESCRIPTION | EFFECTIVE DATE: |
|---|---|---|
| | | |

**RELEASED FOR RECORD ONLY**

**DO NOT FABRICATE**

| | 001 DIRT & SLUDGE FEED | 002 SHREDDED MATERIAL | 003 ADDITIVE FEED | 004 TOTAL MELTER FEED | 005 AIR/O2 LANCE | 006 GLASS | 007 DRUM | 008 METAL | 009 MELTER OFF GAS |
|---|---|---|---|---|---|---|---|---|---|
| FLOW RATE (Kg/hr) | 961 | 23 | TBD | 984 | 111 L/HR | 729 | 1.7 /IN | 0 | 236 SCFM |
| PRESSURE (PSI) | AMBIENT | AMBIENT | AMBIENT | AMBIENT | 30 PSI | AMBIENT | AMBIENT | | -216 |
| TEMPERATURE (°C) | AMBIENT | AMBIENT | AMBIENT | AMBIENT | AMBIENT | 1,200 | AMBIENT | | 600 |
| SPECIFIC GRAVITY | | | | | | 2,700 | | | |

FOR DRAWING INDEX SEE DRAWING NO. 624949

NO SCALE

DESIGN PHASE: PRE CON

SAFETY CATEGORY: N/A

SUBCONTRACT NO. N/A

REQUESTER: W.H.LANDMAN

DESIGN: N.E.RUSSELL

DRAWN: R.G.Street

PROJECT NO. 023203

SPCL CODE REC REL

FOR REVIEW/APPROVAL SIGNATURES SEE DAR NO. 104771

EFFECTIVE DATE: 9-30-2003

**INEEL** Idaho National Engineering & Environmental Laboratory BECHTEL BWXT IDAHO, LLC

OU 7-10, PIT 9 REMEDIATION PROJECT
TREATMENT
OPTION 2B
MELT ALL SORTING AND SEGREGATION
PROCESS FLOW DIAGRAM

SIZE D | CAGE CODE 01MF3 | INDEX CODE NUMBER AREA 098 TYPE 9999 DA 28 SEQ 090 | DWG- 624959 | REV

SCALE: NONE | SHEET 2B-PF-2

Date: 09/29/03 - 4:19 P.M. | Layout Name: Sheet 1 | ID: ABE

File: 624959.dwg
with: T:\REV 0 as TSPAT

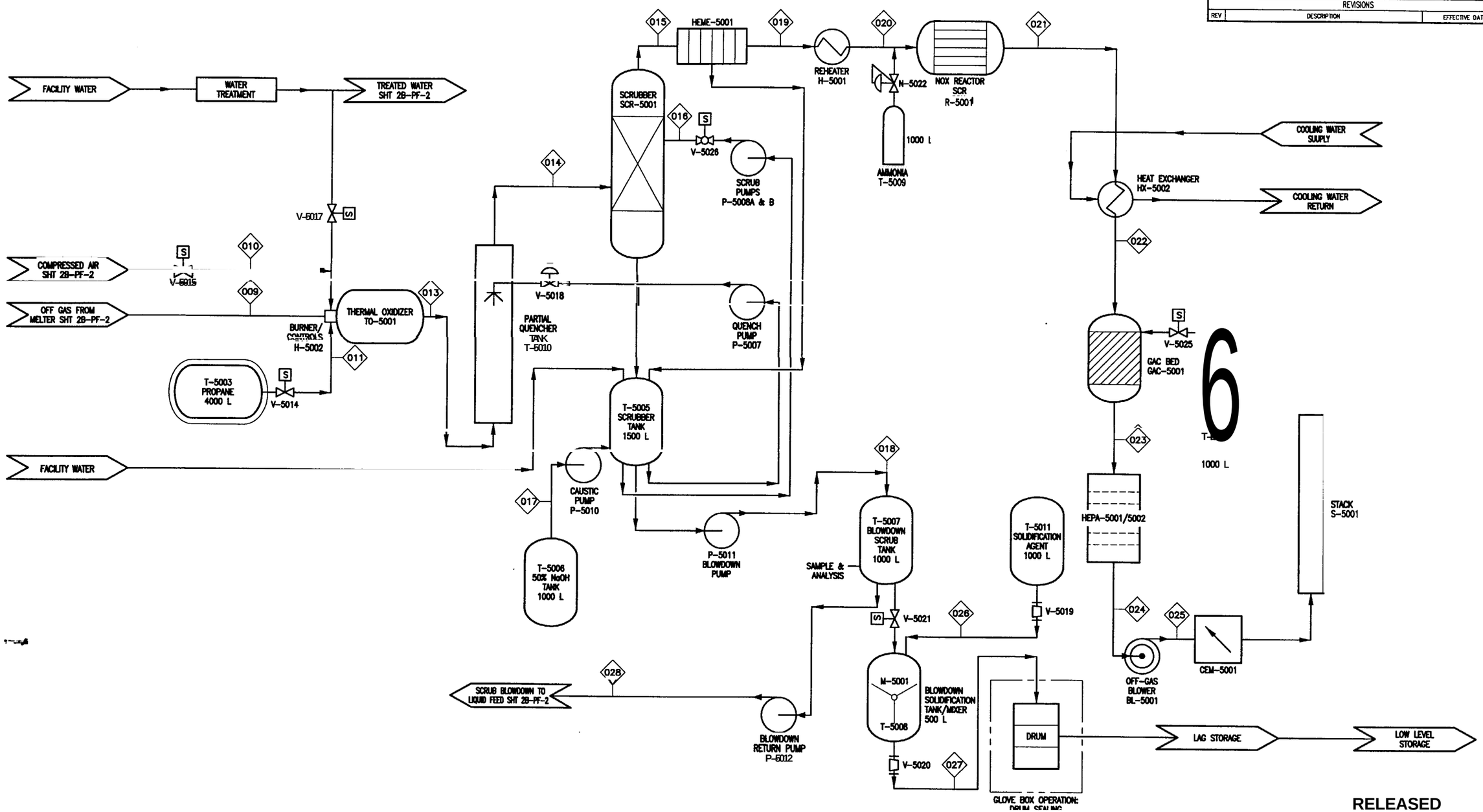


RELEASED
FOR RECORD ONLY
DO NOT FABRICATE

| | 009 | 010 | 011 | 012 | 013 | 014 | 015 | 016 | 017 | 018 | 019 | 020 | 021 | 022 | 023 | 024 | 025 | 026 | 027 | 028 |
|---|---|---|---|---|---|---|---|---|---|---|---|---|---|---|---|---|---|---|---|---|
| | MELTER OFF GAS | AIR/O2 | PROPANE | TEMPERATURE CONTROL WATER | THERMAL OXIDIZER OUTPUT | QUENCHER OUTPUT | SCRUBBER OUTPUT | SCRUBBER FLOW | NaOH | BLOWDOWN SCRUB | HEME OUT | REHEAT OUT | SCR OUT | GAC IN | GAC OUT | HEPA OUT | OFF GAS | SOLIDIFICATION AGENT | SOLIDIFY SCRUB | RECYCLE TO LIQUID FEED |
| FLOW RATE (Kg/hr) | 236 SCFM | 40.5 SCFM | 45 SCFM | TBO | 285 SCFM | 570 SCFM | 590 | 390 L/HR | 100 L/HR | TBD | 610 | 640 | 690 | 640 | 640 | 1.920 | 1,920 | TBO | TBD | TBO |
| PRESSURE (ATM) | 0.823 | | | | 0.818 | 0.816 | 0.804 | TBO | AMBIENT | AMBIENT | 0.79 | 0.79 | 0.79 | 0.79 | 0.79 | 0.789 | 0.78 | - | - | - |
| TEMPERATURE (°C) | 600 | AMBIENT | AMBIENT | AMBIENT | 1,200 | 93 | 91 | 30 | AMBIENT | 30 | 91 | 111 | 400 | 91 | 80 | 54 | 54 | - | - | - |
| SPECIFIC GRAVITY | | | | | | | | | | | | | | | | | | | | |

| | | |
|---|---|---|
| FOR DRAWING INDEX SEE DRAWING NO. 624949 | SUBCONTRACT NO. N/A | INEEL (Idaho National Engineering & Environmental Laboratory) BECHTEL BWXT IDAHO, LLC |
| NO SCALE | REQUESTER: W.H.LANDMAN<br>DESIGN: N.E.RUSSELL<br>DRAWN: R.G.Street<br>PROJECT NO. 023203<br>SPCL CODE REC REL | OU 7-10, PIT 9 REMEDIATION PROJECT<br>TREATMENT<br>OPTION 2B<br>MELT ALL SORTING AND SEGREGATION<br>PROCESS FLOW DIAGRAM |
| DESIGN PHASE: PRE CON | FOR REVIEW/APPROVAL SIGNATURES SEE DAR NO. 104771 | SIZE D · CAGE CODE 01MF3 · INDEX CODE NUMBER AREA 098 TYPE 9999 CL 28 ORIG 090 · DWG- 624960 · REV |
| SAFETY CATEGORY: N/A | EFFECTIVE DATE: 9-30-2003 | SCALE: NONE · SHEET 2B-PF-: |

Date: 09/29/03 – 4:18 P.M. | Layout Name: Sheet 1
ID: ABE
624960.dwg

| REVISIONS | | |
|---|---|---|
| REV | DESCRIPTION | EFFECTIVE DATE: |

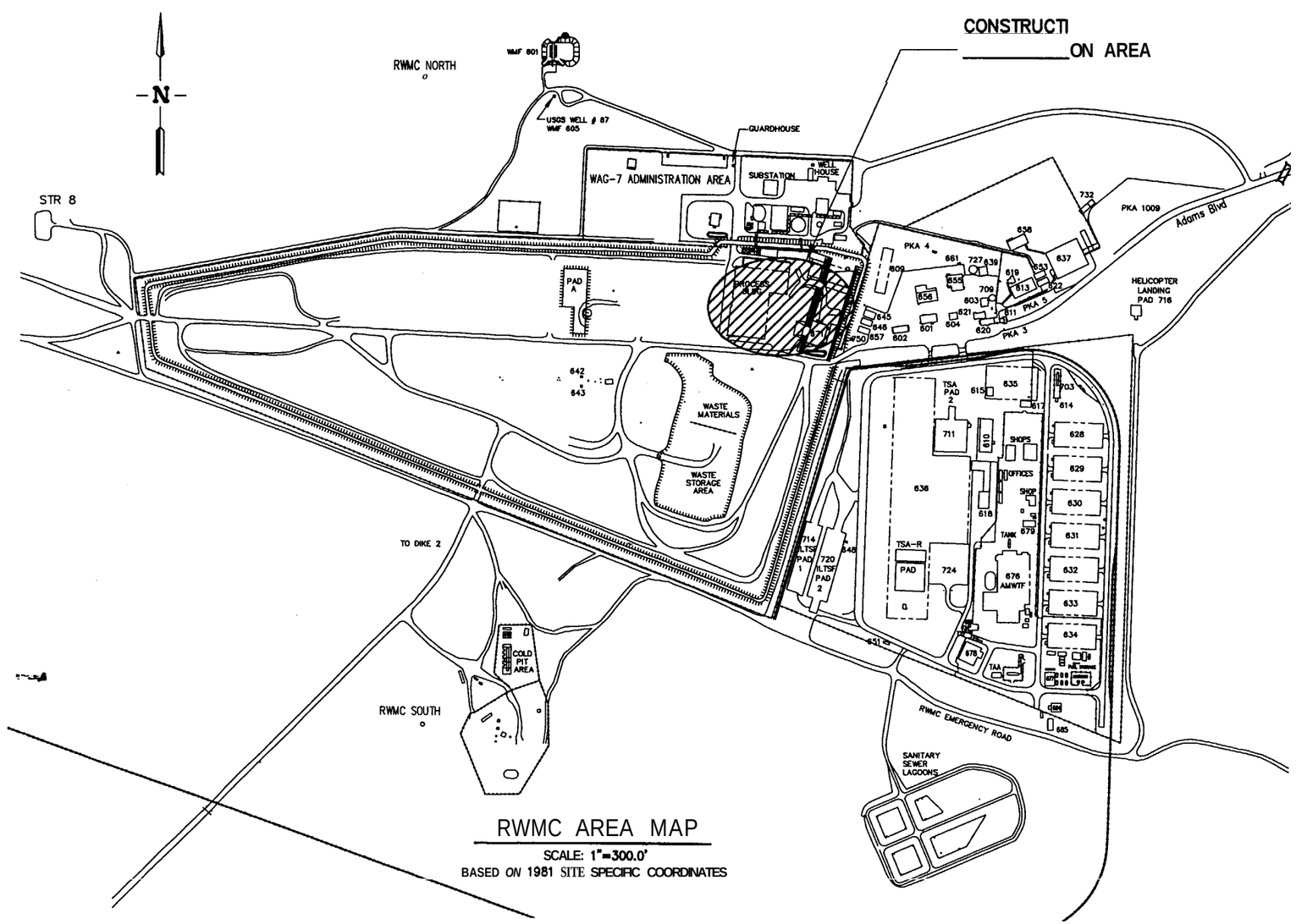


## RWMC AREA MAP

SCALE: 1"=300.0'

BASED ON 1981 SITE SPECIFIC COORDINATES

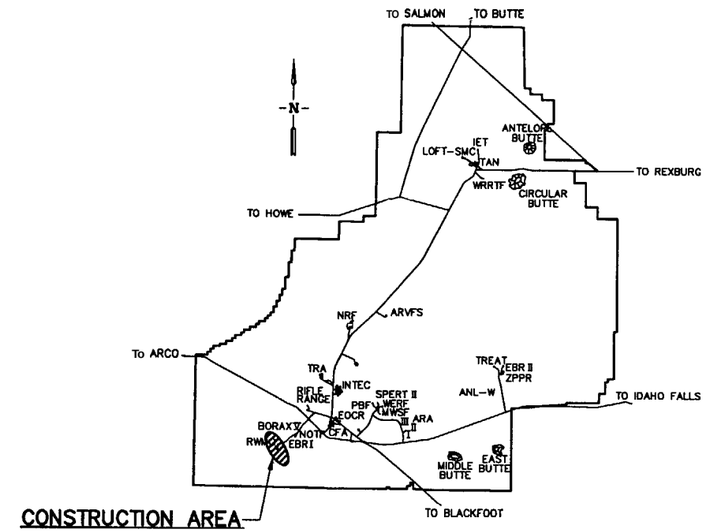


## INEEL SITE MAP

SCALE: NONE

## DRAWING INDEX

| PAGE NO. | DWG NO. | A-E DWG NO. | REV | DRAWING TITLE |
|---|---|---|---|---|
| 1 | 624981 | 4A-T-1 | | SITE MAP, AREA MAP AND DRAWING INDEX |
| 2 | 624962 | 4A-C-1 | | EXISTING SITE PLAN |
| 3 | 624963 | 4A-C-2 | | IMPROVED SITE PLAN |
| 4 | 624964 | 4A-A-1 | | WASTE RECEIVING AND PACKAGING FACILITY FLOOR PLAN |
| 5 | 824965 | 4A-A-2 | | THERMAL DESORPSION, CHEMICAL LEACH AND INCINERATOR FIRST FLOOR PLAN |
| 6 | 624966 | 4A-A-3 | | THERMAL DESORPSION, CHEMICAL LEACH AND INCINERATOR, SECOND FLOOR PLAN |
| 7 | 624967 | 4A-A-4 | | THERMAL DESORPSION, CHEMICAL LEACH AND INCINERATOR SECTION |
| 8 | 624968 | 4A-A-5 | | CHEMICAL STORAGE BUILDING FIRST FLOOR PLAN |
| 9 | 624969 | 4A-P-1 | | THERMAL DESORPSION, CHEMICAL LEACH AND INCINERATOR CHILLER SYSTEM SECTION |
| 10 | 624970 | 4A-HV-1 | | THERMAL DESORPSION, CHEMICAL LEACH AND INCINERATOR HVAC FLOW DIAGRAM |
| 11 | 624971 | 4A-E-1 | | ELECTRICAL ONELINE DIAGRAM, 2AP |
| 12 | 624972 | 4A-PF-1 | | THERMAL DESORPSION, CHEMICAL LEACH AND INCINERATOR PROCESS FLOW DIAGRAM |
| 13 | 624973 | 4A-PF-2 | | THERMAL DESORPSION, CHEMICAL LEACH AND INCINERATOR PROCESS FLOW DIAGRAM |
| 14 | 624974 | 4A-PF-3 | | THERMAL DESORPSION, CHEMICAL LEACH AND INCINERATOR PROCESS FLOW DIAGRAM |
| 15 | 624975 | 4A-PF-4 | | THERMAL DESORPSION, CHEMICAL LEACH AND INCINERATOR PROCESS FLOW DIAGRAM |
| 16 | 624976 | 4A-PF-5 | | THERMAL DESORPSION, CHEMICAL LEACH AND INCINERATOR PROCESS FLOW DIAGRAM |
| 17 | 624977 | 4A-PF-6 | | THERMAL DESORPSION, CHEMICAL LEACH AND INCINERATOR PROCESS FLOW DIAGRAM |
| 18 | 624978 | 4A-PF-7 | | THERMAL DESORPSION, CHEMICAL LEACH AND INCINERATOR PROCESS FLOW DIAGRAM |

**RELEASED FOR RECORD ONLY**

**DO NOT FABRICATE**

| | |
|---|---|
| FOR DRAWING INDEX SEE DRAWING NO. 624961 | SUBCONTRACT NO. N/A |
| 300' 200' 100' 0 300' SCALE: 1" = 300.0' | REQUESTER: SL AUSTAD |
| | DESIGN: WH LANDMAN |
| | DRAWN: CA BEHM |
| | PROJECT NO. 023203 |
| | SPEC CODE REC REL |
| DESIGN PHASE: PRE CON | FOR REVIEW/APPROVAL SIGNATURES SEE DAR NO. 104771 |
| SAFETY CATEGORY: N/A | EFFECTIVE DATE: 9-30-2003 |

INEEL (Idaho National Engineering & Environmental Laboratory) LOCKHEED MARTIN IDAHO, LLC

OU 7-10, PIT 9 REMEDIATION PROJECT
TREATMENT
OPTION 4A

SITE MAP, AREA MAP AND DRAWING INDEX

| SIZE | CAGE CODE | INDEX CODE NUMBER: AREA | TYPE | CL | DBG | DWG- | REV |
|---|---|---|---|---|---|---|---|
| D | 01MF3 | 098 | 0100 | 01 | 090 | 624961 | |

SCALE: NOTED

SHEET 4A-T-1

Date: 09/30/03 - 2:10 P.M. | Layout Name: Layout1 | ID: ABE

File: 624961.dwg

F-01-REV 3.4

| REVISIONS | | |
|---|---|---|
| REV | DESCRIPTION | EFFECTIVE DATE: |

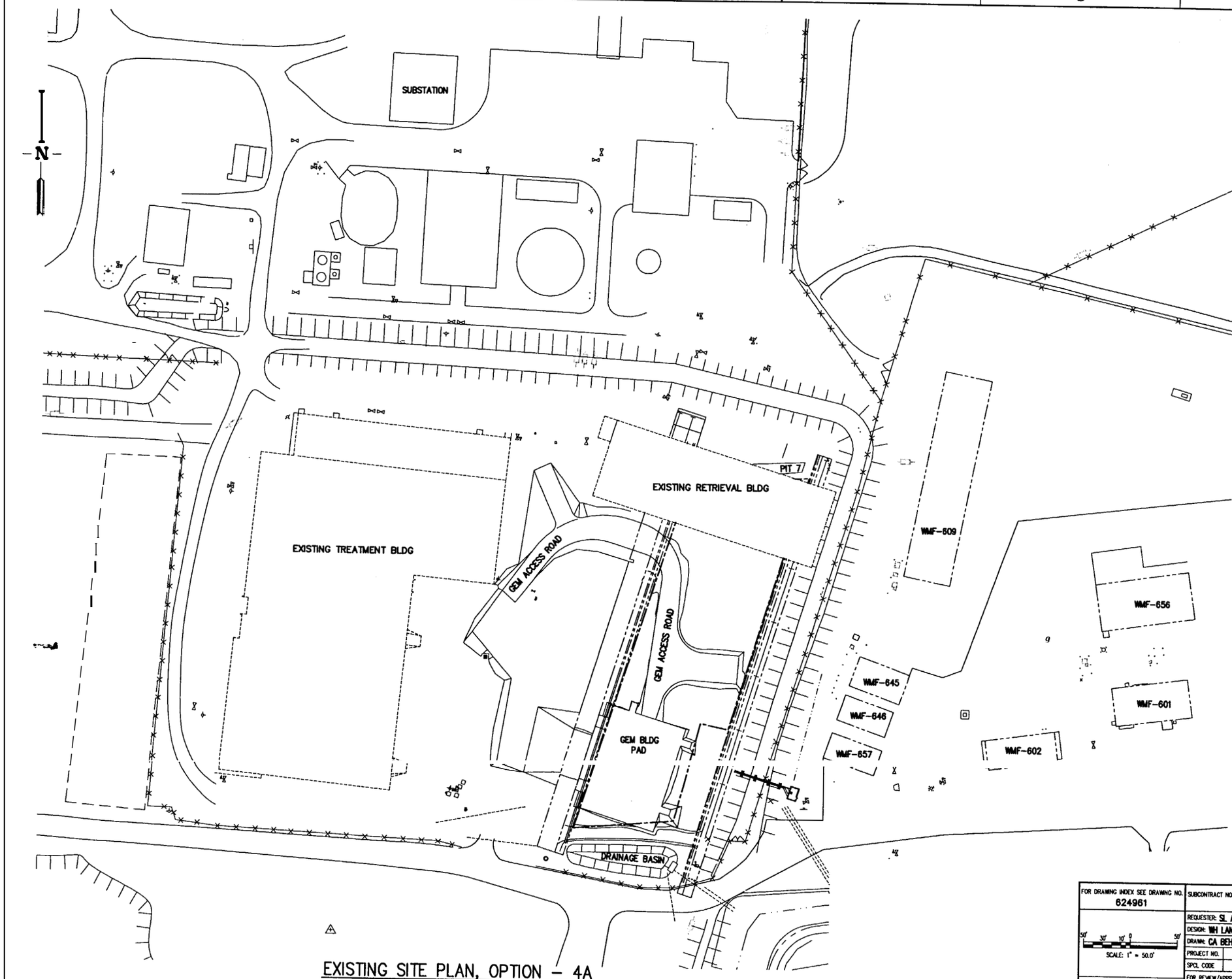


EXISTING SITE PLAN, OPTION – 4A

**RELEASED FOR RECORD ONLY**

**DO NOT FABRICATE**

| | | |
|---|---|---|
| FOR DRAWING INDEX SEE DRAWING NO. 624961 | SUBCONTRACT NO. N/A | INEEL (Idaho National Engineering & Environmental Laboratory) BECHTEL BWXT IDAHO, LLC |
| 50' 30' 10' 0 50' SCALE: 1" = 50.0' | REQUESTER: SL AUSTAD | OU 7-10, PIT 9 REMEDIATION PROJECT TREATMENT OPTION 4A |
| | DESIGN: WH LANDMAN | |
| | DRAWN: CA BEHM | |
| | PROJECT NO. 023203 | |
| | SPCL CODE REC REL | EXISTING SITE PLAN |
| DESIGN PHASE: PRE CON | FOR REVIEW/APPROVAL SIGNATURES SEE DAR NO. 104771 | SIZE D · CAGE CODE 01MF3 · INDEX CODE NUMBER AREA 098 TYPE 0100 CL 02 ORIG 090 · DWG-624962 · REV |
| SAFETY CATEGORY: N/A | EFFECTIVE DATE: 9-30-2003 | SCALE: 1"=50.0' · SHEET 4A-C-1 |

Date: 09/30/03 – 08:18 A.M. | Layout Name: EXISTING option-4A | ID: ABE

ile: 624962.dwg
ath: T:\RFV ∩ BR TRFMT

| REVISIONS | | |
|---|---|---|
| REV | DESCRIPTION | EFFECTIVE DATE: |

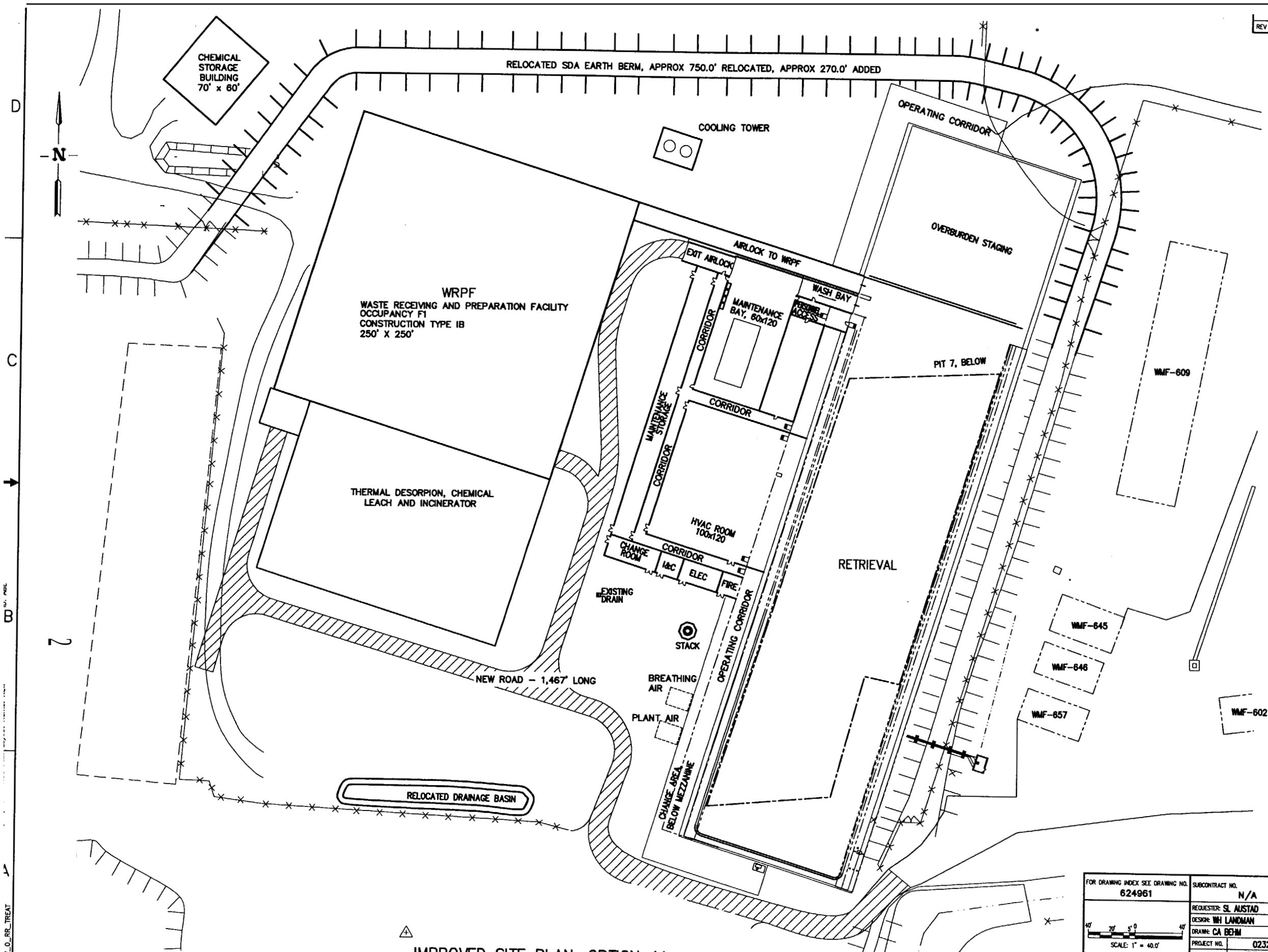


IMPROVED SITE PLAN, OPTION 4A

**RELEASED FOR RECORD ONLY**

**DO NOT FABRICATE**

| | | |
|---|---|---|
| FOR DRAWING INDEX SEE DRAWING NO. 624961 | SUBCONTRACT NO. N/A | INEEL (Idaho National Engineering & Environmental Laboratory) BECHTEL BWXT IDAHO, LLC |
| 40' 20' 5' 0 40' SCALE: 1" = 40.0' | REQUESTER: SL AUSTAD | OU 7-10, PIT 9 REMEDIATION PROJECT TREATMENT |
| | DESIGN: WH LANDMAN | |
| | DRAWN: CA BEHM | OPTION 4A IMPROVED SITE PLAN |
| | PROJECT NO. 023203 | |
| | SPCL CODE REC REL | |
| DESIGN PHASE: PRE CON | FOR REVIEW/APPROVAL SIGNATURES SEE DAR NO. 104771 | SIZE D; CAGE CODE 01MF3; INDEX CODE NUMBER AREA 098 TYPE 0100 CL 02 ORG 090; DWG-624963; REV |
| SAFETY CATEGORY: N/A | EFFECTIVE DATE: 9-30-2003 | SCALE: 1"=40.0'; SHEET 4A-C-2 |

| REVISIONS | | |
|---|---|---|
| REV | DESCRIPTION | EFFECTIVE DATE: |

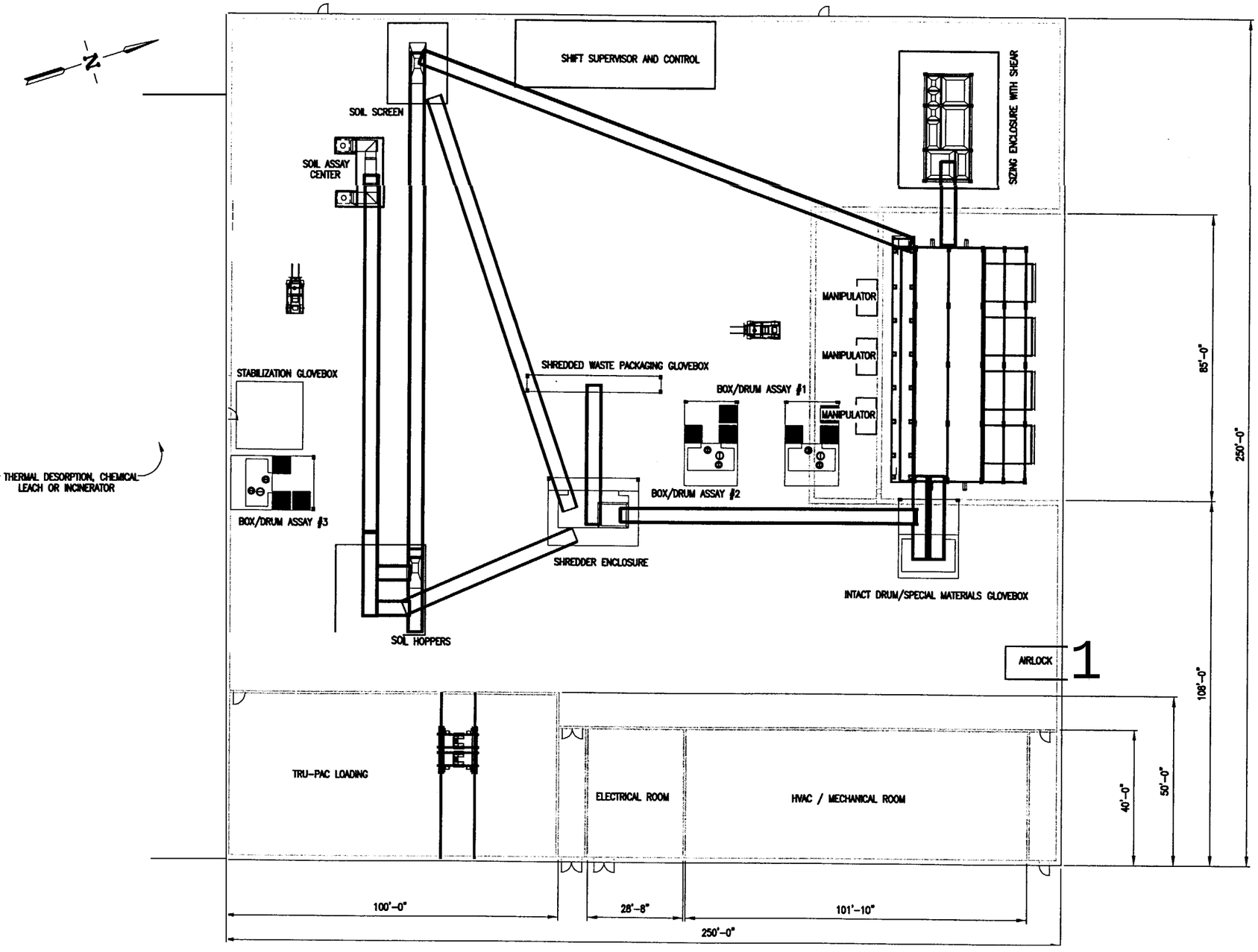


FLOOR PLAN

**RELEASED**
**FOR RECORD ONLY**
**DO NOT FABRICATE**

| | | |
|---|---|---|
| FOR DRAWING INDEX SEE DRAWING NO. 624961 | SUBCONTRACT NO. N/A | INEEL (Idaho National Engineering & Environmental Laboratory) BECHTEL BWXT IDAHO, LLC |
| 1/8" 3" 5" 10" 20" SCALE: 1/16" = 1'-0" | REQUESTER: S.L. AUSTAD<br>DESIGN: WM. LANDMAN<br>DRAWN: L.M. WHITEHEAD 6-03 | OU 7-10, PIT 9 REMEDIATION PROJECT<br>TREATMENT OPTION 4A<br>WASTE RECEIVING AND PACKAGING FACILITY FLOOR PLAN<br>FLOOR PLAN |
| | PROJECT NO. 023203<br>SPCL CODE REC REL | SIZE D · CAGE CODE 01MF3 · INDEX CODE NUMBER AREA 098 TYPE 9999 CL 00 ORG 090 · DWG-624964 · REV |
| DESIGN PHASE: PRE CON | FOR REVIEW/APPROVAL SIGNATURES SEE DAR NO. 104771 | |
| SAFETY CATEGORY: N/A | EFFECTIVE DATE: 9-30-2003 | SCALE: 1/16" = 1'-0" · SHEET 4A-A-1 |

T-01-REV 3.4

Date: 09/30/03 - 06:16 A.M. | Layout Name: Plan | ID: ABE

File: 624964.dwg
Path: T:\REV_0_RR_TREAT

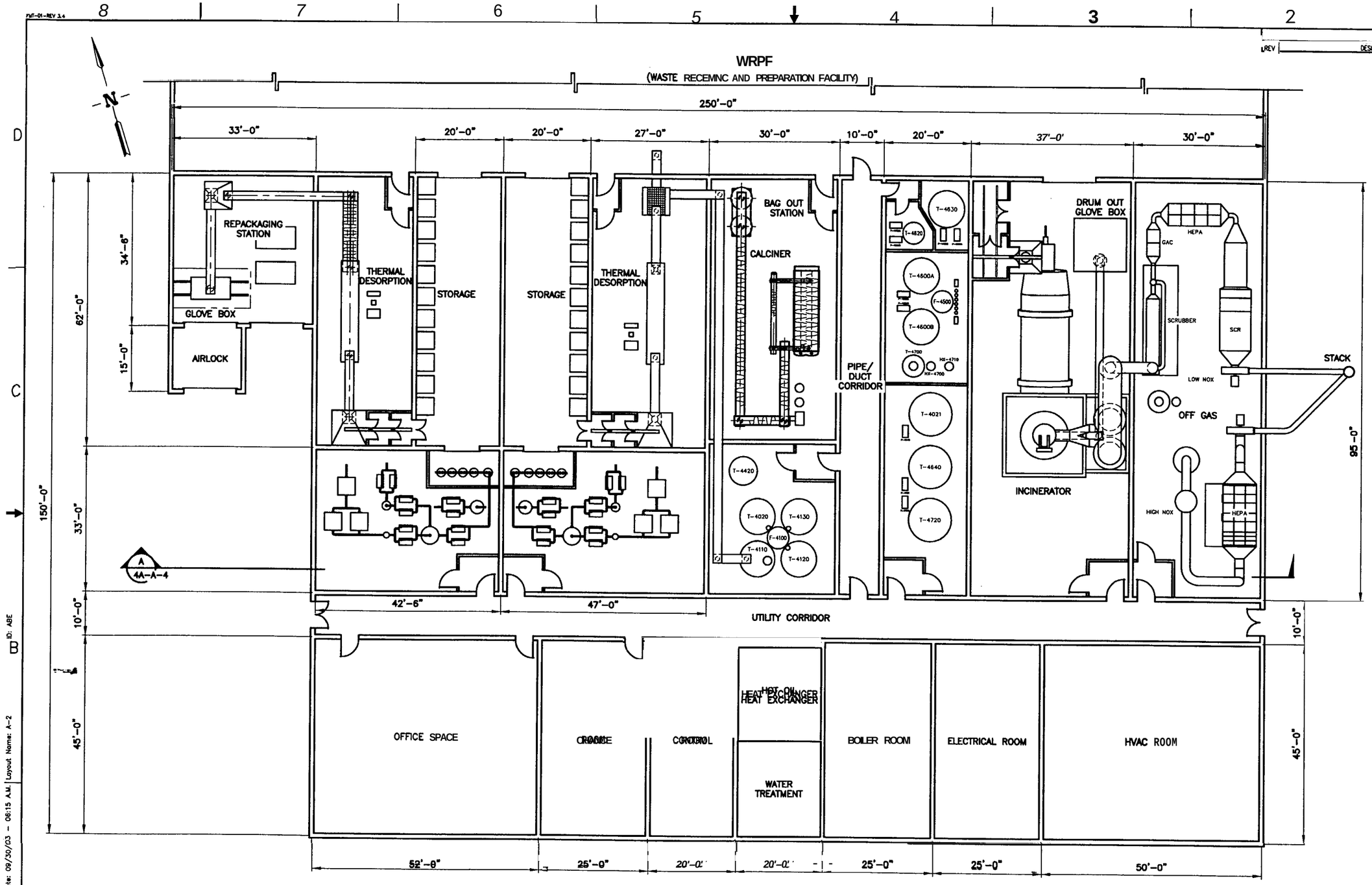


RELEASED
FOR RECORD ONLY
DO NOT FABRICATE

FIRST FLOOR PLAN

| | |
|---|---|
| FOR DRAWING INDEX SEE DRAWING NO. 624961 | SUBCONTRACT NO. N/A |
| SCALE: 3/32" = 1'-0" | REQUESTER: W.H.LANDMAN |
| | DESIGN: C.L. WILLIAMS |
| | DRAWN: R.G.Street |
| | PROJECT NO. 023203 |
| | SPCL CODE REC REL |
| DESIGN PHASE: PRE CON | FOR REVIEW/APPROVAL SIGNATURES SEE DAR NO. 104771 |
| SAFETY CATEGORY: N/A | EFFECTIVE DATE: 9-30-2003 |

INEEL (Idaho National Engineering & Environmental Laboratory) BECHTEL BWXT IDAHO, LLC

OU 7-10, PIT 9 REMEDIATION PROJECT
TREATMENT
OPTION 4A
THERMAL DESORPTION, CHEMICAL LEACH & INCINERATOR
FIRST FLOOR PLAN

| SIZE | CAGE CODE | INDEX CODE NUMBER AREA | TYPE | Q | ORG | DWG- | REV |
|---|---|---|---|---|---|---|---|
| D | 01MF3 | 098 | 9999 | 00 | 090 | 624965 | |

SCALE: 3/32" = 1'-0" SHEET 4A-A-2

Date: 09/30/03 – 06:15 A.M. Layout Name: A-2 ID: ABE
File: 624965.dwg
Path: T:\REV_0_RR_TREAT

| REVISIONS | | |
|---|---|---|
| REV | DESCRIPTION | EFFECTIVE DATE: |

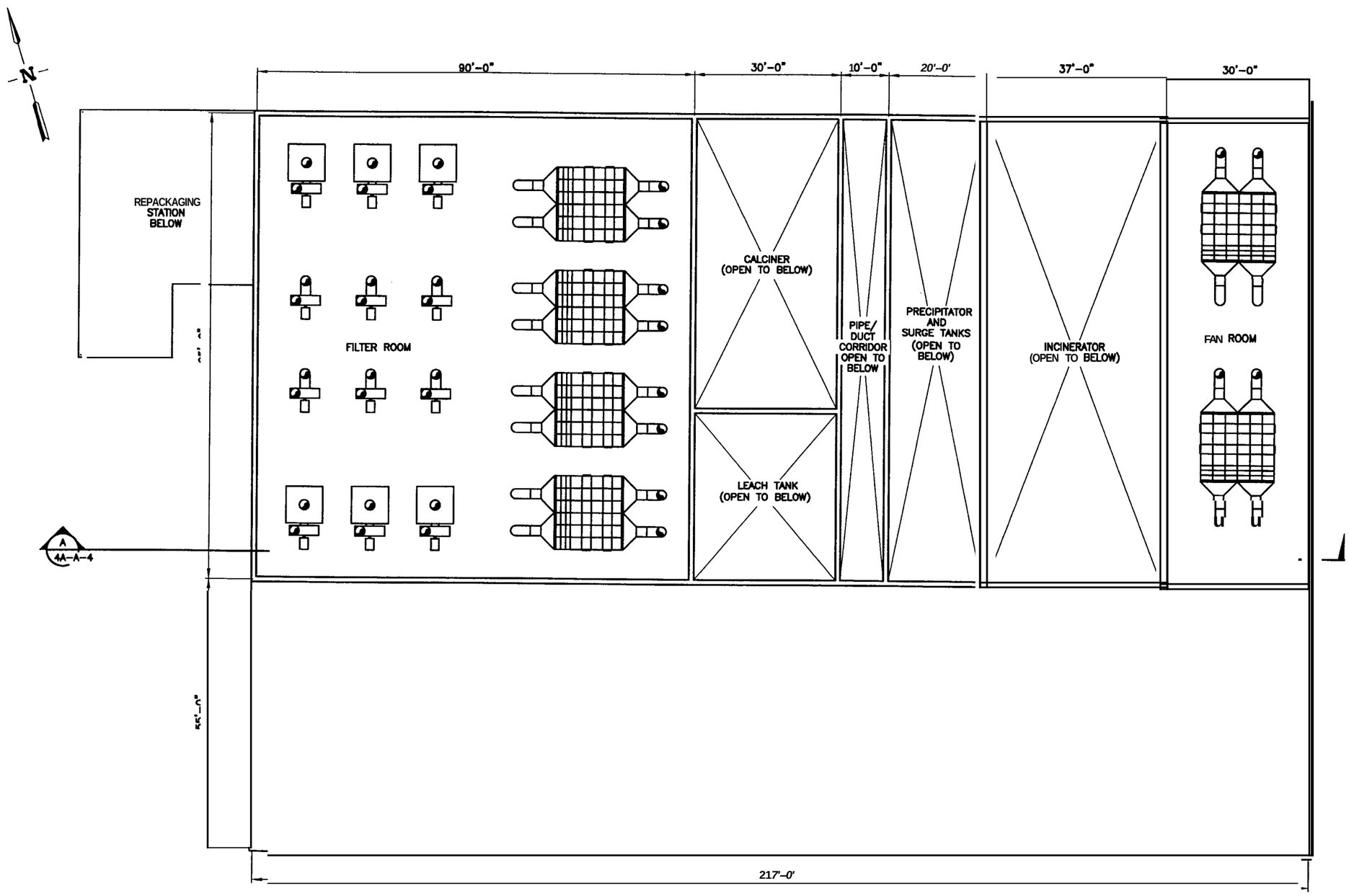


RELEASED
FOR RECORD ONLY
DO NOT FABRICATE

SECOND FLOOR PLAN

| | | |
|---|---|---|
| FOR DRAWING INDEX SEE DRAWING NO. 624961 | SUBCONTRACT NO. N/A | INEEL (Idaho National Engineering & Environmental Laboratory) BECHTEL BWXT IDAHO, LLC |
| 1' 0 1' 2' 3' 4' 5' 10' 20' SCALE: 3/32" = 1'-0" | REQUESTER: W.H.LANDMAN | OU 7-10, PIT 9 REMEDIATION PROJECT TREATMENT OPTION 4A THERMAL DESORPTION, CHEMICAL LEACH & INCINERATOR SECOND FLOOR PLAN |
| | DESIGN: C.L. WILLIAMS | |
| | DRAWN: R.G.Street | |
| | PROJECT NO. 023203 | |
| | SPCL CODE REC REL | |
| DESIGN PHASE: PRE CON | FOR REVIEW/APPROVAL SIGNATURES SEE DAR NO. 104771 | SIZE D; CAGE CODE 01MF3; INDEX CODE NUMBER AREA 098, TYPE 9999, CI 00, ORG 090; DWG- 624966; REV |
| SAFETY CATEGORY: N/A | EFFECTIVE DATE: 9-30-2003 | SCALE: 3/32" = 1'-0"; SHEET 4A-A-3 |

Date: 09/17/03 - 2:30 P.M. | Layout Name: A-3 | ID: ABE

File: 624966.dwg
Path: T:\REV 0 RR TREAT

FMT-01-REV 3.4

| REVISIONS | | |
|---|---|---|
| REV | DESCRIPTION | EFFECTIVE DATE: |

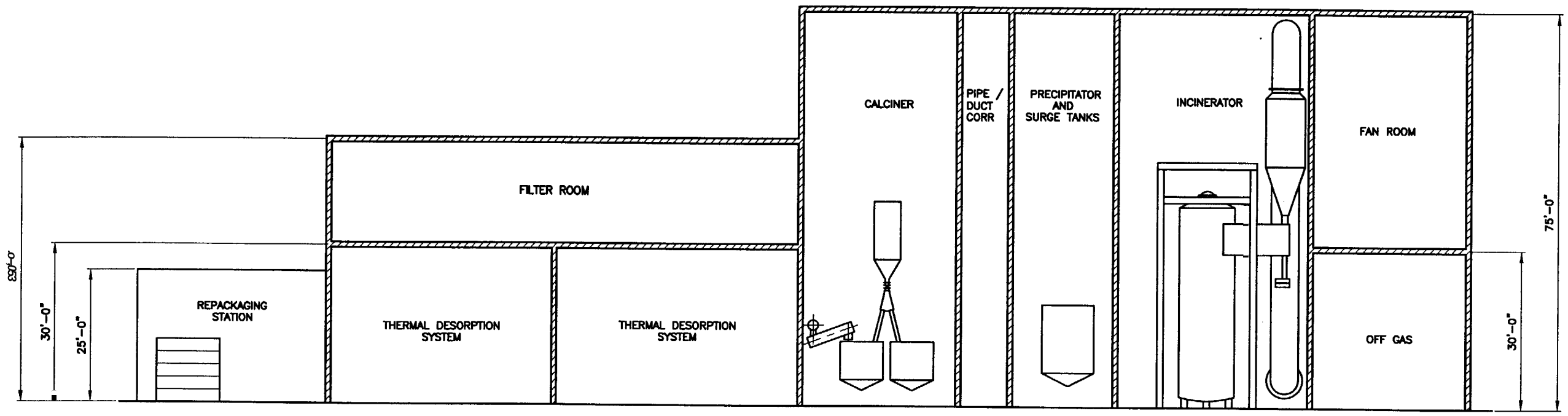


SECTION A 4A-A-4A-A-2

**RELEASED FOR RECORD ONLY**

**DO NOT FABRICATE**

| | | |
|---|---|---|
| FOR DRAWING INDEX SEE DRAWING NO. 624961 | SUBCONTRACT NO. N/A | INEEL (Idaho National Engineering & Environmental Laboratory) BECHTEL BWXT IDAHO, LLC |
| SCALE: 3/32" = 1'-0" | REQUESTER: W.H.LANDMAN<br>DESIGN: C.L. WILLIAMS<br>DRAWN: R.G.Street<br>PROJECT NO. 023203<br>SPCL CODE REC REL | OU 7-10, PIT 9 REMEDIATION PROJECT<br>TREATMENT<br>OPTION 4A<br>THERMAL DESORPTION, CHEMICAL LEACH & INCINERATOR<br>SECTION |
| DESIGN PHASE: PRE CON | FOR REVIEW/APPROVAL SIGNATURES SEE DAR NO. 104771 | SIZE D; CAGE CODE 01MF3; INDEX CODE NUMBER AREA 098 TYPE 9999 CL 00 ORG 090; DWG-624967; REV |
| SAFETY CATEGORY: N/A | EFFECTIVE DATE: 9-30-2003 | SCALE: 3/32" = 1'-0"; SHEET 4A-A-4 |

Date: 09/30/03 - 06:20 A.M. | Layout Name: A-4 | ID: ABE

Path: T:\REV_0_RR_TREAT\624967.dwg

| REV | DESCRIPTION | EFFECTIVE DATE: |
|---|---|---|

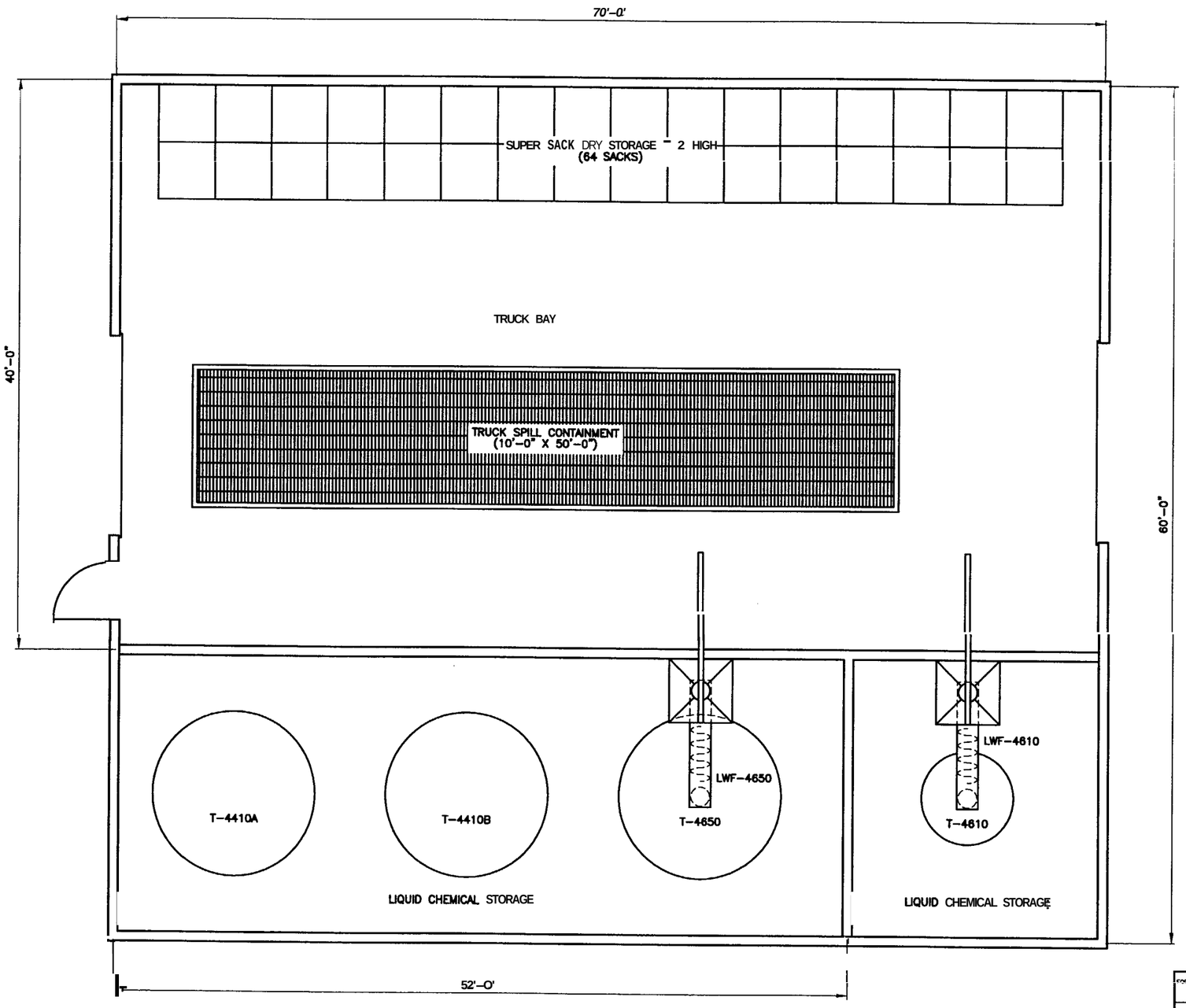


FLOOR PLAN

**RELEASED**
**FOR RECORD ONLY**
**DO NOT FABRICATE**

| | | |
|---|---|---|
| FOR DRAWING INDEX SEE DRAWING NO. 624961 | SUBCONTRACT NO. N/A | INEEL (Idaho National Engineering & Environmental Laboratory) LOCKHEED MARTIN IDAHO, LLC |
| SCALE: 1/4" = 1'-0" | REQUESTER: W.H.LANDMAN | OU 7-10, PIT 9 REMEDIATION PROJECT |
| | DESIGN: C.L. WILLIAMS | TREATMENT |
| | DRAWN: R.G.Street | OPTION 4A |
| | PROJECT NO. 023203 | CHEMICAL STORAGE BUILDING |
| | SPCL CODE REC REL | FIRST FLOOR PLAN |
| DESIGN PHASE: PRE CON | FOR REVIEW/APPROVAL SIGNATURES SEE DAR NO. 104771 | SIZE D · CAGE CODE 01MF3 · INDEX CODE NUMBER AREA 098 TYPE 9999 CL 00 DBC 090 · DWG-624968 · REV |
| SAFETY CATEGORY: N/A | EFFECTIVE DATE: 9-30-2003 | SCALE: 1/4" = 1'-0" · SHEET 4A-A-5 |

Date: 09/30/03 - 06:20 A.M. | Layout Name: A-5 | ID: AEE
File: 624968.dwg
Path: T:\REV_0_RR_TF\EAT

| REVISIONS | | |
|---|---|---|
| REV | DESCRIPTION | EFFECTIVE DATE: |

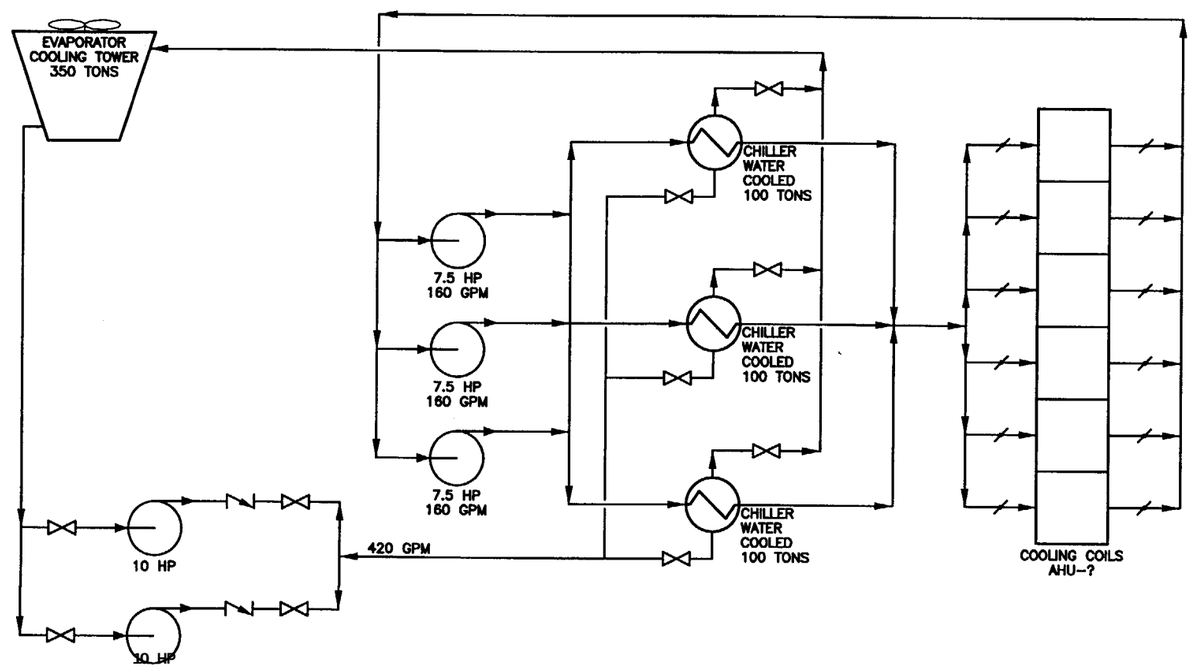


CHILLER SYSTEM FLOW DIAGRAM

**RELEASED**
**FOR RECORD ONLY**
**DO NOT FABRICATE**

| | | |
|---|---|---|
| FOR DRAWING INDEX SEE DRAWING NO. 624961 | SUBCONTRACT NO. N/A | INEEL (Idaho National Engineering & Environmental Laboratory) BECHTEL BWXT IDAHO, LLC |
| NO SCALE | REQUESTER: W.H.LANDMAN<br>DESIGN: C.L. WILLIAMS<br>DRAWN: R.G.Street<br>PROJECT NO. 023203<br>SPCL CODE REC REL | OU 7-10, PIT 9 REMEDIATION PROJECT<br>TREATMENT<br>OPTION 4A<br>THERMAL DESORPTION, CHEMICAL LEACH & INCINERATOR<br>CHILLER SYSTEM FLOW DIAGRAM |
| DESIGN PHASE: PRE CON | FOR REVIEW/APPROVAL SIGNATURES SEE DAR NO. 104771 | SIZE D; CAGE CODE 01MF3; INDEX CODE NUMBER AREA 098 TYPE 9999 CL 52 ORG 090; DWG-624969; REV |
| SAFETY CATEGORY: N/A | EFFECTIVE DATE: 9-30-2003 | SCALE: NONE; SHEET 4A-P-1 |

File: 624969.dwg
Path: T:\ERV\ 0 RR TRFAT
Date: 09/30/03 – 2:03 P.M. | Layout Name: Sheet 1
ID: ABE

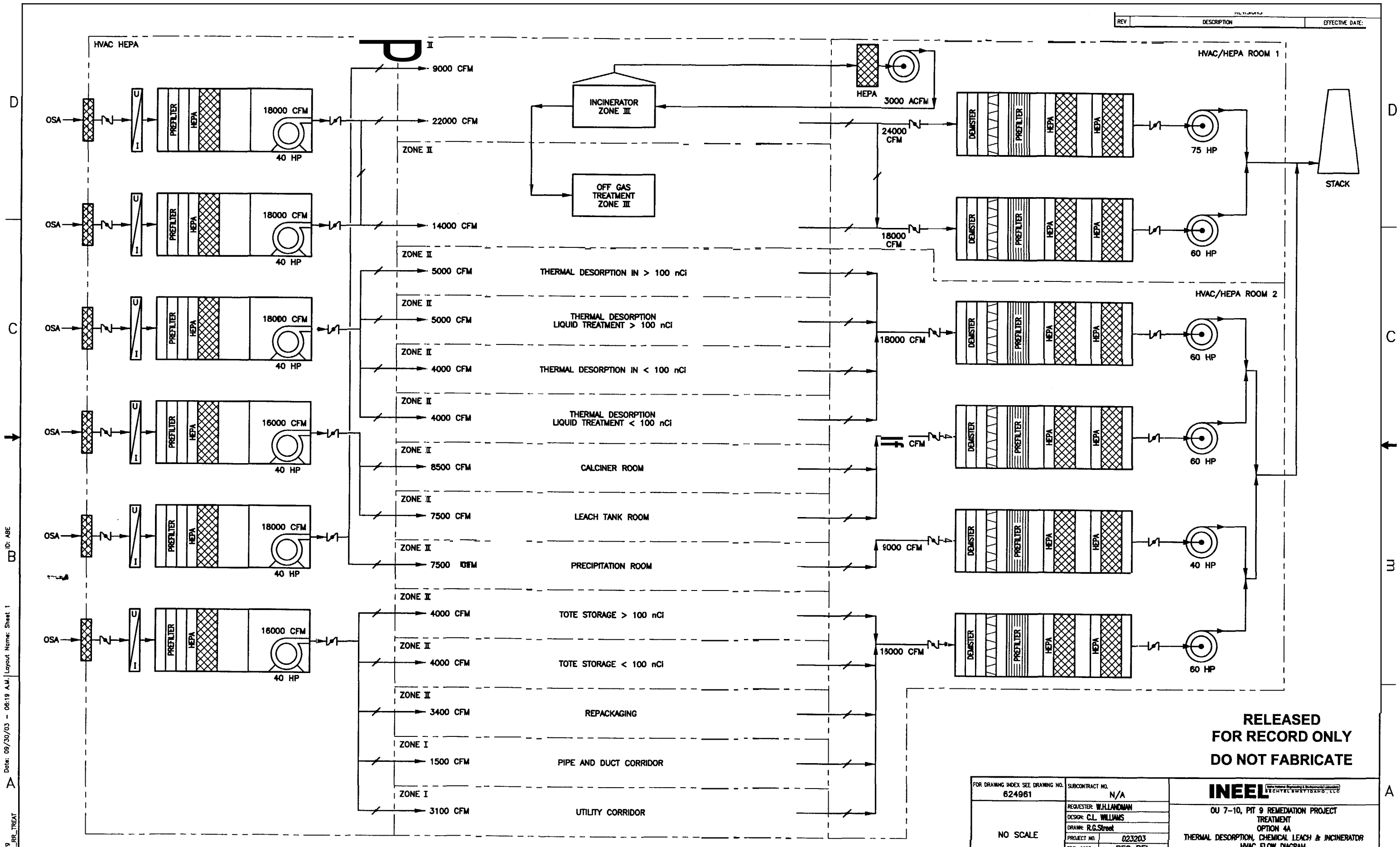


HVAC FLOW DIAGRAM

RELEASED FOR RECORD ONLY

DO NOT FABRICATE

| | | |
|---|---|---|
| FOR DRAWING INDEX SEE DRAWING NO. 624961 | SUBCONTRACT NO. N/A | INEEL |
| NO SCALE | REQUESTER: W.H.LANDMAN | OU 7-10, PIT 9 REMEDIATION PROJECT TREATMENT OPTION 4A THERMAL DESORPTION, CHEMICAL LEACH & INCINERATOR HVAC FLOW DIAGRAM |
| | DESIGN: C.L. WILLIAMS | |
| | DRAWN: R.G.Street | |
| | PROJECT NO. 023203 | |
| | SPCL CODE REC REL | |
| DESIGN PHASE: PRE CON | FOR REVIEW/APPROVAL SIGNATURES SEE DAR NO. 104771 | SIZE D; CAGE CODE 01MF3; INDEX CODE NUMBER AREA 098, TYPE 9999, CL 20, ORIG 090; DWG- 624970; REV |
| SAFETY CATEGORY: N/A | EFFECTIVE DATE: 9-30-2003 | SCALE: NONE; SHEET 4A-HV-1 |

| REV. | DESCRIPTION | EFFECTIVE DATE: |
|---|---|---|

Date: 09/30/03 - 06:19 A.M. | Layout Name: Sheet 1 | ID: ABE

Name: 624970.dwg
Path: T:\REV_0_RR_TREAT

| REVISIONS | | |
|---|---|---|
| REV | DESCRIPTION | EFFECTIVE DATE: |

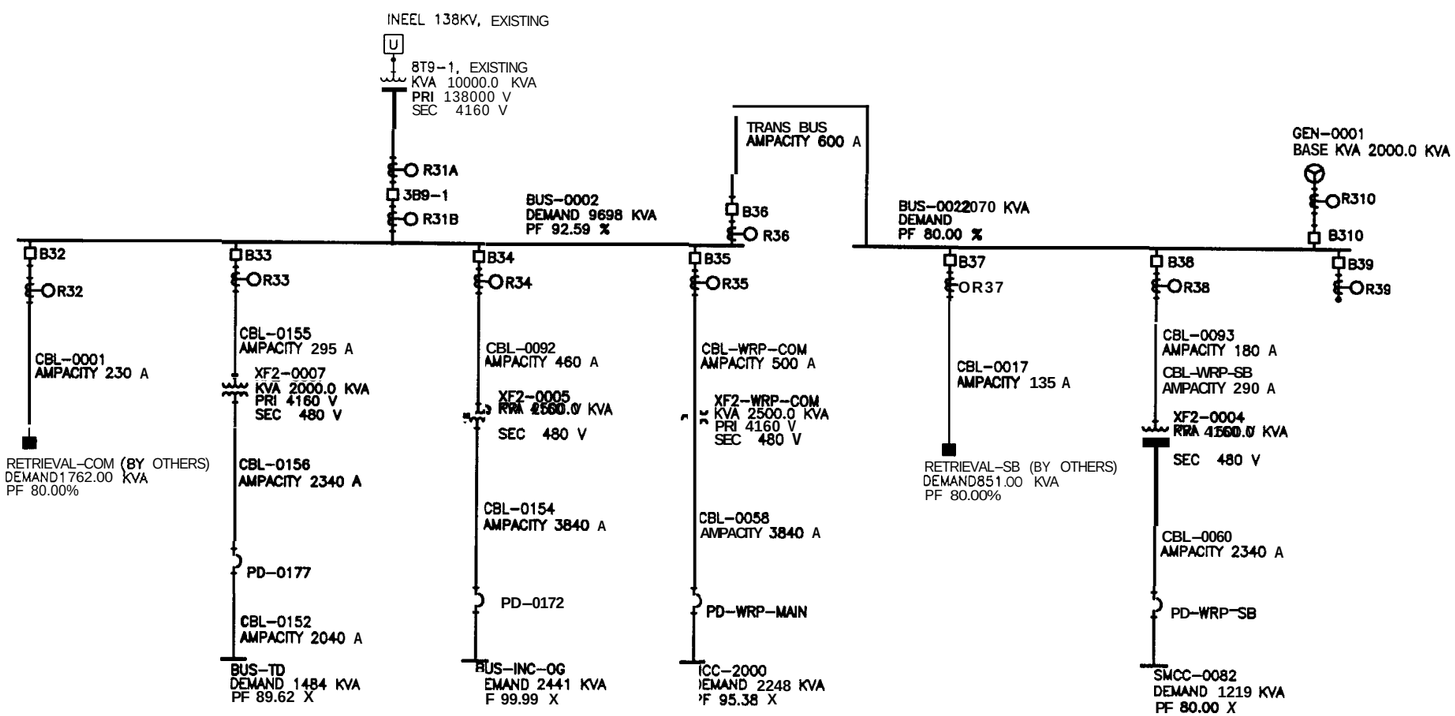


OPTION 4A

ONELINE **DIAGRAM.** 3P

**RELEASED**
**FOR RECORD ONLY**

**DO NOT FABRICATE**

| | | |
|---|---|---|
| FOR DRAWING INDEX SEE DRAWING NO. 624961 | SUBCONTRACT NO. N/A | INEEL (Idaho National Engineering & Environmental Laboratory) BECHTEL BWXT IDAHO, LLC |
| NO SCALE | REQUESTER: SL AUSTAD<br>DESIGN: BL COWLEY<br>DRAWN: BL COWLEY<br>PROJECT NO. 023203<br>SPCL CODE REC REL | OU 7-10, PIT 9 REMEDIATION PROJECT TREATMENT<br>OPTION 4A<br>ELECTRICAL ONELINE DIAGRAM, 3P |
| DESIGN PHASE: PRE-CON | FOR REVIEW/APPROVAL SIGNATURES SEE DAR NO. 104771 | SIZE D · CAGE CODE 01MF3 · INDEX CODE NUMBER AREA 098 TYPE 9999 CL 10 DRG 090 · DWG- 624971 · REV |
| SAFETY CATEGORY: N/A | EFFECTIVE DATE: 9-30-2003 | SCALE: NONE · SHEET 4A-E-1 |

Date: 09/30/03 – 06:30 A.M. | Layout Name: Layout1 | ID: ABE

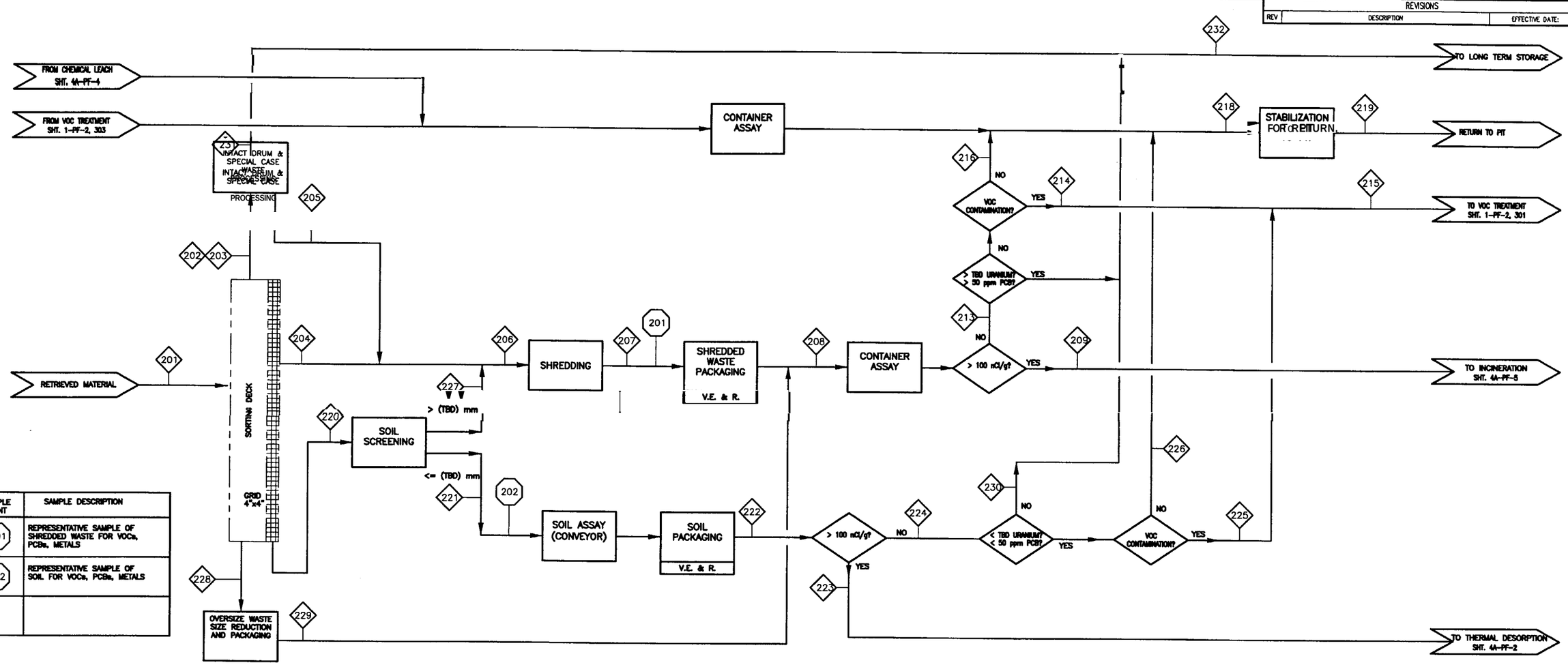


| SAMPLE POINT | SAMPLE DESCRIPTION |
|---|---|
| 201 | REPRESENTATIVE SAMPLE OF SHREDDED WASTE FOR VOCs, PCBs, METALS |
| 202 | REPRESENTATIVE SAMPLE OF SOIL FOR VOCs, PCBs, METALS |
| | |

| | 201 RETRIEVED MATERIAL | 202 INTACT DRUMS | 203 SPECIAL CASE WASTE | 204 LOOSE WASTE | 205 WASTE FROM INTACT DRUMS | 206 WASTE TO SHREDDER | 207 SHREDDED WASTE | 208 PACKAGED WASTE | 209 WASTE TO INCINERATOR >100nCi/g | 210 | 211 | 212 | 213 PACKAGED WASTE <=100nCi/g | 214 PACKAGED WASTE TO TD | 215 TOTAL TO TD |
|---|---|---|---|---|---|---|---|---|---|---|---|---|---|---|---|
| TOTAL MASS (KG) | 20,000,000 | TBD | TBD | TBD | TBD | 1,090,000 | 1,090,000 | 1,310,000 | 654,000 | | | | 654,000 | 0 | 9,900,000 |
| TOTAL VOLUME (M3) | 18,900 | TBD | TBD | TBD | TBD | 3,740 | 1,870 | 2,240 | 1,120 | | | | 1,120 | 0 | 9,100 |
| NUMBER OF CONTAINERS | TBD | TBD | N.A. | N.A. | N.A. | N.A. | N.A. | 2,100 INSERTS SEE NOTES 5, 6 | 1,050 INSERTS SEE NOTES 5, 6 | | | | 1,050 INSERTS SEE NOTES 5, 6 | 0 | 8,500 INSERTS SEE NOTES 5, 6 |
| PROCESSING RATE | 1.97 M3/HR | TBD | TBD | TBD | TBD | TBD | – | – | – | | | | – | | 1,030 KG/HR |

| | 216 NON-TRU NON-VOC WASTE | 217 | 218 TOTAL FOR STABILIZATION | 219 STABILIZED MATERIAL TO PIT | 220 SOIL, SLUDGE & MISC DEBRIS | 221 SCREENED SOIL & SLUDGE | 222 PACKAGED SOIL & SLUDGE | 223 SOIL TO TD, CHEM LEACH >100 nCi/g | 224 PACKAGED SOIL <=100 nCi/g | 225 VOC SOIL & SLUDGE TO TD | 226 NON-VOC SOIL | 227 SCREENED DEBRIS | 228 OVERSIZE MAT'L | 229 PACKAGED SIZED MAT'L | 230 URANIUM CONTAMINATED MATERIAL | 231 SPECIAL CASE WASTE | 232 TOTAL TO LONG TERM STORAGE |
|---|---|---|---|---|---|---|---|---|---|---|---|---|---|---|---|---|---|
| TOTAL MASS (KG) | 654,000 | | TBD | TBD | 18,900,000 | 18,900,000 | 19,800,000 | 9,900,000 | 9,900,000 | 9,900,000 | 0 | TBD | TBD | TBD | TBD | TBD | TBD |
| TOTAL VOLUME ($M^3$) | 1,120 | | TBD | TBD | 15,100 | 15,100 | 18,200 | 9,100 | 9,100 | 9,100 | 0 | TBD | TBD | TBD | TBD | TBD | TBD |
| NUMBER OF CONTAINERS | 1,050 INSERTS SEE NOTES 5, 6 | | TBD | TBD | N.A. | N.A. | 17,000 INSERTS SEE NOTES 5, 6 | 8,500 INSERTS SEE NOTES 5, 6 | 8,500 INSERTS SEE NOTES 5, 6 | 8,500 INSERTS SEE NOTES 5, 6 | 0 | TBD | TBD | TBD | TBD | TBD | TBD |
| PROCESSING RATE (M3/HR) | | | | | | | | | | | | | | | | | |

## NOTES

1. RETRIEVAL OPERATING BASIS: 12 HRS/DAY.
2. TREATMENT OPERATING BASIS: 2 YRS, 200 DAYS/YR, 24 HRS/DAY.
3. SLUDGE IS ASSUMED TO BE LOOSE AND MIXED WITH SOIL FOR VOLUME AND MASS CALCULATIONS.
4. V.E. & R. = VISUALLY EXAMINE AND RECORD PACKAGING TO MEET WIPP CRITERIA.
5. SBW INSERTS ARE APPROX 48" X 44" X 34"HIGH. INTERNAL VOLUME APPROX 38 CU FT. INSERTS MAY BE CONVERTED TO TOTES FOR TRANSPORT TO TREATMENT PROCESS.
6. INSERT QUANTITIES SHOWN HERE. SOIL AND WASTE MAY BE PACKAGED DIFFERENTLY TO SUPPORT TREATMENT FEED AND RETURN-TO-PIT REQUIREMENTS.
7. ALL SOIL <= 100 nCi/g WAS ASSUMED TO CONTAIN VOCs. ALL WASTE <= 100 nCi/g WAS ASSUMED TO FREE OF VOCs.

**RELEASED FOR RECORD ONLY**

**DO NOT FABRICATE**

| REV | DESCRIPTION | EFFECTIVE DATE: |
|---|---|---|

FOR DRAWING INDEX SEE DRAWING NO. 624961

NO SCALE

DESIGN PHASE: PRE CON

SAFETY CATEGORY: N/A

SUBCONTRACT NO. N/A

REQUESTER: W.H.LANDMAN

DESIGN: A.W.DOEHL

DRAWN: R.G.Street

PROJECT NO. 023203

SPCL CODE REC REL

FOR REVIEW/APPROVAL SIGNATURES SEE DAR NO. 104771

EFFECTIVE DATE: 9-30-2003

INEEL Idaho National Engineering & Environmental Laboratory BECHTEL BWXT IDAHO, LLC

OU 7-10, PIT 9 REMEDIATION PROJECT
TREATMENT
OPTION 4A
THERMAL DESORPTION, CHEMICAL LEACH, & INCINERATION
PROCESS FLOW DIAGRAM

| SIZE | CAGE CODE | INDEX CODE NUMBER AREA | TYPE | CL | ORIG | DWG- | REV |
|---|---|---|---|---|---|---|---|
| D | 01MF3 | 098 | 9999 | 28 | 090 | 624972 | |

SCALE: NONE

SHEET 4A-PF-1

File: 624972.dwg
Path: T:\REV_0_RR_TREAT
Date: 09/30/03 - 08:29 A.M. | Layout Name: Layout1
ID: ABE

| REVISIONS | | |
|---|---|---|
| REV | DESCRIPTION | EFFECTIVE DATE: |

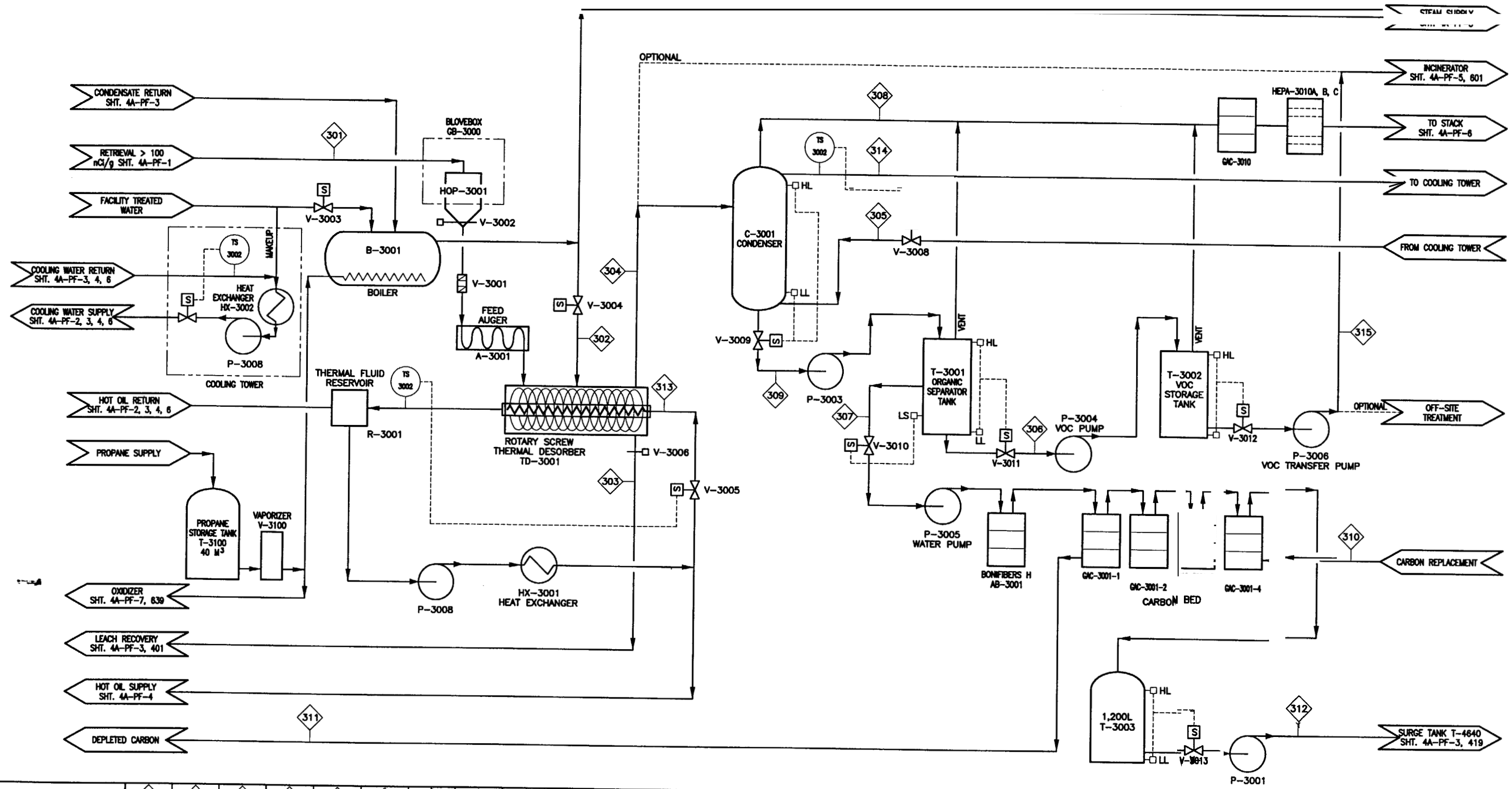


| | 301 | 302 | 303 | 304 | 305 | 306 | 307 | 308 | 309 | 310 | 311 | 312 | 313 | 314 | 315 |
|---|---|---|---|---|---|---|---|---|---|---|---|---|---|---|---|
| | SOIL DEBRIS | STEAM SWEEP GAS | TD SOIL | STEAM AND VOC | COOLING WATER SUPPLY | VOC'S | WATER AND SOLUBLE ORGANICS | CONDENSATE OFF GAS | CONDENSATE | CARBON REPLACEMENT | CARBON DEPLETION | WATER | HOT OIL | COOLING WATER RETURN | VOC'S TO INCINERATOR |
| FLOW RATE (KG/HR) | 983 | 39 | 720 | 300 | TBD | 9 | 293 | TBD | 300 | 14 | 10 | 292 | | TBD | 18 |
| TEMPERATURE (°C) | 15 | 200 | 150 | 150 | 15 | 30 | 30 | 50 | 30 | | | 30 | 200 | 50 | 30 |
| | | | | | | | | | | | | | | | |
| | | | | | | | | | | | | | | | |

**RELEASED FOR RECORD ONLY**

**DO NOT FABRICATE**

| | | |
|---|---|---|
| FOR DRAWING INDEX SEE DRAWING NO. 624961 | SUBCONTRACT NO. N/A | INEEL (Idaho National Engineering & Environmental Laboratory) BECHTEL BWXT IDAHO, LLC |
| NO SCALE | REQUESTER: W.H.LANDMAN<br>DESIGN: A.W.LOEHL<br>DRAWN: R.G.Street<br>PROJECT NO. 023203<br>SPCL CODE REC REL | OU 7-10, PIT 9 REMEDIATION PROJECT<br>TREATMENT<br>OPTION 4A<br>THERMAL DESORPTION, CHEMICAL LEACH & INCINERATION<br>PROCESS FLOW DIAGRAM |
| DESIGN PHASE: PRE CON | FOR REVIEW/APPROVAL SIGNATURES SEE DAR NO. 104771 | SIZE D · CAGE CODE 01MF3 · INDEX CODE NUMBER AREA 098 TYPE 9999 CL 28 ORG 090 · DWG- 624973 · REV |
| SAFETY CATEGORY: N/A | EFFECTIVE DATE: 9-30-2003 | SCALE: NONE · SHEET 4A-PF-2 |

Date: 09/30/03 - 08:28 A.M. | Layout Name: Layout1 | ID: ABE

path: T:\REV_0_RR_TREAT

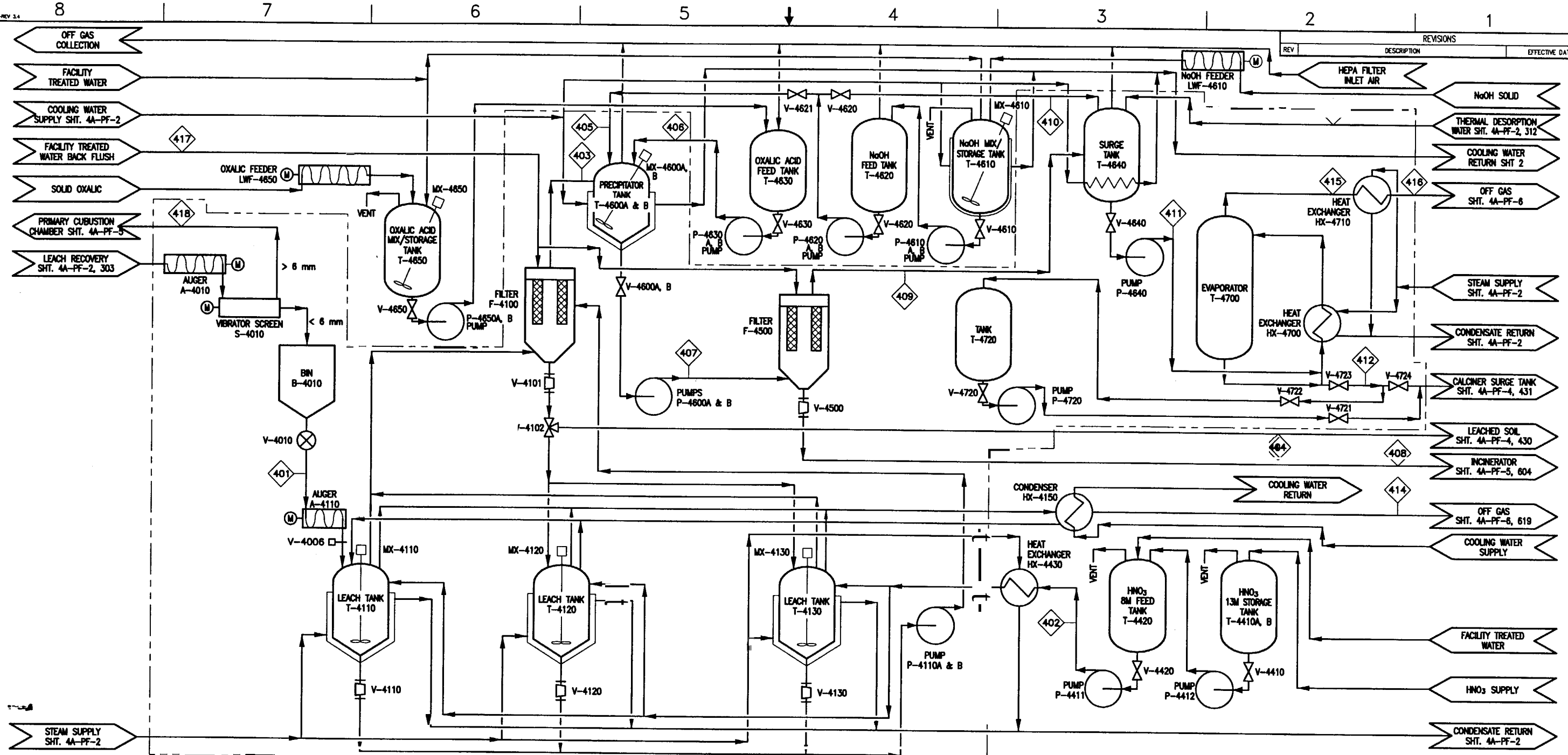


| | 401 | 402 | 403* | 404* | 405* | 406* | 407* | 408* | 409* | 410* | 411 | 412 | 413 | 414 | 415 | 416 | 417 | 418 | 419 |
|---|---|---|---|---|---|---|---|---|---|---|---|---|---|---|---|---|---|---|---|
| | DRY SOIL | 8M NITRIC | LEACH FILTRATE | FILTER CAKE | 50% NaOH | 1.4M OXALIC | FILTER FEED | FILTER CAKE | PRECIP FILTRATE | 50% NaOH | EVAP. FEED | EVAP. CONC. | | CO2 OFF GAS | EVAP. VAPOR | EVAP. VAPOR | FACILITY WATER BACKFLUSH | DEBRIS ** | |
| TRU nCi/gm | 1,000 | 0 | 490 | 18.4 | – | 0 | 186 | 2,700 | 4 | – | 4 | 10 | | 0 | 0 | 0 | TBD | TBD | |
| OXALIC ACID (Kg/HR) | 0 | – | – | – | – | 210 | 0 | 0 | – | – | – | – | | 0 | – | – | | | |
| FLOW RATE (Kg/HR) | 720 | 1,500 | 1,450 | 700 * | 630 | 1,740 | 3,800 * | 250 * | 3,500 * | 200 * | 4,000 | 1,440 | | 73 | 2,600 | 2,600 | | | |
| TEMPERATURE (°C) | 25 | 25 | 90 | 90 | 25 | 25 | 25 | 25 | 25 | 25 | 25 | 100 | | 80 | 95 | 120 | | | |
| DENSITY Kg/L | 1.5 | 1.24 | 1.25 | 1.4 | 1.53 | 1.04 | 1.4 | 1.9 | 1.4 | 1.53 | 1.3 | 1.6 | | – | – | – | | | |
| WATER (Kg/HR) | 0 | 900 | 830 | 100 | 315 | 1,530 | 2,700 | 40 | 2,700 | 100 | 3,100 | 540 | | – | 2,600 | 2,600 | | | 292 |
| $HNO_3$ (Kg/HR) | – | 600 | 300 | 70 | – | – | 90 | 1.24 | 90 | – | 0 | 0 | | – | 0 | 0 | | | |
| CAUSTIC (Kg/HR) | – | – | 0 | – | 315 | – | 0 | 0 | – | 100 | 50 | 50 | | – | – | – | | | |
| *** TDS (Kg/HR) | – | 0 | 320 | 3 | 0 | 0 | 740 | 10 | 730 | 0 | 850 | 850 | | – | – | – | | | |
| TSS (Kg/HR) | – | 0 | 0.5 | 2 | 0 | 0 | 210 | 200 | 4 | 0 | 4 | 4 | | – | – | – | | | |
| GAS (SCMH) | – | – | | 0 | – | – | – | – | – | – | – | – | | 37 | 3,200 | 3,200 | | | |

* AVERAGE RATES FOR BATCH PROCESS

** DEBRIS GREATER THAN 6mm THAT CAN INTERFER WITH LEACH PROCESS – QUANTITY TO BE DETERMINED.

*** TDS DOES NOT INCLUDE HNO3, NaOH OR OXALIC ACID.

**RELEASED FOR RECORD ONLY**

**DO NOT FABRICATE**

| REV | DESCRIPTION | EFFECTIVE DATE: |
|---|---|---|
| | | |

FOR DRAWING INDEX SEE DRAWING NO. 624961

NO SCALE

DESIGN PHASE: PRE CON

SAFETY CATEGORY: N/A

SUBCONTRACT NO. N/A

REQUESTER: W.H.LANDMAN
DESIGN: S.ASHWORTH
DRAWN: R.G.Street
PROJECT NO. 023203
SPCL CODE REC REL
FOR REVIEW/APPROVAL SIGNATURES SEE DAR NO. 104771
EFFECTIVE DATE: 9-30-2003

INEEL (Idaho National Engineering & Environmental Laboratory) BECHTEL BWXT IDAHO, LLC

OU 7-10, PIT 9 REMEDIATION PROJECT
TREATMENT
OPTION 4A
THERMAL DESORPTION, CHEMICAL LEACH & INCINERATION
PROCESS FLOW DIAGRAM

SIZE D | CAGE CODE 01MF3 | INDEX CODE NUMBER AREA 098 TYPE 9999 CL 28 ORG 090 | DWG-624974 | REV

SCALE: NONE | SHEET 4A-PF-3

Date: 09/30/03 – 06:27 A.M. | Layout Name: Sheet 1 | ID: ABE

File: 624974.dwg
Path: T:\REV_0_RR_TREAT

| REVISIONS | | |
|---|---|---|
| REV | DESCRIPTION | EFFECTIVE DATE: |

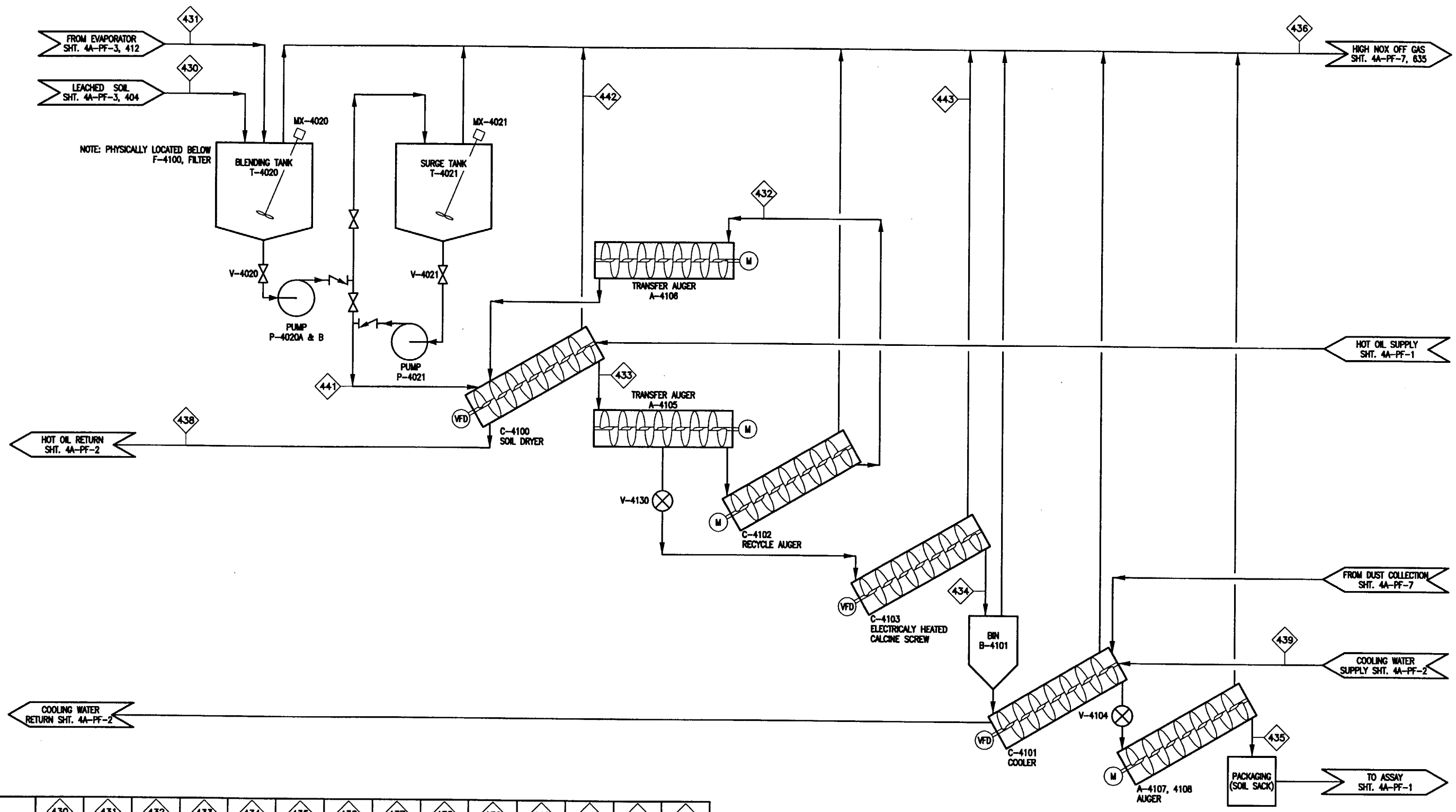


| | 430 SAND CAKE FROM LEACH | 431 EVAPORATOR BLOWDOWN | 432 SOLIDS RECYCLE | 433 DRY SOIL | 434 SOIL CALCINE | 435 SOIL DISCHARGE | 436 OFFGAS | 437 HOT OIL SUPPLY | 438 HOT OIL RETURN | 439 COOLING WATER SUPPLY | 440 COOLING WATER RETURN | 441 CALCINE FEED | 442 DRYER GAS | 443 CALCINE OFF GAS |
|---|---|---|---|---|---|---|---|---|---|---|---|---|---|---|
| TEMPERATURE (°C) | 90 | 93 | 150 | 150 | 700 | 54 | 315 | TBD | TBD | TBD | TBD | | 150 | 700 |
| MASS FLOW (Kg/hr) | 700 | 1,440 | 1,900 | 3,400 | 850 | 910 | 1,300 | TBD | TBD | TBD | TBD | 2,200 | 660 | 690 |
| % LIQUID (wt) | 25% | 100% | 0% | 0% | 0% | 0% | NA | | | | | | 0 | 0 |
| DENSITY (Kg/L) | 1.4 | 1.6 | 1.4 | 1.4 | 1.4 | 1.4 | | | | | | 1.6 | 4.8 X $10^{-4}$ | |

**RELEASED FOR RECORD ONLY**

**DO NOT FABRICATE**

| | |
|---|---|
| FOR DRAWING INDEX SEE DRAWING NO. 624961 | SUBCONTRACT NO. N/A |
| NO SCALE | REQUESTER: W.H.LANDMAN |
| | DESIGN: C.WILLIAMS |
| | DRAWN: R.G.Street |
| | PROJECT NO. 023203 |
| | SPCL CODE REC REL |
| DESIGN PHASE: PRE CON | FOR REVIEW/APPROVAL SIGNATURES SEE DAR NO. 104771 |
| SAFETY CATEGORY: N/A | EFFECTIVE DATE: 9-30-2003 |

INEEL (Idaho National Engineering & Environmental Laboratory) BECHTEL BWXT IDAHO, LLC

OU 7-10, PIT 9 REMEDIATION PROJECT
TREATMENT
OPTION 4A
THERMAL DESORPTION, CHEMICAL LEACH & INCINERATION
PROCESS FLOW DIAGRAM

| SIZE | CAGE CODE | INDEX CODE NUMBER AREA | TYPE | CL | ORG | DWG- | REV |
|---|---|---|---|---|---|---|---|
| D | 01MF3 | 098 | 9999 | 28 | 090 | 624975 | |

SCALE: NONE SHEET 4A-PF-4

File: 624975.dwg
Path: T:\REV_0_RR_TREAT
Date: 09/30/03 - 06:26 A.M. | Layout Name: Layout1
ID: ABE

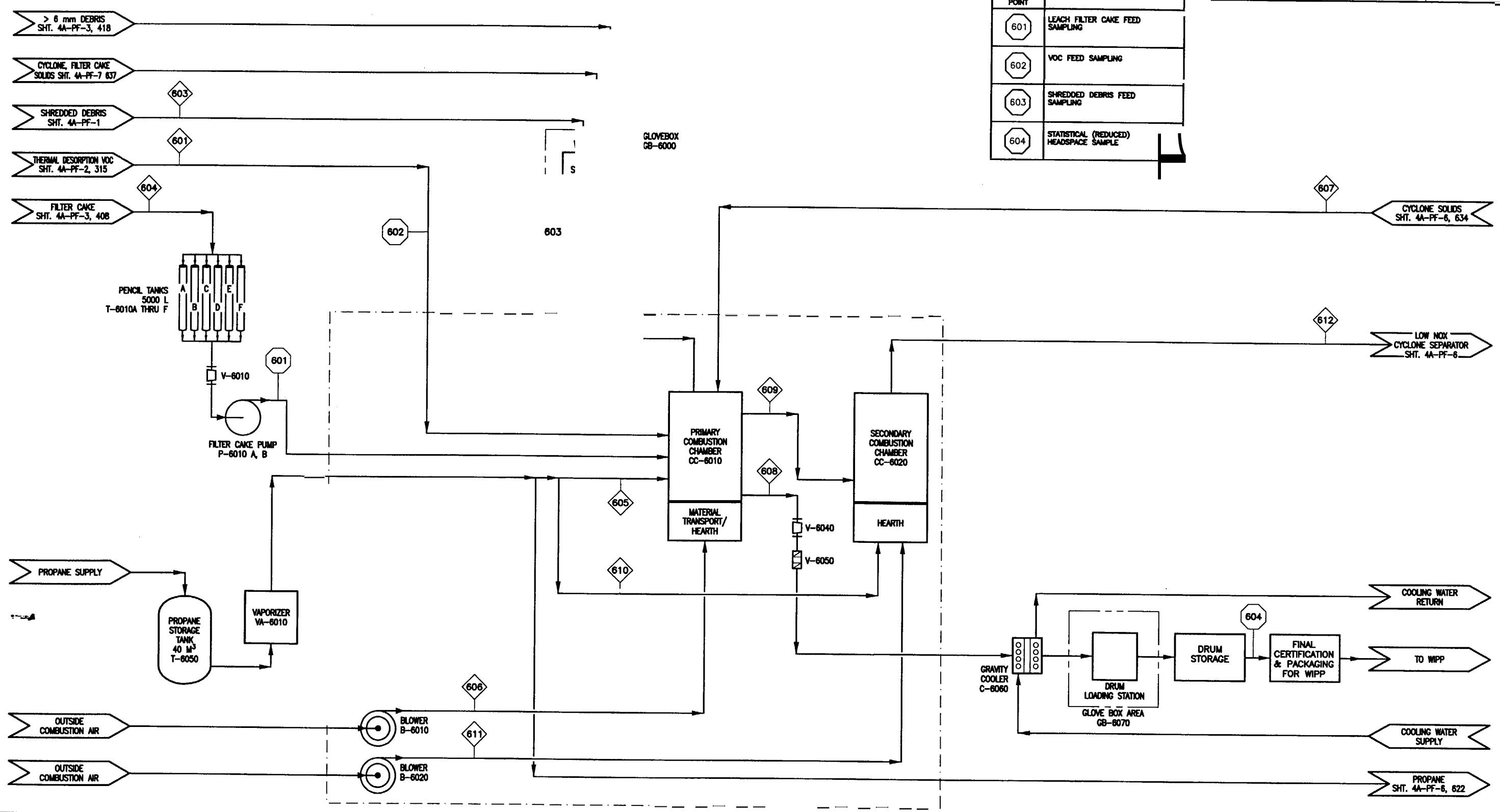


| SAMPLE POINT | SAMPLE DESCRIPTION |
|---|---|
| 601 | LEACH FILTER CAKE FEED SAMPLING |
| 602 | VOC FEED SAMPLING |
| 603 | SHREDDED DEBRIS FEED SAMPLING |
| 604 | STATISTICAL (REDUCED) HEADSPACE SAMPLE |

| REVISIONS | | |
|---|---|---|
| REV | DESCRIPTION | EFFECTIVE DATE: |

| | 601 | 602 | 603 | 604 | 605 | 606 | 607 | 608 | 609 | 610 | 611 | 612 |
|---|---|---|---|---|---|---|---|---|---|---|---|---|
| | TD LIQUID | | SHREDDED DEBRIS | SLUDGE | PROPANE | AIR | DUST | ASH | PRIMARY OFF GAS | PROPANE | AIR | SECONDARY OFF GAS |
| FLOW RATE (Kg/hr) | $9.0 \times 10^0$ | | $5.6 \times 10^1$ | $2.5 \times 10^2$ | $2.8 \times 10^1$ | $8.9 \times 10^2$ | $5.0 \times 10^1$ | $7.1 \times 10^1$ | $1.0 \times 10^3$ | $1.9 \times 10^1$ | $3.9 \times 10^2$ | $1.4 \times 10^3$ |
| PRESSURE (KPa) | 87 | | 87 | 87 | 87 | 87 | 87 | 87 | 87 | 87 | 87 | 87 |
| TEMPERATURE (°C) | 20 | | 20 | 20 | 20 | 20 | 900 | 900 | 900 | 20 | 20 | 1,100 |
| DENSITY ($Kg/m^3$) | | | | | $6.7 \times 10^{-1}$ | $5.5 \times 10^{-1}$ | | | $2.0 \times 10^{-1}$ | $1.6 \times 10^0$ | $1.0 \times 10^0$ | $1.8 \times 10^{-1}$ |

**RELEASED FOR RECORD ONLY**

**DO NOT FABRICATE**

| | | |
|---|---|---|
| FOR DRAWING INDEX SEE DRAWING NO. 624961 | SUBCONTRACT NO. N/A | INEEL (Idaho National Engineering & Environmental Laboratory) BECHTEL BWXT IDAHO, LLC |
| NO SCALE | REQUESTER: W.H.LANDMAN<br>DESIGN: S.PRIEBE<br>DRAWN: R.G.Street<br>PROJECT NO. 023203<br>SPCL CODE REC REL | OU 7-10, PIT 9 REMEDIATION PROJECT<br>TREATMENT<br>OPTION 4A<br>THERMAL DESORPTION, CHEMICAL LEACH & INCINERATION<br>PROCESS FLOW DIAGRAM |
| DESIGN PHASE: PRE CON | FOR REVIEW/APPROVAL SIGNATURES SEE DAR NO. 104771 | SIZE D; CAGE CODE 01MF3; INDEX CODE NUMBER AREA 098, TYPE 9999, Q 28, DRG 090; DWG- 624976; REV |
| SAFETY CATEGORY: N/A | EFFECTIVE DATE: 9-30-2003 | SCALE: NONE; SHEET 4A-PF-5 |

PMT-01-REV 3.4
Date: 09/30/03 - 06:25 A.M. | Layout Name: Sheet 1 | ID: ABE
File: 624976.dwg
Path: T:\REV_0_RR_TREAT

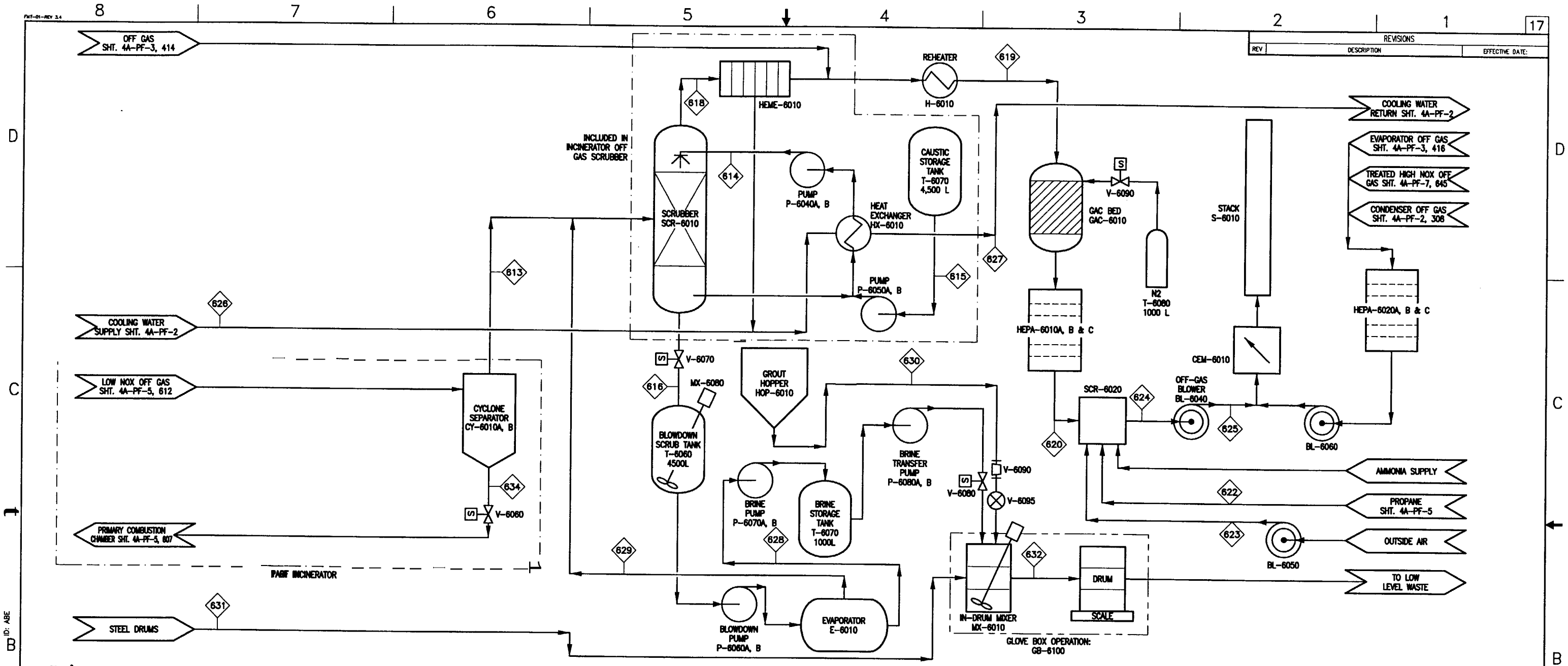


| | 613 INCINERATOR OFF GAS | 614 COLD SCRUB | 615 CAUSTIC | 616 BLOWDOWN | 617 HOT SCRUB | 618 SCRUB OFF GAS | 619 REHEAT OFF GAS | 620 SORBED OFF GAS | 622 PROPANE | 623 COMBUSTION AIR | 624 SCR | 625 STACK OFF GAS | 626 WATER SUPPLY | 627 WATER RETURN | 628 BRINE | 629 WATER VAPOR | 630 DRY GROUT | 631 STEEL DRUMS | 632 GROUTED BLOWDOWN | 634 CYCLONE SEPARATOR SOLIDS |
|---|---|---|---|---|---|---|---|---|---|---|---|---|---|---|---|---|---|---|---|---|
| MASS FLOW RATE (Kg/hr) | $1.4 \times 10^3$ | $1.9 \times 10^4$ | $4.0 \times 10^1$ | $8.6 \times 10^1$ | $1.9 \times 10^4$ | $1.4 \times 10^3$ | $1.4 \times 10^3$ | $1.4 \times 10^3$ | $2.0 \times 10^1$ | $4.0 \times 10^2$ | $1.9 \times 10^3$ | $1.9 \times 10^3$ | TBD | TBD | | $5.9 \times 10^1$ | | | | TBD |
| TEMPERATURE (°C) | 1,100 | 35 | 20 | 60 | 60 | 60 | 110 | 110 | 20 | 20 | 400 | 250 | | | | | | | | |
| PRESSURE (KPa) | 87 | 200 | 87 | 87 | 87 | 87 | 87 | 87 | | 87 | 87 | 87 | 20 | 60 | | | | | | |
| DENSITY (Kg/m³) | $1.8 \times 10^{-1}$ | $1.2 \times 10^3$ | $1.4 \times 10^3$ | $1.2 \times 10^3$ | $1.2 \times 10^3$ | $9.8 \times 10^{-1}$ | $8.5 \times 10^{-1}$ | $8.5 \times 10^{-1}$ | | | $3.5 \times 10^{-1}$ | $1.1 \times 10^{-1}$ | | | | | | | | |
| WATER (Kg/hr) | $1.6 \times 10^2$ | | $2.5 \times 10^1$ | $6.4 \times 10^1$ | | $1.8 \times 10^2$ | $1.8 \times 10^2$ | $1.8 \times 10^2$ | | | $2.2 \times 10^2$ | $2.2 \times 10^2$ | | | $4.7 \times 10^0$ | $5.9 \times 10^1$ | | | | |
| CHLORIDE (Kg/hr) | | | | | | | | | | | | | | | $7.8 \times 10^0$ | | | | | |
| NaCl (Kg/hr) | | | | | | | | | | | | | | | $1.2 \times 10^1$ | | | | | |
| BRINE (Kg/hr) | | | | | | | | | | | | | | | $1.3 \times 10^1$ | | | | $1.2 \times 10^1$ | |
| DRY GROUT (Kg/hr) | | | | | | | | | | | | | | | | | $3.1 \times 10^1$ | | $3.1 \times 10^1$ | |
| STEEL (Kg/hr) | | | | | | | | | | | | | | | | | | $4.0 \times 10^0$ | $4.0 \times 10^0$ | |
| STEEL DRUMS (EA/hr) | | | | | | | | | | | | | | | | | | $2.0 \times 10^{-1}$ | | |
| GROUTED BLOWDOWN (Kg/hr) | | | | | | | | | | | | | | | | | | | $4.3 \times 10^1$ | |
| GROUTED BLOWDOWN IN DRUMS (DRUM) | | | | | | | | | | | | | | | | | | | $4.7 \times 10^1$ | |

**RELEASED FOR RECORD ONLY**

**DO NOT FABRICATE**

| | |
|---|---|
| FOR DRAWING INDEX SEE DRAWING NO. 624961 | SUBCONTRACT NO. N/A |
| NO SCALE | REQUESTER: W.H.LANDMAN<br>DESIGN: S.PRIEBE<br>DRAWN: R.G.Street<br>PROJECT NO. 023203<br>SPCL CODE REC REL |
| DESIGN PHASE: PRE CON | FOR REVIEW/APPROVAL SIGNATURES SEE DAR NO. 104771 |
| SAFETY CATEGORY: N/A | EFFECTIVE DATE: 9-30-2003 |

INEEL — Idaho National Engineering & Environmental Laboratory — BECHTEL BWXT IDAHO, LLC

OU 7-10, PIT 9 REMEDIATION PROJECT
TREATMENT
OPTION 4A
THERMAL DESORPTION, CHEMICAL LEACH & INCINERATION
PROCESS FLOW DIAGRAM

| SIZE | CAGE CODE | INDEX CODE NUMBER (AREA / TYPE / CL / DRG) | DWG- | REV |
|---|---|---|---|---|
| D | 01MF3 | 098 / 9999 / 28 / 090 | 624977 | |

SCALE: NONE — SHEET 4A-PF-6

Date: 09/30/03 – 06:24 A.M. | Layout Name: Sheet 1 | ID: ABE
File: 624977.dwg
Path: T:\REV_D_RR_TREAT

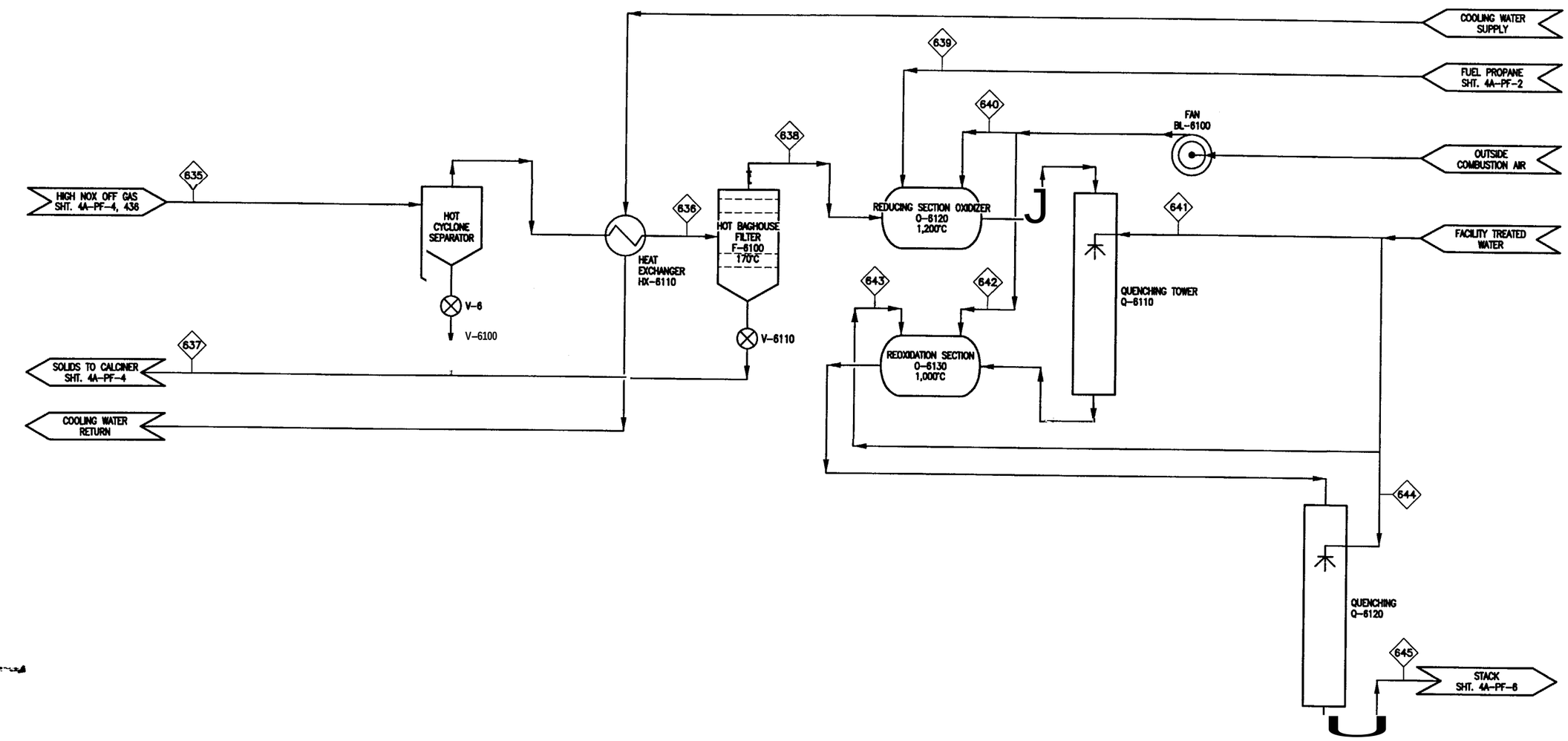


| | 635 | 636 | 637 | 638 | 639 | 640 | 641 | 642 | 643 | 644 | 645 |
|---|---|---|---|---|---|---|---|---|---|---|---|
| | CALCINER OFF GAS | CYCLONE EXHAUST | SOLIDS RETURN TO CALCINER | HOT FILTER EXHAUST | FUEL | REDUCTION COMBUSTION AIR | REDUCTION QUENCH WATER | ReOx COMBUSTION AIR | ReOx QUENCH WATER | QUENCH WATER | STACK EXHAUST |
| TOTAL MASS FLOW (Kg/HR) | $6.9 \times 10^2$ | $6.9 \times 10^2$ | | $6.9 \times 10^2$ | $3.1 \times 10^1$ | $8.5 \times 10^1$ | $2.0 \times 10^2$ | $2.2 \times 10^2$ | $1.8 \times 10^2$ | $2.0 \times 10^2$ | $1.8 \times 10^3$ |
| FRACTION DRY SOLIDS | | | | | | | | | | | $3.8 \times 10^{-6}$ |
| TOTAL SOLIDS FLOW (Kg/HR) | $2.7 \times 10^1$ | $6.8 \times 10^0$ | $2.7 \times 10^1$ | $6.8 \times 10^{-2}$ | | | | | | | $1.4 \times 10^{-1}$ |
| LIQUID FLOW (Kg/HR) | | | | | | | $2.0 \times 10^2$ | | $1.8 \times 10^2$ | | |
| WATER FLOW (Kg/HR) | | | | | | | $2.0 \times 10^2$ | | $1.8 \times 10^2$ | $2.0 \times 10^2$ | $2.1 \times 10^3$ |
| GAS FLOW (Kg/HR) | $6.9 \times 10^2$ | $6.9 \times 10^2$ | | $6.9 \times 10^2$ | | $8.5 \times 10^1$ | | $2.2 \times 10^2$ | | | $1.8 \times 10^3$ |
| GAS FLOW – ACTUAL ($M^3$/MIN) | | | | | | | | | | | $6.0 \times 10^2$ |
| GAS FLOW ($NM^3$/MIN) | $1.0 \times 10^1$ | | | | | | | | | | $3.1 \times 10^2$ |
| GAS FLOW (DSCM/MIN) | | | | | | | | | | | |
| TEMPERATURE (°C) | 315 | 170 | | 490 | | | | | | | 250 |

**RELEASED FOR RECORD ONLY**

**DO NOT FABRICATE**

| | | |
|---|---|---|
| FOR DRAWING INDEX SEE DRAWING NO. 624961 | SUBCONTRACT NO. N/A | INEEL (Idaho National Engineering & Environmental Laboratory) BECHTEL BWXT IDAHO, LLC |
| NO SCALE | REQUESTER: W.H.LANDMAN<br>DESIGN: S.PRIEBE<br>DRAWN: R.G.Street<br>PROJECT NO. 023203<br>SPCL CODE REC REL | OU 7-10, PIT 9 REMEDIATION PROJECT<br>TREATMENT<br>OPTION 4A<br>THERMAL DESORPTION, CHEMICAL LEACH & INCINERATION<br>PROCESS FLOW DIAGRAM |
| DESIGN PHASE: PRE CON<br>SAFETY CATEGORY: N/A | FOR REVIEW/APPROVAL SIGNATURES SEE DAR NO. 104771<br>EFFECTIVE DATE: 9-30-2003 | SIZE D · CAGE CODE 01MF3 · INDEX CODE NUMBER AREA 098 TYPE 9999 CL 28 ORG 090 · DWG-624978 · REV<br>SCALE: NONE · SHEET 4A-PF-7 |

Date: 09/30/03 – 06:23 A.M. | Layout Name: Sheet 1
ID: ABE
File: 624978.dwg
Path: T:\REV_0_RR_TREAT