Appendix D

Tables Showing Derivation of Lists of Wells Recommended for Planned Gyroscopic Logging

Table D-1. Thirty-eight Aquifer wells with existing gyroscope deviation data.

Well ID	Well name	Facility	Status	Minimum depth-to-water (ft)	Maximum depth-to-water (ft)	Magnetic deviation data available?	Other available deviation data types[a]	Drill type[b]	Case type[c]
196	LF2-08	CFA	Active	472	481	no	*.PRN	AR	CS
197	LF2-09	CFA	Active	475	484	YES	*.GYR	AR	CS
198	LF2-10	CFA	Active	475	483	no	*.PRN	AR	CS
199	LF2-11	CFA	Active	466	475	no	*.PRN	AR	CS
207	LF3-08	CFA	Active	482	492	no	*.PRN	AR	CS
469	USGS-020	ICPP	Active	453	465	no	*.PRN	CT	CS
483	USGS-034	ICPP	Active	459	476	no	*.PRN	CT	CS
484	USGS-035	ICPP	Active	463	477	no	*.PRN	CT	CS
485	USGS-036	ICPP	Active	447	477	no	*.PRN	CT	CS
486	USGS-037	ICPP	Active	462	476	no	*.PRN	CT	CS
487	USGS-038	ICPP	Active	463	478	no	*.PRN	CT	CS
488	USGS-039	ICPP	Active	465	479	no	*.PRN	CT	CS
506	USGS-057	ICPP	Active	458	666	no	*.PRN	CT	CS
526	USGS-077	ICPP	Active	457	469	no	*.PRN	CT	CS
531	USGS-082	ICPP	Active	440	454	no	*.PRN	CT	CS
534	USGS-085	ICPP	Active	474	487	no	*.PRN	CT	CS
547	USGS-098	Mid-site	Active	396	417	no	*.GYR	AR	CS
549	USGS-100	ANL	Active	669	680	no	*.GYR	AR	CS
554	USGS-105	South site	Active	658	673	no	*.GYR	AR	CS
560	USGS-111	ICPP	Active	460	570	no	*.PRN	AR	CS
561	USGS-112	ICPP	Active	465	478	YES	*.PRN	Other	CS
562	USGS-113	ICPP	Active	462	479	YES	*.PRN, *.GYR	Other	CS
563	USGS-114	ICPP	Active	459	471	no	*.PRN	Other	CS
564	USGS-115	ICPP	Active	457	469	no	*.PRN	AR	CS
565	USGS-116	ICPP	Active	451	466	YES	*.PRN	AR	CS
567	USGS-118	RWMC	Active	582	587	YES	*.GYR	COR	CS
570	USGS-121	ICPP	Active	447	458	YES	*.GYR	COR	CS
722	LF3-11	CFA	Active	478	490	YES	*.PRN	HAM	SS
724	LF2-12	CFA	Active	476	476	YES	*.PRN	HAM	SS
726	LF3-09	CFA	Active	479	488	YES	*.PRN	HAM	SS
727	LF3-10	CFA	Active	479	490	YES	*.PRN	HAM	SS
732	TRA-08	TRA	Active	474	479	no	*.GYR	AR	CS
763	TRA-06A	TRA	Active	465	471	no	*.GYR	AR	CS
1088	ANL-OBS-A-001	ANL	Active	635	636	YES	*.GYR	COR	UNK
1136	TANT-MON-A-008	TAN-TSF	Active	205	205	YES	*.GYR	HAM	CS
1137	TANT-MON-A-009	TAN-TSF	Active	210	210	YES	*.GYR	HAM	CS
1163	TANT-MON-A-011	TAN-TSF	Active	203	205	YES	*.GYR	HAM	CS
1346	USGS-126b	USGS		413	413	YES	*.GYR	AR	UNK

a. Other deviation data types: *.PRN are photo gyroscope files; *.GYR are digital gyroscope files
b. Drill types: AR air-rotary; COR coring; CT cable-tool; HAM downhole hammer.
c. Casing types: UNK unknown; CS carbon steel; SS stainless steel; PVC polyvinyl chloride.

Table D-2. Eighty-eight **USGS** administrative-controlledaquifer wells.

Well ID	Well name	Facility	Status	Minimum depth-to-water (ft)	Maximum depth-to-water (ft)	Magnetic deviation data available?	Drill type[a]	Case type[b]
147	DH-1B	Mid-site	Active	246	286	no	*AR*	CS
148	DH-2A	Mid-site	Active	252	284	no	*AR*	CS
272	SITE 01 WATER TABLE	Offsite	Not Found	656	986	no	CT	CS
273	SITE-04	South site	Active	395	397	no	CT	CS
274	SITE-06	Mid-site	Active	346	363	no	CT	CS
275	SITE-09	South site	Active	465	476	no	CT	CS
276	SITE-14	Mid-site	Active	256	277	no	CT	CS
277	SITE-16	ANL	Active	631	639	YES	CT	CS
278	SITE-17	Mid-site	Active	381	404	no	CT	CS
279	SITE-19	TRA	Active	460	473	no	CT	CS
449	USBLM 1	Offsite	Not Found	2	43	no	CT	CS
450	USGS-001	South site	Active	582	591	YES	CT	CS
451	USGS-002	South site	Active	651	662	no	CT	CS
453	USGS-004	Mid-site	Active	252	268	no	CT	CS
454	USGS-005	South site	Active	460	472	no	CT	CS
455	USGS-006	Mid-site	Active	406	418	no	CT	CS
456	USGS-007	TAN	Active	204	221	no	CT	CS
457	USGS-008	Offsite	Active	750	770	no	CT	CS
458	USGS-009	South site	Active	594	610	YES	CT	CS
459	USGS-010A	Offsite	Active			no	CT	UNK
460	USGS-011	Offsite	Active	645	655	no	CT	CS
461	USGS-012	Mid-site	Active	308	336	no	CT	CS
462	USGS-013	Offsite	Active	981	989	no	CT	CS
463	USGS-014	Offsite	Active	709	719	no	CT	CS
464	USGS-015	Mid-site	Active	302	334	no	CT	CS
465	USGS-016	Offsite	Active	683	691	no	CT	CS
466	USGS-017	Mid-site	Active	342	360	no	CT	CS
467	USGS-018	Mid-site	Active	258	277	no	CT	CS
468	USGS-019	Mid-site	Active	251	281	no	CT	CS
470	USGS-021	Mid-site	Active	324	338	no	CT	CS
471	USGS-022	South site	Active	510	642	no	CT	CS
472	USGS-023	Mid-site	Active	382	407	no	CT	CS
473	USGS-024	TSF	Active	207	275	no	CT	CS
474	USGS-025	TAN	Active	220	275	no	CT	CS
475	USGS-026	TAN	Active	200	215	no	CT	CS
476	USGS-027	NORTH	Active	218	230	no	CT	CS
477	USGS-028	Mid-site	Active	225	236	no	CT	CS
478	USGS-029	Mid-site	Active	346	360	no	CT	CS
479	USGS-030A	Mid-site	Active	250	263	no	CT	CS
479	USGS-030B	Mid-site	Active	257	274	no	CT	CS

Table D-2. (continued).

Well ID	Well name	Facility	Status	Minimum depth-to-water (ft)	Maximum depth-to-water (ft)	Magnetic deviation data available?	Drill type[a]	Case type[b]
479	USGS-030C	Mid-site	Active	259	276	no	CT	CS
480	USGS-031	Mid-site	Active	250	260	no	CT	CS
481	USGS-032	Mid-site	Active	282	294	no	CT	CS
489	USGS-040	ICPP	Active	446	463	YES	CT	CS
490	USGS-041	ICPP	Active	448	463	YES	CT	CS
491	USGS-042	ICPP	Active	449	464	YES	CT	CS
492	USGS-043	ICPP	Active	447	462	YES	CT	CS
493	USGS-044	ICPP	Active	449	464	YES	CT	CS
494	USGS-045	ICPP	Active	450	466	YES	CT	CS
495	USGS-046	ICPP	Active	448	463	YES	CT	CS
496	USGS-047	ICPP	Active	446	461	YES	CT	CS
497	USGS-048	ICPP	Active	448	464	YES	CT	CS
498	USGS-049	ICPP	Inactive	448	457	YES	CT	CS
500	USGS-051	ICPP	Active	451	464	no	CT	CS
501	USGS-052	ICPP	Active	444	456	YES	CT	CS
507	USGS-058	T U	Active	451	465	no	CT	CS
508	USGS-059	ICPP	Active	447	460	YES	CT	CS
514	USGS-065	T U	Active	459	470	no	CT	CS
516	USGS-067	ICPP	Active	448	461	no	CT	CS
525	USGS-076	T U	Active	465	477	no	CT	CS
528	USGS-079	T U	Active	465	478	no	CT	CS
532	USGS-083	South site	Active	492	502	YES	CT	CS
533	USGS-084	T U	Active	472	485	YES	CT	CS
535	USGS-086	South site	Active	635	653	YES	CT	CS
536	USGS-087	RWMC	Active	575	592	no	CT	CS
537	USGS-088	RWMC	Active	513	594	YES	CT	CS
538	USGS-089	RWMC	Active	580	607	YES	CT	CS
539	USGS-090	RWMC	Active	569	586	no	CT	CS
546	USGS-097	NRF	Active	367	387	no	AR	CS
548	USGS-099	Mid-site	Active	382	401	no	AR	CS
550	USGS-101	South site	Active	763	774	YES	AR	CS
551	USGS-102	NRF	Active	367	378	no	AR	CS
552	USGS-103	South site	Active	574	586	no	AR	CS
553	USGS-104	South site	Active	454	559	YES	AR	CS
555	USGS-106	South site	Active	576	591	YES	AR	CS
556	USGS-107	South site	Active	473	482	no	AR	CS
557	USGS-108	South site	Active	598	611	YES	AR	CS
558	USGS-109	South site	Active	607	623	YES	AR	CS
559	USGS-110a	South site	Active	562	571	YES	AR	CS
566	USGS-117	RWMC	Active	484	598	YES	AR	CS
568	USGS-119	RWMC	Active	600	610	YES	AR	CS
569	USGS-120	RWMC	Active	610	618	YES	AR	CS

Table D-2. (continued).

Well ID	Well name	Facility	Status	Minimum depth-to-water (ft)	Maximum depth-to-water (ft)	Magnetic deviation data available?	Drill type[a]	Case type[b]
571	USGS-122	ICPP	Active	451	461	YES	COR	CS
572	USGS-123	ICPP	Active	457	466	YES	COR	CS
987	USGS-124	Offsite	Active	681	687	YES	AR	CS
988	USGS-125	Offsite	Active	626	631	YES	AR	CS
1345	USGS-126a	USGS	Active	412	412	YES	ARUNK	
1347	USGS-127	USGS	Active	508	509	YES	ARUNK	

a. Drill types: AR air-rotary; COR coring; CT cable-tool; HAM downhole hammer.

b. Casing types: UNK unknown; CS carbon steel; SS stainless steel; PVC polyvinyl chloride.

Table D-3. Forty-five inaccessible aquifer wells.

Well ID	Well name	Facility	Status	Minimum depth-to-water (ft)	Maximum depth-to-water (ft)	Magnetic deviation data available?	Drill type[a]	Case type[b]
1	01S27E14DCC1	Offsite	Not Found	989	1012	no	UNK	UNK
2	04N26E32CBB1	Offsite	Not Found	—	—	no	UNK	UNK
58	ACRE I WELL	ARA	Abandoned	—	—	no	UNK	CS
79	APOLLO WELL	Offsite	Not Found	—	—	no	UNK	UNK
83	ARCHER	Offsite	Not Found	230	246	no	UNK	UNK
84	ARCO TEST	Offsite	Not Found	578	610	no	UNK	UNK
85	ATOMIC CITY	Offsite	Not Found	587	589	no	CT	CS
88	BADGWG FACILITY WELL	South site	Active	—	—	no	AR	CS
91	CCC WELL 3	Offsite	Not Found	—	—	no	CT	CS
92	CERRO GRANDE	Offsite	Not Found	527	558	no	CT	CS
132	CROSS ROADS	Offsite	Inactive; backfilled to 563	582	582	no	UNK	CS
153	EOCR PRODUCTION WELL	South site	Inactive	484	485	no	CT	CS
157	FINGER'S BUTTE BLM	Offsite	Not Found	—	—	no	CT	CS
179	GRAZWG-1	Offsite	Not Found	162	172	no	CT	CS
180	GRAZWG-2	Offsite	Not Found	350	363	no	CT	CS
181	HANSEN	Offsite	Not Found	88	120	no	CT	CS
185	IDAHO FISH AND GAME	Offsite	Not Found	29	65	no	CT	CS
188	LEO ROGER'S 2	Offsite	Not Found	—	—	no	CT	CS
208	LIND & BOTT	Offsite	Not Found	90	129	no	UNK	UNK
230	MINIDOKA WATER SYSTEM	Offsite	Not Found	—	—	no	UNK	UNK
232	MUD-LAKE	Offsite	Not Found	—	—	no	UNK	UNK
237	NO OWN 01	Offsite	Not Found	—	—	no	UNK	UNK
238	NO OWN 24	Offsite	Inactive	13	31	no	Other	CS
243	NRF-S5G	NRF	Inactive			no	AR	CS
244	NRF-S5G TEST WELL	NRF	Backfilled	425	440	no	UNK	UNK
253	PARK BELL	Offsite	Not Found	18	33	no	AR	CS
266	QUAKING ASPEN BUTTE	Offsite	Active	759	766	no	AR	CS
267	RIFLE RANGE WELL	South site	Active	—	—	no	AR	CS
268	RWMC PRODUCTION	RWMC	Active	565	565	YES	CT	CS
269	SIMPLOT 1	Offsite	Not Found	115	127	no	CT	CS
270	SIMPLOT 2	Offsite	Not Found	313	324	no	CT	CS
285	SWEET SAGE	Offsite	Not Found	51	84	no	CT	CS
336	T. SMITH	Offsite	Not Found	334	340	no	UNK	UNK
337	TCH-1	TAN-TSF	Inactive	211	211	no	Other	Other
347	TAN-10	TSF	Active (Damaged)		—	no	AR	CS
596	WEAVER AND LOWE	Offsite	Not Found	790	837	no	CT	CS

Table D-3. (continued).

Well ID	Well name	Facility	Status	Minimum depth-to-water (ft)	Maximum depth-to-water (ft)	Magnetic deviation data available?	Drill type[a]	Case type[b]
597	WHEATGRASS DEPT. WATER	Offsite	Active	—	—	no	AR	CS
826	NRF-6P	NRF	Active	—	—	no	UNK	PVC
827	NRF-6	NRF	Active	363	374	no	UNK	CS
828	NRF-7	NRF	Active	360	371	no	UNK	CS
839	C1	RWMC	Abandoned	—	—	YES	COR	UNK
869	NRF-4	NRF	Active	—	—	no	UNK	CS
876	NPR-W-01	NPR	Inactive	460.952	460.9524	no	COR	UNK
877	NPR-W-02	NPR	Inactive	283	286	no	COR	UNK
1002	STF-PIE-A-002	STF	Abandoned	495	495	YES	COR	CS

a. Drill types: AR air-rotary; COR coring; CT cable-tool; HAM downhole hammer.

b. Casing types: UNK unknown; CS carbon steel; SS stainless steel; PVC polyvinyl chloride.

Table D-4. Fifty cable-tool constructed wells.

Well ID	Well name	Facility	Status	Minimum depth-to-water (ft)	Maximum depth-to-water (ft)	Magnetic deviation data available?	Drill type[a]	Case type[b]
69	ANP-01	TSF	Active	202	220	no	CT	CS
70	ANP-02	TSF	Active	207	221	no	CT	CS
71	ANP-03	TSF	Active	182	201	no	CT	CS
72	ANP-04	IET	Active	202	215	no	CT	CS
73	ANP-05	TAN	Active	284	296	no	CT	CS
74	ANP-06	TAN	Active	206	221	no	CT	CS
75	ANP-07	TAN	Active	345	357	no	CT	CS
76	ANP-08	WRRTF	Active	—	—	no	CT	CS
77	ANP-09	TAN	Active	214	228	no	CT	CS
78	ANP-10	TAN	Active	216	224	no	CT	CS
80	ARA-1	ARA	Inactive	603	608	YES	CT	CS
81	ARA-3	ARA	Inactive	592	593	YES	CT	CS
82	ARBOR TEST	ANL	Active	672	683	no	CT	CS
93	CFA-1	CFA	Active	467	480	YES	CT	CS
94	CFA-2	CFA	Active	469	521	no	CT	CS
98	CPP-01	ICPP/INTEC	Active	443	456	YES	CT	CS
99	CPP-02	ICPP/INTEC	Active	444	456	no	CT	CS
149	EBR-1	EBR	Active	576	596	no	CT	CS
150	EBR-II #1	ANL	Active	632	633	no	CT	CS
151	EBR-II #2	ANL	Active	—	—	no	CT	CS
154	FET-1	CTF	Active	199	202	no	CT	CS
155	FET-2	CTF	Active	200	202	no	CT	CS
156	FET-3	CTF	Active	194	206	no	CT	CS
158	FIRE STATION WELL	WAG 10	Active	416	421	no	CT	CS
159	GIN-01	WRRTF	Active	207	214	no	CT	CS
160	GIN-02	WRRTF	Active	201	212	no	CT	CS
161	GIN-03	WRRTF	Active	206	213	no	CT	CS
162	GIN-04	WRRTF	Active	206	213	no	CT	CS
182	HIGHWAY 1(A),1(B),1(C)	Offsite	Not Found	573	587	no	CT	CS
183	HIGHWAY 2	Offsite	Active	716	728	no	CT	CS
184	HIGHWAY 3	South site	Active	537	539	no	CT	CS
187	LEO ROGER'S 1	Offsite	Active	—	—	no	CT	CS
231	MTR TEST	TRA	Active	447	468	YES	CT	CS
236	NO NAME 01	TAN	Active	198	213	no	CT	CS
240	NRF-1	NRF	Active	359	366	no	CT	CS
241	NRF-2	NRF	Active	359	367	no	CT	CS
242	NRF-3	NRF	Active	361	372	no	CT	CS
245	NTP-AREA 2	ARA	Active	664	673	no	CT	CS
246	OMRE	South site	Inactive	480	498	no	CT	CS

Table D-4. (continued).

Well ID	Well name	Facility	Status	Minimum depth-to-water (ft)	Maximum depth-to-water (ft)	Magnetic deviation data available?	Drill type[a]	Case type[b]
247	OWSLEY WELL 2	TAN	Active	216	227	no	CT	CS
248	P&W-1	TAN	Active	307	319	no	CT	CS
249	P&W-2	TAN	Active	303	317	no	CT	CS
250	P&W-3	TAN	Active	297	309	no	CT	CS
256	PSTF TEST	TAN	Active	200	215	no	CT	CS
280	SPERT-1	PBF	Active	455	471	no	CT	CS
281	SPERT-2	PBF	Active	463	463	no	CT	CS
356	TRA-01	TRA	Active	450	460	no	CT	CS
357	TRA-02	TRA	Inactive	452	482	no	CT	CS
358	TRA-03	TRA	Active	452	457	no	CT	CS
359	TRA-04	TRA	Active	—	—	no	CT	CS

a. Drill types: AR air-rotary; COR coring; CT cable-tool; HAM downhole hammer.

b. Casing types: UNK unknown; CS carbon steel; SS stainless steel; PVC polyvinyl chloride.

Table D-5A. Nineteen priority aquifer wells for planned gyroscopic logging that have no magnetic deviation data.

Well ID	Well name	Facility	Status	Minimum depth-to-water (ft)	Maximum depth-to-water (ft)	Magnetic deviation data available?	Drill type[a]	Case type[b]
1340	TANT-MON-A-054	TAN	Active	—	—	no	HAM	CS
1341	TANT-MON-A-055	TAN	Active	—	—	no	HAM	CS
1342	TANT-MON-A-056	TAN	Active	—	—	no	HAM	CS
1343	TANT-MON-A-057	TAN	Active	—	—	no	HAM	CS
1344	TANT-MON-A-058	TAN	Active	—	—	no	HAM	CS
97	COREHOLE 2A	Mid-site	Active	204	214	no	COR	CS
719	ANL-M11	ANL	Active	631	635	no	AR	CS
1143	ANL-MON-A-014	ANL	Active	636	637	no	HAM	SS
186	INEL-1	Mid-site	Active	304	309	no	AR	CS
239	NPR TEST	South site	Active	455	468	no	AR	CS
101	CPP-04	ICPP	Active	—	—	no	UNK	CS
163	GIN-05	WRRTF	Active	206	213	no	Other	CS
360	TRA DISPOSAL	TRA	Active	433	469	no	CT	CS
731	TRA-07	TRA	Active	469	476	no	AR	SS
595	WATER SUPPLY DEL 1	Mid-site	Active	384	402	no	AR	CS
1351	ICPP-MON-A-165	WTEC	Active	—	—	no	HAM	CS
1352	ICPP-MON-A-166	WTEC	Active	—	—	no	HAM	CS
1383	ICPP-MON-A-167	WTEC	Active	—	—	no	HAM	CS
1186	ICPP-POT-A-012	ICPP	Active	445	445	YES but poor quality files	UNK	UNK

a. Drill types: AR air-rotary; COR coring; CT cable-tool; HAM downhole hammer

b. Casing types: UNK unknown; CS carbon steel; SS stainless steel; PVC polyvinyl chloride.

Table D-5B. Twenty-five aquifer wells without existing magnetic deviation data that are not priority wells for planned gyroscopic logging.

Well ID	Well name	Facility	Status	Minimum depth-to-water (ft)	Maximum depth-to-water (ft)	Magnetic deviation data available?	Drill type[a]	Case type[b]
338	TAN DRAINAGE DISP. 01	TSF	Active	—	—	no	UNK	CS
339	TAN DRAINAGE DISP. 02	TSF	Active	—	—	no	UNK	CS
340	TAN DRAINAGE DISP. 03	CTF	Active	—	—	no	UNK	CS
342	TAN-03	TSF	Active	—	—	no	AR	CS
343	TAN-04	TSF	Active	222	225	no	AR	CS
344	TAN-05	TSF	Active	222	225	no	AR	CS
345	TAN-08	TSF	Active	213	218	no	AR	CS
346	TAN-09	TSF	Active	201	204	no	AR	CS
348	TAN-10A	TSF	Active	201	204	no	AR	CS
349	TAN-11	TSF	Active	200	204	no	AR	CS
728	TAN-17	TAN	Active	213	213	no	AR	Other
729	TCH-2	TAN	Active	214	214	no	AR	CS
746	TAN-06	TAN	Active	208	211	no	AR	SS
747	TAN-07	TSF	Active	208	211	no	AR	SS
748	TAN-12	TSF	Active	201	204	no	AR	SS
749	TAN-13A	TSF	Active	202	206	no	AR	SS
750	TAN-14	TSF	Active	203	206	no	AR	SS
751	TAN-15	TAN	Active	208	211	no	AR	SS
752	TAN-16	TSF	Active	208	211	no	AR	SS
1212	SOUTH-MON-A-001	RWMC	Active	560	563	no	HAM	SS
1213	SOUTH-MON-A-002	RWMC	Active	530	533	no	HAM	SS
1214	SOUTH-MON-A-003	RWMC	Active	595	598	no	HAM	SS
1215	SOUTH-MON-A-004	RWMC	Active	598	602	no	HAM	SS
1219	TANT-WJ-A-003	TAN-TSF	Active	204	204	no	AR	CS
1327	RWMC-MON-A-M17S	RWMC	Active	—	—	no	HAM	SS

a. Drill types: AR air-rotary; COR coring; CT cable-tool; HAM downhole hammer

b. Casing types: UNK unknown; CS carbon steel; SS stainless steel; PVC polyvinyl chloride

Table **D-6A.** Twenty-five aquifer wells with existing magnetic deviation data that fail quantitative screening levels.

Well ID	Well name	Facility	Status	Minimum depth-to-water (ft)	Maximum depth-to-water (ft)	Correction factor at max depth-to-water and average inclination (plus 0.5 deg) (ft)	Drill type”	Case type”
767	M4D	RWMC	Active	587	599	0.50	HAM	SS
1003	ARA-MON-A-001	ARA	Active	585	596	0.42	HAM	SS
765	M1SA	RWMC	Active	580	596	0.24	HAM	SS
96	COREHOLE 1	South site	Active	929	938	0.24	COR	UNK
906	RWMC-MON-A-013	RWMC	—	636	641	0.24	AR	CS
769	M7S	RWMC	Active	572	580	0.23	HAM	SS
797	TAN-23A	TSF	Active	209	211	0.22	AR	SS
766	M3S	RWMC	Active	584	592	0.21	HAM	SS
1305	STF-MON-A-003	STF/OMRE	Active	495	499	0.20	HAM	SS
790	TAN-18	TSF	Active	224	226	0.20	AR	CS
1306	STF-MON-A-004	STF/OMRE	Active	503	506	0.19	HAM	SS
968	ANL-MON-A-012	ANL	Active	645	648	0.19	AR	UNK
1092	ICPP-MON-A-022	ICPP	Active	444	453	0.17	RC	SS
1076	ARA-COR-A-005	ARA	Active	593	597	0.17	COR	CS
1080	NRF-MON-A-009	NRF	Active	370	381	0.17	HAM	CS
1095	PBF-MON-A-005	PBF	—	506	512	0.16	HAM	SS
1008	TANT-MON-A-028	TAN-TSF	Active	201	207	0.15	AR	SS
1132	RWMC-MON-A-066	RWMC	—	601	601	0.15	AR	CS
1101	TANT-MON-A-005	TAN-TSF	Active	200	207	0.14	RC	SS
1006	ARA-MON-A-03A	ARA	Active	600	608	0.12	HAM	SS
1314	TANT-MON-A-047	TAN	Active	215	215	0.11	RC	CS
1004	ARA-MON-A-002	ARA	Active	588	594	0.11	HAM	SS
1117	TANT-MON-A-024	TAN-TSF	Active	203	203	0.10	RC	SS
1087	PBF-MON-A-003	PBF	Active	482	521	0.10	HAM	SS
1007	ARA-MON-A-004	ARA	Active	615	617	0.10	HAM	SS

a. Drill types: AR air-rotary; COR coring; CT cable-tool; HAM downhole hammer

b. Casing types: UNK unknown; CS carbon steel; SS stainless steel; PVC polyvinyl chloride.

Table D-6B. Forty-seven aquifer wells with existing magnetic deviation data that do not fail any quantitative screening criteria.

Well ID	Well name	Facility	Status	Minimum depth-to-water (ft)	Maximum depth-to-water (ft)	Correction factor at max depth-to-water and average inclination (plus 0.5 deg) (ft)	Drill type”	Case type[b]
768	M6S	RWMC	Active	637	642	0.08	HAM	SS
770	M10S	RWMC	Active	591	598	0.09	HAM	SS
791	TAN-19	TSF	Active	224	227	0.05	AR	SS
792	TAN-20	TSF	Active	202	206	0.02	AR	SS
793	TAN-21	TSF	Active	209	213	0.06	AR	SS
795	TAN-22A	TSF	Active	208	211	0.03	AR	SS
799	TAN-24A	WRRTF	Active	211	214	0.04	AR	SS
840	C1A	RWMC	Not Found	—	—	0.09	COR	CS
998	STF-MON-A-01A	STF	Active	498	501	0.09	HAM	SS
999	STF-MON-A-02A	STF	Active	494	498	0.08	HAM	CS
1009	TANT-MON-A-027	TAN-TSF	Active	201	205	0.06	AR	SS
1010	TANT-MON-A-029	TAN-TSF	Active	207	207	0.05	RC	SS
1012	TANT-MON-A-030A	TAN-TSF	Active	201	205	0.05	AR	SS
1013	TANW-MON-A-MW2	TAN-WRRTF	Active	215	215	0.04	AR	SS
1077	CFA-MON-A-001	CFA	—	486	492	0.05	HAM	SS
1078	CFA-MON-A-002	CFA	Active	482	488	0.07	HAM	SS
1079	NRF-MON-A-008	NRF	Active	369	380	0.07	HAM	CS
1081	NRF-MON-A-010	NRF	Active	370	380	0.06	HAM	CS
1082	NRF-MON-A-011	NRF	Active	367	378	0.05	HAM	CS
1083	NRF-MON-A-012	NRF	Active	368	378	0.08	HAM	CS
1084	NRF-MON-A-013	NRF	Active	359	368	0.04	HAM	CS
1085	PBF-MON-A-001	PBF	Active	441	448	0.07	HAM	SS
1089	CFA-MON-A-003	CFA	—	482	487	0.04	AR	SS
1091	ICPP-MON-A-021	ICPP	Active	434	443	0.08	RC	SS
1094	PBF-MON-A-004	PBF	Active	482	493	0.04	AR	SS
1100	TANT-MON-A-004	TAN-TSF	Active	202	206	0.04	RC	SS
1118	TANT-MON-A-025	TAN-TSF	Active	203	203	0.04	RC	SS
1131	RWMC-MON-A-065	RWMC	—	—	—	0.10	AR	CS
1134	TANT-MON-A-006	TAN-TSF	Active	206	209	0.03	RC	CS
1135	TANT-MON-A-007	TAN-TSF	Active	218	221	0.04	RC	CS
1138	TANT-MON-A-010	TAN-TSF	Active	214	217	0.04	HAM	CS
1164	TANT-MON-A-012	TAN-TSF	Active	221	221	0.03	RC	CS
1165	TANT-MON-A-013	TAN-TSF	Active	223	223	0.03	RC	CS
1166	TANT-MON-A-014	TAN-TSF	Active	207	207	0.04	RC	CS
1167	TANT-MON-A-015	TAN-TSF	Active	205	207	0.02	RC	CS
1168	TANT-MON-A-016	TAN-TSF	Active	221	224	0.02	RC	CS

Table D-6B. (continued).

Well ID	Well name	Facility	Status	Minimum depth-to-water (ft)	Maximum depth-to-water (ft)	Correction factor at max depth-to-water and average inclination (plus 0.5 deg) (ft)	Drill type[a]	Case type[b]
1169	TANT-MON-A-017	TAN-TSF	Active	220	223	0.02	RC	CS
1170	TANT-MON-A-018	TAN-TSF	Active	219	222	0.03	RC	CS
1171	TANT-MON-A-019	TAN-TSF	Active	216	219	0.03	RC	CS
1172	TANT-MON-A-020	TAN-TSF	Active	215	218	0.02	RC	CS
1211	TANT-MON-A-048	TAN	Active	213	213	0.04	RC	CS
1315	TANT-MON-A-050	TAN	Active	214	214	0.02	RC	CS
1316	TANT-MON-A-051	TAN	Active	213	213	0.02	RC	CS
1317	TANT-MON-A-052	TAN	Active	213	213	0.03	RC	CS
1337	SOUTH-MON-A-010	RWMC	Active	613	613	0.00	HAM	SS
1338	SOUTH-MON-A-009	RWMC	Active	588	588	0.00	HAM	SS
1350	ICPP-MON-A-164C	WTEC	Active	—	—	0.00	HAM	CS

a. Drill types: AR air-rotary; COR coring; CT cable-tool; HAM downhole hammer.

b. Casing types: UNK unknown; CS carbon steel; SS stainless steel; PVC polyvinyl chloride.

Appendix E

Long-Term Stewardship Annual Status Report-2001 Sitewide Digital Gyroscopic and Magnetic Logging of Wells and Boreholes

Appendix E

Long-Term Stewardship Annual Status Report-2001 Sitewide Digital Gyroscopic and Magnetic Logging of Wells and Boreholes

This study is part of an effort to create a larger database of digital gyroscopic borehole deviation data for INEEL aquifer wells. As of 2001, only 38 of more than 340 aquifer wells located at or near the INEEL have been logged with either photo or digital gyroscope tools. Long-Term Stewardship (LTS) incorporated the borehole deviation study into the Well Services-Well Maintenance Program to advance better management practices for increasing the gyroscopic database. As an annually planned scope, the gyroscopic database will be continually updated and expanded through revisions of this document.

Following preparation for the main portion of this report, six aquifer wells were logged using the digital gyroscope (9095 tool). The logged well files were obtained and processed as part of the FY-01 Well Maintenance scope of work. Century Geophysical Corporation software (Log v.3.43, Display v.3.64), which includes a proprietary algorithm to calculate true depths from borehole deviation logging data, was used to process the files.

In addition, four new magnetic deviation files also were processed and incorporated. These are from wells also logged in FY-01 following preparation of the main portion of this report. Note that ICPP-MON-A-164C is replicated here with an updated 9055 magnetic deviation file.

The following tables include true and cable depths and plan view plots showing the down hole trace relative to plumb. From these, correction factors were determined for the expected range of depth-to-water at each well.

The correction factors obtained from the Century Geophysical software processing of deviation data collected in FY-01 with the magnetic deviation tool (9055 neutron tool) are shown in Table E-1. Results from analysis of the new FY-01 9095 digital gyroscopic files are presented in Table E-2.

Table E-1. Results of FY-01 9055 magnetic deviation logging files.

Well-ID	Well Name	Alias	Facility	Status	Drilling Method	Casing Summary	Minimum depth-to-water (ft)	Maximum depth-to-water (ft)	Average inclination angle (degrees)	Correction factor at max depth-to-water and average inclination (plus 0.5 deg) ft
1350	ICPP-MON-A-164C	INTEC PERC 1	INTEC	Active	Reverse Circulation, Hammer	CS to 247 ft; SS to 527 ft	—	498	0.47	0.07
1351	ICPP-MON-A-165	INTEC PERC 2	INTEC	Active	Reverse Circulation, Hammer	CS to 210 ft; SS to 525 ft	489	496.3	0.53	0.08
1352	ICPP-MON-A-166	INTEC PERC 3	INTEC	Active	Reverse Circulation, Hammer	SS to 527	490	502	0.63	0.10
1383	ICPP-MON-A-167	INTEC PERC 4	INTEC	Active	Reverse Circulation, Hammer	CS to 218 ft; SS to 502 ft	455	493.7	0.67	0.10

Table E-2. Results across the water table of FY-01 9095 digital gyroscope logging files.

Well-ID	Well Name	Alias	Facility	Status	Drilling Method	Casing Summary	Cable depth (ft)	True depth (ft)	Correction factor (ft)
97	COREHOLE 2A	CH-2A	Mid-site	Active	Corehole	CS to 1963 ft	204.80	204.74	0.06
							205.80	205.74	0.06
							206.80	206.74	0.06
							207.80	207.74	0.06
							208.80	208.74	0.06
							209.80	209.74	0.06
							210.80	210.74	0.06
							211.80	211.74	0.06
							212.80	212.74	0.06
							213.80	213.74	0.06
							214.80	214.74	0.06
766	RWMC-M3S	M3S	RWMC	Active	Reverse Circulation Hammer	SS to 603 ft	584.50	584.31	0.19
							585.50	585.31	0.19
							586.50	586.31	0.19
							587.50	587.31	0.19
							588.50	588.31	0.19
							589.50	589.31	0.19
							590.50	590.31	0.19
							591.50	591.31	0.19
767	RWMC-M4D	M4D	RWMC	Active	Reverse Circulation Hammer	SS to 798 ft	587.50	587.03	0.47
							588.50	588.03	0.47
							589.50	589.03	0.47
							590.50	590.03	0.47
							591.50	591.02	0.48
							592.50	592.02	0.48
							593.50	593.02	0.48
							594.50	594.02	0.48
							595.50	595.02	0.48
							596.50	596.02	0.48
							597.50	597.02	0.48
							598.50	598.02	0.48

Table E-2. (continued)

Well-ID	Well Name	Alias	Facility	Status	Drilling Method	Casing Summary	Cable depth (ft)	True depth (ft)	Correction factor (ft)
769	RWMC-M7S	M7S	RWMC	Active	Reverse Circulation Hammer	SS to 598 ft	572.30	572.07	0.23
							573.30	573.06	0.24
							574.30	574.06	0.24
							575.30	575.06	0.24
							576.30	576.06	0.24
							577.30	577.06	0.24
							578.30	578.06	0.24
							579.30	579.06	0.24

SS - stainless steel, **CS** - carbon steel

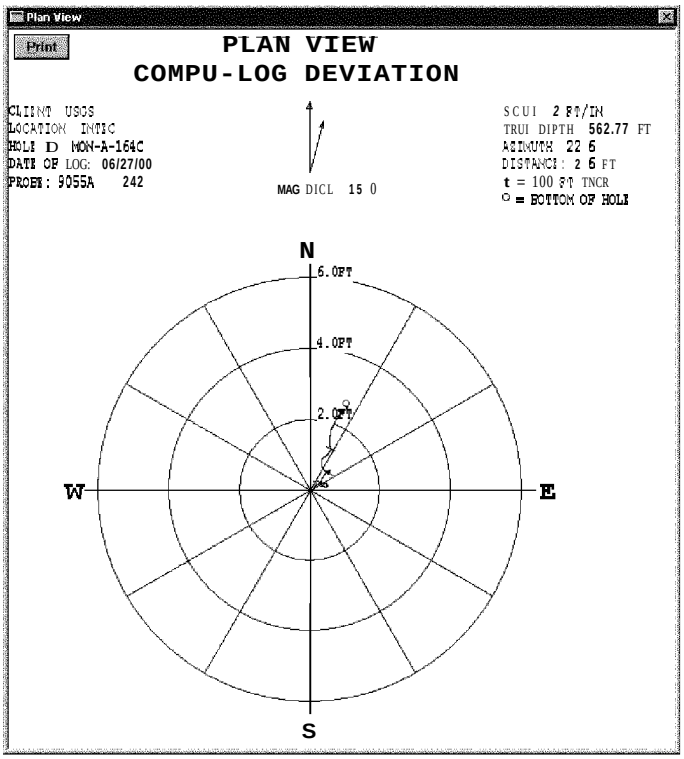

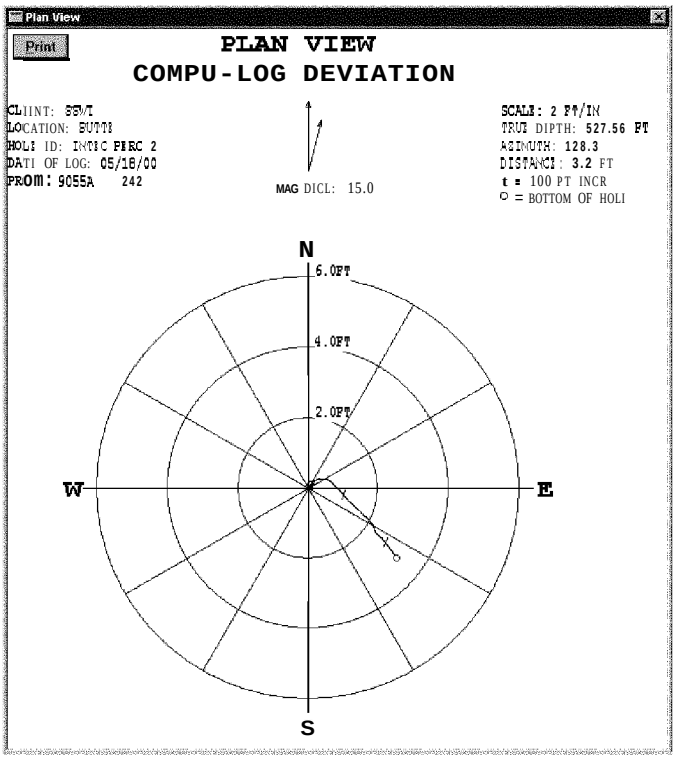

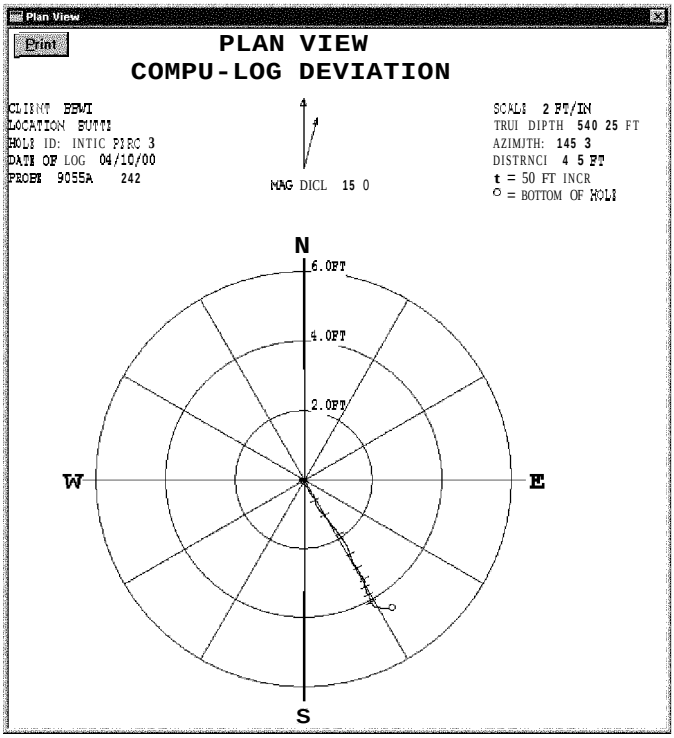

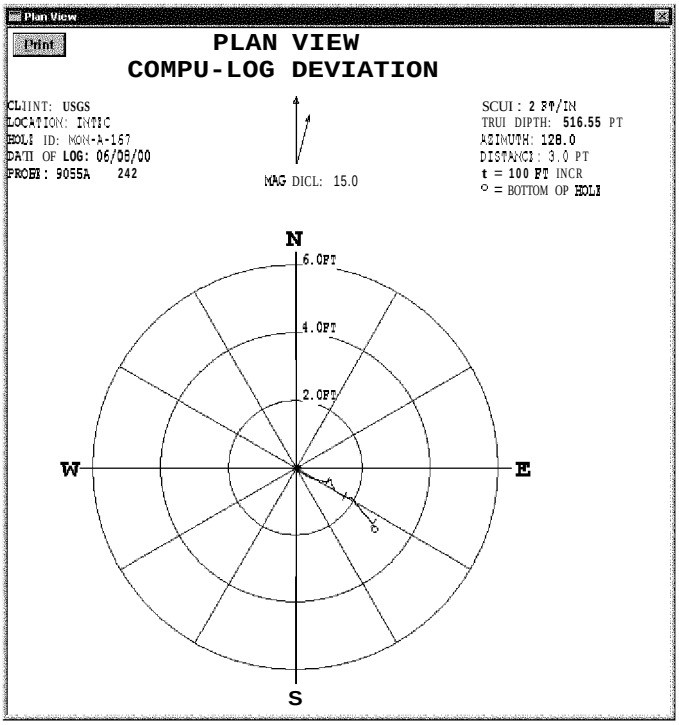

Figure E-1. Compu-log Plan View Diagrams of Borehole Deviation for Wells with Magnetic Deviation Data.

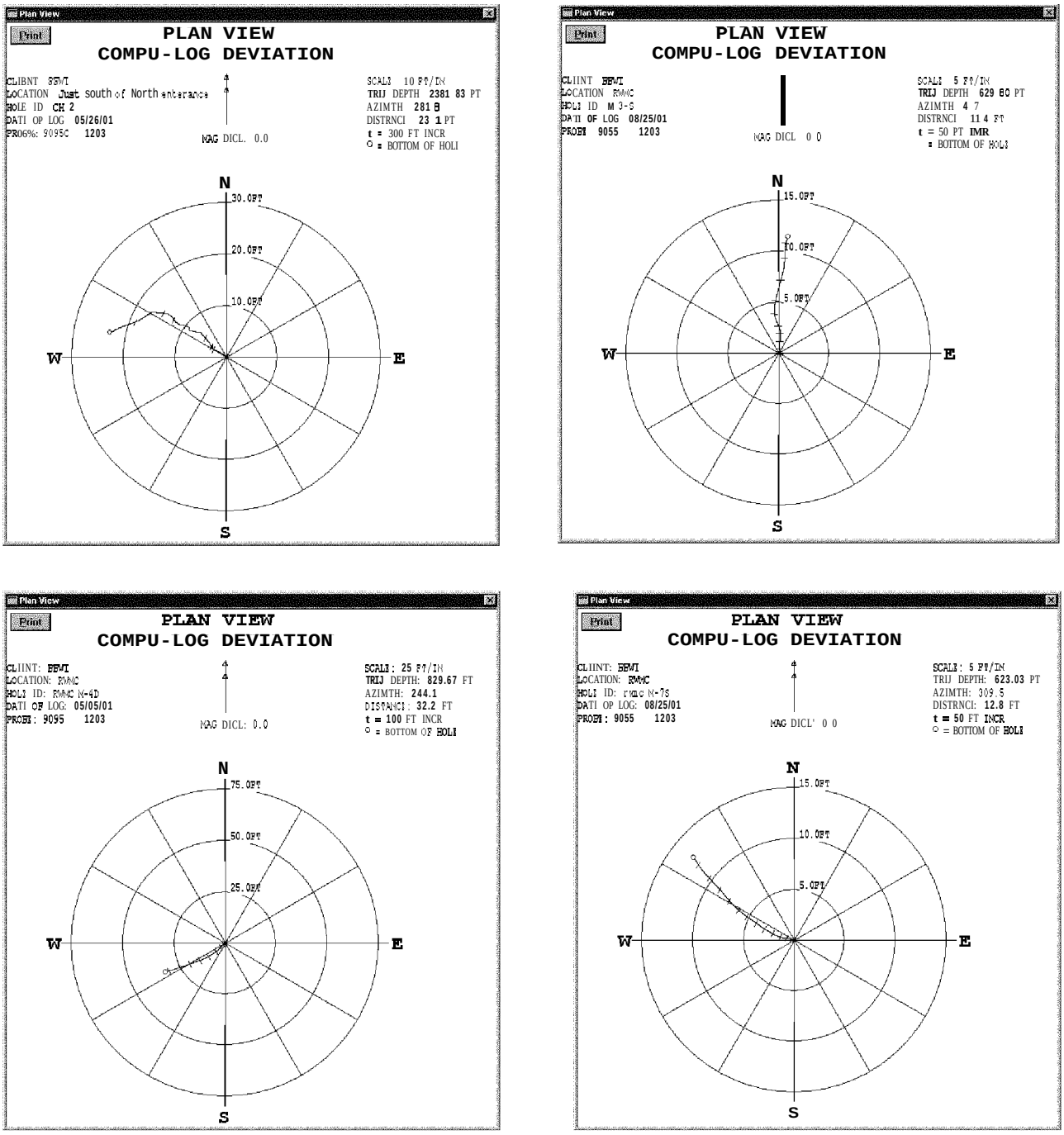

Figure E-2. Compu-log Plan View Diagrams of Borehole Deviation for Wells with Gyroscope Deviation Data.

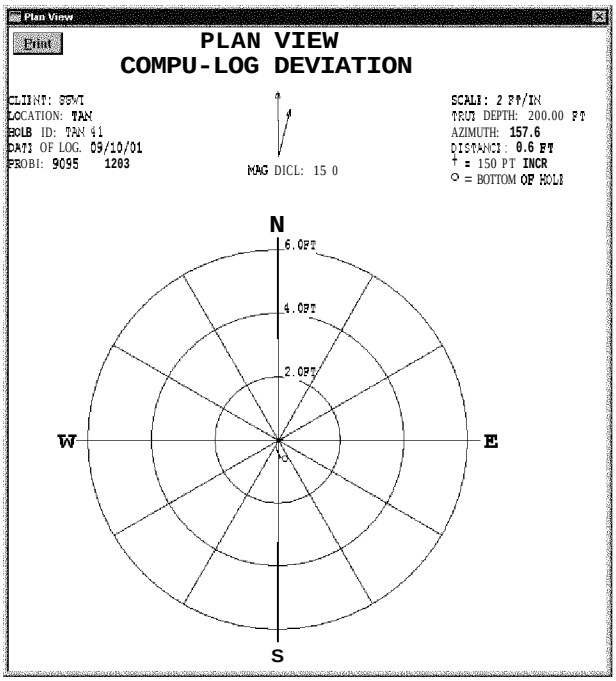

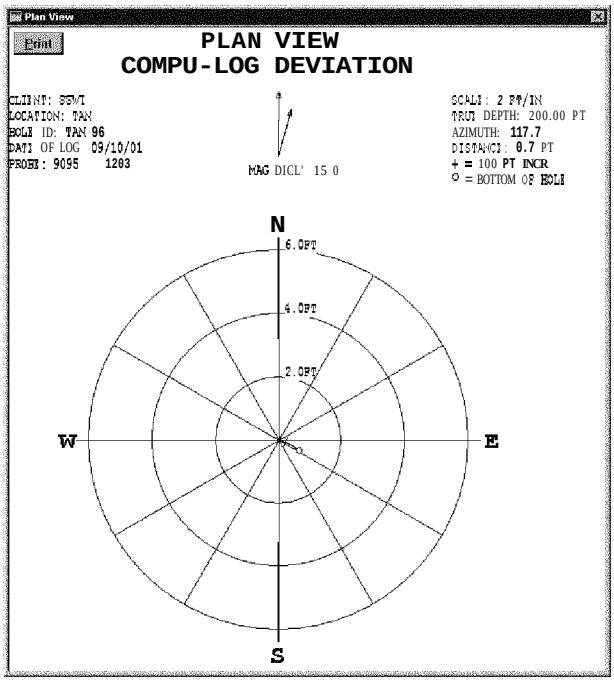

Figure E-2. (Continued).

Appendix F

Long-Term Stewardship Idaho Completion Project (ICP) Annual Status Report 2003 Sitewide Digital Gyroscopic Logging of Wells and Boreholes

Appendix F

Long-Term Stewardship Idaho Completion Project (ICP) Annual Status Report 2003 Sitewide Digital Gyroscopic Logging of Wells and Boreholes

This study is part of an ongoing effort to create a larger database of digital gyroscopic borehole deviation data for INEEL aquifer wells. In FY-02, 15 aquifer wells were logged with the Century 9095 digital gyroscopic borehole deviation tool. In FY-03, 26 aquifer wells were logged with this same tool. Of these, two logs, for wells M15S (well ID 1338) and TRA-08 (well ID 732), proved unusable; the result is 39 new, usable gyroscopic borehole deviation logs for INEEL aquifer wells.

Long-Term Stewardship (LTS) and the Idaho Completion Project (ICP) incorporated the borehole deviation study into the Well Services-Well Maintenance Program in 2001 to advance better management practices for increasing the gyroscopic database to more accurately assess water table elevation information at the INEEL. As an annually planned scope, the gyroscopic database will be continually updated and expanded through revisions of this document.

Following the guideline set forth in the preparation for the main portion of this report (INEEL/EXT-02-00248), the logged well files for 2002 and 2003 were processed as part of the FY-03 Well Maintenance scope of work using Century Geophysical Corporation software (Log v.3.43, Display v.3.64)™, which includes a proprietary algorithm to calculate true depths from borehole deviation logging data. This software was used to process the files for inclusion in Appendix F.

In addition, Table 1 from INEEL/EXT-02-00248, Revision 0, has been updated to remove errors discovered since the report was first released. In Appendix F, another deviation methods comparison table, Table F-1, is presented showing updates that were collected in FY-02 and FY-03. Location maps (Figures 4, 5, and 6) from the main report also were updated according to more recent doctrine for external release reporting. A new location map, Figure F-1, presents the location of all wells with known acceptable magnetic deviation logs (i.e., deviation less than established criteria), photo gyroscopic logs, and digital gyroscopic logs, including logs from FY-02 and FY-03.

Table F-2 lists the correction factors obtained from the Century Geophysical software processing of deviation data collected in FY-02 and FY-03 for historical minimum and maximum water table depths. The table includes true and cable depths from which correction factors were determined for the expected range of depth-to-water at each well.

Figure F-2 shows the Compu-Log plan view deviation plots showing the down hole trace relative to plumb for each well logged in FY-02 and FY-03 with the Century 9095 digital gyroscopic logging tool.

Table F-1. Comparison of correction factors developed from data collected with different logging devices including logs from FY-02 and FY-03.

Well Name	Well-ID	Compare at depth (ft bls)	9055 Data Processed With Century Software Algorithm (ft)	9095 Digital Gyroscope (ft)	StrataData Photo Gyroscope (ft)
ANL-OBS-A-001	1088	637	0.04	0.04	—
ARA-MON-A-001	1003	592	0.38	0.47	—
ARA-MON-A-002	1004	594	0.04	0.10	—
ARA-MON-A-004	1007	622	0.03	0.08	—
ARA-MON-A-03A	1006	608	0.04	0.12	—
CFA-MON-A-001	1077	491	0.04	0.04	—
CFA-MON-A-002	1078	487	0.01	0.05	—
CFA-MON-A-003	1089	487	0.02	0.03	—
LF2-08	196	482.3	—	2.98	2.85
LF2-09	197	485	4.75	5.43	5.38
LF2-10	198	483	—	0.74	0.68
LF2-11	199	477	—	0.09	0.10
LF2-12	724	475	0.09	—	0.09
LF3-08	207	493	—	5.04	4.24
LF3-09	726	490	0.11	—	0.12
LF3-10	727	491	0.02	0.06	0.01
LF3-11	722	480	0.03	—	0.03
M1SA	765	596	0.14	0.19	—
M3S	766	590	0.14	0.19	—
M4D	767	599	0.37	0.48	—
M7S	769	579	0.12	0.19	—
o w 2	966	620	0.06	0.04	—
PBF-MON-A-003	1087	520	0.04	0.06	—
PBF-MON-A-004	1094	498	0.00	0.06	—
TAN-34	1136	210	0.08	0.57	—
TAN-35	1137	210	0.04	0.03	—
TAN-37	1163	210	0.00	0.00	—
TAN-41	1167	200	0.00	0.00	—
TAN-46	1172	200	0.00	0.00	—

Table F-1. (continued)

Well Name	Well-ID	Compare at depth (ft bls)	9055 Data Processed With Century Software Algorithm (ft)	9095 Digital Gyroscope (ft)	StrataData Photo Gyroscope (ft)
USGS-020	469	480	—	0.08	0.05
USGS-111	560	474	—	6.03	4.70
USGS-112	561	480	0.58	2.76	2.37
USGS-113	562	480	4.86	5.78	5.67
USGS-114	563	475	—	4.76	4.32
USGS-115	564	450	—	1.74	1.60
USGS-116	565	465	0.16	—	0.18
USGS-118	567	555	0.15	0.17	—
USGS-121	570	456	1.51	1.73	—
USGS-126B	1346	400	0.46	0.42	—

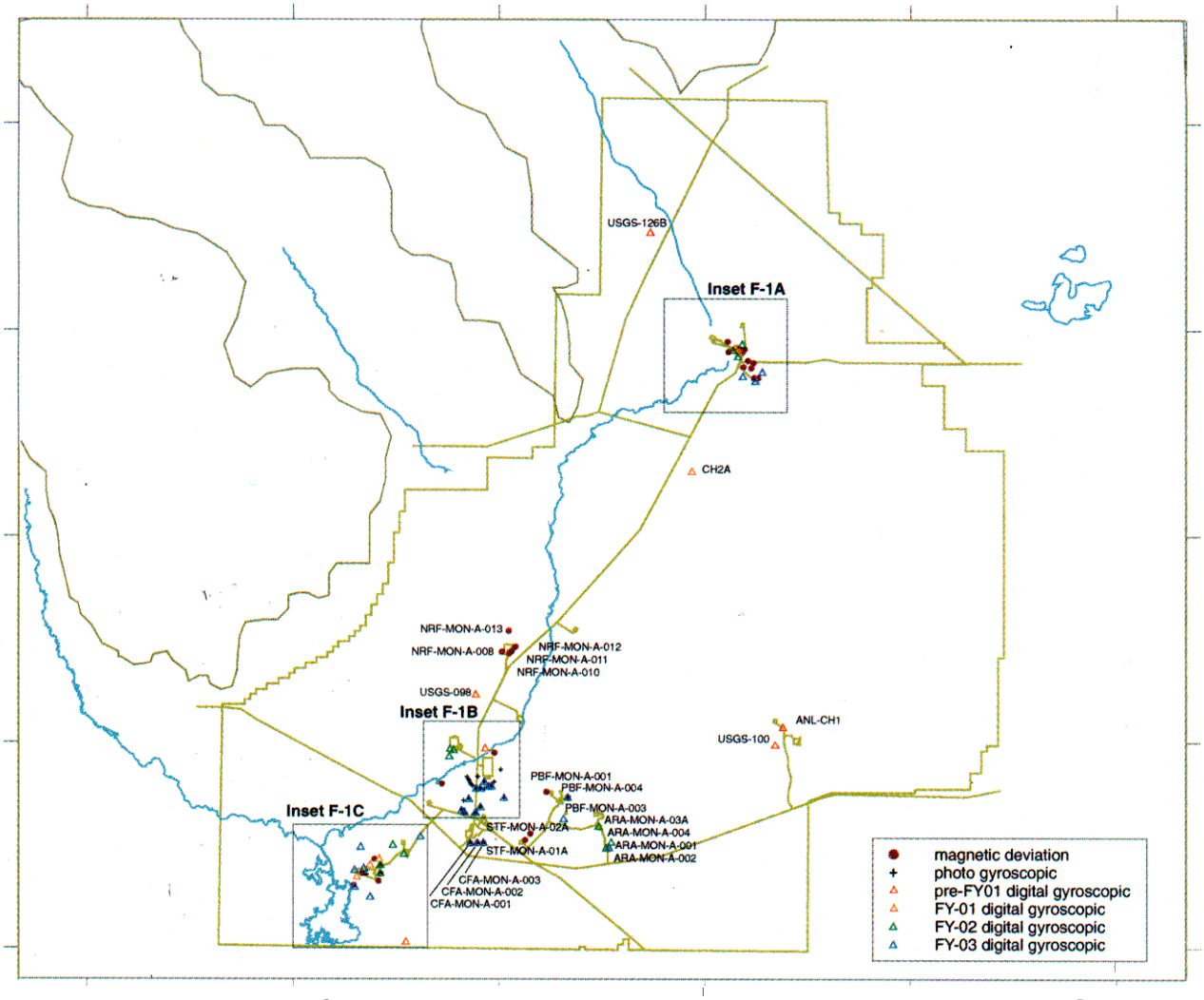

Figure F-1. Location map of wells and boreholes with digital gyroscopic, photo gyroscopic, and magnetic deviation logs (note: magnetic deviation logs are shown for wells with less than 0.1-ft deviation at the water table).

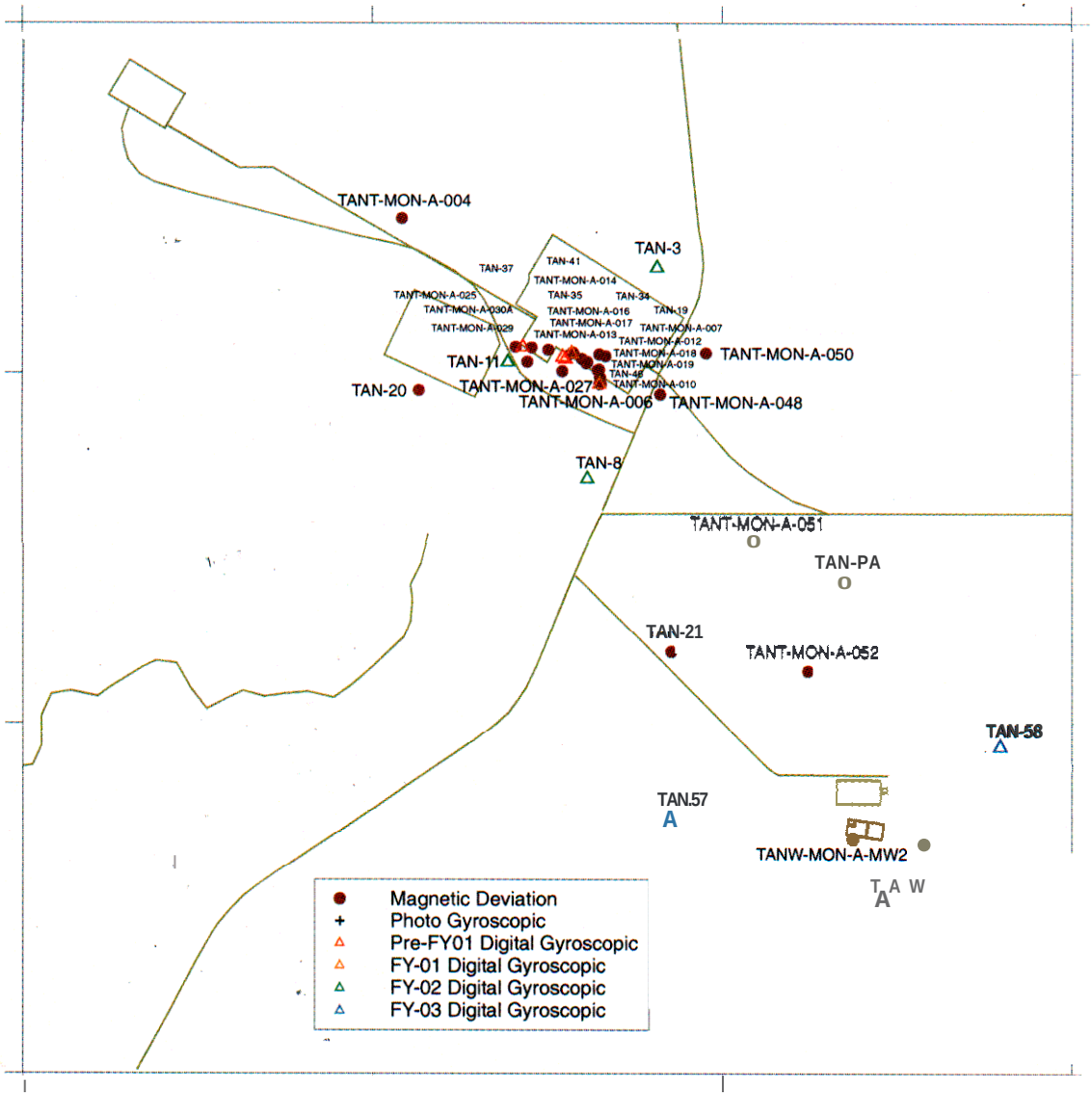

Figure F-1A. TAN-area wells with gyroscopic and magnetic deviation logs.

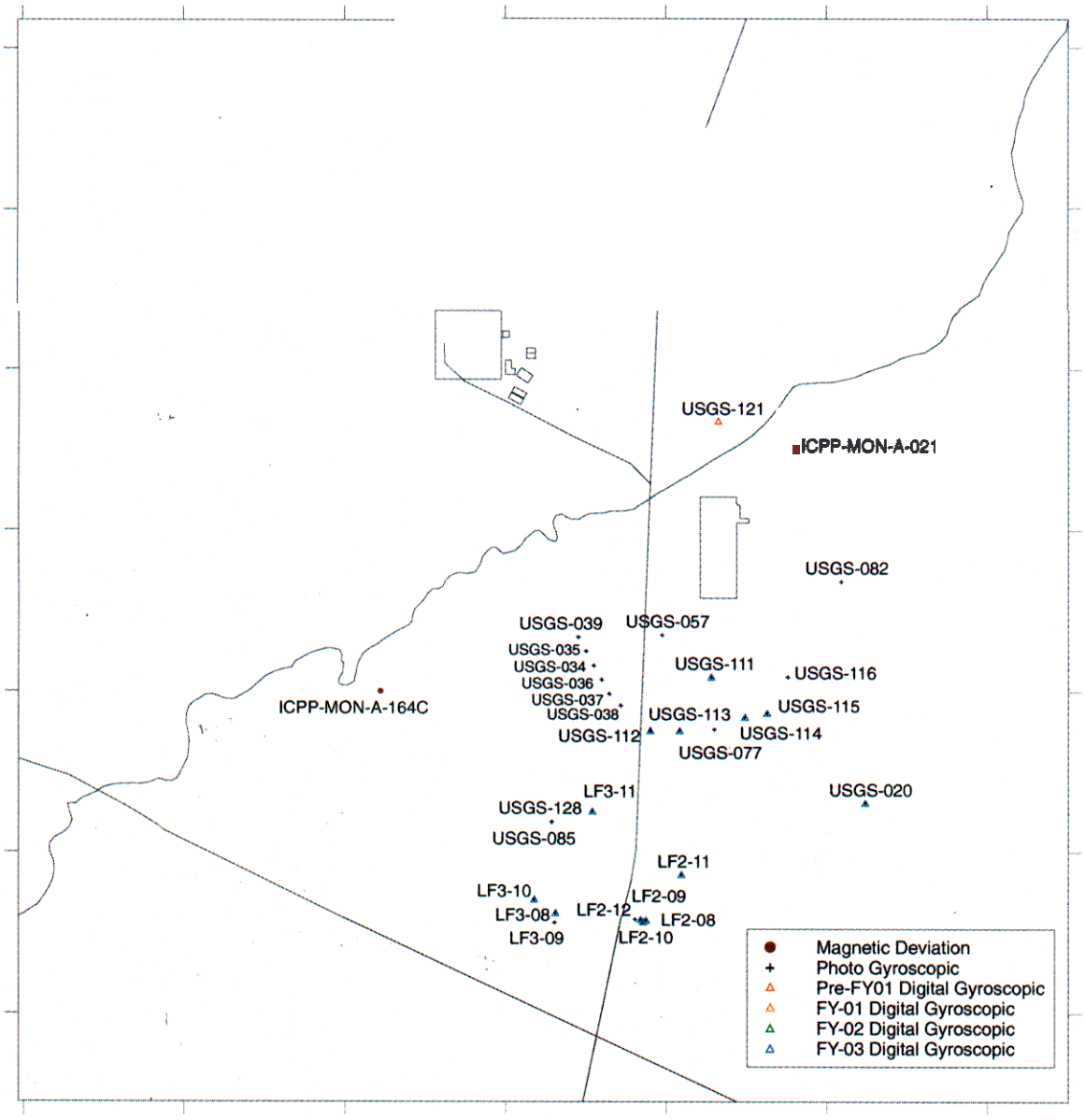

Figure F-1B. INTEC/TRA/CFA-area wells with gyroscopic and magnetic deviation logs.

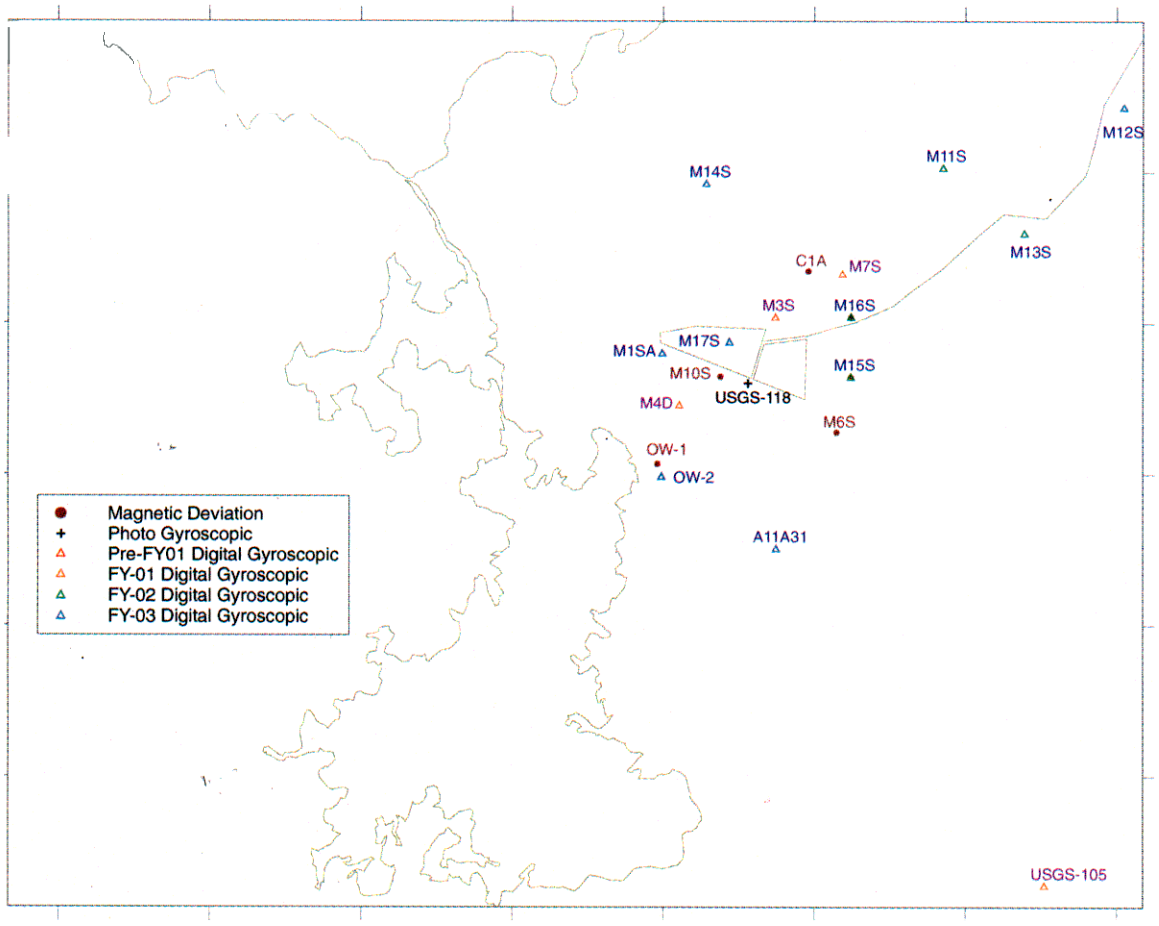

Figure F-1C. RWMC-area wells with gyroscopic and **magnetic deviation logs.**

Table F-2. New FY-02 and FY-03 gyroscopic borehole deviation logging results (all units are feet; reference datum is land surface).

Well ID	Well Name	Alias	Date Logged	Min. Depth-to-Water	Max. Depth-to-Water	Cable Depth	True Depth	Difference ("Correction Factor")
906	RWMC-MON-A-013	A11A31	11/25/02	636.5	646.4	636.00	635.88	0.12
						637.00	636.88	0.12
						638.00	637.88	0.12
						639.00	638.87	0.13
						640.00	639.87	0.13
						641.00	640.87	0.13
						642.00	641.87	0.13
						643.00	642.87	0.13
						644.00	643.87	0.13
						645.00	644.87	0.13
						646.00	645.87	0.13
1003	AFU-MON-A-001		6/12/03	585.8	592.4	585.00	584.53	0.47
						586.00	585.53	0.47
						587.00	586.53	0.47
						588.00	587.53	0.47
						589.00	588.53	0.47
						590.00	589.53	0.47
						591.00	590.53	0.47
						592.00	591.53	0.47
1004	AFU-MON-A-002		6/6/02	588.6	595.6	589.30	589.20	0.10
						590.30	590.20	0.10
						591.30	591.20	0.10
						592.30	592.20	0.10
						593.30	593.20	0.10
						594.30	594.20	0.10
						595.30	595.20	0.10
						596.30	596.20	0.10
						597.30	597.20	0.10
1006	AFU-MON-A-03A		6/5/02	599.6	606.2	599.30	599.18	0.12
						600.30	600.18	0.12
						601.30	601.18	0.12
						602.30	602.18	0.12
						603.30	603.18	0.12
						604.30	604.18	0.12
						605.30	605.18	0.12
						606.30	606.18	0.12
						607.30	607.18	0.12
						608.30	608.18	0.12
1007	AFU-MON-A-004		6/6/02	615.5	620.6	615.30	615.22	0.08
						616.30	616.22	0.08

Table F-2. (continued)

Well ID	Well Name	Alias	Date Logged	Min. Depth-to-Water	Max. Depth-to-Water	Cable Depth	True Depth	Difference ("Correction Factor")
						617.30	617.22	0.08
						618.30	618.22	0.08
						619.30	619.22	0.08
						620.30	620.22	0.08
						621.30	621.22	0.08
						622.30	622.22	0.08
1077	CFA-MON-A-001		11/14/02	483.6	490.5	483.00	482.96	0.04
						484.00	483.96	0.04
						485.00	484.96	0.04
						486.00	485.96	0.04
						487.00	486.96	0.04
						488.00	487.96	0.04
						489.00	488.96	0.04
						490.00	489.96	0.04
						491.00	490.96	0.04
1078	CFA-MON-A-002		11/18/02	482.5	487.0	482.00	481.95	0.05
						483.00	482.95	0.05
						484.00	483.95	0.05
						485.00	484.95	0.05
						486.00	485.95	0.05
						487.00	486.95	0.05
1089	CFA-MON-A-003		11/18/02	482.0	486.7	482.00	481.97	0.03
						483.00	482.97	0.03
						484.00	483.97	0.03
						485.00	484.97	0.03
						486.00	485.97	0.03
						487.00	486.97	0.03
196	LF2-08	CFA LF2-08	6/19/02	472.5	480.9	472.30	469.35	2.95
						473.30	470.35	2.95
						474.30	471.34	2.96
						475.30	472.34	2.96
						476.30	473.34	2.96
						477.30	474.33	2.97
						478.30	475.33	2.97
						479.30	476.33	2.97
						480.30	477.32	2.98
						481.30	478.32	2.98
						482.30	479.32	2.98
197	LF2-09	CFA LF2-9	11/12/02	475.3	485.8	475.00	469.74	5.26
						476.00	470.73	5.27

Table F-2. (continued)

Well ID	Well Name	Alias	Date Logged	Min. Depth-to-Water	Max. Depth-to-Water	Cable Depth	True Depth	Difference ("Correction Factor")
						477.00	471.71	5.29
						478.00	472.69	5.31
						479.00	473.67	5.33
						480.00	474.66	5.34
						481.00	475.64	5.36
						482.00	476.62	5.38
						483.00	477.61	5.39
						484.00	478.59	5.41
						485.00	479.57	5.43
						485.00	479.57	5.43
198	LF2-10	CFA LF2-10	11/12/02	475.2	482.4	475.00	474.29	0.71
						476.00	475.29	0.71
						477.00	476.28	0.72
						478.00	477.28	0.72
						479.00	478.28	0.72
						480.00	479.27	0.73
						481.00	480.27	0.73
						482.00	481.27	0.73
						483.00	482.26	0.74
199	LF2-11	CFA LF2-11	11/14/02	466.3	476.5	466.00	465.91	0.09
						467.00	466.91	0.09
						468.00	467.91	0.09
						469.00	468.91	0.09
						470.00	469.91	0.09
						471.00	470.91	0.09
						472.00	471.91	0.09
						473.00	472.91	0.09
						474.00	473.91	0.09
						475.00	474.91	0.09
						476.00	475.91	0.09
						477.00	476.91	0.09
207	LF3-08	CFA LF3-08	11/13/02	482.6	493.2	483.00	478.27	4.73
						484.00	479.24	4.76
						485.00	480.21	4.79
						486.00	481.18	4.82
						487.00	482.15	4.85
						488.00	483.12	4.88
						489.00	484.09	4.91
						490.00	485.06	4.94
						491.00	486.03	4.97
						492.00	487.00	5.00
						493.00	487.96	5.04

Table F-2. (continued)

Well ID	Well Name	Alias	Date Logged	Min. Depth-to-Water	Max. Depth-to-Water	Cable Depth	True Depth	Difference ("Correction Factor")
727	LF3-10	CFA LF3-10	11/13/02	480.5	490.9	480.00	479.94	0.06
						481.00	480.94	0.06
						482.00	481.94	0.06
						483.00	482.94	0.06
						484.00	483.94	0.06
						485.00	484.94	0.06
						486.00	485.94	0.06
						487.00	486.94	0.06
						488.00	487.94	0.06
						489.00	488.94	0.06
						490.00	489.94	0.06
						491.00	490.94	0.06
765	RWMC-M1SA	M1SA	11/21/02	581.1	595.6	581.00	580.82	0.18
						582.00	581.82	0.18
						583.00	582.82	0.18
						584.00	583.82	0.18
						585.00	584.82	0.18
						586.00	585.81	0.19
						587.00	586.81	0.19
						588.00	587.81	0.19
						589.00	588.81	0.19
						590.00	589.81	0.19
						591.00	590.81	0.19
						592.00	591.81	0.19
						593.00	592.81	0.19
						594.00	593.81	0.19
						595.00	594.81	0.19
						596.00	595.81	0.19
1212	SOUTH-MON-A-001	M11S	5/22/02	560.8	565.7	560.80	560.71	0.09
						561.80	561.71	0.09
						562.80	562.71	0.09
						563.80	563.71	0.09
						564.80	564.71	0.09
						565.80	565.71	0.09
						566.80	566.71	0.09
						567.80	567.71	0.09
						568.80	568.71	0.09
						569.80	569.71	0.09
1213	SOUTH-MON-A-002	M12S	11/21/02	530.6	537.2	530.00	529.93	0.07
						531.00	530.93	0.07
						532.00	531.93	0.07

Table F-2. (continued)

Well ID	Well Name	Alias	Date Logged	Min. Depth-to-Water	Max. Depth-to-Water	Cable Depth	True Depth	Difference ("Correction Factor")
						533.00	532.93	0.07
						534.00	533.93	0.07
						535.00	534.93	0.07
						536.00	535.93	0.07
						537.00	536.93	0.07
						538.00	537.93	0.07
1214	SOUTH-MON-A-003	M13S	6/13/02	595.5	600.4	596.30	595.81	0.49
						597.30	596.81	0.49
						598.30	597.81	0.49
						599.30	598.81	0.49
						600.30	599.81	0.49
						601.30	600.81	0.49
						602.30	601.81	0.49
						603.30	602.81	0.49
1215	SOUTH-MON-A-004	M14S	11/21/02	598.5	604.7	595.00	594.96	0.04
						596.00	595.96	0.04
						597.00	596.96	0.04
						598.00	597.96	0.04
						599.00	598.96	0.04
						600.00	599.96	0.04
						601.00	600.96	0.04
						602.00	601.96	0.04
						603.00	602.96	0.04
						604.00	603.96	0.04
						605.00	604.96	0.04
						606.00	605.96	0.04
1337	SOUTH-MON-A-010	M16S	6/13/02	577.9	577.9	577.80	575.34	2.46
						578.80	576.34	2.46
						579.80	577.34	2.46
						580.80	578.34	2.46
						581.80	579.34	2.46
						582.80	580.34	2.46
						583.80	581.34	2.46
						584.80	582.34	2.46
						585.80	583.34	2.46
1327	RWMC-MON-A-162	M17S	12/19/02	578		575.00	574.89	0.11
						576.00	575.89	0.11
						577.00	576.89	0.11
						578.00	577.89	0.11
						579.00	578.89	0.11
						580.00	579.89	0.11

Table F-2. (continued)

Well ID	Well Name	Alias	Date Logged	Min. Depth-to-Water	Max. Depth-to-Water	Cable Depth	True Depth	Difference ("Correction Factor")
						581.00	580.89	0.11
						582.00	581.89	0.11
						583.00	582.88	0.12
						584.00	583.88	0.12
						585.00	584.88	0.12
966	RWMC-MON-A-066	OW-2	11/25/02	601.3	619.3	601.00	600.96	0.04
						602.00	601.96	0.04
						603.00	602.96	0.04
						604.00	603.96	0.04
						605.00	604.96	0.04
						606.00	605.96	0.04
						607.00	606.96	0.04
						608.00	607.96	0.04
						609.00	608.96	0.04
						610.00	609.96	0.04
						611.00	610.96	0.04
						612.00	611.96	0.04
						613.00	612.96	0.04
						614.00	613.96	0.04
						615.00	614.96	0.04
						616.00	615.96	0.04
						617.00	616.96	0.04
						618.00	617.96	0.04
						619.00	618.96	0.04
						620.00	619.96	0.04
1087	PBF-MON-A-003		6/24/03	512.2	519.8	512.00	511.94	0.06
						513.00	512.94	0.06
						514.00	513.94	0.06
						515.00	514.94	0.06
						516.00	515.94	0.06
						517.00	516.94	0.06
						518.00	517.94	0.06
						519.00	518.94	0.06
						520.00	519.94	0.06
1094	PBF-MON-A-004		6/12/03	491.5	496.3	491.00	490.94	0.06
						492.00	491.94	0.06
						493.00	492.94	0.06
						494.00	493.94	0.06
						495.00	494.94	0.06
						496.00	495.94	0.06
						497.00	496.94	0.06
						498.00	497.94	0.06

Table F-2. (continued)

Well ID	Well Name	Alias	Date Logged	Min. Depth-to-Water	Max. Depth-to-Water	Cable Depth	True Depth	Difference ("Correction Factor")
342	TAN-3		8/21/02	204.0		204.00	203.99	0.01
						205.00	204.99	0.01
						206.00	205.99	0.01
						207.00	206.99	0.01
						208.00	207.99	0.01
						209.00	208.99	0.01
345	TAN-8		8/14/02	212.7	216.7	212.00	211.98	0.02
						213.00	212.98	0.02
						214.00	213.98	0.02
						215.00	214.98	0.02
						216.00	215.98	0.02
						217.00	216.98	0.02
						218.00	217.98	0.02
						219.00	218.98	0.02
349	TAN-11		8/14/02	201.2	206.4	201.00	200.99	0.01
						202.00	201.99	0.01
						203.00	202.99	0.01
						204.00	203.99	0.01
						205.00	204.99	0.01
						206.00	205.99	0.01
						207.00	206.99	0.01
1342	TAN-56	TANT-MON-A-056	3/31/03	215.7	218.7	215.00	214.96	0.04
						216.00	215.96	0.04
						217.00	216.96	0.04
						218.00	217.96	0.04
						219.00	218.96	0.04
						220.00	219.96	0.04
1343	TAN-57	TANT-MON-A-057	3/31/03	218.6	221.3	218.00	218.00	0.00
						219.00	219.00	0.00
						220.00	220.00	0.00
						221.00	221.00	0.00
						222.00	222.00	0.00
1344	TAN-58	TANT-MON-A-058	3/31/03	216.6	219.7	216.00	216.00	0.00
						217.00	217.00	0.00
						218.00	218.00	0.00
						219.00	219.00	0.00

Table F-2. (continued)

Well ID	Well Name	Alias	Date Logged	Min. Depth-to-Water	Max. Depth-to-Water	Cable Depth	True Depth	Difference ("Correction Factor")
						220.00	220.00	0.00
						221.00	221.00	0.00
763	TU-06A	TRA-6	5/29/02	465.6	474.7	465.80	465.61	0.19
						466.80	466.61	0.19
						467.80	467.61	0.19
						468.80	468.61	0.19
						469.80	469.61	0.19
						470.80	470.61	0.19
						471.80	471.61	0.19
						472.80	472.61	0.19
						473.80	473.61	0.19
						474.80	474.61	0.19
						475.80	475.61	0.19
						476.80	476.61	0.19
						477.80	477.61	0.19
731	TU-07		5/28/02	469.7	478.8	470.50	470.01	0.49
						471.50	471.01	0.49
						472.50	472.01	0.49
						473.50	473.01	0.49
						474.50	474.01	0.49
						475.50	475.01	0.49
						476.50	476.01	0.49
						477.50	477.01	0.49
						478.50	478.01	0.49
						479.50	479.01	0.49
						480.50	480.01	0.49
469	USGS-020		11/18/02	453.1	486.1"	470.00	469.93	0.07
						471.00	470.93	0.07
						472.00	471.93	0.07
						473.00	472.93	0.07
						474.00	473.92	0.08
						475.00	474.92	0.08
						476.00	475.92	0.08
						477.00	476.92	0.08
						478.00	477.92	0.08
						479.00	478.92	0.08
						480.00	479.92	0.08
560	USGS-111		11/19/02	460.1	470.0	460.00	454.50	5.50
						461.00	455.46	5.54
						462.00	456.43	5.57
						463.00	457.39	5.61

Table F-2. (continued)

Well ID	Well Name	Alias	Date Logged	Min. Depth-to-Water	Max. Depth-to-Water	Cable Depth	True Depth	Difference ("Correction Factor")
						464.00	458.35	5.65
						465.00	459.31	5.69
						466.00	460.27	5.73
						467.00	461.24	5.76
						468.00	462.20	5.80
						469.00	463.16	5.84
						470.00	464.12	5.88
						471.00	465.08	5.92
						472.00	466.05	5.95
						473.00	467.01	5.99
						474.00	467.97	6.03
561	USGS-112		11/19/02	465.9	478.5	466.00	463.45	2.55
						467.00	464.44	2.56
						468.00	465.42	2.58
						469.00	466.41	2.59
						470.00	467.39	2.61
						471.00	468.38	2.62
						472.00	469.36	2.64
						473.00	470.35	2.65
						474.00	471.33	2.67
						475.00	472.32	2.68
						476.00	473.30	2.70
						477.00	474.29	2.71
						478.00	475.27	2.73
						479.00	476.26	2.74
						480.00	477.24	2.76
562	USGS-113		11/19/02	462.8	478.9	463.00	457.69	5.31
						464.00	458.67	5.33
						465.00	459.64	5.36
						466.00	460.61	5.39
						467.00	461.58	5.42
						468.00	462.55	5.45
						469.00	463.53	5.47
						470.00	464.50	5.50
						471.00	465.47	5.53
						472.00	466.44	5.56
						473.00	467.41	5.59
						474.00	468.39	5.61
						475.00	469.36	5.64
						476.00	470.33	5.67
						477.00	471.30	5.70
						478.00	472.27	5.73

Table F-2. (continued)

Well ID	Well Name	Alias	Date Logged	Min. Depth-to-Water	Max. Depth-to-Water	Cable Depth	True Depth	Difference ("Correction Factor")
						479.00	473.25	5.75
						480.00	474.22	5.78
563	USGS-114		11/20/02	459.6	472.7	460.00	455.62	4.38
						461.00	456.59	4.41
						462.00	457.57	4.43
						463.00	458.54	4.46
						464.00	459.52	4.48
						465.00	460.49	4.51
						466.00	461.46	4.54
						467.00	462.44	4.56
						468.00	463.41	4.59
						469.00	464.39	4.61
						470.00	465.36	4.64
						471.00	466.34	4.66
						472.00	467.31	4.69
						473.00	468.29	4.71
						474.00	469.26	4.74
						475.00	470.24	4.76
564	USGS-115		11/26/02	457.6	468.8[b]	445.00	443.33	1.67
						446.00	444.32	1.68
						447.00	445.30	1.70
						448.00	446.29	1.71
						449.00	447.28	1.72
						450.00	448.26	1.74
						451.00	449.25	1.75
1413	USGS-128		11/20/02	481.4	483.0	481.00	480.97	0.03
						482.00	481.97	0.03
						483.00	482.97	0.03
						484.00	483.97	0.03
						485.00	484.97	0.03
						486.00	485.97	0.03
						487.00	486.97	0.03

a. Log ends at 480.
b. Log ends early (451 ft bls).

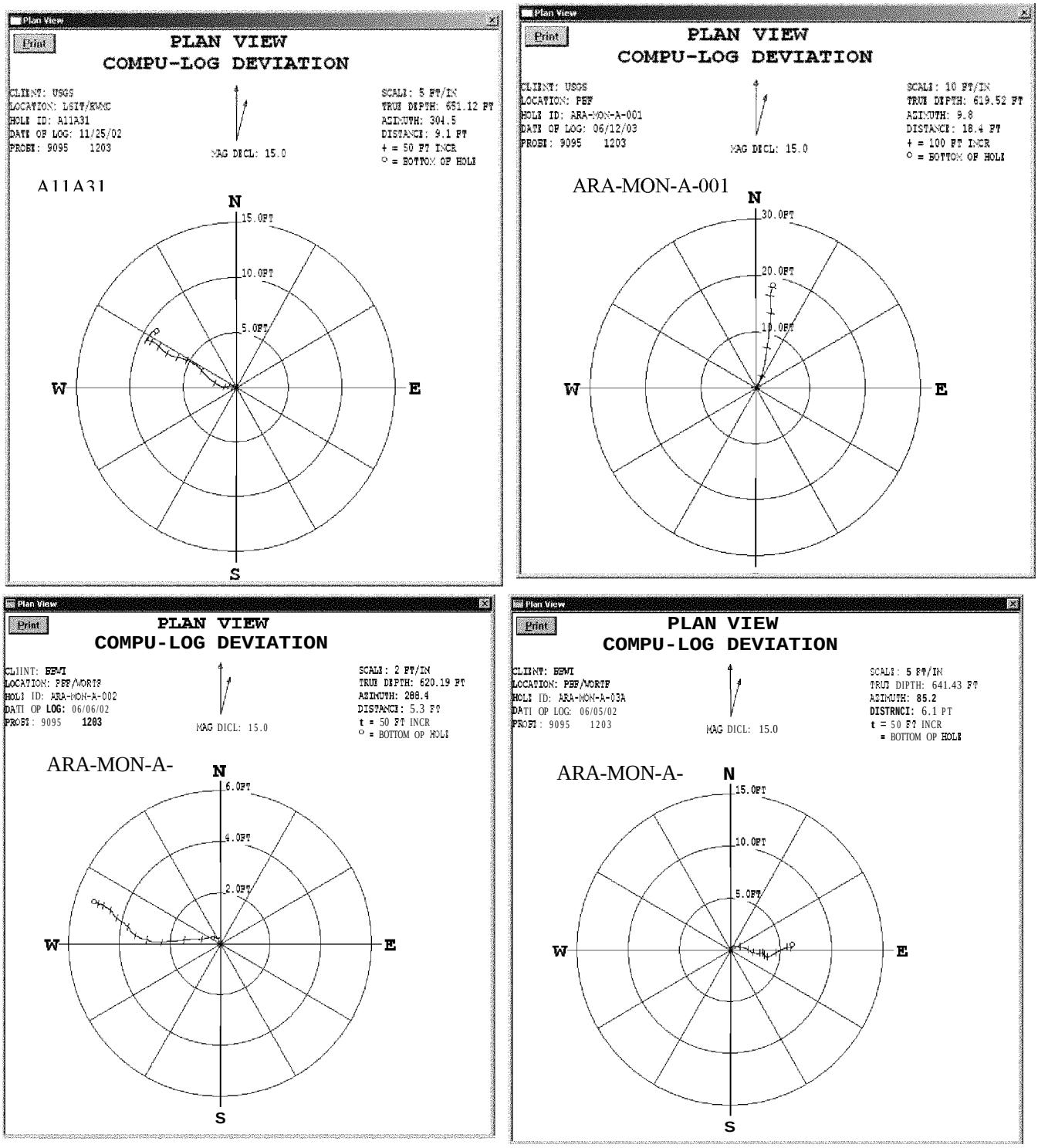

Figure F-2. Compu-log plan view diagrams of borehole deviation for wells with digital gyroscopic data collected in FY02 and FY03.

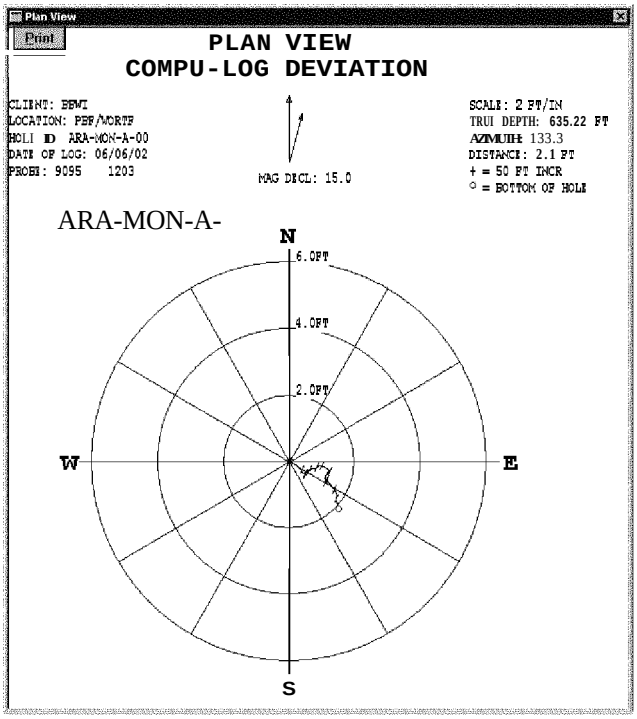
Plan View
Print
PLAN VIEW
COMPU-LOG DEVIATION
CLIENT: BEWI
LOCATION: PEF/NORTF
HOLI ID ARA-MON-A-00
DATI OF LOG: 06/06/02
PROEI: 9095 1203
MAG DICL: 15.0
SCALI: 2 FT/IN
TRUI DEPTH: 635.22 FT
AZIMUIH: 133.3
DISTANCI: 2.1 FT
+ = 50 FT INCR
○ = BOTTOM OF HOLI
ARA-MON-A-
N
6.0FT
4.0FT
2.0FT
W
E
S

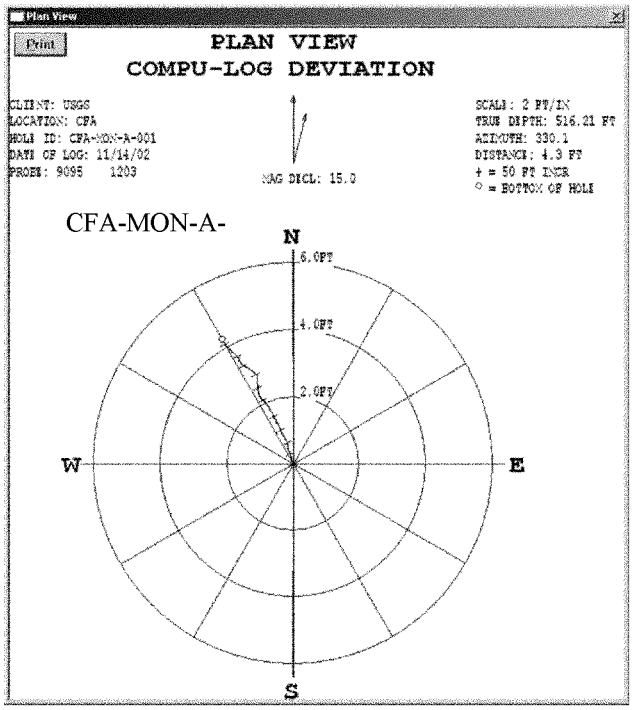
Plan View
Print
PLAN VIEW
COMPU-LOG DEVIATION
CLIENT: USGS
LOCATION: CFA
HOLI ID: CFA-MON-A-001
DATI OF LOG: 11/14/02
PROEI: 9095 1203
MAG DICL: 15.0
SCALI: 2 FT/IN
TRUI DIPTH: 516.21 FT
AZIMUTH: 330.1
DISTANCI: 4.3 FT
+ = 50 FT INCR
○ = BOTTOM OF HOLI
CFA-MON-A-
N
6.0FT
4.0FT
2.0FT
W
E
S

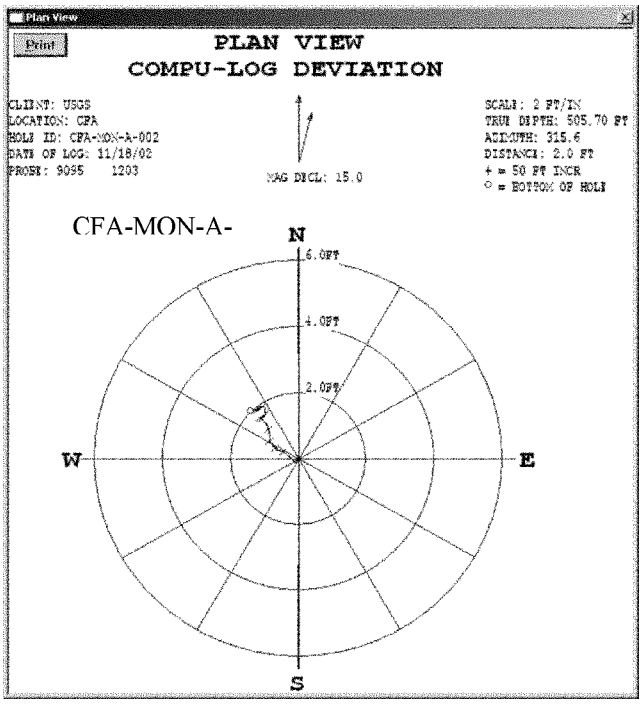
Plan View
Print
PLAN VIEW
COMPU-LOG DEVIATION
CLIENT: USGS
LOCATION: CFA
HOLI ID: CFA-MON-A-002
DATI OF LOG: 11/18/02
PROEI: 9095 1203
MAG DICL: 15.0
SCALI: 2 FT/IN
TRUI DIPTH: 505.70 FT
AZIMUTH: 315.6
DISTANCI: 2.0 FT
+ = 50 FT INCR
○ = BOTTOM OF HOLI
CFA-MON-A-
N
6.0FT
4.0FT
2.0FT
W
E
S

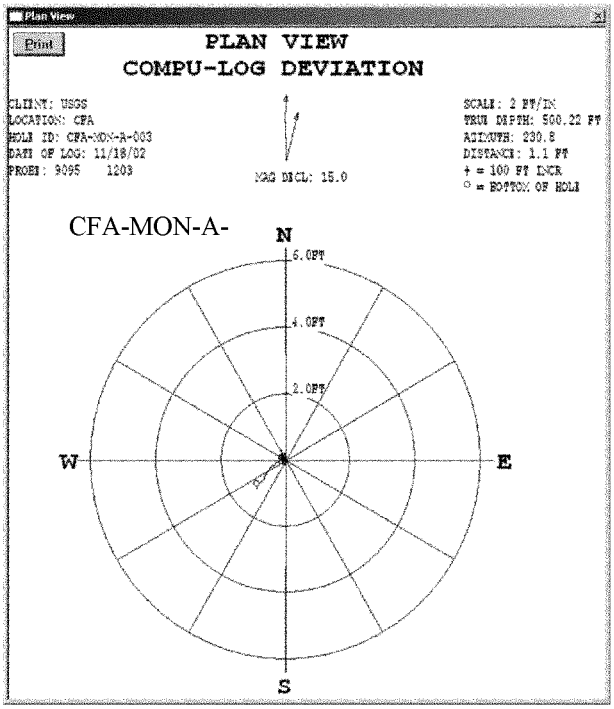
Plan View
Print
PLAN VIEW
COMPU-LOG DEVIATION
CLIENT: USGS
LOCATION: CFA
HOLI ID: CFA-MON-A-003
DATI OF LOG: 11/18/02
PROEI: 9095 1203
MAG DICL: 15.0
SCALI: 2 FT/IN
TRUI DIPTH: 500.22 FT
AZIMUTH: 230.8
DISTANCI: 1.1 FT
+ = 100 FT INCR
○ = BOTTOM OF HOLI
CFA-MON-A-
N
6.0FT
4.0FT
2.0FT
W
E
S

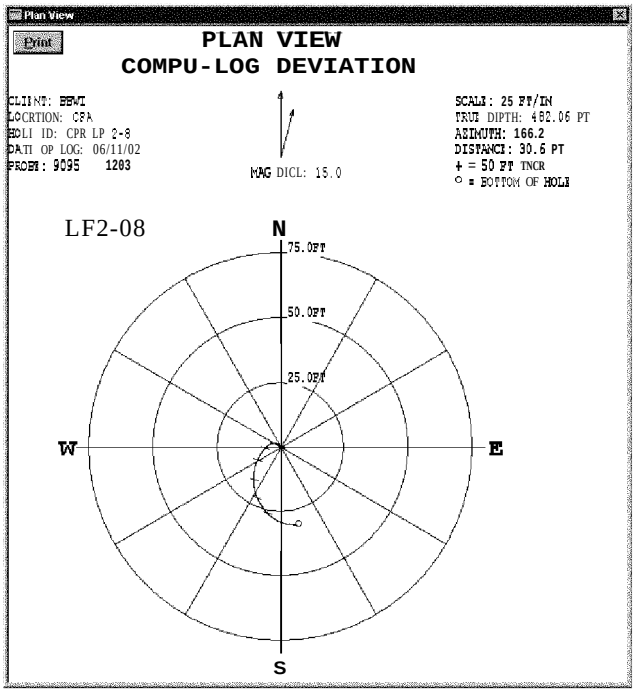
Plan View
Print
PLAN VIEW
COMPU-LOG DEVIATION
CLIENT: BBWI
LOCATION: CPA
HOLE ID: CPR LP 2-8
DATE OF LOG: 06/11/02
PROBE: 9095 1203
MAG DECL: 15.0
SCALE: 25 FT/IN
TRUE DEPTH: 482.06 FT
AZIMUTH: 166.2
DISTANCE: 30.6 FT
+ = 50 FT INCR
○ = BOTTOM OF HOLE
LF2-08
N
75.0FT
50.0FT
25.0FT
W
E
S

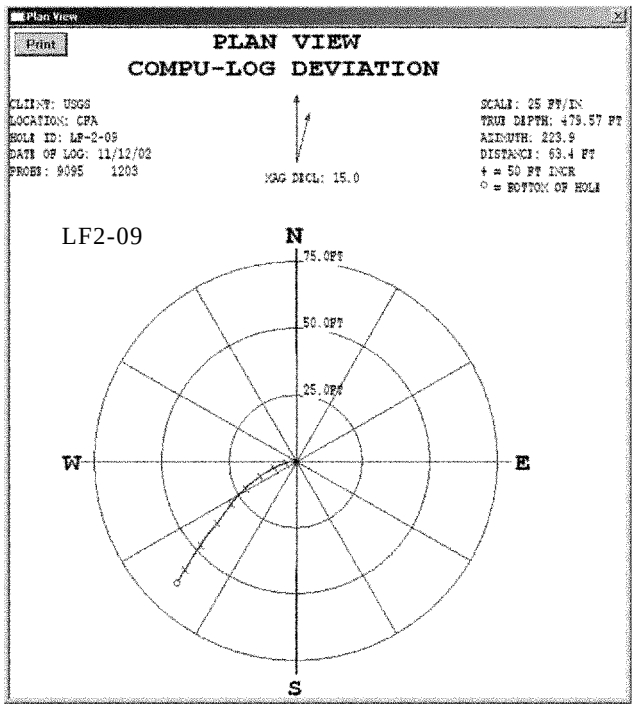
Plan View
Print
PLAN VIEW
COMPU-LOG DEVIATION
CLIENT: USGS
LOCATION: CPA
HOLE ID: LF-2-09
DATE OF LOG: 11/12/02
PROBE: 9095 1203
MAG DECL: 15.0
SCALE: 25 FT/IN
TRUE DEPTH: 479.57 FT
AZIMUTH: 223.9
DISTANCE: 63.4 FT
+ = 50 FT INCR
○ = BOTTOM OF HOLE
LF2-09
N
75.0FT
50.0FT
25.0FT
W
E
S

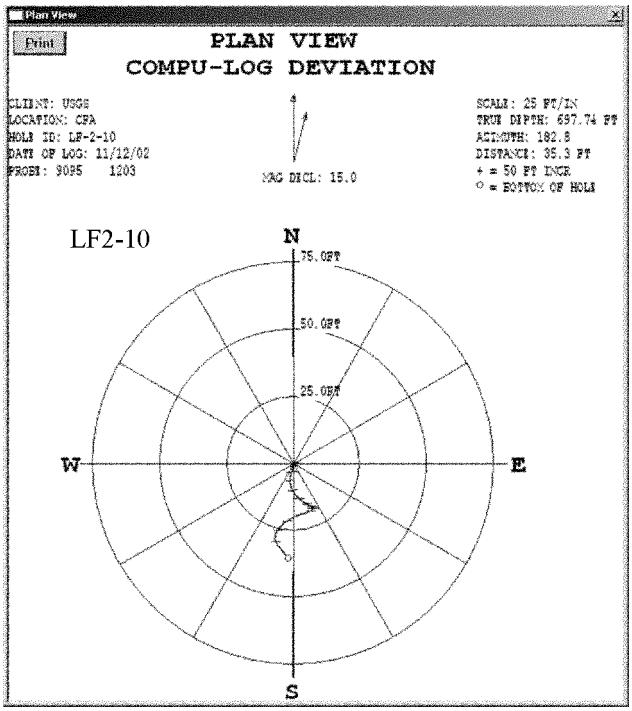
Plan View
Print
PLAN VIEW
COMPU-LOG DEVIATION
CLIENT: USGS
LOCATION: CPA
HOLE ID: LF-2-10
DATE OF LOG: 11/12/02
PROBE: 9095 1203
MAG DECL: 15.0
SCALE: 25 FT/IN
TRUE DEPTH: 697.74 FT
AZIMUTH: 182.8
DISTANCE: 35.3 FT
+ = 50 FT INCR
○ = BOTTOM OF HOLE
LF2-10
N
75.0FT
50.0FT
25.0FT
W
E
S

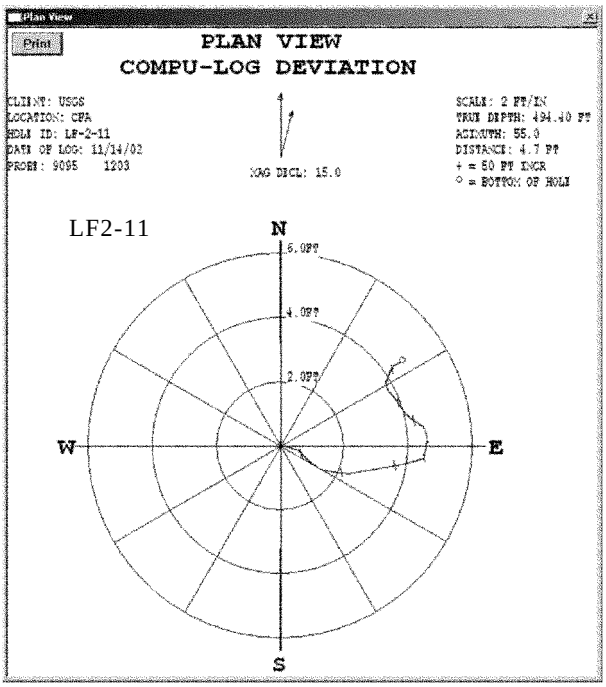
Plan View
Print
PLAN VIEW
COMPU-LOG DEVIATION
CLIENT: USGS
LOCATION: CPA
HOLE ID: LF-2-11
DATE OF LOG: 11/14/02
PROBE: 9095 1203
MAG DECL: 15.0
SCALE: 2 FT/IN
TRUE DEPTH: 494.40 FT
AZIMUTH: 55.0
DISTANCE: 4.7 FT
+ = 50 FT INCR
○ = BOTTOM OF HOLE
LF2-11
N
6.0FT
4.0FT
2.0FT
W
E
S

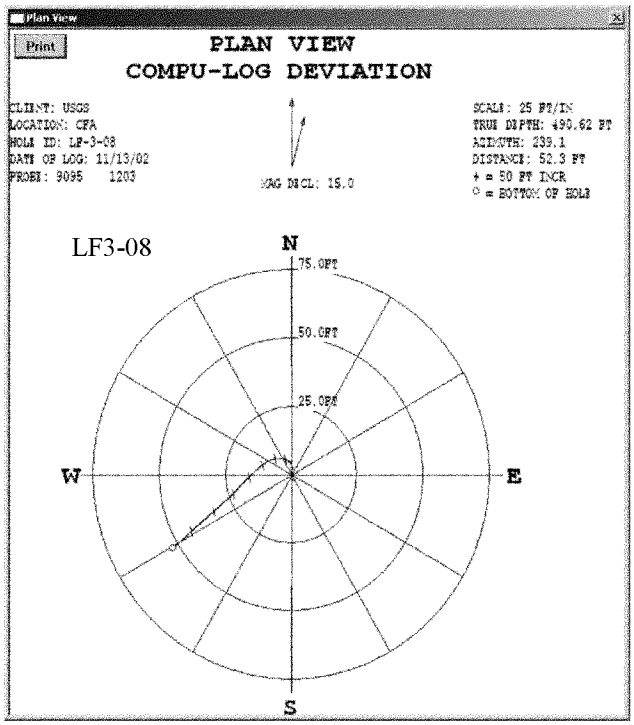
Plan View
Print
PLAN VIEW
COMPU-LOG DEVIATION
CLIENT: USGS
LOCATION: CFA
HOLE ID: LF-3-08
DATE OF LOG: 11/13/02
PROBE: 9095 1203
MAG DECL: 15.0
SCALE: 25 FT/IN
TRUE DEPTH: 490.62 FT
AZIMUTH: 239.1
DISTANCE: 52.3 FT
+ = 50 FT INCR
O = BOTTOM OF HOLE
LF3-08
N
75.0FT
50.0FT
25.0FT
W
E
S

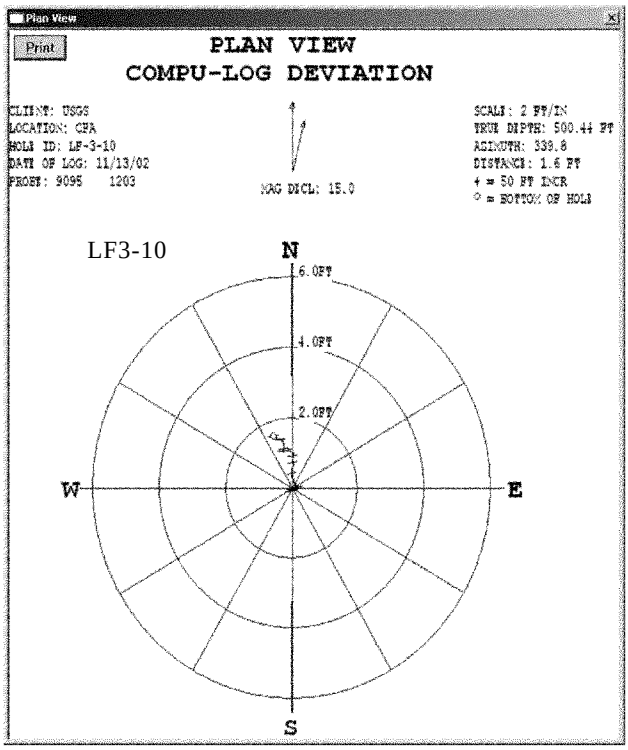
Plan View
Print
PLAN VIEW
COMPU-LOG DEVIATION
CLIENT: USGS
LOCATION: CFA
HOLE ID: LF-3-10
DATE OF LOG: 11/13/02
PROBE: 9095 1203
MAG DECL: 15.0
SCALE: 2 FT/IN
TRUE DEPTH: 500.44 FT
AZIMUTH: 339.8
DISTANCE: 1.6 FT
+ = 50 FT INCR
O = BOTTOM OF HOLE
LF3-10
N
6.0FT
4.0FT
2.0FT
W
E
S

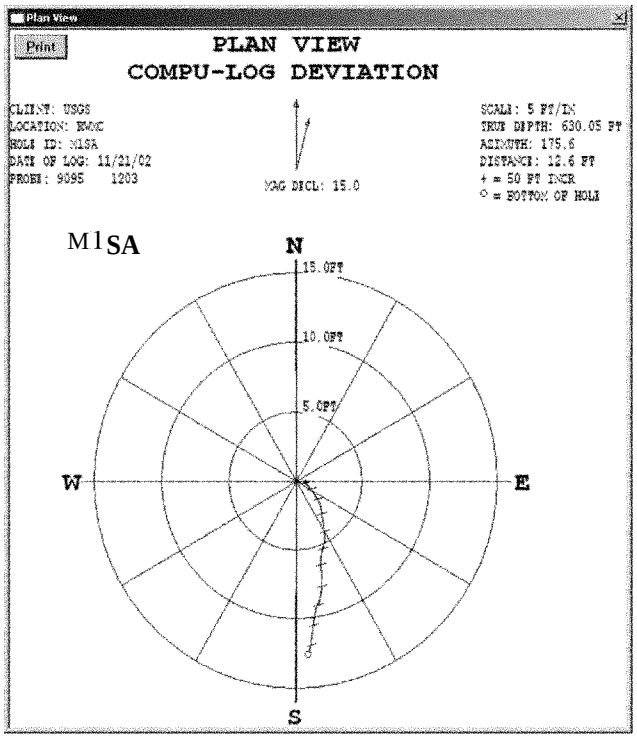
Plan View
Print
PLAN VIEW
COMPU-LOG DEVIATION
CLIENT: USGS
LOCATION: RWMC
HOLE ID: M1SA
DATE OF LOG: 11/21/02
PROBE: 9095 1203
MAG DECL: 15.0
SCALE: 5 FT/IN
TRUE DEPTH: 630.05 FT
AZIMUTH: 175.6
DISTANCE: 12.6 FT
+ = 50 FT INCR
O = BOTTOM OF HOLE
M1SA
N
15.0FT
10.0FT
5.0FT
W
E
S

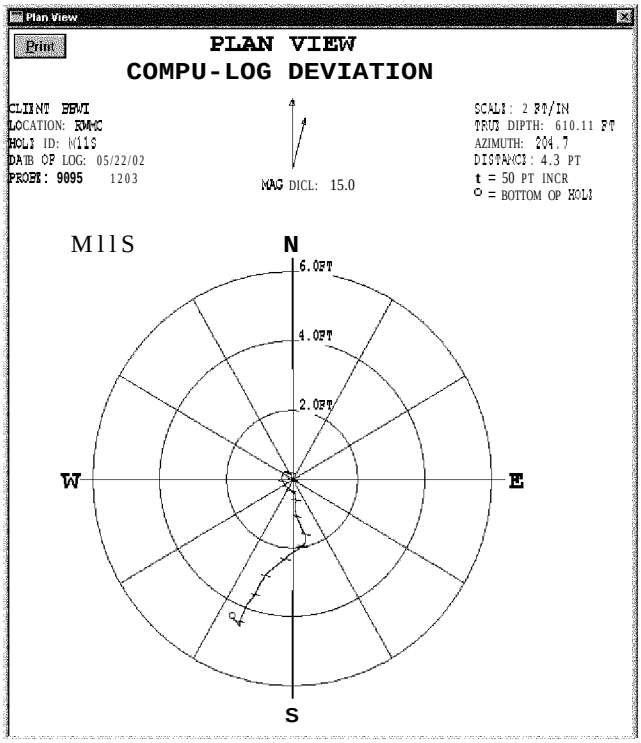
Plan View
Print
PLAN VIEW
COMPU-LOG DEVIATION
CLIENT BEWI
LOCATION: RWMC
HOLE ID: M11S
DATE OF LOG: 05/22/02
PROBE: 9095 1203
MAG DECL: 15.0
SCALE: 2 FT/IN
TRUE DEPTH: 610.11 FT
AZIMUTH: 204.7
DISTANCE: 4.3 FT
+ = 50 FT INCR
O = BOTTOM OF HOLE
M11S
N
6.0FT
4.0FT
2.0FT
W
E
S

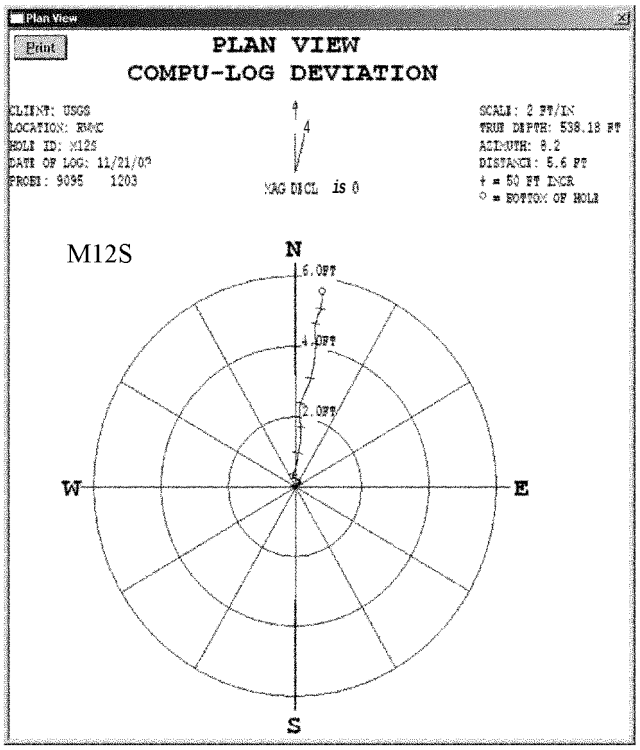
Plan View
Print
PLAN VIEW
COMPU-LOG DEVIATION
CLIENT: USGS
LOCATION: RWMC
HOLE ID: M12S
DATE OF LOG: 11/21/02
PROBE: 9095 1203
MAG DECL is 0
SCALE: 2 FT/IN
TRUE DEPTH: 538.18 FT
AZIMUTH: 8.2
DISTANCE: 5.6 FT
+ = 50 FT INCR
○ = BOTTOM OF HOLE
M12S
N
6.0FT
4.0FT
2.0FT
W
E
S

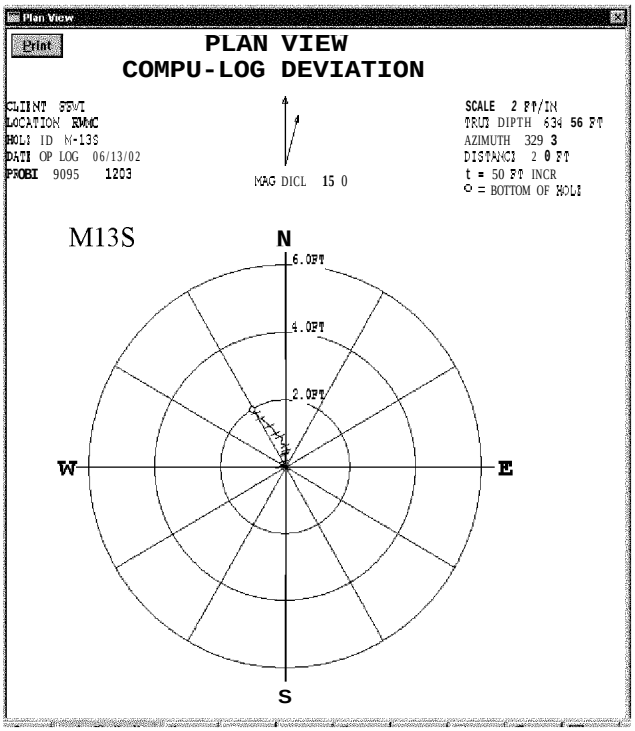
Plan View
Print
PLAN VIEW
COMPU-LOG DEVIATION
CLIENT RSWI
LOCATION RWMC
HOLE ID N-13S
DATE OF LOG 06/13/02
PROBE 9095 1203
MAG DECL 15 0
SCALE 2 FT/IN
TRUE DEPTH 634 56 FT
AZIMUTH 329 3
DISTANCE 2 0 FT
t = 50 FT INCR
○ = BOTTOM OF HOLE
M13S
N
6.0FT
4.0FT
2.0FT
W
E
S

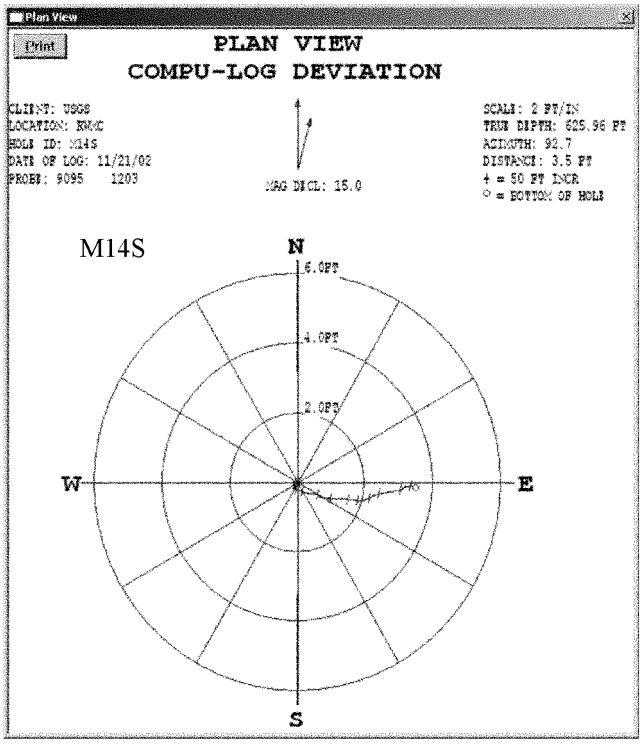
Plan View
Print
PLAN VIEW
COMPU-LOG DEVIATION
CLIENT: USGS
LOCATION: RWMC
HOLE ID: M14S
DATE OF LOG: 11/21/02
PROBE: 9095 1203
MAG DECL: 15.0
SCALE: 2 FT/IN
TRUE DEPTH: 625.96 FT
AZIMUTH: 92.7
DISTANCE: 3.5 FT
+ = 50 FT INCR
○ = BOTTOM OF HOLE
M14S
N
6.0FT
4.0FT
2.0FT
W
E
S

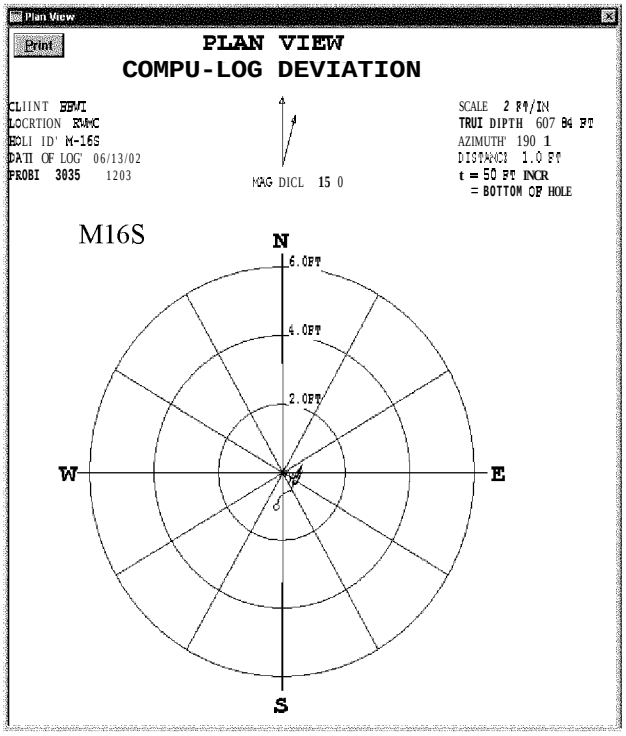
Plan View
Print
PLAN VIEW
COMPU-LOG DEVIATION
CLIENT RSWI
LOCATION RWMC
HOLE ID M-16S
DATE OF LOG 06/13/02
PROBE 3035 1203
MAG DECL 15 0
SCALE 2 FT/IN
TRUE DEPTH 607 84 FT
AZIMUTH 190 1
DISTANCE 1.0 FT
t = 50 FT INCR
= BOTTOM OF HOLE
M16S
N
6.0FT
4.0FT
2.0FT
W
E
S

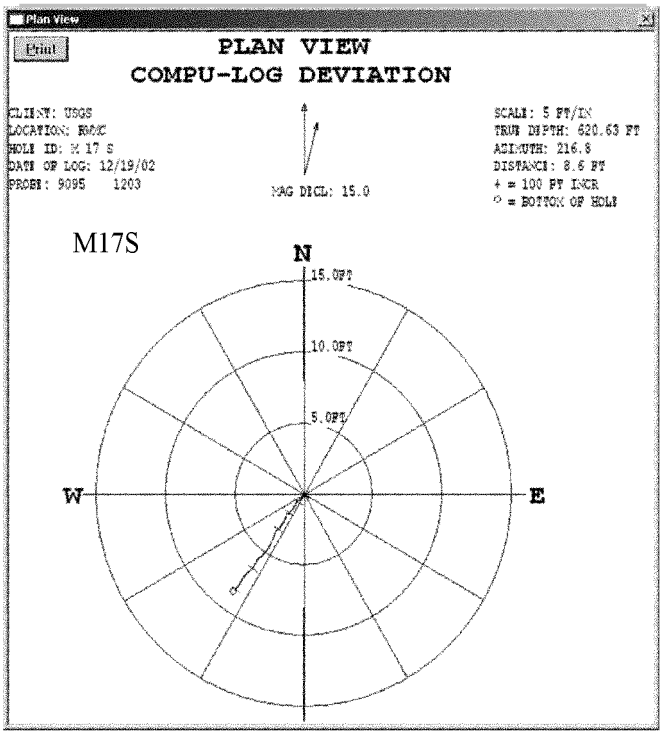
Plan View
Print
PLAN VIEW
COMPU-LOG DEVIATION
CLIENT: USGS
LOCATION: RWMC
HOLE ID: M 17 S
DATE OF LOG: 12/19/02
PROBE: 9095 1203
MAG DECL: 15.0
SCALE: 5 FT/IN
TRUE DEPTH: 620.63 FT
AZIMUTH: 216.8
DISTANCE: 8.6 FT
+ = 100 FT INCR
○ = BOTTOM OF HOLE
M17S
N
15.0FT
10.0FT
5.0FT
W
E

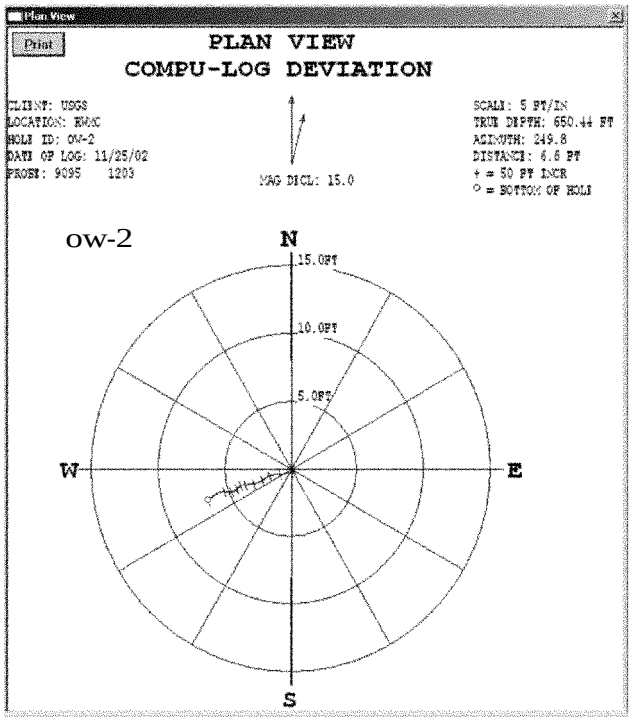
Plan View
Print
PLAN VIEW
COMPU-LOG DEVIATION
CLIENT: USGS
LOCATION: RWMC
HOLE ID: OW-2
DATE OF LOG: 11/25/02
PROBE: 9095 1203
MAG DECL: 15.0
SCALE: 5 FT/IN
TRUE DEPTH: 650.44 FT
AZIMUTH: 249.8
DISTANCE: 6.6 FT
+ = 50 FT INCR
○ = BOTTOM OF HOLE
ow-2
N
15.0FT
10.0FT
5.0FT
W
E
S

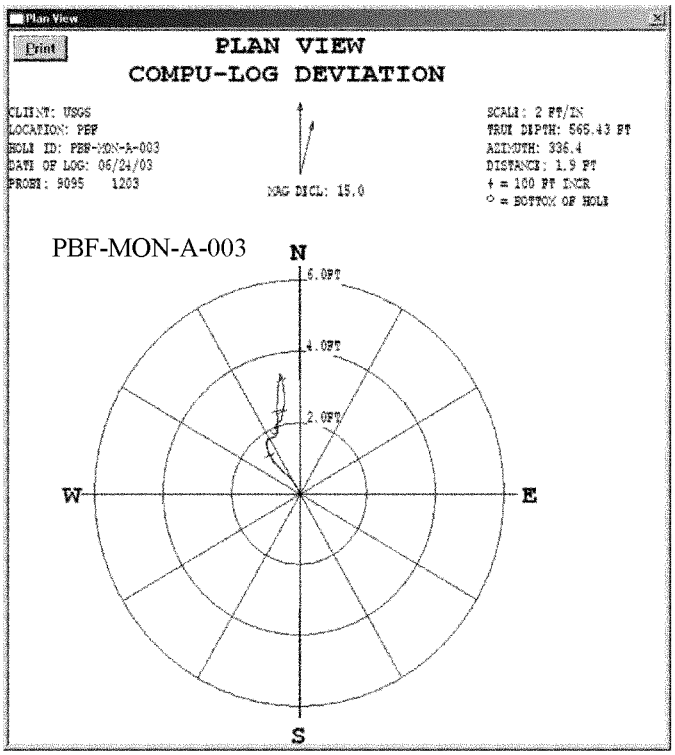
Plan View
Print
PLAN VIEW
COMPU-LOG DEVIATION
CLIENT: USGS
LOCATION: PBF
HOLE ID: PBF-MON-A-003
DATE OF LOG: 06/24/03
PROBE: 9095 1203
MAG DECL: 15.0
SCALE: 2 FT/IN
TRUE DEPTH: 565.43 FT
AZIMUTH: 336.4
DISTANCE: 1.9 FT
+ = 100 FT INCR
○ = BOTTOM OF HOLE
PBF-MON-A-003
N
6.0FT
4.0FT
2.0FT
W
E
S

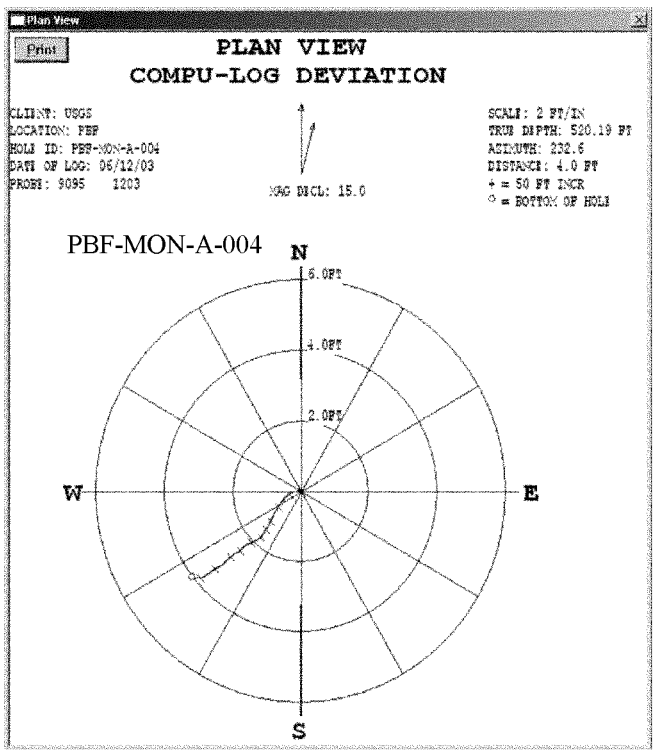
Plan View
Print
PLAN VIEW
COMPU-LOG DEVIATION
CLIENT: USGS
LOCATION: PBF
HOLE ID: PBF-MON-A-004
DATE OF LOG: 06/12/03
PROBE: 9095 1203
MAG DECL: 15.0
SCALE: 2 FT/IN
TRUE DEPTH: 520.19 FT
AZIMUTH: 232.6
DISTANCE: 4.0 FT
+ = 50 FT INCR
○ = BOTTOM OF HOLE
PBF-MON-A-004
N
6.0FT
4.0FT
2.0FT
W
E
S

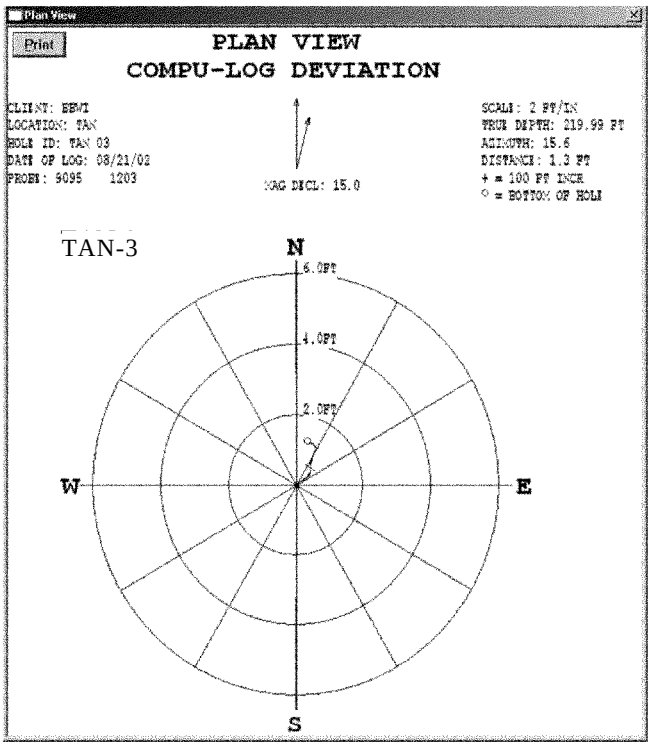
Plan View
Print
PLAN VIEW
COMPU-LOG DEVIATION
CLIENT: BEWI
LOCATION: TAN
HOLE ID: TAN 03
DATE OF LOG: 08/21/02
PROBE: 9095 1203
MAG DECL: 15.0
SCALE: 2 FT/IN
TRUE DEPTH: 219.99 FT
AZIMUTH: 15.6
DISTANCE: 1.3 FT
+ = 100 FT INCR
○ = BOTTOM OF HOLE
TAN-3
N
6.0FT
4.0FT
2.0FT
W
E
S

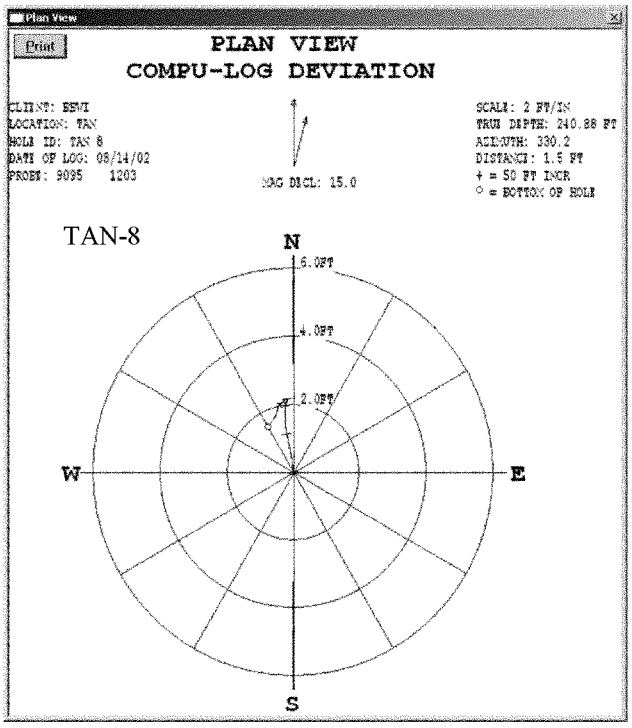
Plan View
Print
PLAN VIEW
COMPU-LOG DEVIATION
CLIENT: BEWI
LOCATION: TAN
HOLE ID: TAN 8
DATE OF LOG: 08/14/02
PROBE: 9095 1203
MAG DECL: 15.0
SCALE: 2 FT/IN
TRUE DEPTH: 240.88 FT
AZIMUTH: 330.2
DISTANCE: 1.5 FT
+ = 50 FT INCR
○ = BOTTOM OF HOLE
TAN-8
N
6.0FT
4.0FT
2.0FT
W
E
S

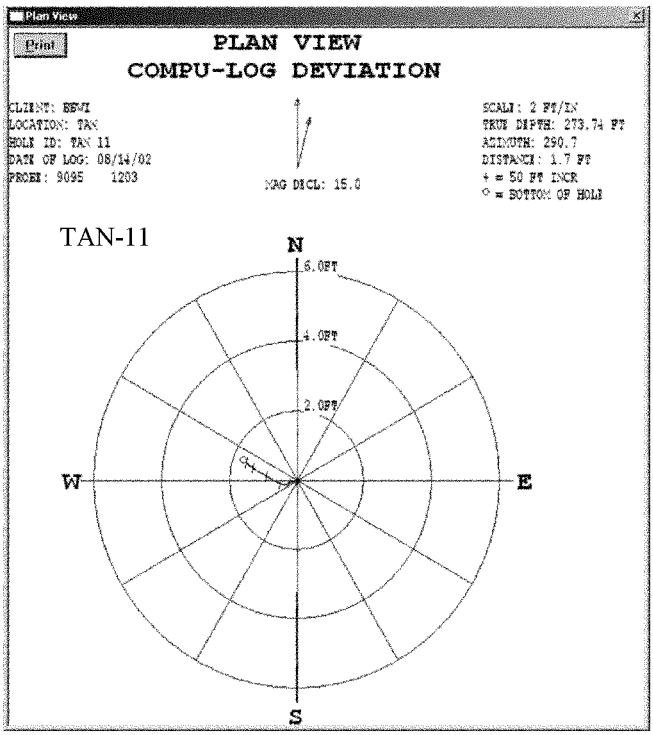
Plan View
Print
PLAN VIEW
COMPU-LOG DEVIATION
CLIENT: BEWI
LOCATION: TAN
HOLE ID: TAN 11
DATE OF LOG: 08/14/02
PROBE: 9095 1203
MAG DECL: 15.0
SCALE: 2 FT/IN
TRUE DEPTH: 273.74 FT
AZIMUTH: 290.7
DISTANCE: 1.7 FT
+ = 50 FT INCR
○ = BOTTOM OF HOLE
TAN-11
N
6.0FT
4.0FT
2.0FT
W
E
S

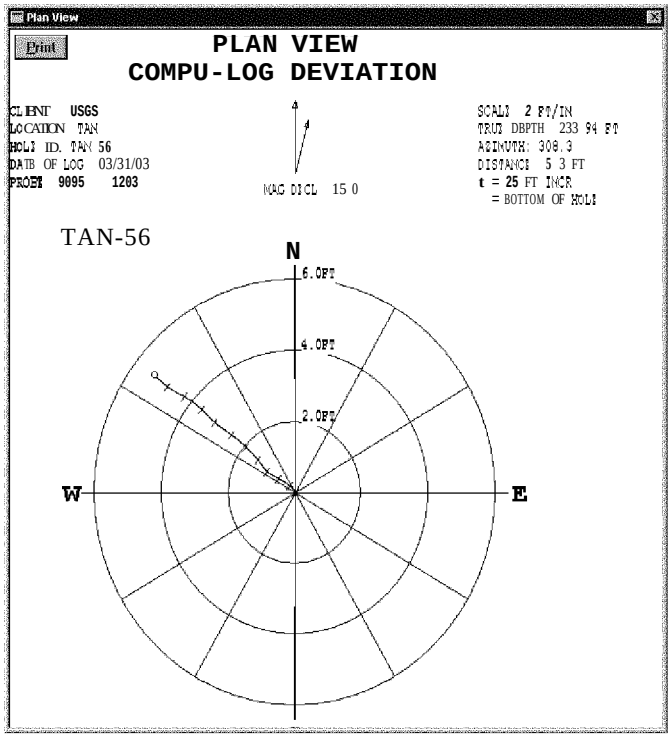
Plan View
Print
PLAN VIEW
COMPU-LOG DEVIATION
CLIENT USGS
LOCATION TAN
HOLE ID. TAN 56
DATE OF LOG 03/31/03
PROBE 9095 1203
MAG DECL 15 0
SCALE 2 FT/IN
TRUE DEPTH 233 94 FT
AZIMUTH: 308.3
DISTANCE 5 3 FT
+ = 25 FT INCR
= BOTTOM OF HOLE
TAN-56
N
6.0FT
4.0FT
2.0FT
W
E

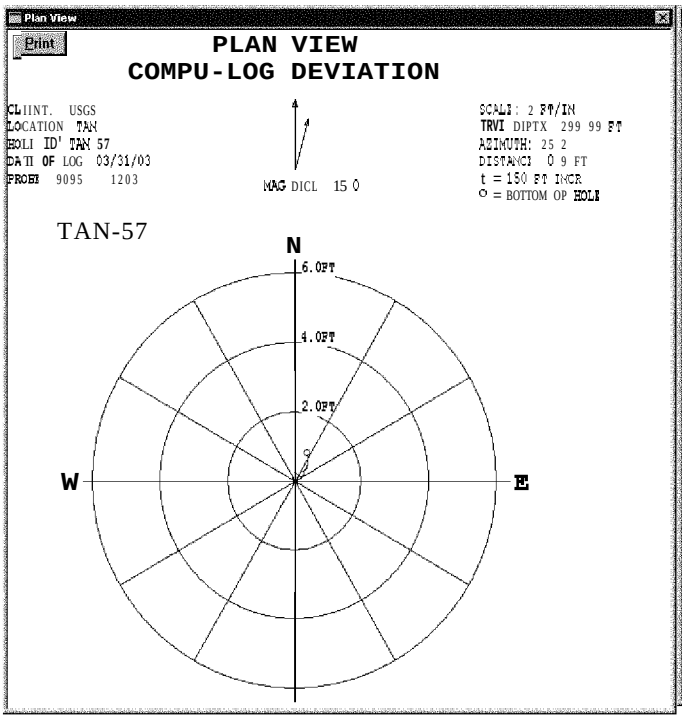
Plan View
Print
PLAN VIEW
COMPU-LOG DEVIATION
CLIINT. USGS
LOCATION TAN
HOLI ID' TAN 57
DATI OF LOG 03/31/03
PROEI 9095 1203
MAG DICL 15 0
SCALI: 2 FT/IN
TRVI DIPTX 299 99 FT
AZIMUTH: 25 2
DISTANCI 0 9 FT
t = 150 FT INCR
O = BOTTOM OP HOLI
TAN-57
N
6.0FT
4.0FT
2.0FT
W
E

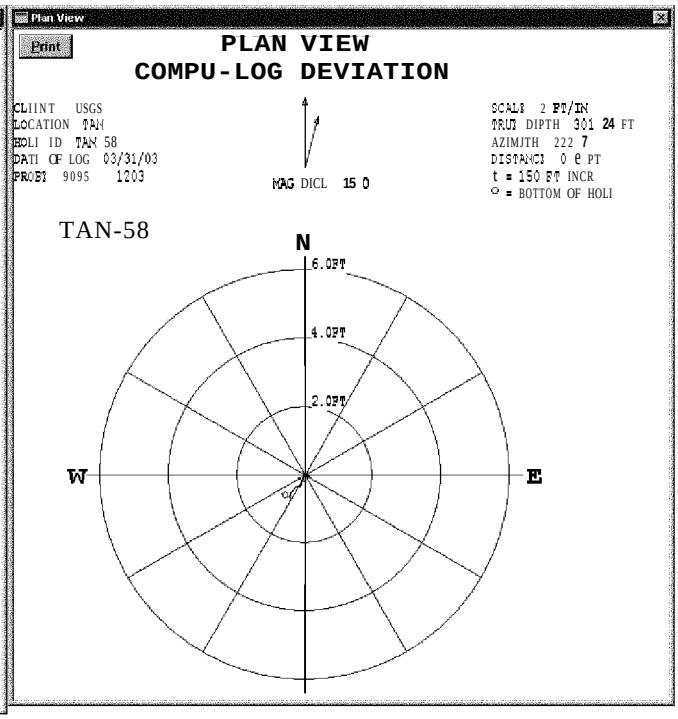
Plan View
Print
PLAN VIEW
COMPU-LOG DEVIATION
CLIINT USGS
LOCATION TAN
HOLI ID TAN 58
DATI OF LOG 03/31/03
PROEI 9095 1203
MAG DICL 15 0
SCALI 2 FT/IN
TRUI DIPTH 301 24 FT
AZIMJTH 222 7
DISTANCI 0 e PT
t = 150 FT INCR
O = BOTTOM OF HOLI
TAN-58
N
6.0FT
4.0FT
2.0FT
W
E

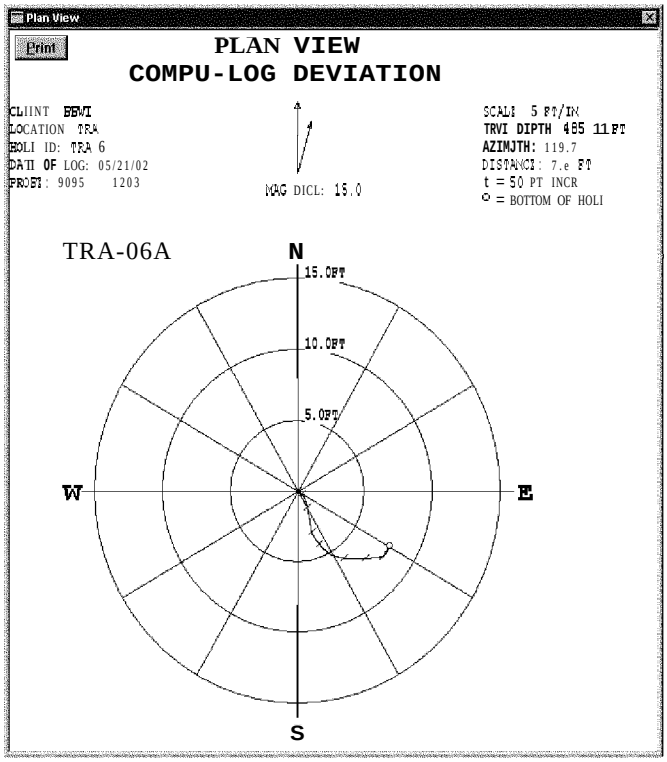
Plan View
Print
PLAN VIEW
COMPU-LOG DEVIATION
CLIINT BBWI
LOCATION TRA
HOLI ID: TRA 6
DATI OF LOG: 05/21/02
PROEI: 9095 1203
MAG DICL: 15.0
SCALI 5 FT/IN
TRVI DIPTH 485 11FT
AZIMJTH: 119.7
DISTANCI: 7.e FT
t = 50 PT INCR
O = BOTTOM OF HOLI
TRA-06A
N
15.0FT
10.0FT
5.0FT
W
E
S

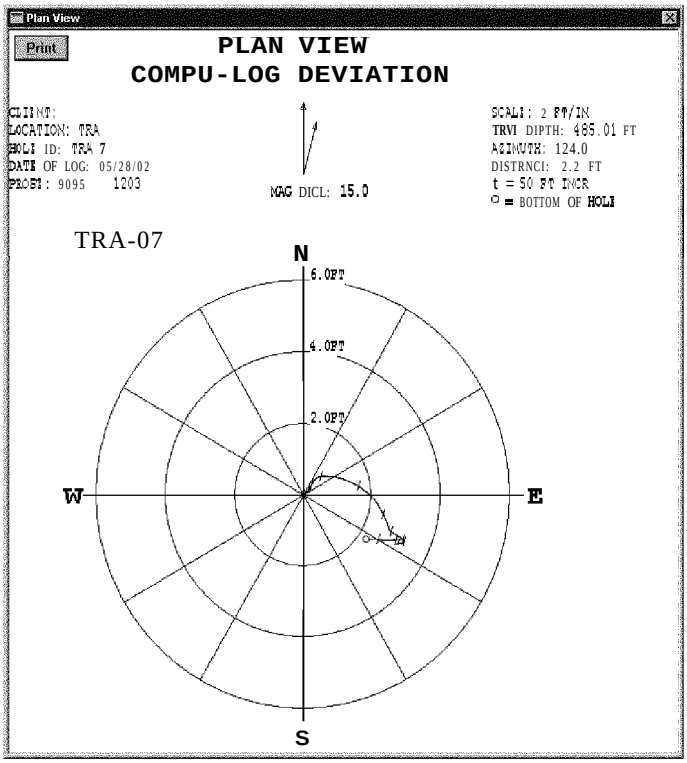
Plan View
Print
PLAN VIEW
COMPU-LOG DEVIATION
CLIINT:
LOCATION: TRA
HOLI ID: TRA 7
DATI OF LOG: 05/28/02
PROEI: 9095 1203
MAG DICL: 15.0
SCALI: 2 FT/IN
TRVI DIPTH: 485.01 FT
AZIMUTH: 124.0
DISTRNCI: 2.2 FT
t = 50 FT INCR
O = BOTTOM OF HOLI
TRA-07
N
6.0FT
4.0FT
2.0FT
W
E
S

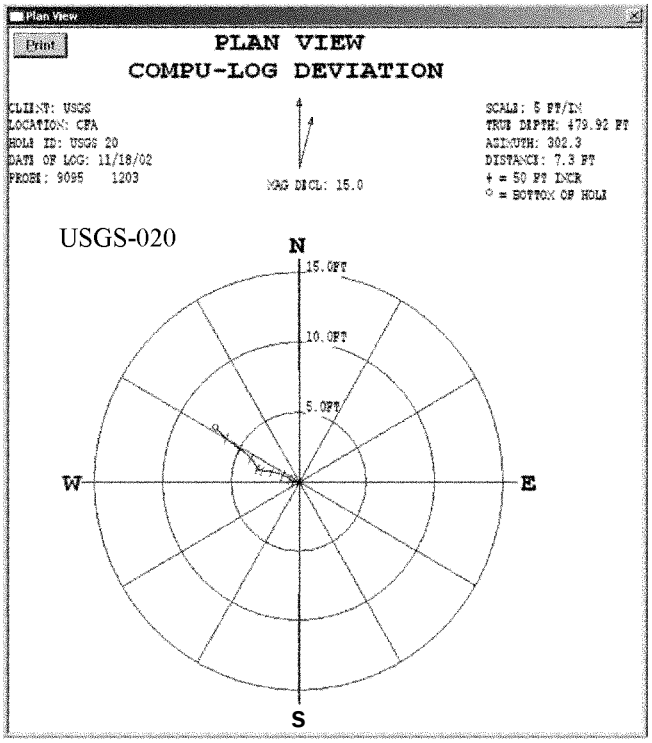
Plan View
Print
PLAN VIEW
COMPU-LOG DEVIATION
CLIENT: USGS
LOCATION: CFA
HOLE ID: USGS 20
DATE OF LOG: 11/18/02
PROBE: 9095 1203
MAG DECL: 15.0
SCALE: 5 FT/IN
TRUE DEPTH: 479.92 FT
AZIMUTH: 302.3
DISTANCE: 7.3 FT
+ = 50 FT INCR
○ = BOTTOM OF HOLE
USGS-020
N
15.0FT
10.0FT
5.0FT
W
E
S

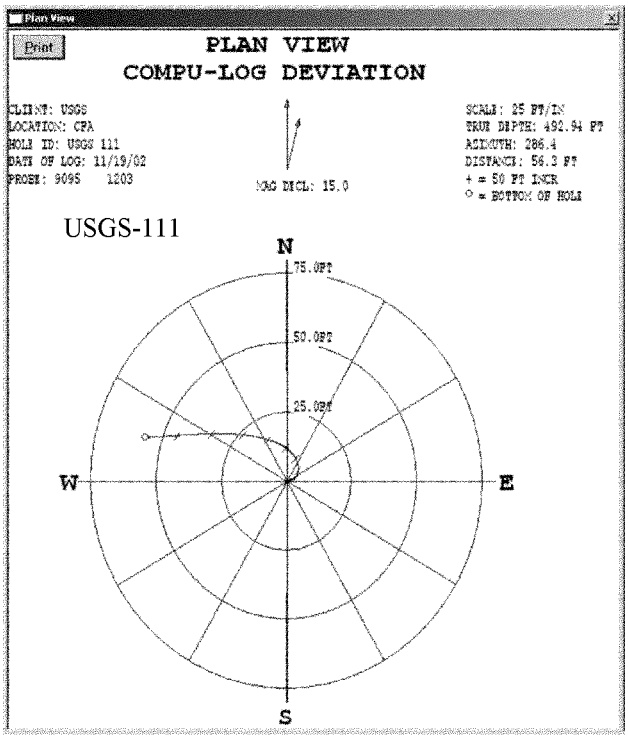
Plan View
Print
PLAN VIEW
COMPU-LOG DEVIATION
CLIENT: USGS
LOCATION: CFA
HOLE ID: USGS 111
DATE OF LOG: 11/19/02
PROBE: 9095 1203
MAG DECL: 15.0
SCALE: 25 FT/IN
TRUE DEPTH: 492.94 FT
AZIMUTH: 286.4
DISTANCE: 56.3 FT
+ = 50 FT INCR
○ = BOTTOM OF HOLE
USGS-111
N
75.0FT
50.0FT
25.0FT
W
E
S

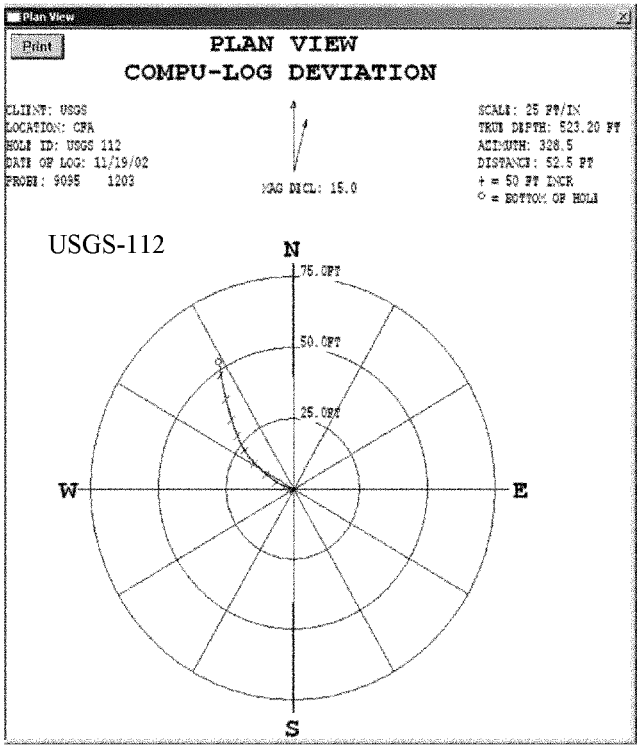
Plan View
Print
PLAN VIEW
COMPU-LOG DEVIATION
CLIENT: USGS
LOCATION: CFA
HOLE ID: USGS 112
DATE OF LOG: 11/19/02
PROBE: 9095 1203
MAG DECL: 15.0
SCALE: 25 FT/IN
TRUE DEPTH: 523.20 FT
AZIMUTH: 328.5
DISTANCE: 52.5 FT
+ = 50 FT INCR
○ = BOTTOM OF HOLE
USGS-112
N
75.0FT
50.0FT
25.0FT
W
E
S

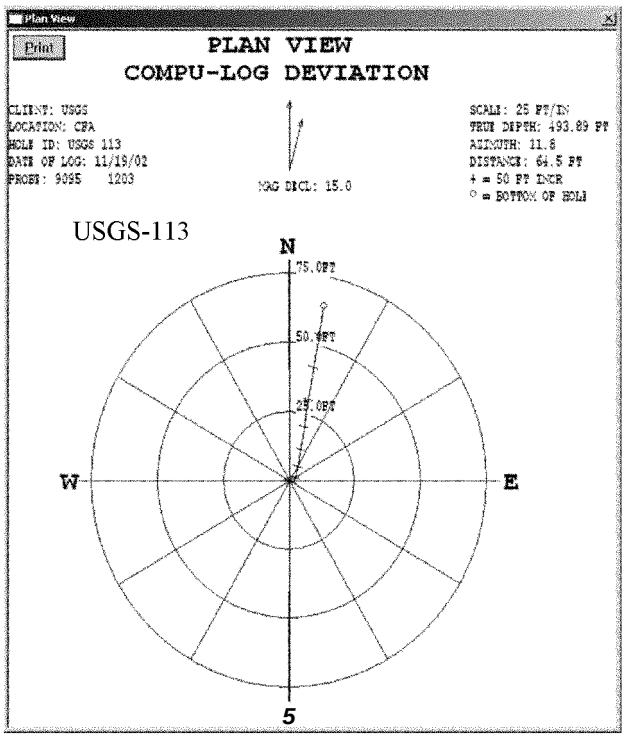
Plan View
Print
PLAN VIEW
COMPU-LOG DEVIATION
CLIENT: USGS
LOCATION: CFA
HOLE ID: USGS 113
DATE OF LOG: 11/19/02
PROBE: 9095 1203
MAG DECL: 15.0
SCALE: 25 FT/IN
TRUE DEPTH: 493.89 FT
AZIMUTH: 11.8
DISTANCE: 64.5 FT
+ = 50 FT INCR
○ = BOTTOM OF HOLE
USGS-113
N
75.0FT
50.0FT
25.0FT
W
E
5

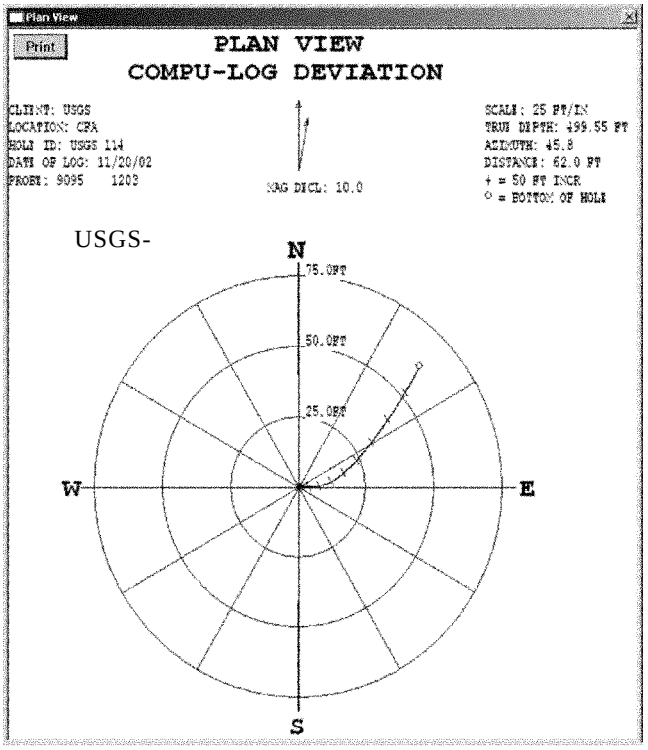
Plan View
Print
PLAN VIEW
COMPU-LOG DEVIATION
CLIENT: USGS
LOCATION: CFA
HOLE ID: USGS 114
DATE OF LOG: 11/20/02
PROBE: 9095 1203
MAG DECL: 10.0
SCALE: 25 FT/IN
TRUE DEPTH: 499.55 FT
AZIMUTH: 45.8
DISTANCE: 62.0 FT
+ = 50 FT INCR
○ = BOTTOM OF HOLE
USGS-
N
75.0FT
50.0FT
25.0FT
W
E
S

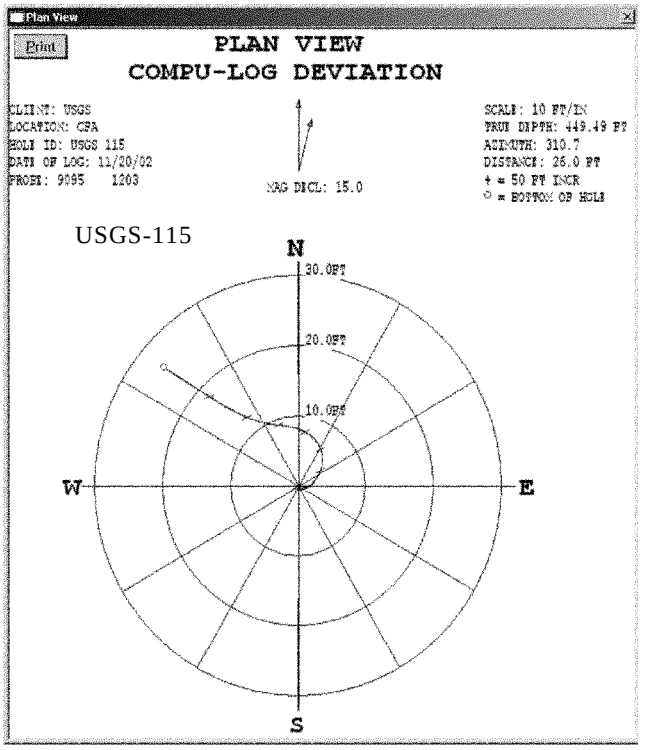
Plan View
Print
PLAN VIEW
COMPU-LOG DEVIATION
CLIENT: USGS
LOCATION: CFA
HOLE ID: USGS 115
DATE OF LOG: 11/20/02
PROBE: 9095 1203
MAG DECL: 15.0
SCALE: 10 FT/IN
TRUE DEPTH: 449.49 FT
AZIMUTH: 310.7
DISTANCE: 26.0 FT
+ = 50 FT INCR
○ = BOTTOM OF HOLE
USGS-115
N
30.0FT
20.0FT
10.0FT
W
E
S

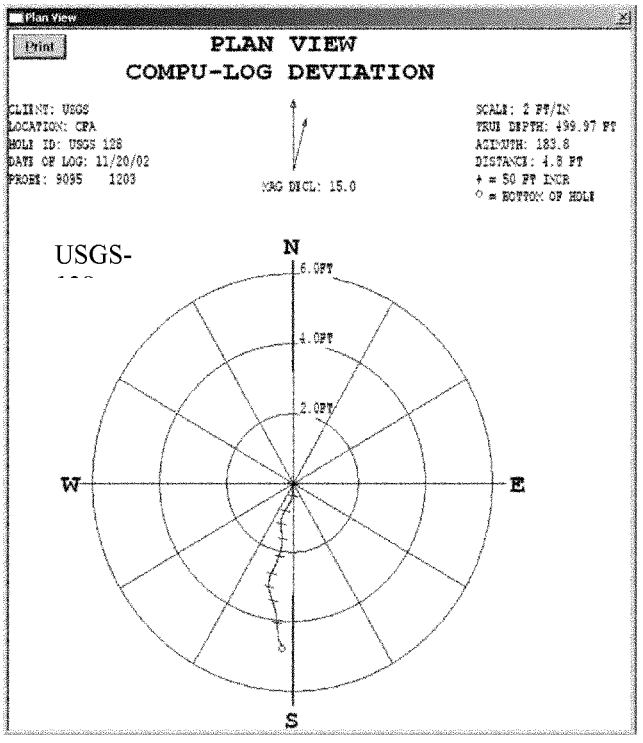
Plan View
Print
PLAN VIEW
COMPU-LOG DEVIATION
CLIENT: USGS
LOCATION: CFA
HOLE ID: USGS 128
DATE OF LOG: 11/20/02
PROBE: 9095 1203
MAG DECL: 15.0
SCALE: 2 FT/IN
TRUE DEPTH: 499.97 FT
AZIMUTH: 183.8
DISTANCE: 4.8 FT
+ = 50 FT INCR
○ = BOTTOM OF HOLE
USGS-
N
6.0FT
4.0FT
2.0FT
W
E
S