# Appendix A

# Project Schedule

# Appendix A
# Project Schedule

## Working Schedule for SFE-20 RD/RA WP

| ID | Task Name | Duration | Start | Finish |
|---|---|---|---|---|
| 1 | Finalize Group 7 RD/RA Work Plan | 47 days | Thu 5/1/03 | Fri 7/4/03 |
| 2 | Draft Final Closure Plan | 35 days | Thu 5/1/03 | Wed 6/18/03 |
| 3 | Public Comment of Closure Plan | 30 days | Thu 6/19/03 | Wed 7/30/03 |
| 4 | Finalize Revised Closure Plan | 30 days | Thu 7/31/03 | Wed 9/10/03 |
| 5 | Draft CWP Revision | 35 days | Thu 6/19/03 | Wed 8/6/03 |
| 6 | Start Phase I | 0 days | Fri 10/1/04 | Fri 10/1/04 |
| 7 | **Phase I Remediation** | **656 days** | **Thu 4/1/04** | **Thu 10/5/06** |
| 8 | Detail Work Planning | 131 days | Thu 4/1/04 | Thu 9/30/04 |
| 9 | Bid & Award for Phase I Remediation | 80 days | Fri 10/1/04 | Thu 1/20/05 |
| 10 | Mobilization | 20 days | Fri 1/21/05 | Thu 2/17/05 |
| 11 | Phase I Excavation | 100 days | Fri 2/18/05 | Thu 7/7/05 |
| 12 | Remove Tank and Ancillary Equipment | 90 days | Fri 7/8/05 | Thu 11/10/05 |
| 13 | Store and Monitor Tank | 75 days | Fri 11/11/05 | Thu 2/23/06 |
| 14 | Prefinal Inspection Complete | 0 days | Thu 2/23/06 | Thu 2/23/06 |
| 15 | Ship Tank and Contents Off-site for Treatment & Disposal | 60 days | Fri 2/24/06 | Thu 5/18/06 |
| 16 | Treat and Dispose of Tank and Contents | 100 days | Fri 5/19/06 | Thu 10/5/06 |
| 17 | Demobilization | 20 days | Fri 11/11/05 | Thu 12/8/05 |
| 18 | **Sampling Project Work Order Development** | **39 days** | **Fri 7/8/05** | **Wed 8/31/05** |
| 30 | **Sampling Mockup** | **29 days** | **Fri 8/12/05** | **Wed 9/21/05** |
| 38 | **Characterization Sampling** | **111 days** | **Thu 9/1/05** | **Thu 2/2/06** |
| 48 | RCRA Sample Report | 88 days | Thu 10/6/05 | Mon 2/6/06 |
| 49 | Closeout Phase I | 60 days | Fri 2/3/06 | Thu 4/27/06 |
| 50 | Phase I Complete | 0 days | Thu 10/5/06 | Thu 10/5/06 |
| 51 | Start Phase II | 0 days | Wed 10/1/08 | Wed 10/1/08 |
| 52 | **Phase II Remediation** | **549 days** | **Wed 10/1/08** | **Mon 11/8/10** |
| 53 | Review/Revise RD/RA Work Plan | 60 days | Wed 10/1/08 | Tue 12/23/08 |
| 54 | Bid & Award for Phase II Remediation | 160 days | Wed 12/24/08 | Tue 8/4/09 |
| 55 | Mobilization | 10 days | Wed 8/5/09 | Tue 8/18/09 |
| 56 | Start Phase II Excavation & Soil Disposal to ICDF | 60 days | Wed 8/19/09 | Tue 11/10/09 |
| 57 | Winter Curtailment | 120 days | Wed 11/11/09 | Tue 4/27/10 |
| 58 | Remove Vault and Other Structures to ICDF | 60 days | Wed 4/28/10 | Tue 7/20/10 |
| 59 | Complete Phase II Excavation & Disposal to ICDF | 35 days | Wed 7/21/10 | Tue 9/7/10 |
| 60 | Backfill and Regrade | 20 days | Wed 9/8/10 | Tue 10/5/10 |
| 61 | Demobilization | 20 days | Wed 10/6/10 | Tue 11/2/10 |
| 62 | Prepare and Submit Closure Certification to DEQ | 44 days | Wed 9/8/10 | Mon 11/8/10 |
| 63 | Phase II Complete | 0 days | Mon 11/8/10 | Mon 11/8/10 |
| 64 | **Project Closeout** | **157 days** | **Tue 11/9/10** | **Wed 6/15/11** |
| 65 | Agency Prefinal Inspection | 3 days | Tue 11/9/10 | Thu 11/11/10 |
| 66 | Corrective Actions | 20 days | Fri 11/12/10 | Thu 12/9/10 |
| 67 | Agency Final Inspection | 3 days | Fri 12/10/10 | Tue 12/14/10 |
| 68 | Prepare Draft Remedial Action Report | 43 days | Wed 12/15/10 | Fri 2/11/11 |
| 69 | Submit Draft Remedial Action Report to Agencies | 0 days | Fri 2/11/11 | Fri 2/11/11 |
| 70 | Agency Review of Remedial Action Report | 32 days | Mon 2/14/11 | Tue 3/29/11 |
| 71 | Revise Draft RA Report | 32 days | Wed 3/30/11 | Thu 5/12/11 |
| 72 | Agency Review of Draft Final RA Report | 12 days | Fri 5/13/11 | Mon 5/30/11 |
| 73 | Revise Draft Final RA Report | 12 days | Tue 5/31/11 | Wed 6/15/11 |
| 74 | Submit Final Remedial Action Report | 0 days | Wed 6/15/11 | Wed 6/15/11 |

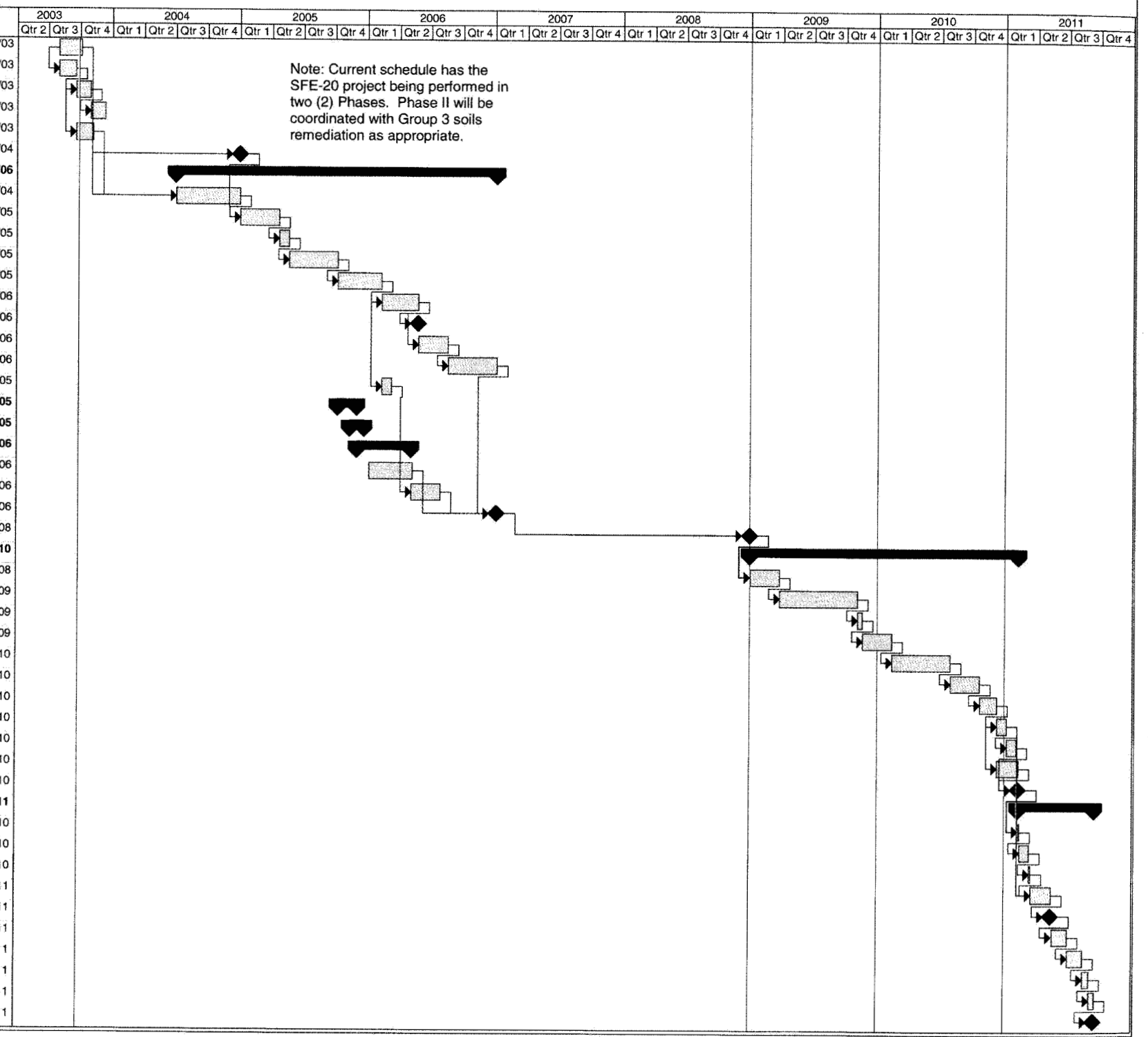


SFE-20 RDRA WP Final Schedule.mpp

Page 1

Wed 6/25/03 3:47 PM

# Appendix B

# Project Cost Estimate

# Project Summary Report

Project Name: ***INTEC SP 6/ WAG 3 Projects/Group 7/Work Package 1-RD/RA WP***

Client: ***L. Davison***
Prepared By: ***J. Folker/J. Grenz***
Estimate Type: ***Project Support***

Project Location: ***INTEC SFE-20***
Estimate Number: ***2977-la***

| Level | Group | Description | Estimate Subtotal | Escalation | Contingency | Contingency % | TOTAL |
|---|---|---|---|---|---|---|---|
| 600 | | Phase I, Remove and Sample Tank | $2,665,865 | $250,294 | $537,795 | 18.44% | $3,453,953 |
| 6000 | | --Update RD/RA Work Plan | $118,638 | $6,371 | $25,230 | 20.18% | $150,239 |
| 7000 | | --Bid & Award for Phase I Remediation | $14,708 | $790 | $0 | 0.00% | $15,498 |
| 8000 | | --Mobilization | $11,697 | $628 | $0 | 0.00% | $12,325 |
| 9000 | | --Phase I Excavation, Reroute Utilities | $154,645 | $8,304 | $51,594 | 31.66% | $214,543 |
| **9001** | | **----GENERAL CONDITIONS** | **$52,567** | **$2,823** | **$17,538** | **31.66%** | **$72,927** |
| **9002.2.01** | | **----Excavation** | **$50,898** | **$2,733** | **$16,981** | **31.66%** | **$70,612** |
| **9003** | | **----CONCRETE** | **$18,102** | **$972** | **$6,039** | **31.66%** | **$25,113** |
| 9003.01 | | ------Precast Lid | $5,657 | $304 | $1,887 | 31.66% | $7,848 |
| 9003.02 | | ------Ductbank Concrete | $12,294 | $660 | $4,101 | 31.66% | $17,055 |
| 9003.03 | | ------Pad at Well | $151 | $8 | $51 | 31.66% | $210 |
| **9015** | | **----MECHANICAL** | **$7,443** | **$400** | **$2,483** | **31.66%** | **$10,326** |
| 9015.01 | | ------Process Piping | $7,443 | $400 | $2,483 | 31.66% | $10,326 |
| **9016** | | **----ELECTRICAL** | **$25,635** | **$1,377** | **$8,553** | **31.66%** | **$35,564** |
| 9016.01 | | ------Raceways | $12,093 | $649 | $4,035 | 31.66% | $16,777 |
| 9016.02 | | ------Cable, Wire & Devices | $12,192 | $655 | $4,068 | 31.66% | $16,914 |
| 9016.03 | | ------Panelboards | $1,350 | $72 | $450 | 31.66% | $1,873 |
| 9100 | | --Remove Tank, Contents, and Ancilliary Equipment | $235,078 | $12,624 | $73,902 | 29.84% | $321,605 |
| **9102.1** | | **----Demolition** | **$235,078** | **$12,624** | **$73,902** | **29.84%** | **$321,605** |
| 9102.1.01 | | ------Erect & Remove Containment (GFE) Tent | $11,409 | $613 | $3,587 | 29.84% | $15,609 |
| 9102.1.02 | | ------Saw Cut Lid | $5,067 | $272 | $1,593 | 29.84% | $6,932 |
| 9102.1.03 | | ------Dispose of Lid | $4,787 | $257 | $1,505 | 29.84% | $6,549 |
| 9102.1.04 | | ------Dispose of Duct Bank and Asphalt | $1,843 | $99 | $579 | 29.84% | $2,522 |
| 9102.1.10 | | ------Fix Contamination in Vault | $2,961 | $159 | $931 | 29.84% | $4,051 |
| 9102.1.11 | | ------Demo Pipes in Vault | $9,749 | $524 | $3,065 | 29.84% | $13,338 |

# Project Summary Report

Project Name: ***INTEC SP 6/ WAG 3 Projects/Group 7/Work Package 1-RD/RA WP***

Project Location: ***INTEC SFE-20***
Estimate Number: ***2977-Ia***

Client: ***L. Davison***
Prepared By: ***J. Folker/J. Grenz***
Estimate Type: ***Project Support***

| Level | Group | Description | Estimate Subtotal | Escalation | Contingency | Contingency % | TOTAL |
|---|---|---|---|---|---|---|---|
| 9102.1.12 | | ------Remove Tank | $14,800 | $795 | $4,653 | 29.84% | $20,247 |
| 9102.1.13 | | ------Demo Pipes in Tunnel | $16,330 | $877 | $5,134 | 29.84% | $22,341 |
| 9102.1.14 | | ------Demo Pipes in Pump Pit | $36,409 | $1,955 | $11,446 | 29.84% | $49,811 |
| 9102.1.15 | | ------Demo Pipes in Excavation | $6,531 | $351 | $2,053 | 29.84% | $8,935 |
| 9102.1.16 | | ------Demo Pipes and Compressor in 642 | $25,191 | $1,353 | $7,919 | 29.84% | $34,463 |
| 9102.1.17 | | ------Allowance for Higher than Expected Rad Fields | $72,000 | $3,866 | $22,635 | 29.84% | $98,501 |
| 9102.1.18 | | ------Sample Pipes, Soils, Misc Debris | $20,000 | $1,074 | $6,287 | 29.84% | $27,361 |
| 9102.1.19 | | ------Boxes for Contaminated Waste | $8,000 | $430 | $2,515 | 29.84% | $10,945 |
| 9200 | | --Sample SFE-20 Tank | $238,282 | $0 | $0 | 0.00% | $238,282 |
| **9200.1** | | **----PROJECT DEVELOPMENT** | **$238,282** | **$0** | **$0** | **0.00%** | **$238,282** |
| 9200.1.1 | | ------WORK CONTROLS & REVIEWS | $24,317 | $0 | $0 | 0.00% | $24,317 |
| 9200.1.1.1 | | --------Work Planning | $24,317 | $0 | $0 | 0.00% | $24,317 |
| 9200.1.2 | | ------MOCK-UP & TOOLS | $29,674 | $0 | $0 | 0.00% | $29,674 |
| 9200.1.2.1 | | --------Const Mock-up | $18,093 | $0 | $0 | 0.00% | $18,093 |
| 9200.1.2.2 | | --------Fab Remote Tools | $11,581 | $0 | $0 | 0.00% | $11,581 |
| 9200.1.3 | | ------CONTAINMENT DESIGN & FABRICATION | $12,447 | $0 | $0 | 0.00% | $12,447 |
| 9200.1.3.1 | | --------Design Containment and Air Flows | $5,315 | $0 | $0 | 0.00% | $5,315 |
| 9200.1.3.2 | | --------Fab Containment Tent | $7,133 | $0 | $0 | 0.00% | $7,133 |
| 9200.1.4 | | ------REMOVE FLANGE & SAMPLE | $167,077 | $0 | $0 | 0.00% | $167,077 |
| 9200.1.4.1 | | --------Open Tank & Take Sample | $23,577 | $0 | $0 | 0.00% | $23,577 |
| 9200.1.4.2 | | --------Sample Cost | $143,500 | $0 | $0 | 0.00% | $143,500 |
| 9200.1.5 | | ------CLEAN-UP & DEMOB | $4,768 | $0 | $0 | 0.00% | $4,768 |
| 9200.1.5.1 | | --------Remove Tent and Clean-up | $4,768 | $0 | $0 | 0.00% | $4,768 |
| 9300 | | --Backfill and Regrade | $23,442 | $1,259 | $2,240 | 9.07% | $26,941 |
| **9302.2.02** | | **----Backfill** | **$22,379** | **$1,202** | **$2,138** | **9.07%** | **$25,719** |
| **9302.2.03** | | **----Pavement** | **$1,064** | **$57** | **$102** | **9.07%** | **$1,222** |

# Project Summary Report

Project Name: *INTEC SP 6/ WAG 3 Projects/Group 7/Work Package 1-RD/RA WP*

Project Location: *INTEC SFE-20*
Estimate Number: *2977-la*

Client: *L. Davison*
Prepared By: *J. Folker/J. Grenz*
Estimate Type: *Project Support*

| Level | Group | Description | Estimate Subtotal | Escalation | Contingency | Contingency % | TOTAL |
|---|---|---|---|---|---|---|---|
| 9400 | | --Treat and Dispose of Tank and Contents | $885,066 | $167,012 | $292,344 | 27.79% | $1,344,422 |
| 9500 | | --Demobilization | $7,798 | $632 | $0 | 0.00% | $8,430 |
| 9600 | | --Finalize RCRA Closure Report | $8,567 | $695 | $0 | 0.00% | $9,262 |
| 9800 | | --Project Management | $702,736 | $37,737 | $67,144 | 9.07% | $807,617 |
| 9900 | | --Construction Management | $265,208 | $14,242 | $25,340 | 9.07% | $304,790 |
| 1000 | | Phase II, Project Closeout | $1,603,024 | $348,177 | $290,541 | 14.89% | $2,241,742 |
| 10000 | | --Bid & Award for Phase II Remediation | $14,708 | $3,195 | $0 | 0.00% | $17,902 |
| 11000 | | --Mobilization | $18,900 | $4,105 | $0 | 0.00% | $23,005 |
| 12000 | | --Phase II Excavation & Disposal to ICDF | $309,388 | $67,199 | $143,745 | 38.17% | $520,332 |
| 12910 | | ----GENERAL CONDITIONS | $57,772 | $12,548 | $26,841 | 38.17% | $97,161 |
| 12920 | | ----Excavation | $251,616 | $54,651 | $116,904 | 38.17% | $423,171 |
| 12920.01 | | -------Drill Master Pile Holes | $23,571 | $5,120 | $10,951 | 38.17% | $39,642 |
| 12920.02 | | -------Drive and Extract Piling | $162,718 | $35,342 | $75,601 | 38.17% | $273,661 |
| 12920.03 | | -------Ex for Tie-Back Wall | $4,600 | $999 | $2,137 | 38.17% | $7,737 |
| 12920.04 | | -------Excavation Inside Shoring | $60,727 | $13,190 | $28,215 | 38.17% | $102,132 |
| 13000 | | --Remove Vault and Other Structures to ICDF | $182,848 | $39,715 | $29,295 | 13.16% | $251,857 |
| 13910.11 | | ----Demo CPP-642 | $17,822 | $3,871 | $2,855 | 13.16% | $24,548 |
| 13910.12 | | ----Demo Pump Pit | $35,644 | $7,742 | $5,711 | 13.16% | $49,097 |
| 13910.13 | | ----Demo Pipe Corridor | $35,644 | $7,742 | $5,711 | 13.16% | $49,097 |
| 13910.14 | | ----Demo Tk Vault & Tunnel | $44,555 | $9,677 | $7,138 | 13.16% | $61,371 |
| 13910.15 | | ----Demo Pipes in Excavation | $5,690 | $1,236 | $912 | 13.16% | $7,837 |
| 13910.16 | | ----Demo Pipe in Buildings | $11,379 | $2,472 | $1,823 | 13.16% | $15,674 |
| 13910.17 | | ----Demo Electrical in Buildings | $14,290 | $3,104 | $2,290 | 13.16% | $19,684 |
| 13910.18 | | ----Demo Tie-Back Wall | $17,822 | $3,871 | $2,855 | 13.16% | $24,548 |

## Project Summary Report

Project Name: *INTEC SP 6/ WAG 3 Projects/Group 7/Work Package 1-RD/RA WP*

Project Location: *INTEC SFE-20*
Estimate Number: *2977-la*

Client: *L. Davison*
Prepared By: *J. Folker/J. Grenz*
Estimate Type: *Project Support*

| Level | Group | Description | Estimate Subtotal | Escalation | Contingency | Contingency % | TOTAL |
|---|---|---|---|---|---|---|---|
| 14000 | | --Complete Phase II Excavation & Disposal to ICDF | $24,823 | $5,392 | $2,740 | 9.07% | $32,954 |
| 14910.01 | | ----Tie-Back Wall | $23,137 | $5,025 | $2,554 | 9.07% | $30,716 |
| 14910.01 | | ----CMU Wall | $1,686 | $366 | $186 | 9.07% | $2,238 |
| 15000 | | --Backfill and Regrade | $43,831 | $9,520 | $4,838 | 9.07% | $58,188 |
| 15910.05 | | ----Backfill | $42,767 | $9,289 | $4,720 | 9.07% | $56,776 |
| 15910.06 | | ----Pavement | $1,064 | $231 | $117 | 9.07% | $1,412 |
| 16000 | | --Demobilization | $12,600 | $2,737 | $0 | 0.00% | $15,337 |
| 17000 | | --Group 7 Closeout Activities | $64,798 | $14,074 | $7,152 | 9.07% | $86,024 |
| 18000 | | --Project Management | $640,477 | $139,112 | $70,692 | 9.07% | $850,280 |
| 19000 | | --Construction Management | $290,652 | $63,130 | $32,080 | 9.07% | $385,862 |
| Total | Work Package-WAG 3/Group 7 RD/RA Work Plan | | $4,268,889 | $598,470 | $828,336 | 17.02% | $5,695,695 |

# Appendix C

# Prefinal Inspection Checklists

# Appendix C

## Draft Phase I Prefinal Checklist

| **Inspection Items** | | Incomplete | Complete | |
|---|---|---|---|---|
| **Item** | **RD/RA Section** | | | **Comments/Corrective Actions** |
| Review the analytical data on the excavated soil to confirm it can be used for backfilling. | 4.1.2 | | | |
| Compare actual lines capped or sealed versus those anticipated in the original job scope. | 4.1.1 | | | |
| Verify that the Phase I electrical modifications have been installed and are functional. | 4.1.1 | | | |
| Review any change in scope orders to determine if there are significant impacts to the work plan. | 6.1 | | | |
| Confirm that any tank/vault/line wastes have been sampled and sent for analysis. | 4.1.3.4, 4.1.3.7 | | | |
| Verify proper placement of the new concrete vault cover. | 4.1.4 | | | |

# Inspection Items

| Item | RD/RA Section | Incomplete | Complete | Comments/Corrective Actions |
|---|---|---|---|---|
| Verify status of any accumulated waste generated during the Phase I work:<br>- Is this waste being properly managed?<br>- Are all waste tracking records available?<br>- Verify that any off-site facility planned for treatment/disposal has an acceptability determination in accordance with 40 CFR 300.440. | WMP – Section 3 | | | |
| Verify that equipment used to complete the Phase I remediation has been decontaminated or, if decontamination is not possible, removed to the SSSTF Contaminated Equipment Pad. | 6.10 | | | |
| Verify that the Phase I excavation has been backfilled and graded in a manner to minimize the potential for subsidence and provide adequate drainage. | 6.3.4.13 | | | |

| **Additional Comments**: | Concurrence | Date |
|---|---|---|
| | US EPA: | |
| | IDEQ: | |
| | DOE-ID: | |
| | BBWI: | |

# Draft Phase II Prefinal Checklist

| **Inspection Items** | | Incomplete | Complete | |
|---|---|---|---|---|
| **Item** | **RD/RA Section** | | | **Comments/Corrective Actions** |
| Visual verification completed to confirm removal of the above-ground structures. Review remediation information and available photographs to verify removal of the below-ground tank system. | 4.1.4, 4.2.3, 4.2.4 | | | |
| Contaminated soil in excess of the OU 3-13 remedial action objectives that extends beyond the shoring edge has been documented/recorded for future remediation as part of the OU 3-13 Group 3, Remedial Action. Verify update of the Institutional Control Plan and signage to identify this contamination. Verify that a New Site ID Form has been prepared for contaminated soils in excess of RBCs which result from releases from the SFE-20 tank system, but which extend outside of the shoring boundary. | 4.2.5 | | | |
| Review the analytical data on the excavated soil to confirm it can be used for backfilling, and that all soils that pose an unacceptable risk to the SRPA have been excavated and properly managed. | FSP – Section 5.7 | | | |
| Compare actual lines capped or sealed versus those anticipated in the original job scope. | 4.2.2 | | | |
| Verify that the Phase II electrical modifications (new devices and duct banks) are installed and functional. | 4.2.2 | | | |
| Review any change in scope orders to determine if there are significant impacts to the work plan. | 6.1 | | | |

# Inspection Items

| Item | RD/RA Section | Incomplete | Complete | Comments/Corrective Actions |
|---|---|---|---|---|
| Verify that excavation has been backfilled and graded in a manner to minimize the potential for subsidence and provide adequate drainage. | 4.2.5 | | | |
| Tank and waste not amenable to on-Site treatment/disposal are being managed in appropriate on-Site storage areas, or have been transported to an appropriate off-Site facility. Verify any off-Site facility used has an acceptability determination in accordance with 40 CFR 300.440. | 6.3.3.4<br>6.10 | | | |
| Verify that equipment used to complete the remediation has been decontaminated or, if decontamination is not possible, removed to the SSSTF Contaminated Equipment Pad for re-use or eventual disposal. | 6.3.6.1 | | | |
| Any spills and releases that may have occurred during the course of the project were properly reported and have been appropriately cleaned up. | HASP Section 10 | | | |

**Additional Comments**:

| Concurrence | Date |
|---|---|
| US EPA: | |
| IDEQ: | |
| DOE-ID: | |
| BBWI: | |

# Appendix D

# Responses to Comments

# Responses to EPA Comments

# Draft RD/RAWP VES-SFE-20 Hot Waste Tank System Comments – Resolutions to Draft Final Document Review, Comment, Resolution List – EPA

| DOCUMENT TITLE: Remedial Design/Remedial Action Work Plan for the VES-SFE-20 Hot Waste Tank System (Draft Final) | | | | |
|---|---|---|---|---|
| Item | Section/ Figure/ Appendix | Page | Comment/Issue | Resolution |
| 1. | General | | Issue: Solid waste is also subject to the Off Site Rule. Industrial waste containing CERCLA hazardous substances at concentrations that may result in an unacceptable risk must be evaluated in terms of their suitability for disposal at on INEEL facilities like the CFA and the RWMC.<br><br>Comment: Suggested language: Industrial waste (IW) is solid waste that is neither radioactive nor hazardous. IW streams at the INEEL are typically disposed at the INEEL Landfill Complex. Many CERCLA IWs are typically generated in the AOC as a result of material used in a remediation project that the generator believes have not become contaminated with either radioactive or hazardous materials. This lack of contamination is validated through the use of radiation surveys or visual inspections. A general hazardous waste determination is prepared for routinely generated IW to document that the waste is neither radioactive nor hazardous waste.<br><br>IW waste streams that have a higher probability of containing constituents restricted from disposal are considered non-routine and will undergo a waste stream-specific HWD. This is accomplished by sampling, performing radioactive surveys, using process knowledge of the IW waste generating process (e.g. was the waste mixed with a listed waste or derived from the treatment, storage, or disposal of a listed waste?), and evaluating the composition of the IW waste. | No document revision. The suggested wording is already in the document. Please see Section 4.4, paragraphs 3 and 4 of the Waste Management Plan for the suggested wording. In addition, Section 5.4, paragraph 4 has wording that acknowledges that CERCLA wastes shipped off-site must meet the applicable requirements of the off-site rule (40 CFR 300.440). |

# Responses to IDEQ Comments

# Draft RD/RAWP for the VES-SFE-20 Hot Waste Tank System Comments — Resolutions to Draft Final Document Review, Comment, Resolution List – IDEQ

| DOCUMENT TITLE: Remedial Design/Remedial Action Work Plan for the VES-SFE-20 Hot Waste Tank System (Draft Final) | | | | |
|---|---|---|---|---|
| Item | Section/ Figure/ Appendix | Page | Comment/Issue | Resolution |
| 1. | General | | The DEQ acknowledges that the Phase II remediation schedule is linked to the HWMA closure of the SFE -106 tank system, for which there is currently no DEQ approved closure schedule. As discussed in the June 2003 Quarterly meeting, the DOE needs to establish a closure date for SFE 106 that incorporates the dates of the Phase II work schedule as submitted in the project schedule section 6.6. This will provide for the enforceable milestones needed in the RD/RA Workplan. | Document revision. Section 3.3, pg. 3-6, 6th bullet will be revised as follows, "Phase II remediation activities are planned to commence following the closure of VES-SFE-106. If the closure of VES-SFE-106 has not been completed prior to starting the Phase II remediation activities, the remedial design will be modified accordingly to allow the Phase II activities to be completed in accordance with the schedule in the finalized RD/RA WP." |
| 2. | Section 6.6 Project Schedule, Table 6-1 | 6-12 | Clarify why the dates provided in Table 6-1 for the Phase I prefinal inspection are different from the dates given in the response to IDEQ comments in the draft document review Question #25.<br><br>The current RD/RA Workplan document list:<br><br>Phase I Prefinal Inspection target date – **2/23/06**<br><br>Phase II Prefinal Inspection target date - 11/24/09<br><br>The response to IDEO comment #25 list:<br><br>Phase I Prefinal Inspection target date – **9/30/05**<br><br>Phase II Prefinal Inspection target date - 11/24/09 | No document revision. The date provided to IDEQ in the comment response table for the Phase I Prefinal Inspection target date was an inadvertent error. The correct date of 2/23/06 is reflected in Table 6-1 of the RD/RA Work Plan. |

# Draft RD/RAWP for the VES-SFE-20 Hot Waste Tank System Comments — Resolutions to Draft Final Document Review, Comment, Resolution List – IDEQ

| DOCUMENT TITLE: Remedial Design/Remedial Action Work Plan for the VES-SFE-20 Hot Waste Tank System (Draft Final) | | | | |
|---|---|---|---|---|
| Item | Section/ Figure/ Appendix | Page | Comment/Issue | Resolution |
| 3. | Section 6.6 | 6-12 | An enforceable milestone date for Phase II is required. | Document change.<br>(a) The Project Schedule shown in Appendix A was changed.<br>(b) Table 6-1 in Section 6.6 will be changed to include an enforceable milestone date of 2/29/12 for "Submit Draft Remedial Action Report". |
| 4. | DOE/ID 11049, Section 5.3, Storage and Inspection | 14 | Section 5.3 appears to discuss only staging of wastes in accordance with the substantive requirements of 40 CFR 264.554. Therefore, please replace the "*Storage*" in the section title with "*Staging*." Storage and staging are not equivalent regulatory terms. If storage areas are needed to implement the remedy, these units should also be described in the Waste Management Plan. | Document revision. The title of Section 5.3 is changed to read "5.3 Staging and Inspection". |
| 5. | DOE/ID 11049, Section 5.3 Storage and Inspection, First paragraph, Third sentence | 14 | Clarify what is meant by staging of the waste (piles or containers) "in proximity" to the remediation site. Discussions during the draft comment resolution indicated that the staging area would be marked on a drawing. The area depicted on drawing T-1 identifies only a general area for soil management; subcontractor lay down, decontamination, and monitoring/sampling. The location where each of these activities will be performed must be clearly identified in the final RD/RA Work Plan (Waste Management Plan). | Document revision.<br>(a) Section 5.3 (WMP), 1st paragraph, 3rd sentence shall be revised as follows: "If waste is staged prior to treatment and disposal, the waste will be staged in the designated area depicted in the RD/RA Work Plan Figure 6-1."<br>(b) Figure 6-1 (RD/RA Work Plan) will be revised, see figure below. |

# Draft RD/RAWP for the VES-SFE-20 Hot Waste Tank System Comments — Resolutions to Draft Final Document Review, Comment, Resolution List – IDEQ

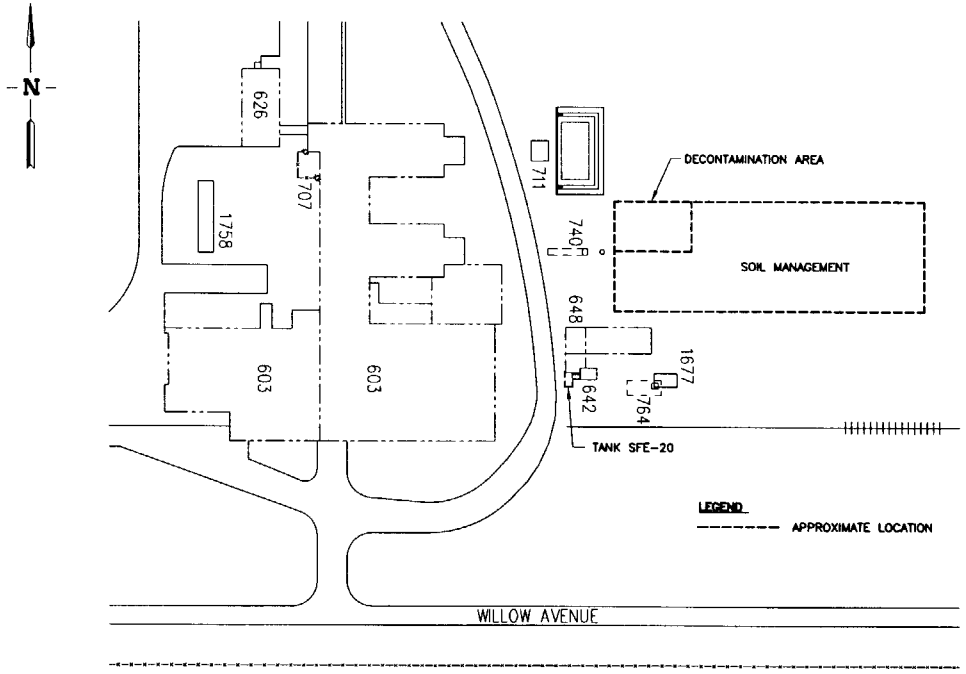


ENLARGED VIEW

**Attachment 1**
**Phase I Drawings**

# Attachment 1

## Construction Drawings-VES-SFE-20 Hot Waste Tank Remedial Design – Phase I

## Drawings 624407 through 624434

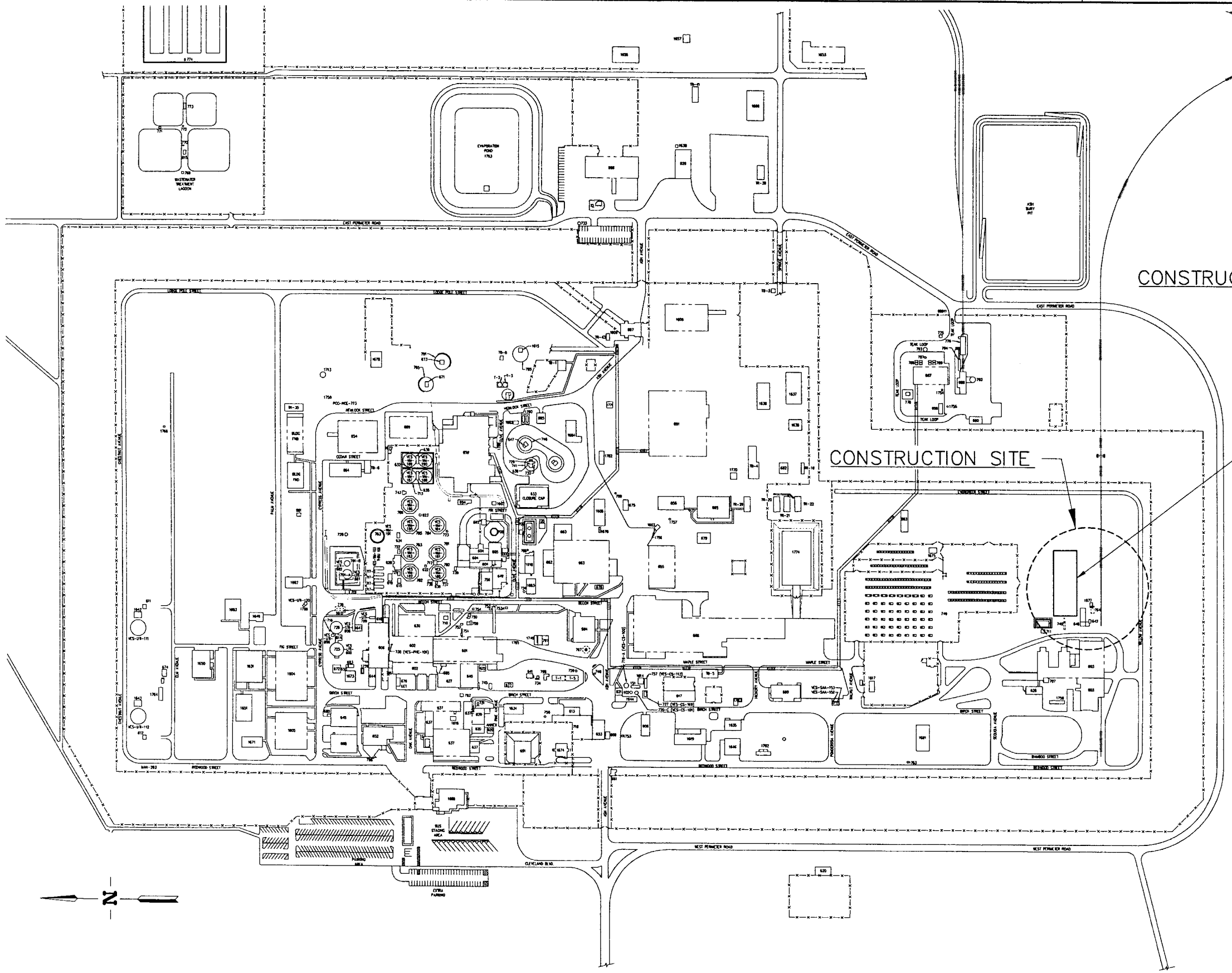


INTEC AREA MAP

SCALE: 1"=200.0'
BASED ON SITE SPECIFIC DATUM

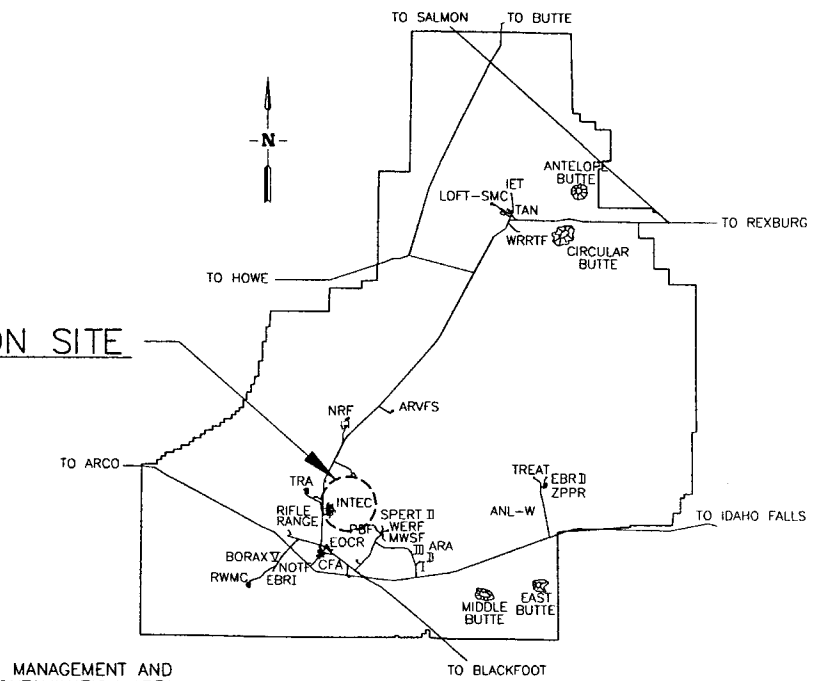


INEEL SITE MAP

SCALE: NONE

## DRAWING INDEX

| PAGE NO. | DWG NO. | A-E DWG NO. | REV | DRAWING TITLE |
|---|---|---|---|---|
| 1 | 624407 | T-1 | | SITE AND AREA MAPS AND DRAWING INDEX |
| 2 | 624408 | T-2 | | LEGEND, ABBREVIATIONS AND GENERAL NOTES |
| 3 | 624409 | C-1 | | EXCAVATION PLAN AND ESTIMATED QUANTITIES |
| 4 | 624410 | C-2 | | PLAN AND PROFILE |
| 5 | 624411 | C-3 | | PLAN AND PROFILE |
| 6 | 624412 | C-4 | | DEMOLTION PLAN AND SECTIONS |
| 7 | 624413 | C-5 | | DETAILS AND SECTION |
| 8 | 624414 | C-6 | | VESSEL VES-SFE-20 ELEVATION AND VIEW |
| 9 | 624415 | S-1 | | TANK VAULT ROOF – DEMOLITION |
| 10 | 624416 | S-2 | | TANK VAULT ROOF, SECTION AND DETAILS |
| 11 | 624417 | S-3 | | TANK RIGGING AND LIFTING DETAILS |
| 12 | 624418 | S-4 | | NEW PRECAST VAULT ROOF AND DETAILS |
| 13 | 624419 | S-5 | | FIXATIVE VAULT SECTION |
| 14 | 624420 | P-1 | | PIPING PLOT PLAN |
| 15 | 624421 | P-2 | | P&ID |
| 16 | 624422 | P-3 | | PLANS, SECTION AND DETAIL |
| 17 | 624423 | P-4 | | SECTION |
| 18 | 624424 | P-5 | | PHOTOS |
| 19 | 624425 | V-1 | | GFE TENT PLAN AND VIEWS |
| 20 | 624426 | E-1 | | ELECTRICAL PLAN – DEMOLITION |
| 21 | 624427 | E-2 | | ELECTRICAL PLAN – INSTALLATION |
| 22 | 624428 | E-3 | | EXISTING AND NEW ONE LINE DIAGRAM |
| 23 | 624429 | E-4 | | CPP-648 PLAN AND PHOTOS – DEMOLITION |
| 24 | 624430 | E-5 | | CPP-648 PLAN AND DETAIL – INSTALLATION |
| 25 | 624431 | E-6 | | CPP-764 AND 1677 FLOOR PLANS – DEMOLITION |
| 26 | 624432 | E-7 | | CPP-764 AND 1677 FLOOR PLANS – INSTALLATION |
| 27 | 624433 | E-8 | | CPP-603 ELECTRICAL FLOOR PLAN AND VIEW |
| 28 | 624434 | E-9 | | DETAILS AND CABLE SCHEDULE |

| REVISIONS | | |
|---|---|---|
| REV | DESCRIPTION | EFFECTIVE DATE: |

FOR DRAWING INDEX SEE DRAWING NO. 624407

200' 100' 50' 0 200'
SCALE: 1" = 200.0'

DESIGN PHASE: AFC
SAFETY CATEGORY: CG

SUBCONTRACT NO.
REQUESTER: K ROGERS
DESIGN: K FRITZ
DRAWN: J MONCUR
PROJECT NO. 23052
SPEC CODE
FOR REVIEW/APPROVAL SIGNATURES SEE DAR NO. 102658
EFFECTIVE DATE: 6-26-03

INEEL
Idaho National Engineering & Environmental Laboratory
BECHTEL BWXT IDAHO, LLC

INEEL
OU 3-13 GROUP 7
VES-SFE-20 HOT WASTE TANK REMEDIAL DESIGN
PHASE I
SITE AND AREA MAPS AND DRAWING INDEX

SIZE D | CAGE CODE 01MF3 | INDEX CODE NUMBER: AREA 200, TYPE 0100, CL 01, ORIG 090 | DWG-624407 | REV
SCALE: NOTED | SHEET T-1

FMT-01-REV 3.3
File: 624407.dwg
Path: X:\VES-SFE-20 Hot Waste Tank Remedial Design\Working Dwgs\PH I
Layout Name: Layout1
ID: MXJ

FMT-D1-REV 3.2

| REVISIONS | | |
|---|---|---|
| REV | DESCRIPTION | EFFECTIVE DATE: |

## SYMBOL KEY

- A / A-1 — SECTION LETTER / A/E SHEET REFERENCE
- A / A-1 — VIEW OR ELEVATION LETTER / A/E SHEET REFERENCE
- 1 — DETAIL NUMBER / SAME SHEET REFERENCE
- 6"WGN-106108 — EXISTING UNDERGROUND UTITILIES, SEE NOTE 15
- EXISTING ELECTRICAL OR TELEPHONE DUCT BANK
- EXISTING FIRE HYDRANT
- EXISTING PIV
- EXISTING GATE VALVE
- EXISTING POWER OR LIGHT POLE
- EXISTING ROADWAYS
- EXISTING BUILDINGS
- EXISTING SIDEWALKS
- MAH-XX-XX-XXX — EXISTING MANHOLE NUMBER
- SPECIAL PURPOSE RECEPTACLE
- DISCONNECT SWITCH
- TRANSFORMER

## MATERIALS

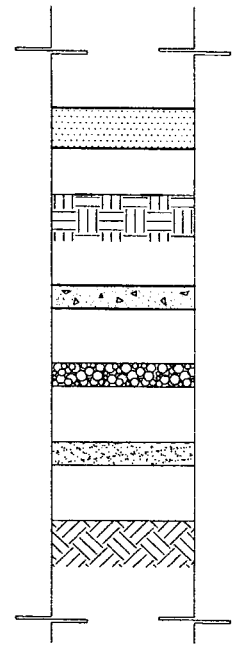

- ASPHALT PAVEMENT
- COMPACTED FILL
- CONCRETE
- GRANULAR FILL
- SAND
- UNDISTURBED EARTH

## GENERAL NOTES

1. EXISTING UTILITY LINES REFERENCED IN THIS PACKAGE ARE BASED ON CURRENT "AS BUILT" UNDERGROUND UTILITIES AS SHOWN ON DRAWING.
2. RETAIN AND PROTECT ALL EXISTING FACILITIES UNLESS OTHERWISE NOTED.
3. SEE "SUMMARY OF WORK" SPECIFICATION FOR ANTICIPATED SEQUENCE OF OPERATIONS.
4. CUT AND SPLICE ALL CATHODIC AND ELECTRICAL CABLES IN ACCORDANCE WITH SPECIFICATIONS 16120.
5. LOCATION AND ELEVATION SHOWN FOR EXISTING UTILITIES ARE APPROXIMATE. SUBCONTRACTOR SHALL HAND EXCAVATE TO FIELD LOCATE INTERFERENCES AND PREVENT ANY DAMAGE DURING EXCAVATION IN ACCORDANCE WITH THE SRM.
6. LOCATOR RIBBON DISTURBED DURING EXCAVATION OVER EXISTING UTILITIES IS TO BE REPLACED DURING BACKFILL AND COMPACTION. ALL NEW UTILITIES ARE TO BE MARKED WITH LOCATOR RIBBON PER SPECIFICATION.
7. FOR ESTIMATING PURPOSES, REMOVAL AND SAW CUTTING OF ALL ASPHALT CONCRETE SURFACES ARE ASSUMED TO BE AN AVERAGE OF 4" THICK.
8. PRIOR TO BACKFILLING, ALL EXPOSED UNDERGROUND UTILITIES ARE TO BE LOCATED BY HORIZONTAL COORDINATES AND VERTICAL ELEVATION BASED ON INTEC SITE SPECIFIC HORIZONTAL AND VERTICAL DATUM.
9. SUBCONTRACTOR SHALL REINSTALL ALL SIGNS REMOVED DURING CONSTRUCTION AT OR NEAR THE ORIGINAL POSITION AFTER CONSTRUCTION IS COMPLETE.
10. TEMPORARY TRAFFIC CONTROL SIGNS, BARRICADES, FLAGGING ETC. MAY BE REQUIRED TO PROPERLY CONTROL TRAFFIC DURING CONSTRUCTION. ALL SIGNING AND TRAFFIC CONTROL OPERATIONS SHALL COMPLY WITH THE CURRENT "MANUAL ON UNIFORM TRAFFIC CONTROL DEVICES".
11. ALL EXCAVATED MATERIAL SHALL BE MANAGED PER THE SPECIAL CONDITIONS.
12. HORIZONTAL AND VERTICAL COORDINATES ARE INTEC SITE SPECIFIC. SURVEY CONTROL POINT INFORMATION WILL BE FURNISHED UPON REQUEST.
13. EXISTING UTILITIES ARE SHOWN AND IDENTIFIED FOR INFORMATION ONLY. SPECIFIC LINE TYPE IDENTIFICATION WILL BE FURNISHED UPON REQUEST.

## ABBREVIATIONS

| | |
|---|---|
| BGS | BELOW GROUND SURFACE |
| BLDG | BUILDING |
| BOP | BOTTOM OF PIPE |
| ℄ | CENTERLINE |
| C | CONDUIT |
| CLR | CLEAR (COVER OVER REBAR) |
| CS | CARBON STEEL |
| CONC | CONCRETE |
| CONT | CONTINUOUS |
| CO | CLEAN OUT |
| COMM | COMMUNICATIONS DUCT BANK |
| CT | CONDENSATE |
| CTR | CENTER |
| CY | CUBIC YARD |
| DB | DUCT BANK |
| DIA ø | DIAMETER |
| DIP | DUCTILE IRON PIPE |
| DWG | DRAWING |
| EA | EACH |
| EF | EACH FACE |
| EL | ELEVATION |
| EQ SP | EQUALLY SPACED |
| EW | EACH WAY |
| EXIST. | EXISTING |
| FH | FIRE HYDRANT |
| FIN. GRD | FINISHED GRADE |
| FO | FIBER OPTIC CABLE |
| FT | FOOT/FEET |
| FW | FIRE WATER |
| HA | HIGH PRESSURE AIR |
| HH | HANDHOLE |
| HS | HIGH PRESSURE STEAM |
| HYD | HYDRANT |
| HORIZ | HORIZONTAL |
| ID | INSIDE DIAMETER |
| LC | LOAD CENTER |
| LF | LINEAR FOOT |
| LG | LENGTH OR LONG |
| MAH | MANHOLE |
| MATL | MATERIAL |
| MAX | MAXIMUM |
| MFR | MANUFACTURER |
| MIN | MINIMUM |
| NA | NITRIC ACID |
| NO. | NUMBER |
| OC | ON CENTER |
| OD | OUTSIDE DIAMETER |
| PC | POINT OF CURVE |
| PIV | POST INDICATOR VALVE |
| PL | PROCESS WASTE, LOW LEVEL |
| PLCS | PLACES |
| PT | POINT OF TANGENT |
| PVC | POLYVINYLCHLORIDE |
| R | RADIUS |
| RC | REINFORCED CONCRETE |
| REF | REFERENCE |
| REQD | REQUIRED |
| REV | REVISION |
| RGS | RIGID GALVANIZED STEEL |
| RP | REFERENCE POINT |
| SEC | SECTION |
| SH | SHEET |
| SPEC | SPECIFICATON |
| SRM | SUBCONTRACTOR REQUIREMENT MANUAL |
| STA | STATION |
| STD | STANDARD |
| SW | SERVICE WASTE |
| THK | THICK |
| TOC | TOP OF CONCRETE |
| TOS | TOP OF STEEL |
| TYP | TYPICAL |
| UN | UNLESS NOTED OTHERWISE |
| VERT | VERTICAL |
| WQ | SANITARY SEWER |
| X-REF | EXTERNAL REFERENCE DRAWING |

| | | |
|---|---|---|
| FOR DRAWING INDEX SEE DRAWING NO. 624407 | SUBCONTRACT NO. | INEEL — Idaho National Engineering & Environmental Laboratory — BECHTEL BWXT IDAHO, LLC |
| NO SCALE | REQUESTER: K ROGERS<br>DESIGN: KURT FRITZ<br>DRAWN: J MONCUR<br>PROJECT NO. 23052<br>SPEC CODE | INEEL<br>OU 3-13 GROUP 7<br>VES-SFE-20 HOT WASTE TANK REMEDIAL DESIGN<br>PHASE I<br>LEGEND, ABBREVIATIONS AND GENERAL NOTES |
| DESIGN PHASE: AFC | FOR REVIEW/APPROVAL SIGNATURES SEE DAR NO. 102658 | SIZE: D; CAGE CODE; INDEX CODE NUMBER: AREA 200, TYPE 9999, CL 01, ORIG 090; DWG-624408; REV |
| QUALITY LEVEL: CG | EFFECTIVE DATE: 6-26-03 | SCALE: NONE; SHEET T-2 |

File: 624408.dwg ID: MKJ Drawn in Model Space
Path: X:\VES-SFE-20 Hot Waste Tank\Designs\Wd0dwg\PDWCS\PH I

| REVISIONS | | |
|---|---|---|
| REV | DESCRIPTION | EFFECTIVE DATE: |

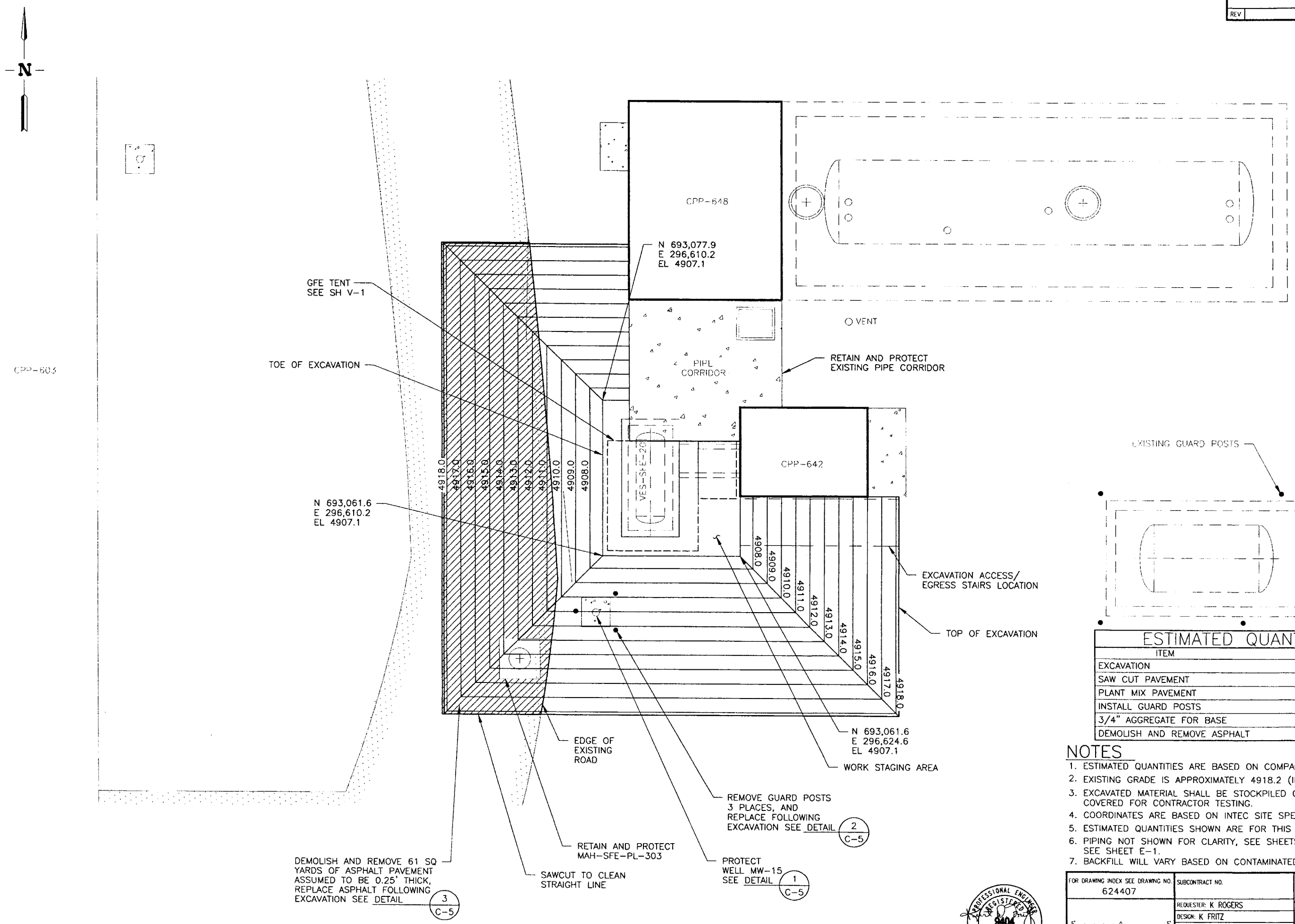


## EXCAVATION PLAN

SCALE 1"=5.0'

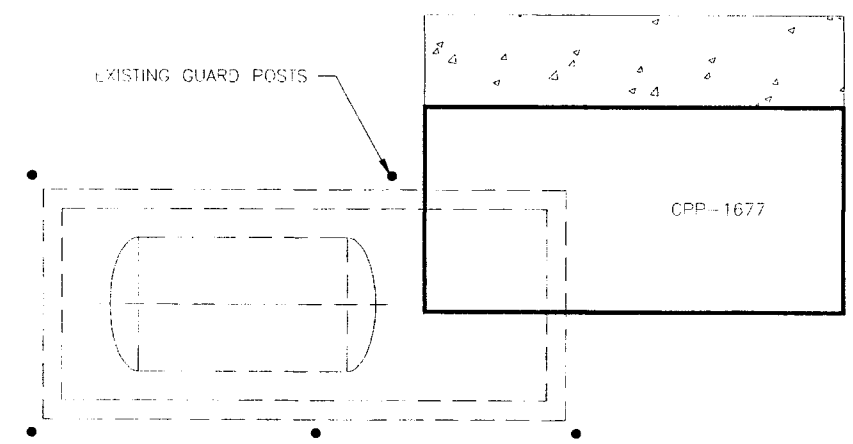


## ESTIMATED QUANTITIES

| ITEM | UNIT | QTY |
|---|---|---|
| EXCAVATION | CY | 355 |
| SAW CUT PAVEMENT | LF | 75 |
| PLANT MIX PAVEMENT | TONS | 10.5 |
| INSTALL GUARD POSTS | EA | 3 |
| 3/4" AGGREGATE FOR BASE | CY | 10.5 |
| DEMOLISH AND REMOVE ASPHALT | SY | 61 |

## NOTES

1. ESTIMATED QUANTITIES ARE BASED ON COMPACTED IN-PLACE MATERIALS.
2. EXISTING GRADE IS APPROXIMATELY 4918.2 (INTEC SITE SPECIFIC DATUM).
3. EXCAVATED MATERIAL SHALL BE STOCKPILED ON LINERS AND SECURELY COVERED FOR CONTRACTOR TESTING.
4. COORDINATES ARE BASED ON INTEC SITE SPECIFIC DATUM.
5. ESTIMATED QUANTITIES SHOWN ARE FOR THIS SHEET ONLY.
6. PIPING NOT SHOWN FOR CLARITY, SEE SHEETS P-1, AND P-3. FOR ELECTRICAL SEE SHEET E-1.
7. BACKFILL WILL VARY BASED ON CONTAMINATED SOIL ENCOUNTERED.

PROFESSIONAL ENGINEER REGISTERED 9404 STATE OF IDAHO KURT D. FRITZ 6/26/03

| | | |
|---|---|---|
| FOR DRAWING INDEX SEE DRAWING NO. 624407 | SUBCONTRACT NO. | INEEL (Idaho National Engineering & Environmental Laboratory) BECHTEL BWXT IDAHO, LLC |
| 5' 4' 3' 2' 1' 0 5' SCALE: 1" = 5.0' | REQUESTER: K ROGERS<br>DESIGN: K FRITZ<br>DRAWN: J MONCUR<br>PROJECT NO. 23052<br>SPEC CODE | INEEL<br>OU 3-13 GROUP 7<br>VES-SFE-20 HOT WASTE TANK REMEDIAL DESIGN<br>PHASE I<br>EXCAVATION PLAN AND ESTIMATED QUANTITIES |
| DESIGN PHASE: AFC | FOR REVIEW/APPROVAL SIGNATURES SEE DAR NO. 102658 | SIZE D; CAGE CODE 01MF3; INDEX CODE NUMBER AREA 200 TYPE 0100 Q 02 ORIG 090; DWG- 624409; REV |
| SAFETY CATEGORY: CG | EFFECTIVE DATE: 6-26-03 | SCALE: NOTED; SHEET C-1 |

File: 624409.dwg
Path: X:\VES-SFE-20 Hot Waste Tank Demo\DBF\Dwgs\W9XX8g.PENCS\PH 1
Layout Name: Layout1 ID: MXJ

| REVISIONS | | |
|---|---|---|
| REV | DESCRIPTION | EFFECTIVE DATE: |

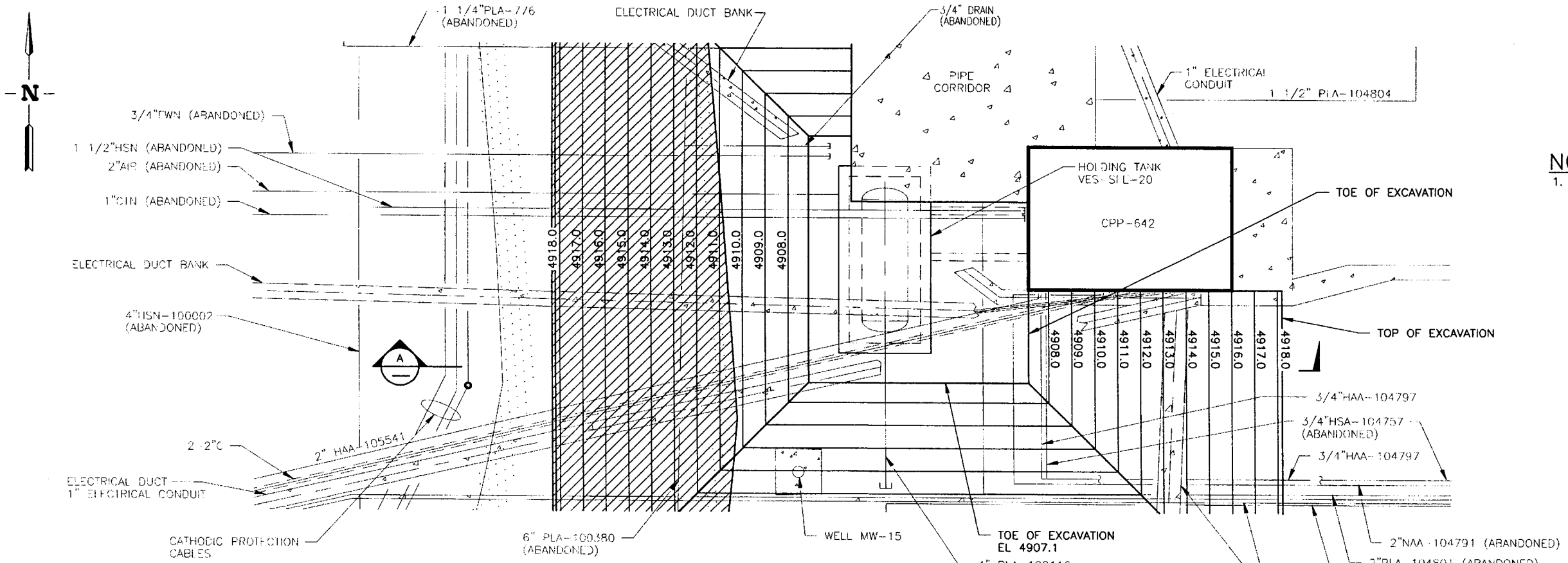


## EXCAVATION PLAN

SCALE 1"=4.0'

## NOTES

1. UTILITIES ON THIS DRAWING ARE SHOWN FOR REFERENCE ONLY. FOR REMOVAL OF EXISTING PIPING AND ELECTRICAL SEE SH P-1, P-3, AND E-1.

PROFESSIONAL ENGINEER REGISTERED 9404 STATE OF IDAHO KURT D. FRITZ

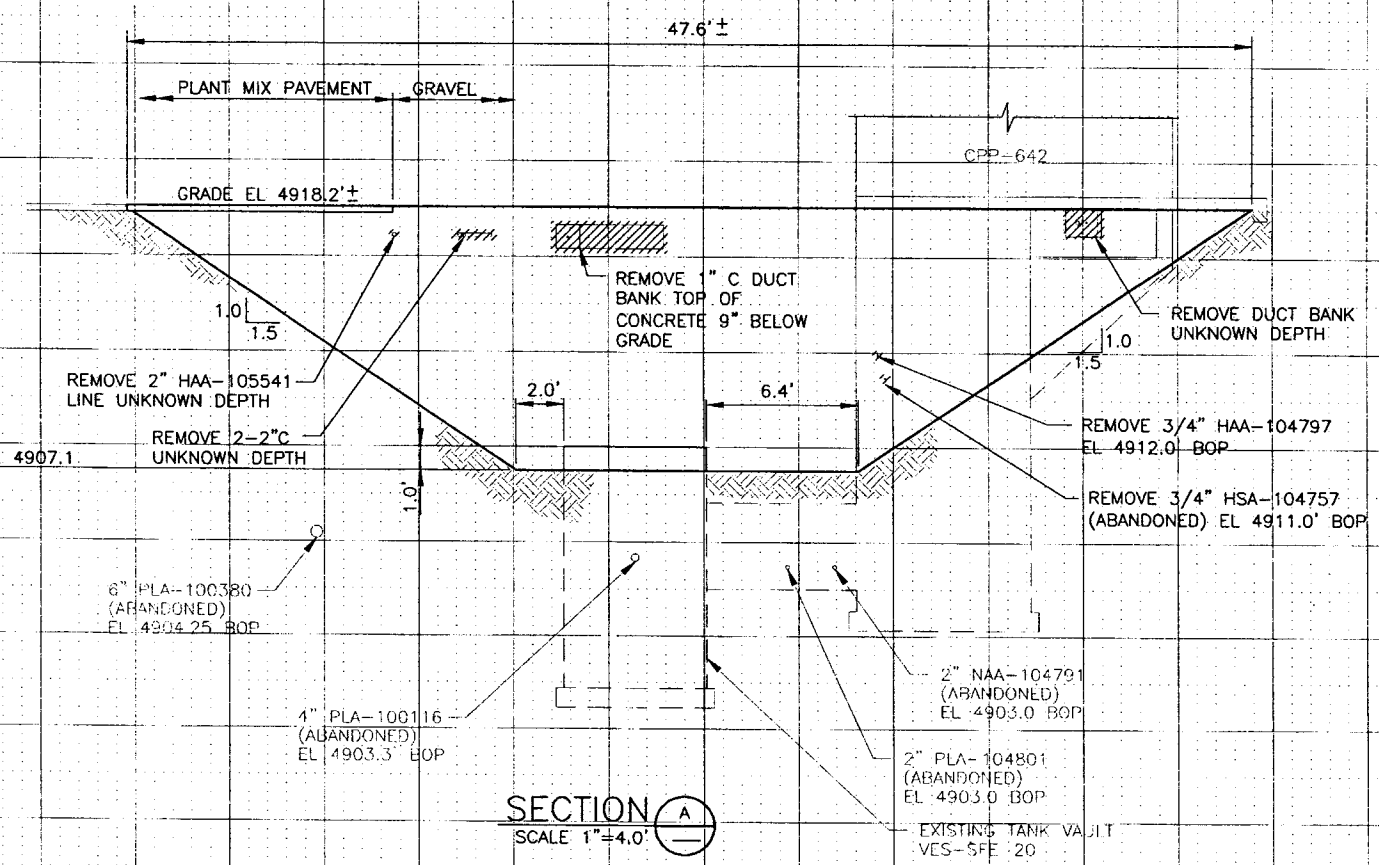


## SECTION A

SCALE 1"=4.0'

FOR DRAWING INDEX SEE DRAWING NO. 624407

SCALE: 1" = 4.0'

| | |
|---|---|
| HORIZONTAL SCALE | 1"=4.0' |
| VERTICAL SCALE | 1"=4.0' |
| DESIGN PHASE: | AFC |
| SAFETY CATEGORY: | CG |

INEEL — Lockheed Martin Engineering & Environmental Services — LMES

INEEL
OU 3-13 GROUP 7
VES-SFE-20 HOT WASTE TANK REMEDIAL DESIGN
PHASE I
PLAN AND PROFILE

| SIZE | CAGE CODE | INDEX CODE NUMBER | | | DWG- | REV |
|---|---|---|---|---|---|---|
| D | 01MF3 | AREA 200 | SYSTEM 01 | SEQ 090 | 624410 | |

SHEET C-2

SCALE: SEE HORIZONTAL & VERTICAL

| | |
|---|---|
| SUBCONTRACT NO. | |
| REQUESTER: K ROGERS | |
| DESIGN: K FRITZ | |
| DRAWN: J MONCUR | |
| PROJECT NO. | 23052 |
| SPEC CODE | |
| FOR REVIEW/APPROVAL SIGNATURES SEE DAR NO. 102658 | |
| EFFECTIVE DATE: | 6-26-03 |

File: 624410.dwg
Path: X:\VES-SFE-20 Hot Waste Tank Remedial Design\Dwgs\PM03\PH 1
Layout Name: Layout1
ID: MKJ

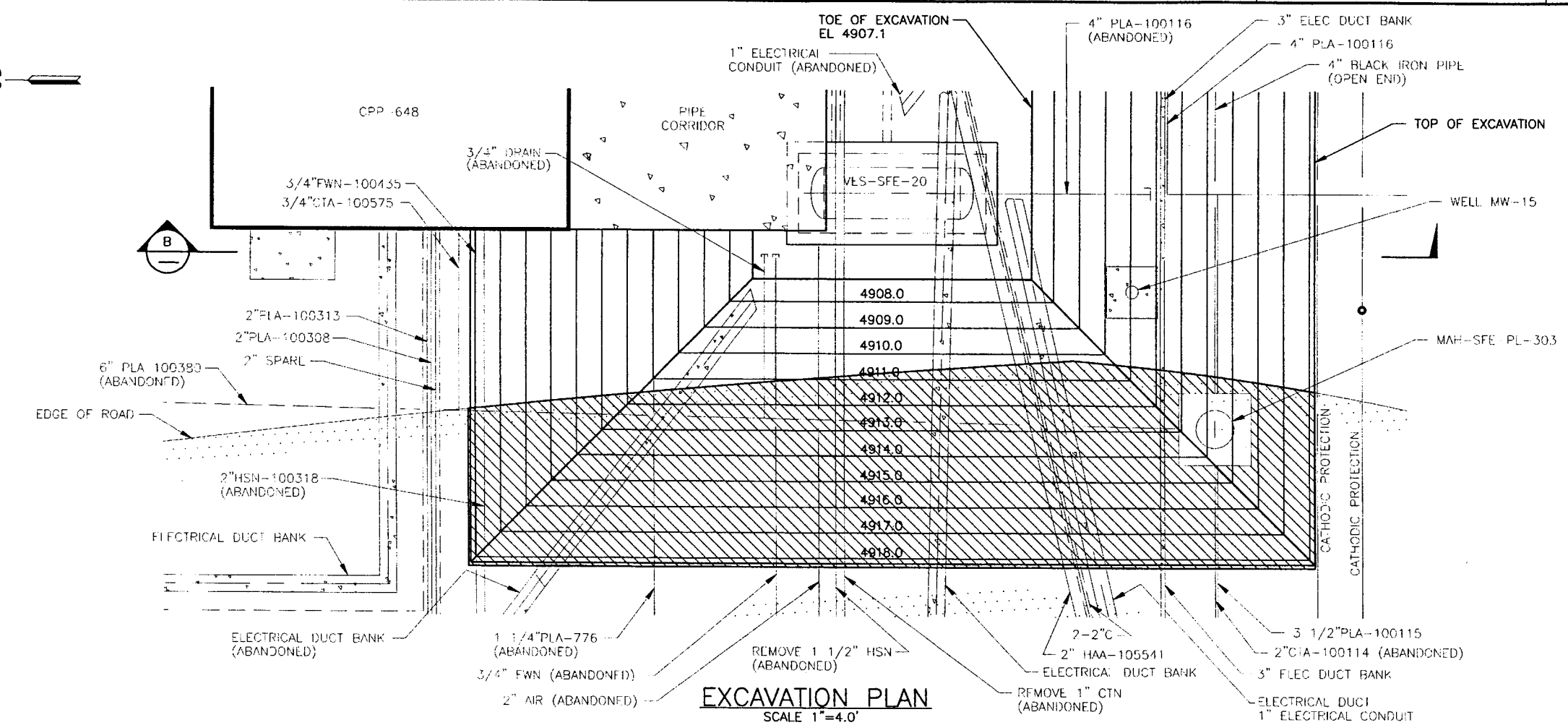


EXCAVATION PLAN
SCALE 1"=4.0'

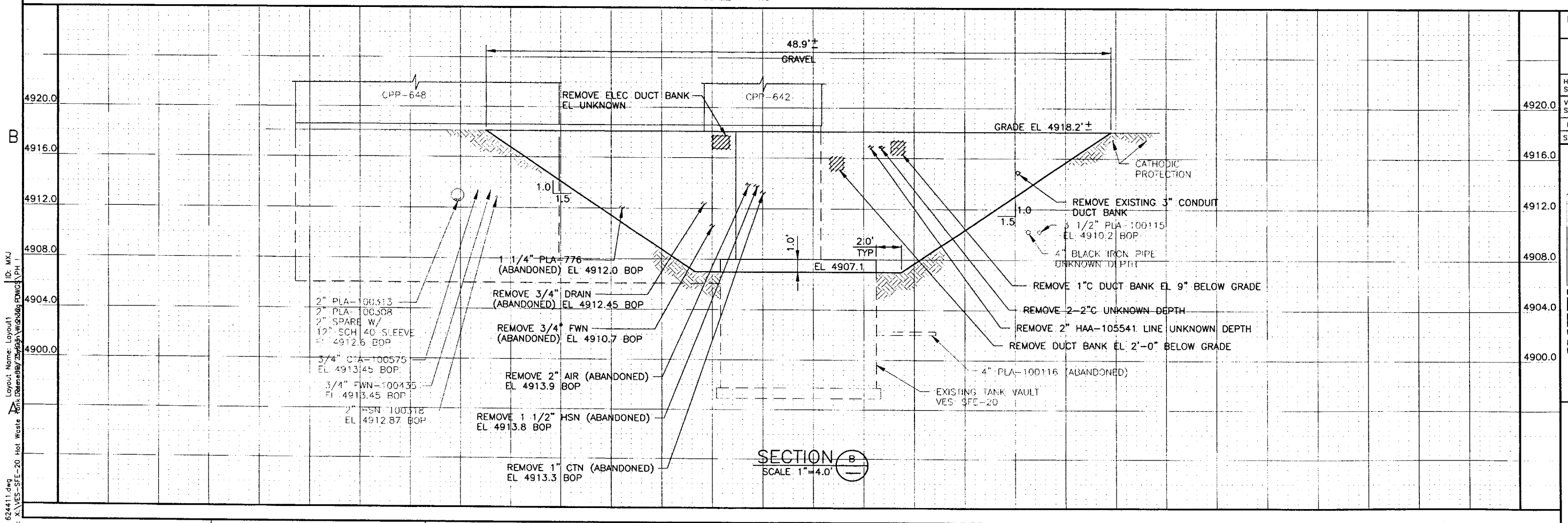


SECTION B
SCALE 1"=4.0'

## NOTES

1. UTILITIES ON THIS DRAWING ARE SHOWN FOR REFERENCE ONLY. FOR REMOVAL OF EXISTING PIPING AND ELECTRICAL SEE SH P-1, P-3, AND E-1.

| REVISIONS | | |
|---|---|---|
| REV | DESCRIPTION | EFFECTIVE DATE: |

PROFESSIONAL ENGINEER REGISTERED 9404 6/26/03 STATE OF IDAHO KURT D. FRITZ

FOR DRAWING INDEX SEE DRAWING NO. 624407

SCALE: 1" = 4.0'

| | |
|---|---|
| HORIZONTAL SCALE | 1"=4.0' |
| VERTICAL SCALE | 1"=4.0' |
| DESIGN PHASE: | AFC |
| SAFETY CATEGORY: | CG |

INEEL
Idaho National Engineering & Environmental Laboratory
BECHTEL BWXT IDAHO, LLC

INEEL
OU 3-13 GROUP 7
VES-SFE-20 HOT WASTE TANK REMEDIAL DESIGN
PHASE I
PLAN AND PROFILE

| SIZE | CAGE CODE | INDEX CODE NUMBER AREA | TYPE | CL | ORIG | DWG- 624411 | REV |
|---|---|---|---|---|---|---|---|
| D | 01MF3 | 200 | 0100 | 02 | 090 | SHEET C-3 | |

SCALE: SEE HORIZONTAL & VERTICAL

SUBCONTRACT NO.
REQUESTER: K ROGERS
DESIGN: KURT FRITZ
DRAWN: J MONCUR
PROJECT NO. 23052
SPEC CODE
FOR REVIEW/APPROVAL SIGNATURES SEE DAR NO. 102658
EFFECTIVE DATE: 6-26-03

File: 624411.dwg
Path: X:\VES-SFE-20 Hot Waste Tank Remedial Design\Working Dwgs\PH I
Layout Name: Layout1
ID: MXJ

| REVISIONS | | |
|---|---|---|
| REV | DESCRIPTION | EFFECTIVE DATE: |

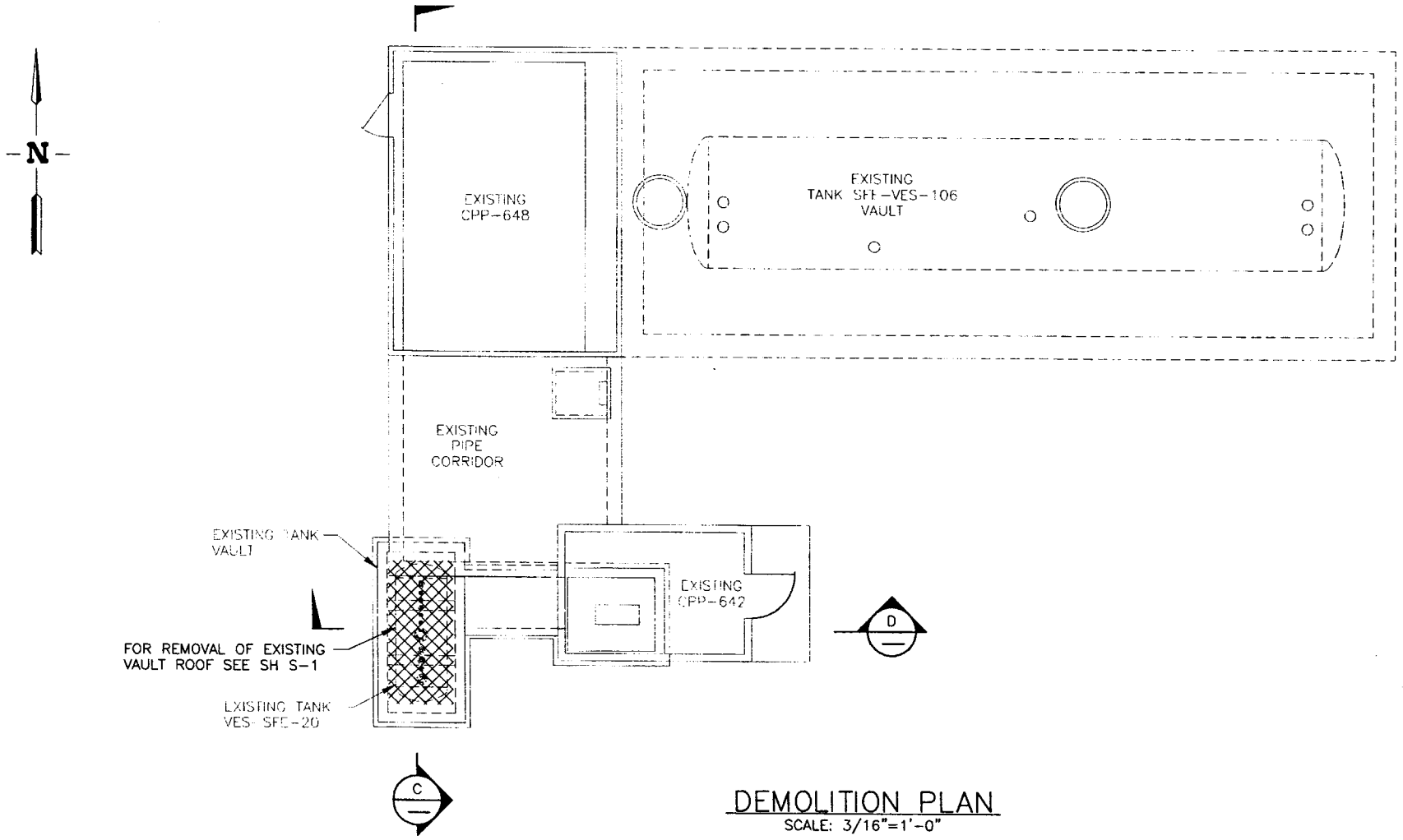


## DEMOLITION PLAN
SCALE: 3/16"=1'-0"

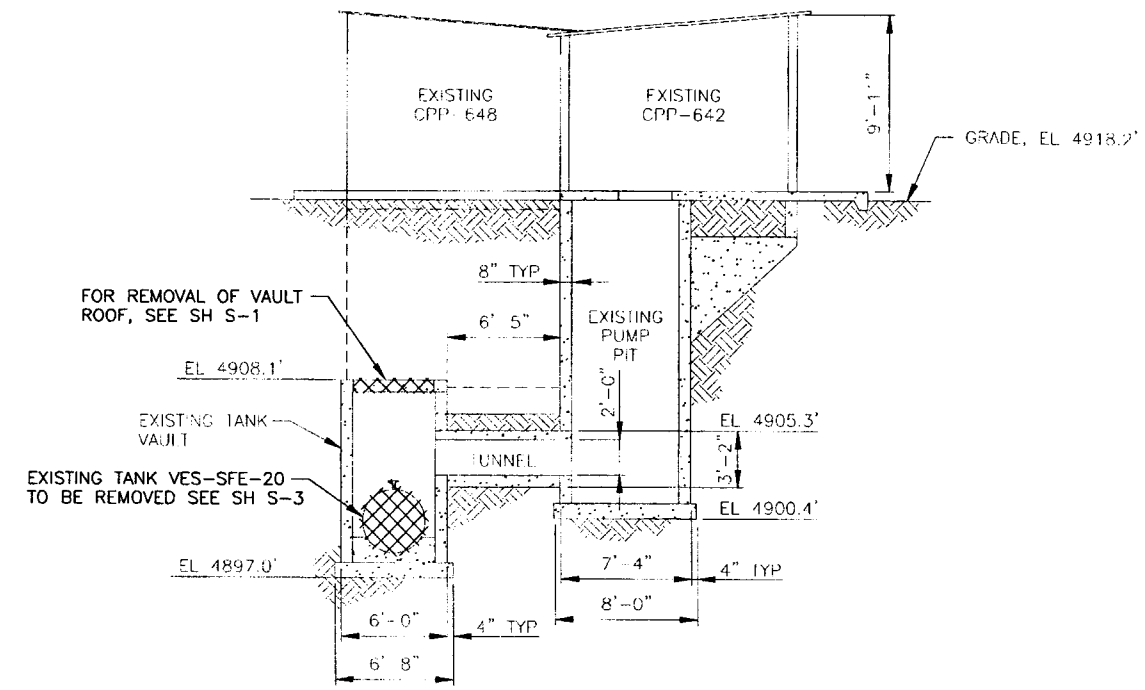


## SECTION (D)
SCALE: 3/16"=1'-0"

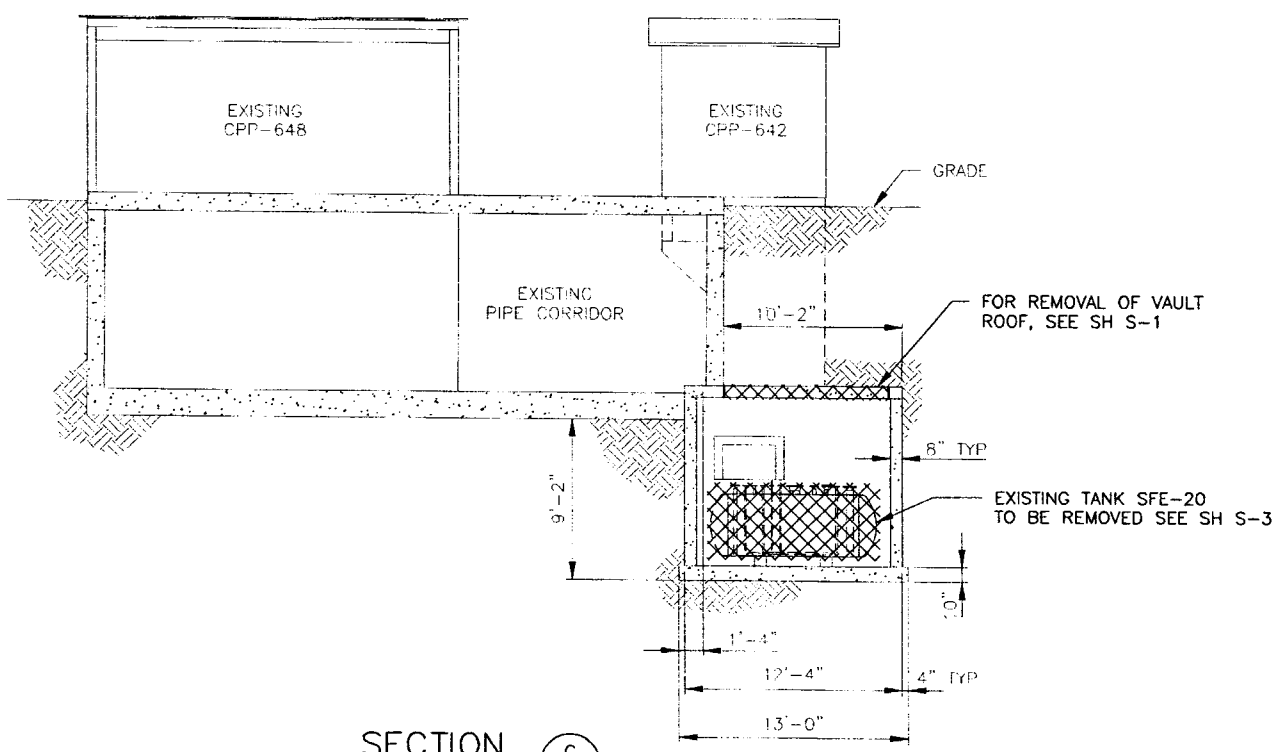


## SECTION (C)
SCALE: 3/16"=1'-0"

## NOTES

1. ALL DIMENSIONS ARE REFERENCE ONLY. FIELD VERIFY DIMENSIONS.
2. PIPING INSIDE CPP-642 STRUCTURE NOT SHOWN FOR CLARITY SEE SHEET P-2 AND P-3.

PROFESSIONAL ENGINEER REGISTERED 8404 6/26/03 STATE OF IDAHO KURT D. FRITZ

| INDEX CODE NUMBER | | | |
|---|---|---|---|
| AREA | TYPE | CL | ORIG |
| 200 | 0642 | 53 | 090 |
| INDEX CODE NUMBER | | | |
| AREA | TYPE | CL | ORIG |
| 200 | 0642 | 60 | 090 |

FOR DRAWING INDEX SEE DRAWING NO. 624407

1' 0 1' 2' 3' 4' 5' 10'
SCALE: 3/16" = 1'-0"

DESIGN PHASE: AFC
SAFETY CATEGORY: CG

SUBCONTRACT NO.
REQUESTER: K ROGERS
DESIGN: K FRITZ
DRAWN: J MONCUR
PROJECT NO. 23052
SPEC CODE
FOR REVIEW/APPROVAL SIGNATURES SEE DAR NO. 102658
EFFECTIVE DATE: 6-26-03

INEEL
Idaho National Engineering & Environmental Laboratory
BECHTEL BWXT IDAHO, LLC

INEEL
OU 3-13 GROUP 7
VES-SFE-20 HOT WASTE TANK REMEDIAL DESIGN
PHASE I
DEMOLTION PLAN AND SECTIONS

| SIZE | CAGE CODE | INDEX CODE NUMBER | | | | DWG- | REV |
|---|---|---|---|---|---|---|---|
| | | AREA | TYPE | CL | ORIG | | |
| D | 01MF3 | 200 | 0642 | 02 | 090 | 624412 | |

SCALE: NOTED
SHEET C-4

File: 624412.dwg
Path: X:\VES-SFE-20 Hot Waste Tank Remedial Design\DWGS\PH I
Layout Name: D Size
Plotted By: Kurt Fritz
ID: MKJ

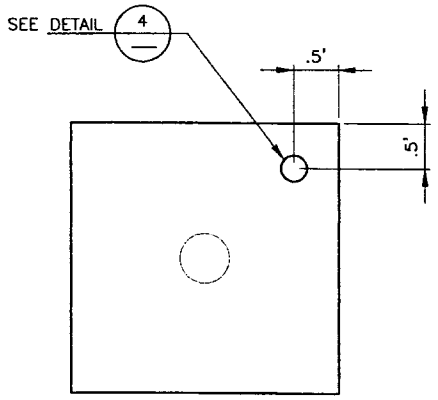


PLAN

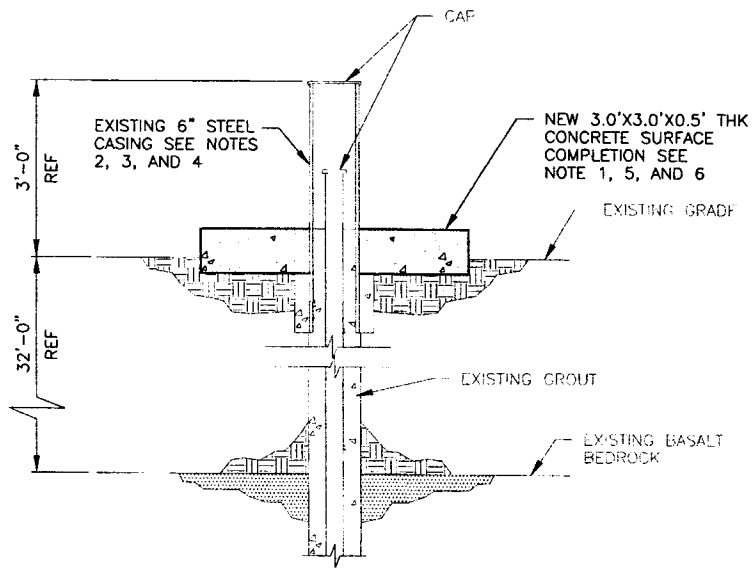


EXISTING WELL MW-15

DETAIL 1 C-1
SCALE: 1"=1'-0"

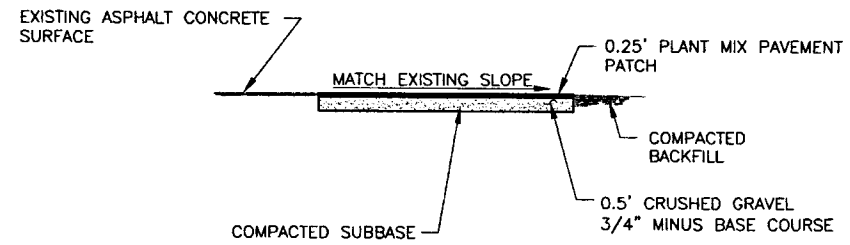


SECTION E
NTS

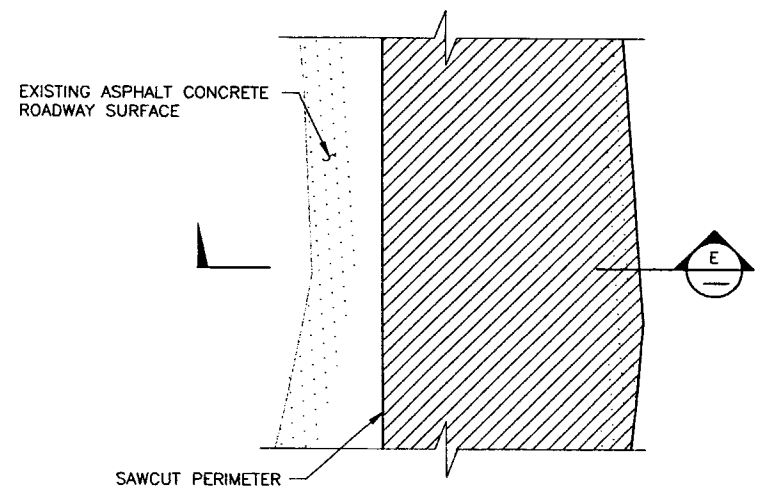


TYPICAL PAVEMENT DEMOLITION AND REPAIR

DETAIL 3 C-1
NTS

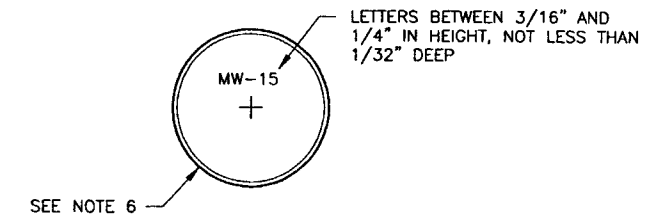


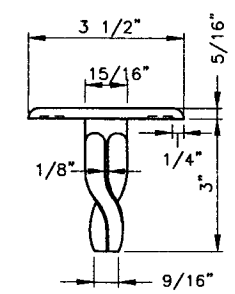


DETAIL 4
NTS

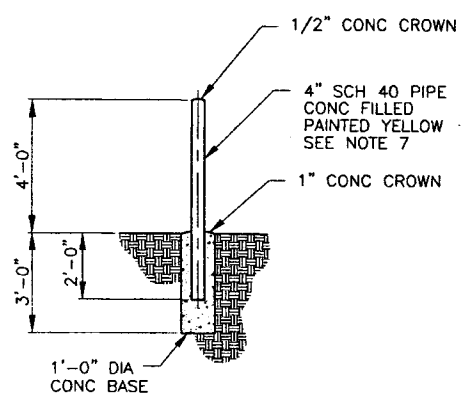


DETAIL 2 C-1
SCALE: 1/2"=1'-0"

## NOTES

1. REMOVE EXISTING 3.0' X 3.0' CONCRETE SURFACE COMPLETION PRIOR TO EXCAVATION.
2. RETAIN AND PROTECT AND SUPPORT 6" STEEL CASING DURING EXCAVATION.
3. PLACE TEMPORARY STEEL CASING OR CULVERT AROUND 6" CASING PRIOR TO BACK FILLING. FIELD VERIFY SIZE REQUIRED.
4. FILL SPACE BETWEEN 6" CASING AND TEMPORARY CASING WITH BENTONITE WELL SEAL PRIOR TO REMOVING TEMPORARY CASING.
5. NEW CONCRETE SURFACE COMPLETION SHALL BE 4000 PSI CONCRETE.
6. MARKER SHALL BE CAST IN ONE PIECE WITH BRASS CAP IN PLACE.
7. FILL PIPE WITH 4000 PSI CONCRETE.

PROFESSIONAL ENGINEER REGISTERED 9404 6/26/03 STATE OF IDAHO KURT D. FRITZ

| | | |
|---|---|---|
| FOR DRAWING INDEX SEE DRAWING NO. 624407 | SUBCONTRACT NO. | INEEL Idaho National Engineering & Environmental Laboratory BECHTEL BWXT IDAHO, LLC |
| SCALE: 3/16" = 1'-0" | REQUESTER: K ROGERS<br>DESIGN: K FRITZ<br>DRAWN: J MONCUR<br>PROJECT NO. 23052<br>SPEC CODE | INEEL<br>OU 3-13 GROUP 7<br>VES-SFE-20 HOT WASTE TANK REMEDIAL DESIGN<br>PHASE I<br>DETAILS AND SECTION |
| DESIGN PHASE: AFC | FOR REVIEW/APPROVAL SIGNATURES SEE DAR NO. 102658 | SIZE D · CAGE CODE 01MF3 · INDEX CODE NUMBER AREA 200 TYPE 0100 CL 02 ORIG 090 · DWG-624413 · REV |
| SAFETY CATEGORY: CG | EFFECTIVE DATE: 6-26-03 | SCALE: NOTED · SHEET C-5 |

File: 624413.dwg
Path: X:\VES-SFE-20 Hot Waste Tank Dataset\Design\WorkMg PDWGS\PH 1
Layout Name: D Size
ID: MXJ

| REVISIONS | | |
|---|---|---|
| REV | DESCRIPTION | EFFECTIVE DATE: |

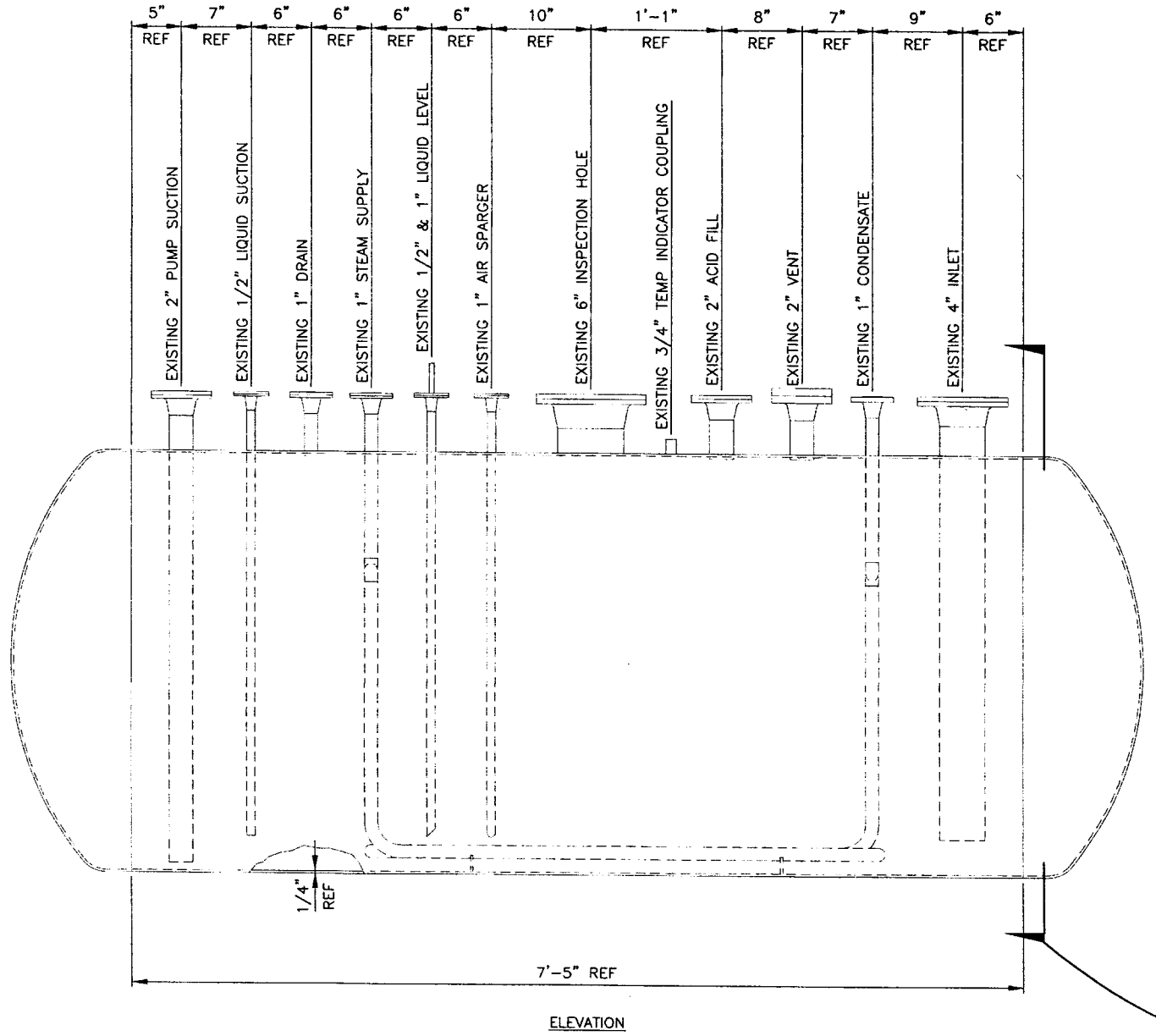


ELEVATION

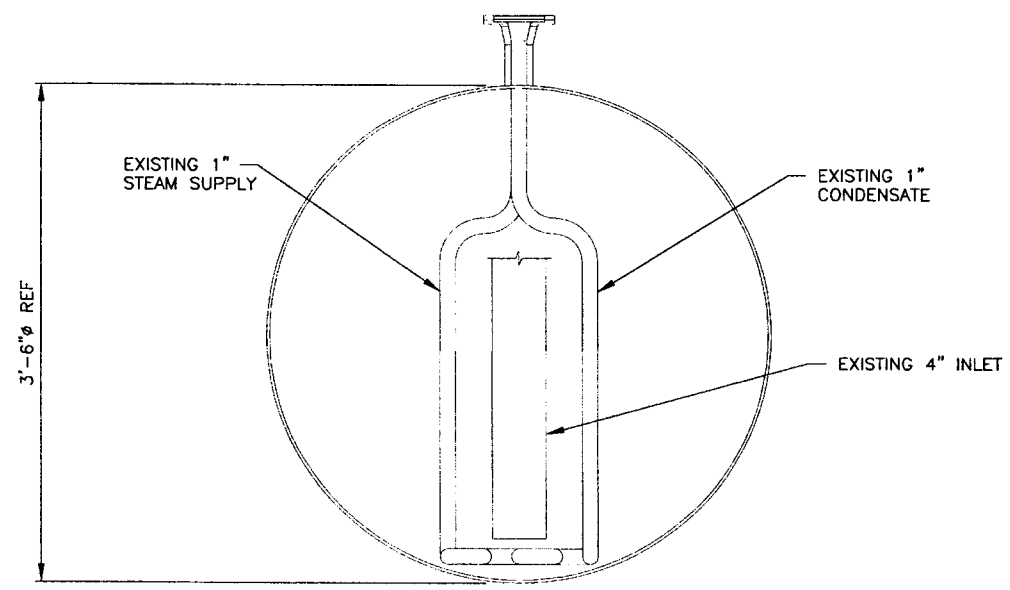


SECTION

## EXISTING VESSEL VES-SFE-20

SCALE: 1 1/2"=1'-0"

REFERENCE ONLY

## NOTES

1. FOR DETAILS ON LIFTING OF TANK SEE SH S-3.

PROFESSIONAL ENGINEER REGISTERED 9404 6/26/03 STATE OF IDAHO KURT D. FRITZ

| INDEX CODE NUMBER | | | |
|---|---|---|---|
| AREA | TYPE | CL | ORIG. |
| 200 | 0642 | 53 | 090 |

| | |
|---|---|
| FOR DRAWING INDEX SEE DRAWING NO. 624407 | |
| SCALE: 1 1/2" = 1'-0" | |
| DESIGN PHASE: | AFC |
| SAFETY CATEGORY: | CG |
| SUBCONTRACT NO. | |
| REQUESTER: K ROGERS | |
| DESIGN: K FRITZ | |
| DRAWN: J MONCUR | |
| PROJECT NO. | 23052 |
| SPEC CODE | |
| FOR REVIEW/APPROVAL SIGNATURES SEE DAR NO. 102658 | |
| EFFECTIVE DATE: | 6-26-03 |

INEEL — Idaho National Engineering & Environmental Laboratory — BECHTEL BWXT IDAHO, LLC

INEEL
OU 3-13 GROUP 7
VES-SFE-20 HOT WASTE TANK REMEDIAL DESIGN
PHASE I
VESSEL VES-SFE-20 ELEVATION AND VIEW

| SIZE | CAGE CODE | INDEX CODE NUMBER | | | | DWG- | REV |
|---|---|---|---|---|---|---|---|
| | | AREA | TYPE | CL | ORIG | | |
| D | 01MF3 | 200 | 0642 | 02 | 090 | 624414 | |

SCALE: NOTED — SHEET C-6

File: 624414.dwg
Path: K:\VES-SFE-20 Hot Waste Tank Remediation\Dwgs\Wdrs\dwg PDMICS\PH I
Layout Name: D Size
ID: MXJ

| REVISIONS | | |
|---|---|---|
| REV | DESCRIPTION | EFFECTIVE DATE: |

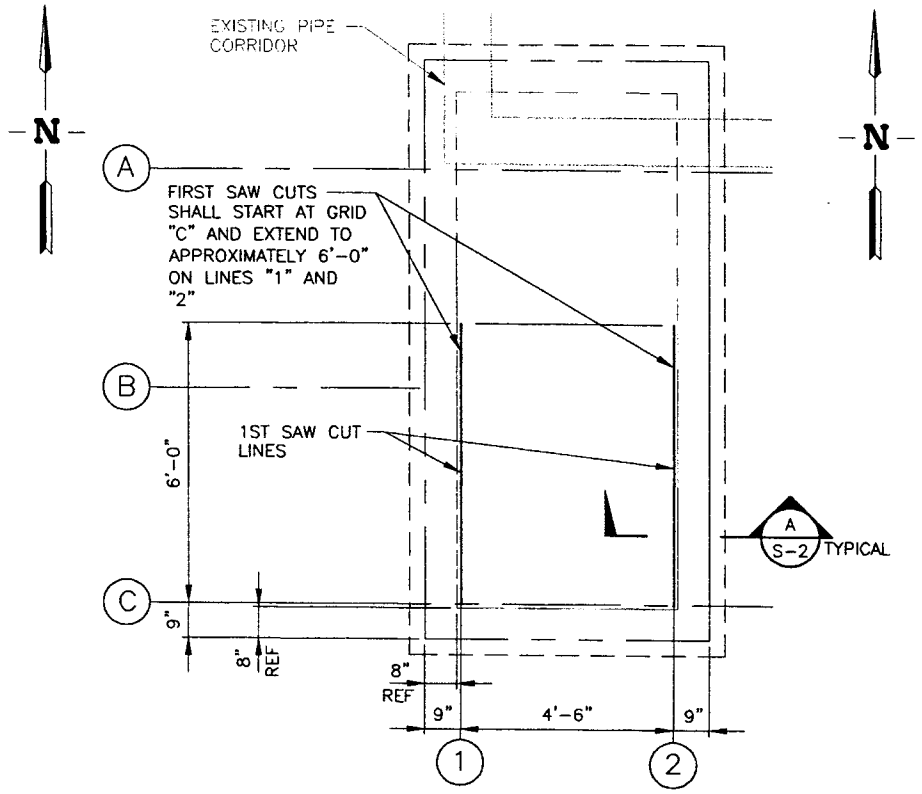


STEP 1

## TANK VAULT PLAN
SCALE 1/2"=1'-0"

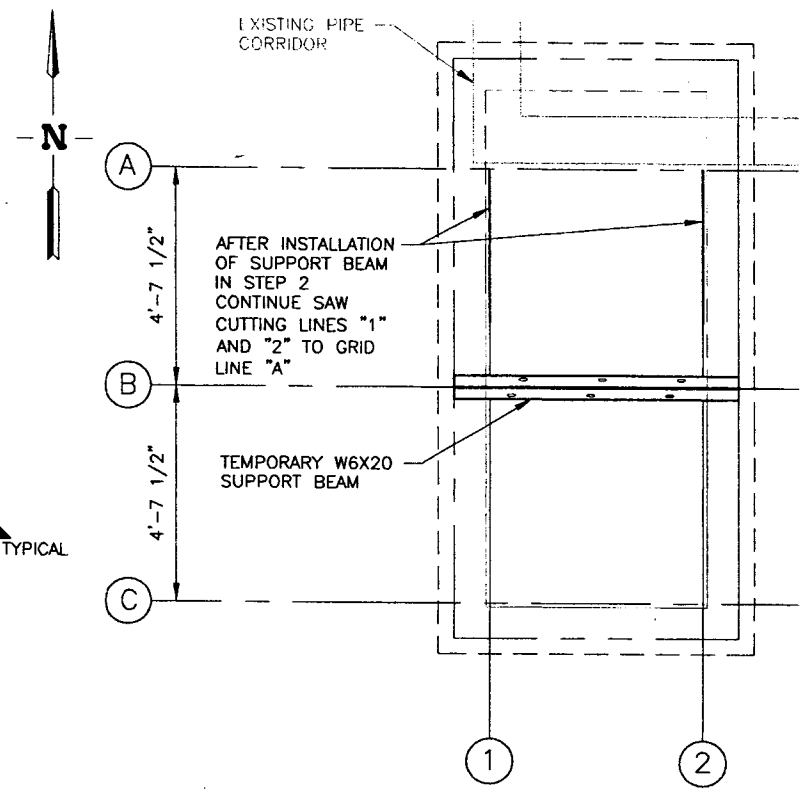


STEP 3

## TANK VAULT PLAN
SCALE 1/2"=1'-0"

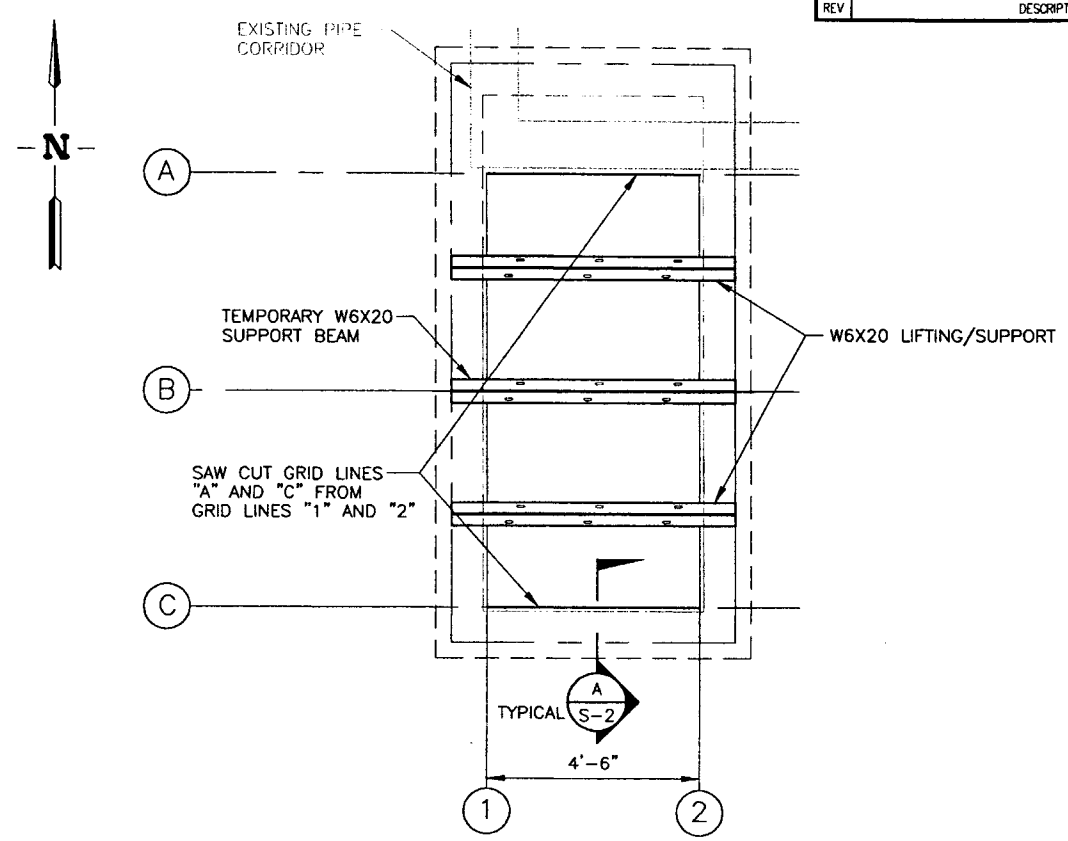


STEP 5

## TANK VAULT PLAN
SCALE 1/2"=1'-0"

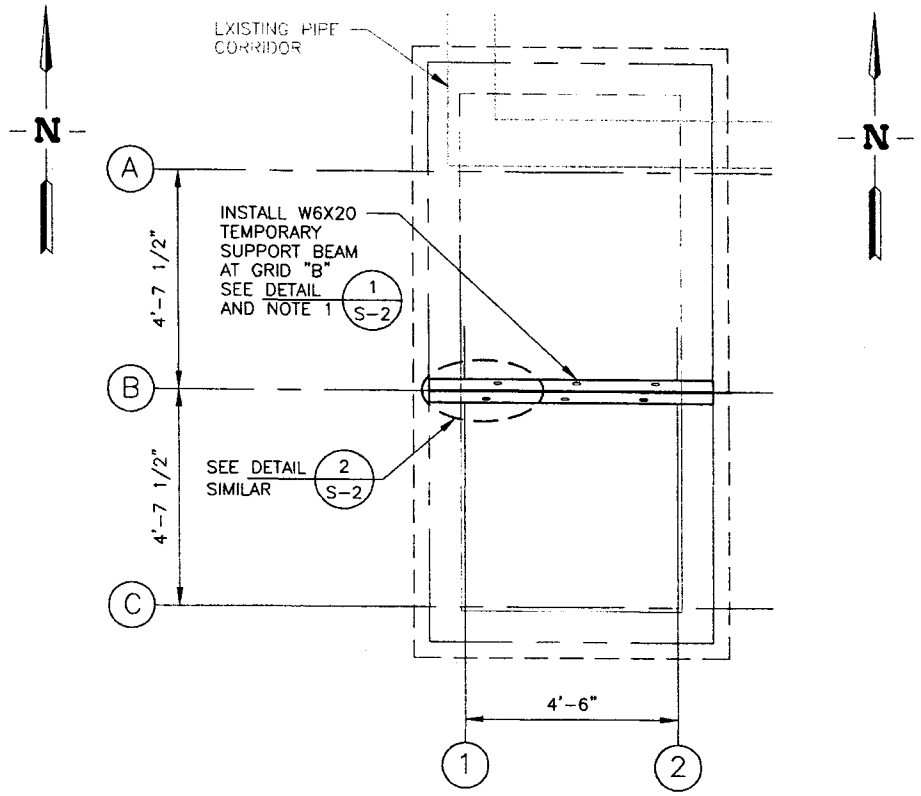


STEP 2

## TANK VAULT PLAN
SCALE 1/2"=1'-0"

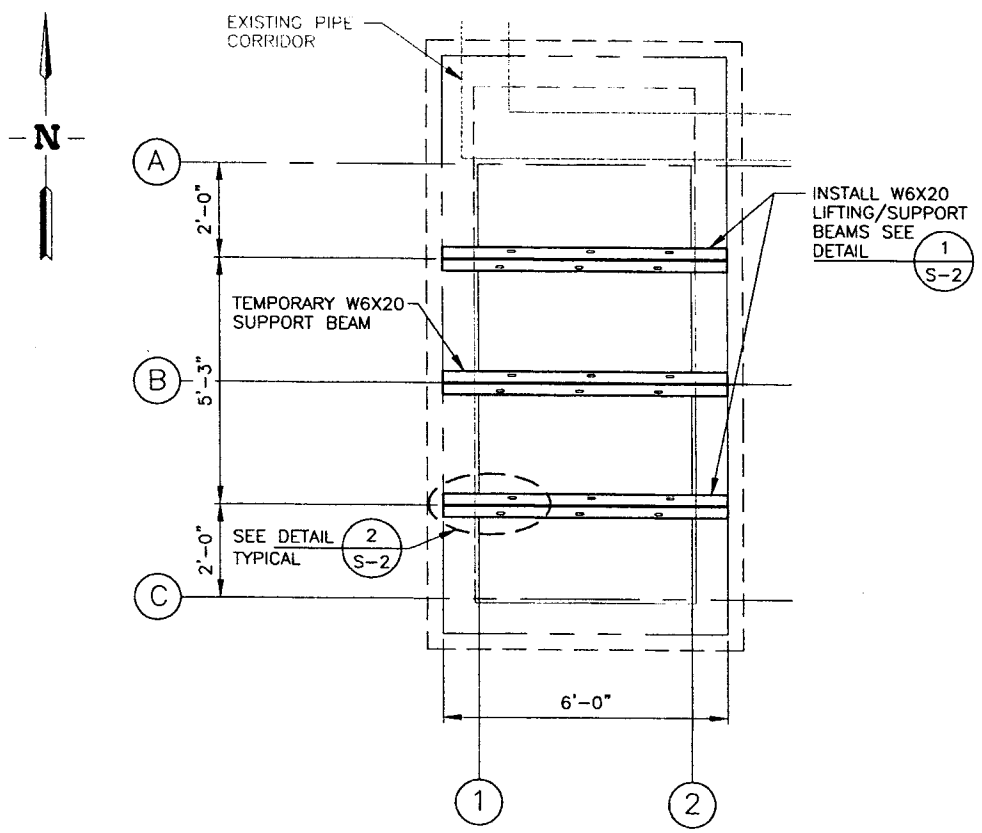


STEP 4

## TANK VAULT PLAN
SCALE 1/2"=1'-0"

## NOTES

1. TEMPORARY BEAMS ARE REQUIRED TO SUPPORT ROOF SLAB DURING DEMOLITION AND REMOVAL.
2. SUBCONTRACTOR SHALL CAPTURE AND CONTAIN THE WATER USED DURING SAW CUTTING AND DISPOSE OF AS DIRECTED.

PROFESSIONAL ENGINEER REGISTERED 6715 6-25-03 STATE OF IDAHO PATRICK WAYNE BRAGASSA

| | | |
|---|---|---|
| FOR DRAWING INDEX SEE DRAWING NO. 624407 | SUBCONTRACT NO. | INEEL (Idaho National Engineering & Environmental Laboratory) BECHTEL BWXT IDAHO, LLC |
| SCALE: 1/2" = 1'-0" | REQUESTER: K ROGERS | INEEL OU 3-13 GROUP 7 VES-SFE-20 HOT WASTE TANK REMEDIAL DESIGN PHASE I TANK VAULT ROOF - DEMOLITION |
| | DESIGN: P BRAGASSA | |
| | DRAWN: J MONCUR | |
| | PROJECT NO. 23052 | |
| | SPEC CODE | |
| DESIGN PHASE: AFC | FOR REVIEW/APPROVAL SIGNATURES SEE DAR NO. 102658 | SIZE D; CAGE CODE 01MF3; INDEX CODE NUMBER AREA 200 TYPE 0642 CL 60 ORIG 090; DWG-624415; REV |
| SAFETY CATEGORY: CG | EFFECTIVE DATE: 6-26-03 | SCALE: NOTED; SHEET S-1 |

File: 624415.dwg
Path: X:\VES-SFE-20 Hot Waste Tank Demolition\Dwg\23052dgn\624415.dwg
Layout Name: Beam layout | ID: MKJ

| REVISIONS | | |
|---|---|---|
| REV | DESCRIPTION | EFFECTIVE DATE: |

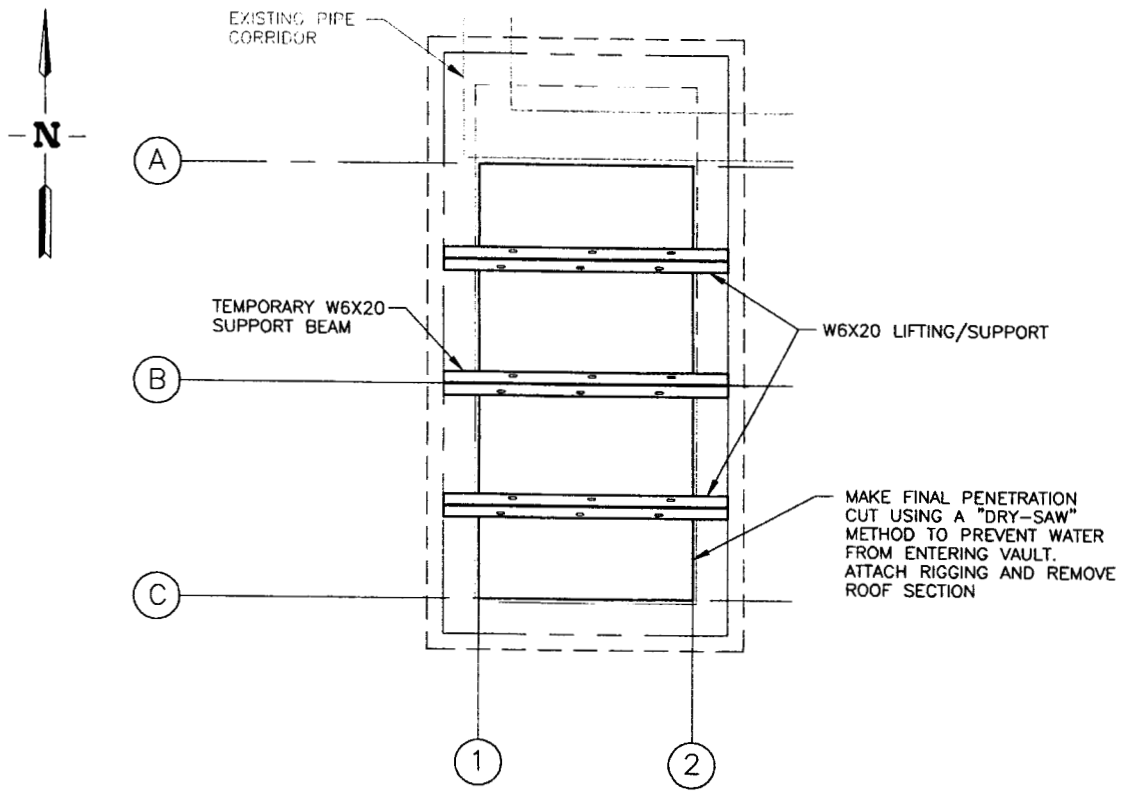


STEP 6

## TANK VAULT PLAN

SCALE 1/2"=1'-0"

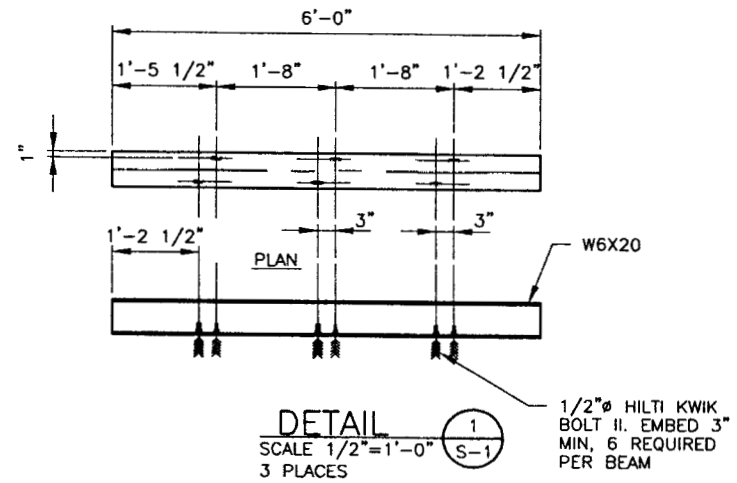


DETAIL 1/S-1
SCALE 1/2"=1'-0"
3 PLACES

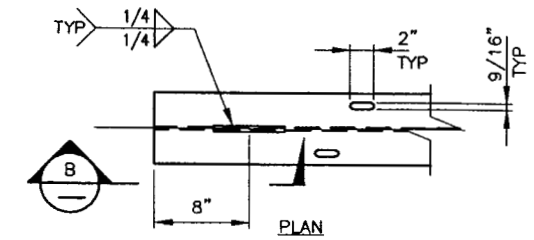


DETAIL 2/S-1
SCALE 1/2"=1'-0"
4 PLACES

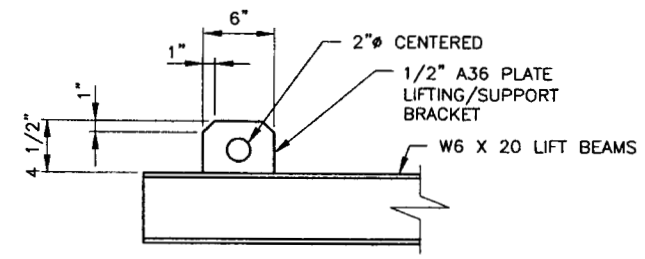


VIEW B/—
SCALE 1 1/2"=1'-0"
4 PLACES

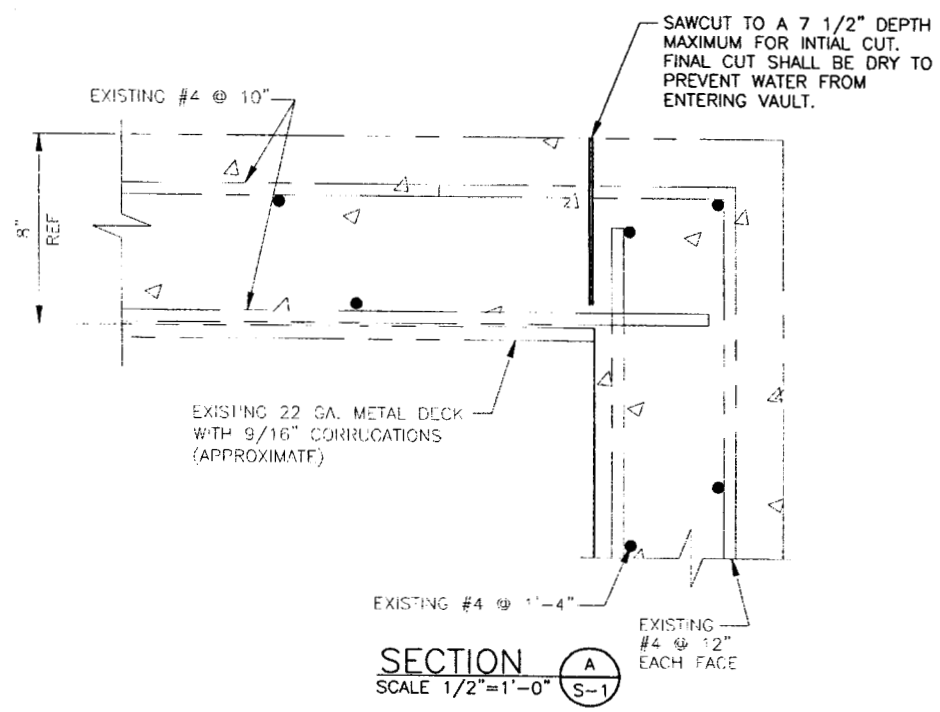


## SECTION A/S-1

SCALE 1/2"=1'-0"

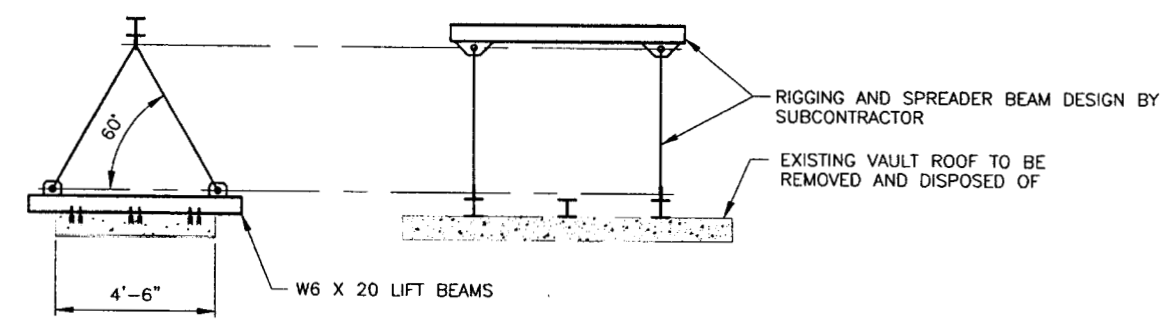


EXISTING VAULT ROOF REMOVAL

## RIGGING SUPPORT DIAGRAM

SCALE 3/8"=1'-0"

## NOTES

1. SPREADER BEAM SHALL BE USED TO PROVIDE VERTICAL LIFT.
2. MINIMUM SLING ANGLE SHALL BE 60 DEGREES.

PROFESSIONAL ENGINEER REGISTERED 6775 6-25-03 STATE OF IDAHO PATRICK WAYNE BRAGASSA

| | | |
|---|---|---|
| FOR DRAWING INDEX SEE DRAWING NO. 624407 | SUBCONTRACT NO. | INEEL (Idaho National Engineering & Environmental Laboratory) BECHTEL BWXT IDAHO, LLC |
| SCALE: 1/2" = 1'-0" / SCALE: 1 1/2" = 1'-0" | REQUESTER: K ROGERS | INEEL OU 3-13 GROUP 7 VES-SFE-20 HOT WASTE TANK REMEDIAL DESIGN PHASE I TANK VAULT ROOF, SECTION AND DETAILS |
| | DESIGN: P BRAGASSA | |
| | DRAWN: J MONCUR | |
| | PROJECT NO. 23052 | |
| | SPEC CODE | |
| DESIGN PHASE: AFC | FOR REVIEW/APPROVAL SIGNATURES SEE DAR NO. 102658 | SIZE D · CAGE CODE 01MF3 · INDEX CODE NUMBER AREA 200 TYPE 0642 Q 60 ORIG 090 · DWG-624416 · REV |
| SAFETY CATEGORY: CG | EFFECTIVE DATE: 6-26-03 | SCALE: NONE · SHEET S-2 |

File: 624416.dwg
Path: X:\VES-SFE-20 Hot Waste Tank D0\ene68a\23ysfg2n\W0X28s.FDM03\PH 1
Layout Name: Beam layout | ID: MXJ

| REVISIONS | | |
|---|---|---|
| REV | DESCRIPTION | EFFECTIVE DATE: |

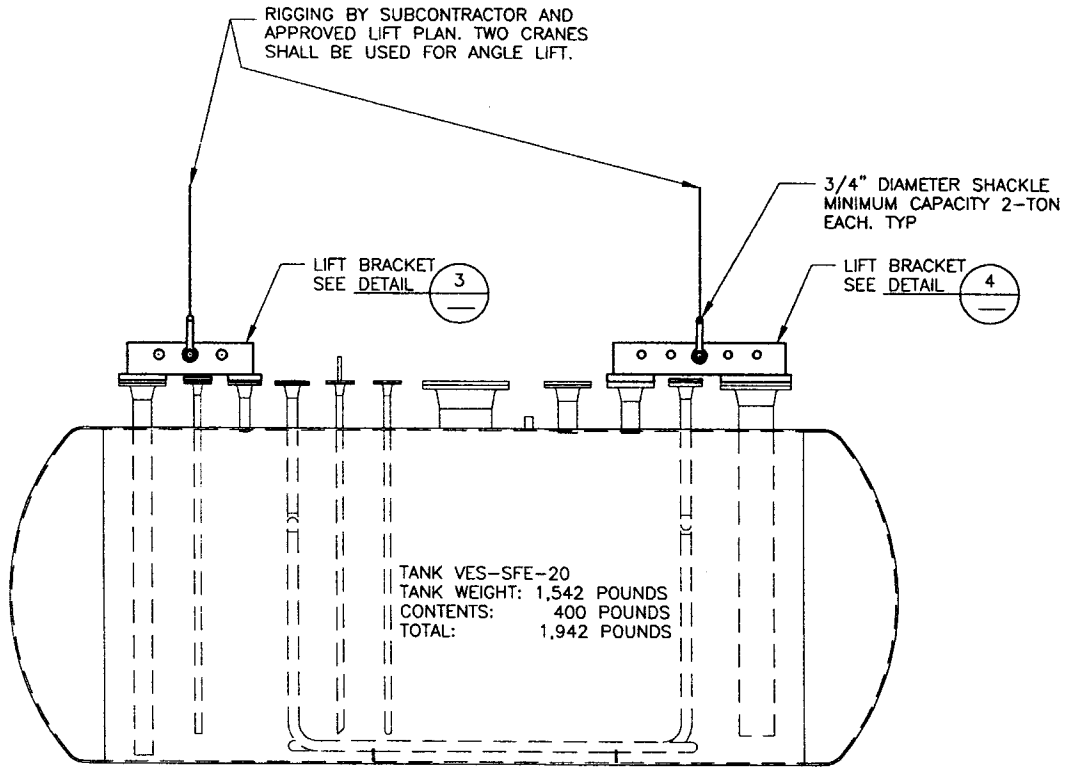


TANK VES-SFE-20 RIGGING
SCALE 1"=1'-0"

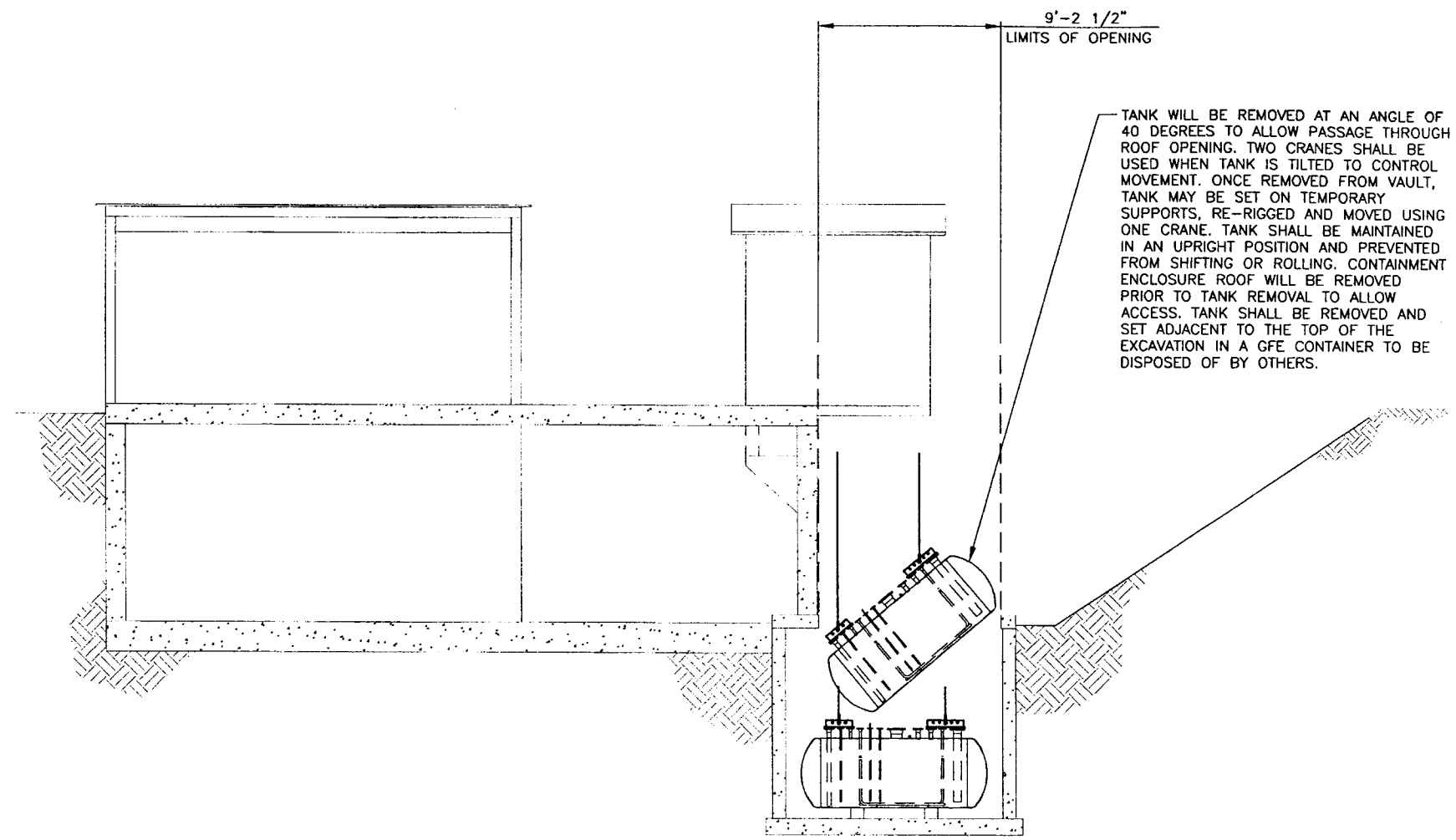


TANK VES-SFE-20 LIFTING
SCALE 1/4"=1'-0"

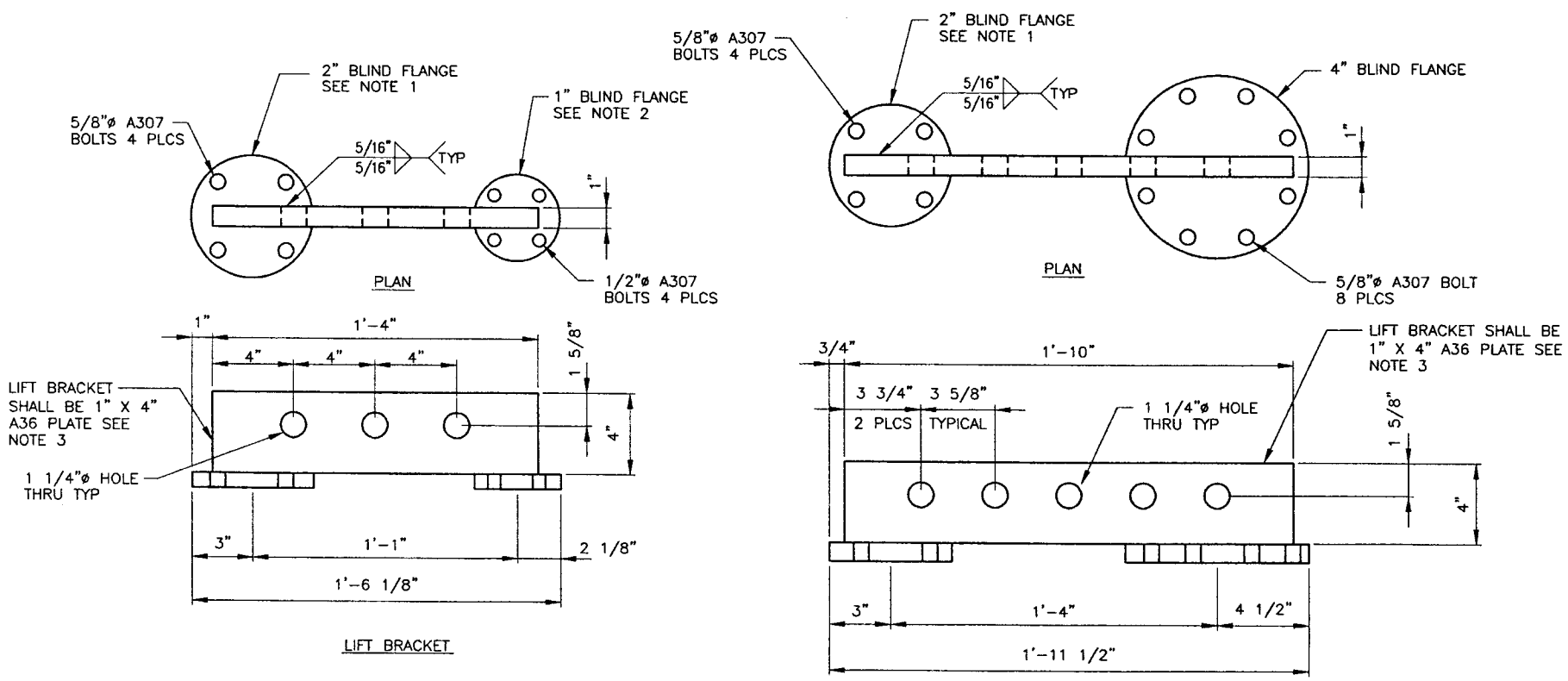


DETAIL 3
SCALE 3"=1'-0"



DETAIL 4
SCALE 3"=1'-0"

## NOTES

1. 2" BLIND FLANGE SHALL BE FABRICATED FROM 15/16" A36 PLATE. MATCH BOLT HOLES OF EXISTING FLANGE ON TANK VES-SFE-20.
2. 1" BLIND FLANGE SHALL BE FABRICATED FROM 3/4" A36 PLATE. MATCH BOLT HOLES OF EXISTING FLANGE ON TANK VES-SFE-20.
3. VERIFY BOLT HOLE ALIGNMENT PRIOR TO WELDING LIFT BRACKETS.

PROFESSIONAL ENGINEER REGISTERED 6775 6-25-03 STATE OF IDAHO PATRICK WAYNE BRAGASSA

| | | |
|---|---|---|
| FOR DRAWING INDEX SEE DRAWING NO. 624407 | SUBCONTRACT NO. | INEEL |
| SCALE: 1" = 1'-0" | REQUESTER: K ROGERS | INEEL OU 3-13 GROUP 7 VES-SFE-20 HOT WASTE TANK REMEDIAL DESIGN PHASE I TANK RIGGING AND LIFTING DETAILS |
| SCALE: 3" = 1'-0" | DESIGN: P BRAGASSA | |
| | DRAWN: J MONCUR | |
| | PROJECT NO. 23052 | |
| | SPEC CODE | |
| DESIGN PHASE: AFC | FOR REVIEW/APPROVAL SIGNATURES SEE DAR NO. 102658 | SIZE D · CAGE CODE 01MF3 · INDEX CODE NUMBER AREA 200 TYPE 0642 CL 60 ORIG 090 · DWG-624417 · REV |
| SAFETY CATEGORY: CG | EFFECTIVE DATE: 6-26-03 | SCALE: NOTED · SHEET S-3 |

File: 624417.dwg
Path: X:\VES-SFE-20 Hot Waste Tank Remedial Design\Working Dwgs\PH I
Layout Name: LAYOUT
ID: MXJ

| REVISIONS | | |
|---|---|---|
| REV | DESCRIPTION | EFFECTIVE DATE: |

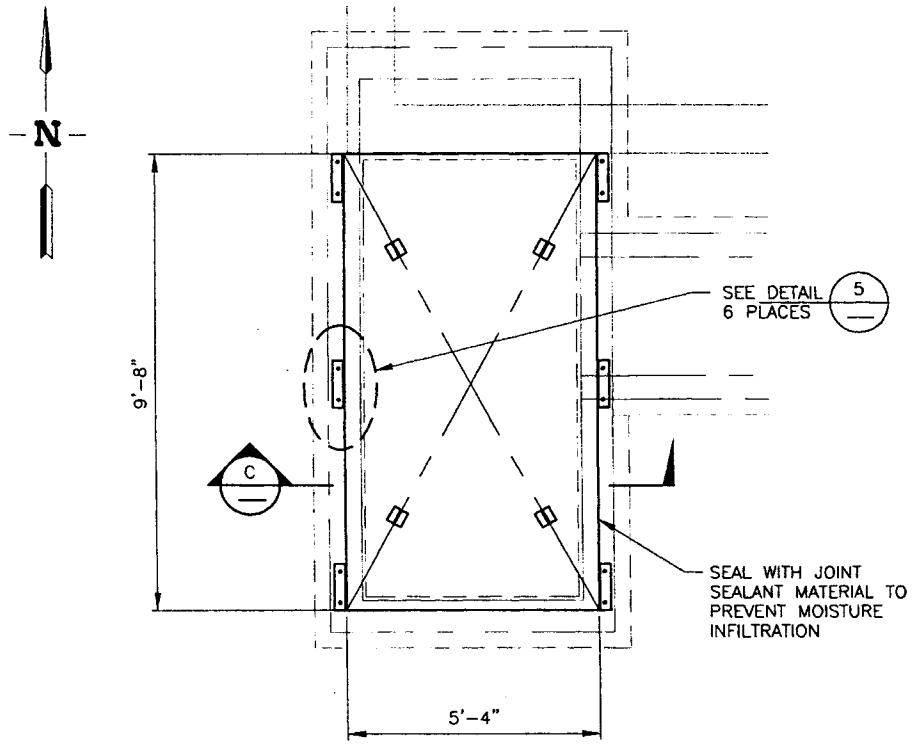


NEW PRECAST CONCRETE VAULT ROOF PLAN
SCALE 1/2"=1'-0"

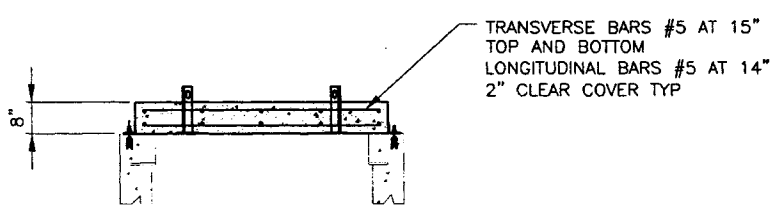


SECTION C
SCALE 1/2"=1'-0"

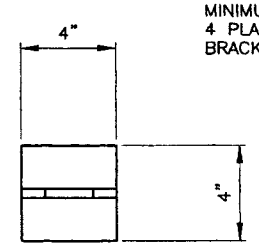


PLAN
NOTE: CONCRETE NOT SHOWN FOR CLARITY

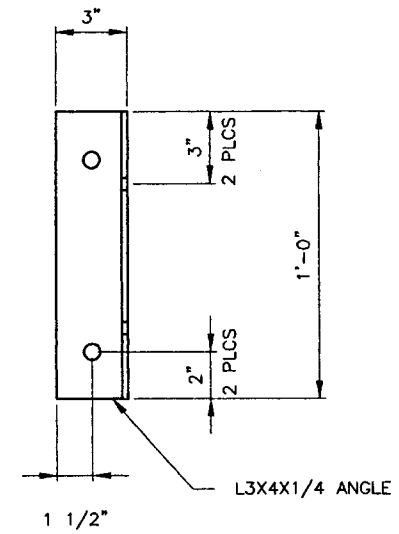


PLAN
NOTE: CONCRETE NOT SHOWN FOR CLARITY

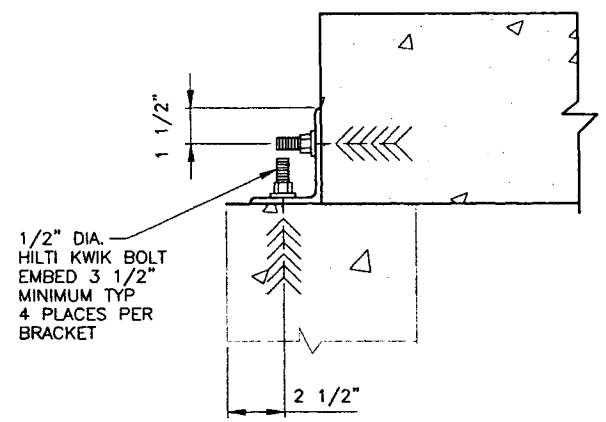


VAULT ROOF CONNECTION BRACKET

DETAIL 5
SCALE 3"=1'-0"

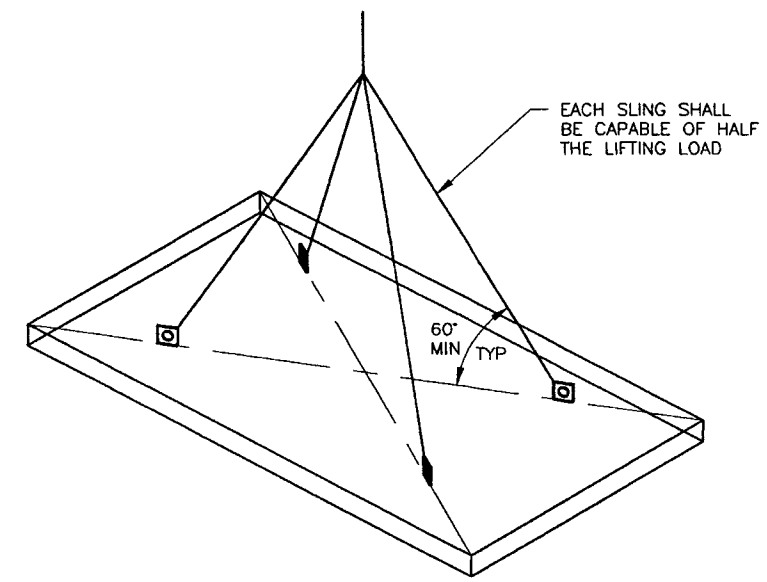


NEW VAULT ROOF SLAB

RIGGING SUPPORT
NTS
NOTE: APPROXIMATE WEIGHT = 5,200 POUNDS

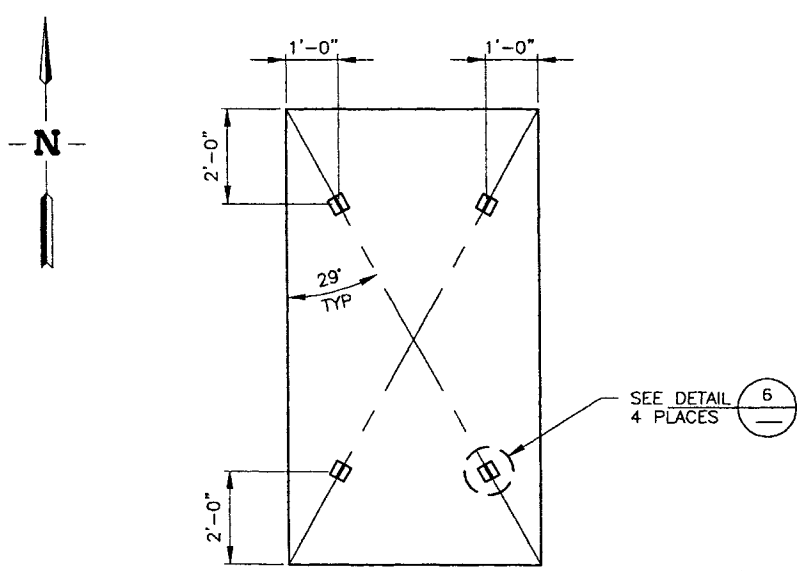


NEW VAULT ROOF LIFTING BRACKET PLAN
SCALE 1/2"=1'-0"
ESTIMATED LIFTING WEIGHT OF SLAB: 5,200 POUNDS

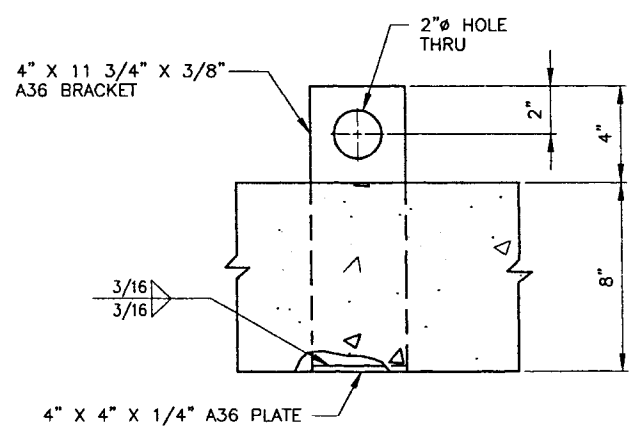


VAULT ROOF LIFTING BRACKET

DETAIL 6
SCALE 3"=1'-0"

## NOTES

1. PRECAST VAULT ROOF MAY BE CAST OFF SITE AND TRANSPORTED TO THE JOB SITE OR SITE CAST AND SET IN PLACE.
2. NEW VAULT ROOF SLAB SHALL HAVE A 28 DAY COMPRESSIVE STRENGTH OF 4000 PSI.

PROFESSIONAL ENGINEER REGISTERED 6775 6-25-03 STATE OF IDAHO PATRICK WAYNE BRAGASSA

| | | |
|---|---|---|
| FOR DRAWING INDEX SEE DRAWING NO. 624407 | SUBCONTRACT NO. | INEEL Idaho National Engineering & Environmental Laboratory BECHTEL BWXT IDAHO, LLC |
| SCALE: 1/2" = 1'-0" | REQUESTER: K ROGERS | INEEL |
| SCALE: 3" = 1'-0" | DESIGN: P BRAGASSA | OU 3-13 GROUP 7 |
| | DRAWN: J MONCUR | VES-SFE-20 HOT WASTE TANK REMEDIAL DESIGN |
| | PROJECT NO. 23052 | PHASE I |
| | SPEC CODE | NEW PRECAST VAULT ROOF AND DETAILS |
| DESIGN PHASE: AFC | FOR REVIEW/APPROVAL SIGNATURES SEE DAR NO. 102658 | SIZE D · CAGE CODE 01MF3 · INDEX CODE NUMBER AREA 200 TYPE 0642 CL 60 ORIG 090 · DWG-624418 · REV |
| SAFETY CATEGORY: CG | EFFECTIVE DATE: 6-26-03 | SCALE: NOTED · SHEET S-4 |

File: 624418.dwg Path: X:\VES-SFE-20 Hot Waste Tank Remedial Design\Working Drawings\PH I Layout Name: LAYOUT ID: MXJ

| REVISIONS | | |
|---|---|---|
| REV | DESCRIPTION | EFFECTIVE DATE: |

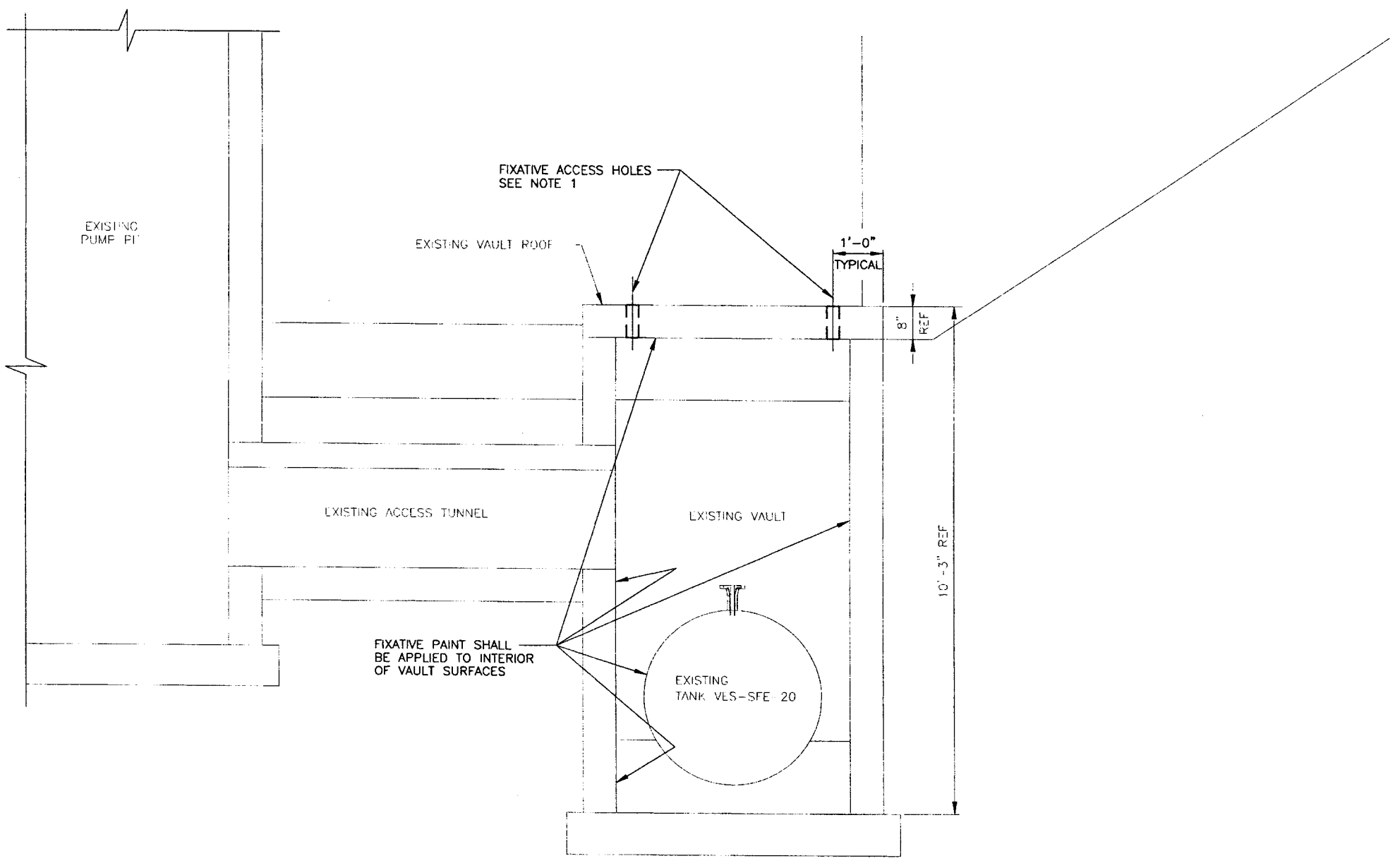


## VAULT FIXATIVE SECTION

SCALE 3/4"=1'-0"

## CONTAMINATION FIXATIVE NOTES

1. SUBCONTRACTOR SHALL CORE DRILL A MAXIMUM OF (6) 3" DIAMETER HOLES FOR ACCESS OF APPLICATION EQUIPMENT. SPACING OF HOLES AS SHOWN AND AS REQUIRED BY APPLICATION EQUIPMENT.
2. THE SUBCONTRACTOR SHALL PROVIDE THE NECESSARY TOOLS, EXTENSIONS AND EQUIPMENT TO APPLY THE FIXATIVE PAINT TO ALL SURFACES WITHIN THE VAULT INCLUDING THE FLOOR, AND UNDERSIDES OF BOTH THE TANK AND ROOF. ALL PIPING, VALVES, AND FLANGES SHALL BE COATED. THE ACCESS TUNNEL DOES NOT REQUIRE A COATING OF FIXATIVE PAINT.
3. THE PAINT SHALL BE APPLIED AT A RATE AND QUANTITY TO SUFFICIENTLY COAT ALL EXPOSED SURFACES. SURFACES SHALL BE ASSUMED SUFFICIENTLY COATED WHEN NO VISIBLE BARE SPOTS ARE OBSERVED USING REMOTE CAMERAS OR SIMILAR MEANS. FOR BIDDING PURPOSES ASSUME 1.0 MIL DRY FILM THICKNESS.
4. THE FIXATIVE PAINT SHALL BE APPLIED IMMEDIATELY AFTER THE ACCESS HOLES ARE CORED THROUGH THE VAULT ROOF. THE FIXATIVE PAINT SHALL BE CURED PRIOR TO SAWCUTTING OF THE VAULT ROOF FOR REMOVAL. AFTER REMOVAL OF THE VAULT ROOF, IT MAY BE NECESSARY TO APPLY ADDITIONAL FIXATIVE TO AREAS NOT ADEQUATELY COATED.
5. UPON COMPLETION OF THE TANK AND PIPING REMOVAL, LOOSE SURFACE CONTAMINATION REMOVAL AND CLEAN-UP WORK, A FINAL COATING OF PAINT SHALL BE APPLIED TO THE REMAINING VAULT CONCRETE WALLS, FLOOR AND ROOF. THE FINAL COATING SHALL PROVIDE AN OVERALL ACCUMULATED DRY FILM THICKNESS OF 2 MILS.

PROFESSIONAL ENGINEER REGISTERED 6776 6-25-03 STATE OF IDAHO PATRICK WAYNE BRAGASSA

| | | |
|---|---|---|
| FOR DRAWING INDEX SEE DRAWING NO. 624407 | SUBCONTRACT NO. | INEEL BECHTEL BWXT IDAHO, LLC |
| 1' 0 1' 1'-6" SCALE: 3/4" = 1'-0" | REQUESTER: K ROGERS<br>DESIGN: P BRAGASSA<br>DRAWN: J MONCUR<br>PROJECT NO. 23052<br>SPEC CODE | INEEL<br>OU 3-13 GROUP 7<br>VES-SFE-20 HOT WASTE TANK REMEDIAL DESIGN<br>PHASE I<br>FIXATIVE VAULT SECTION |
| DESIGN PHASE: AFC | FOR REVIEW/APPROVAL SIGNATURES SEE DAR NO. 102658 | SIZE D · CAGE CODE 01MF3 · INDEX CODE NUMBER AREA 200 TYPE 0642 CL 60 ORIG 090 · DWG-624419 · REV |
| SAFETY CATEGORY: CG | EFFECTIVE DATE: 6-26-03 | SCALE: NOTED · SHEET S-5 |

File: 624419.dwg
Path: X:\VES-SFE-20 Hot Waste Rem Dsenedlly\25x60\Wdh005.DWG\Pit 1
Layout Name: LAYOUT ID: MXJ

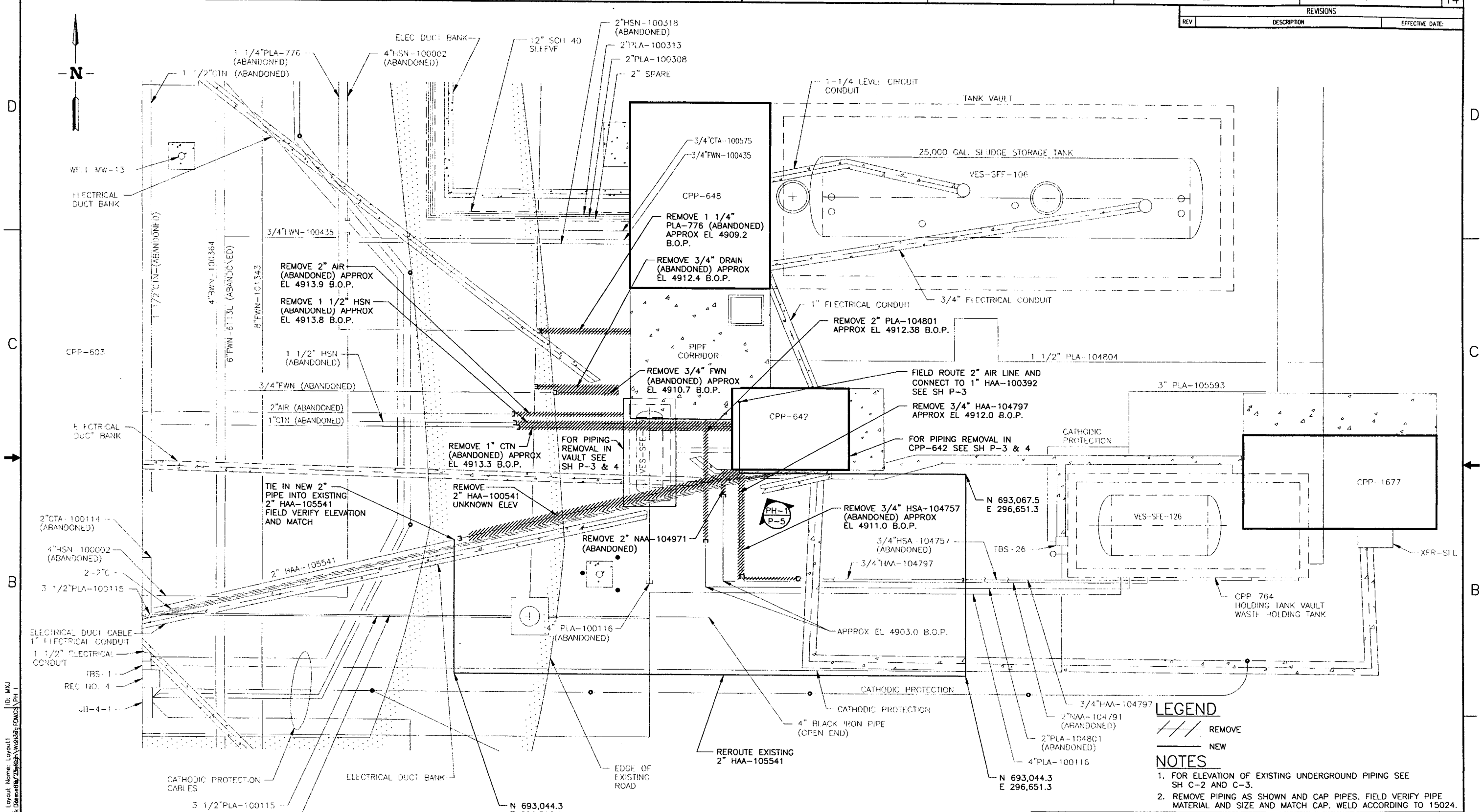


## PIPING PLOT PLAN

## LEGEND

REMOVE

NEW

## NOTES

1. FOR ELEVATION OF EXISTING UNDERGROUND PIPING SEE SH C-2 AND C-3.
2. REMOVE PIPING AS SHOWN AND CAP PIPES. FIELD VERIFY PIPE MATERIAL AND SIZE AND MATCH CAP. WELD ACCORDING TO 15024.

| REVISIONS | | |
|---|---|---|
| REV | DESCRIPTION | EFFECTIVE DATE: |

PROFESSIONAL ENGINEER REGISTERED 7166 STATE OF IDAHO EDWARD C. ANDERSON

| | |
|---|---|
| FOR DRAWING INDEX SEE DRAWING NO. 624407 | SUBCONTRACT NO. |
| SCALE: 1" = 5.0' | REQUESTER: K ROGERS |
| | DESIGN: R VAN VOAST |
| | DRAWN: J MONCUR |
| | PROJECT NO. 23052 |
| | SPEC CODE |
| DESIGN PHASE: AFC | FOR REVIEW/APPROVAL SIGNATURES SEE DAR NO. 102658 |
| SAFETY CATEGORY: CG | EFFECTIVE DATE: 6-26-03 |

INEEL

INEEL
OU 3-13 GROUP 7
VES-SFE-20 HOT WASTE TANK REMEDIAL DESIGN
PHASE I
PIPING PLOT PLAN

| SIZE | CAGE CODE | INDEX CODE NUMBER | | | | DWG- | REV |
|---|---|---|---|---|---|---|---|
| | | AREA | TYPE | Q | ORIG | | |
| D | 01MF3 | 200 | 0200 | 50 | 090 | 624420 | |

SCALE: 1"=5'-0" SHEET P-1

File: 624420.dwg
Path: K:\VES-SFE-20 Hot Waste Tank\Deleeuw\23052\Design\Working\FDMCS\PH 1
Layout Name: Layout1 ID: WKJ

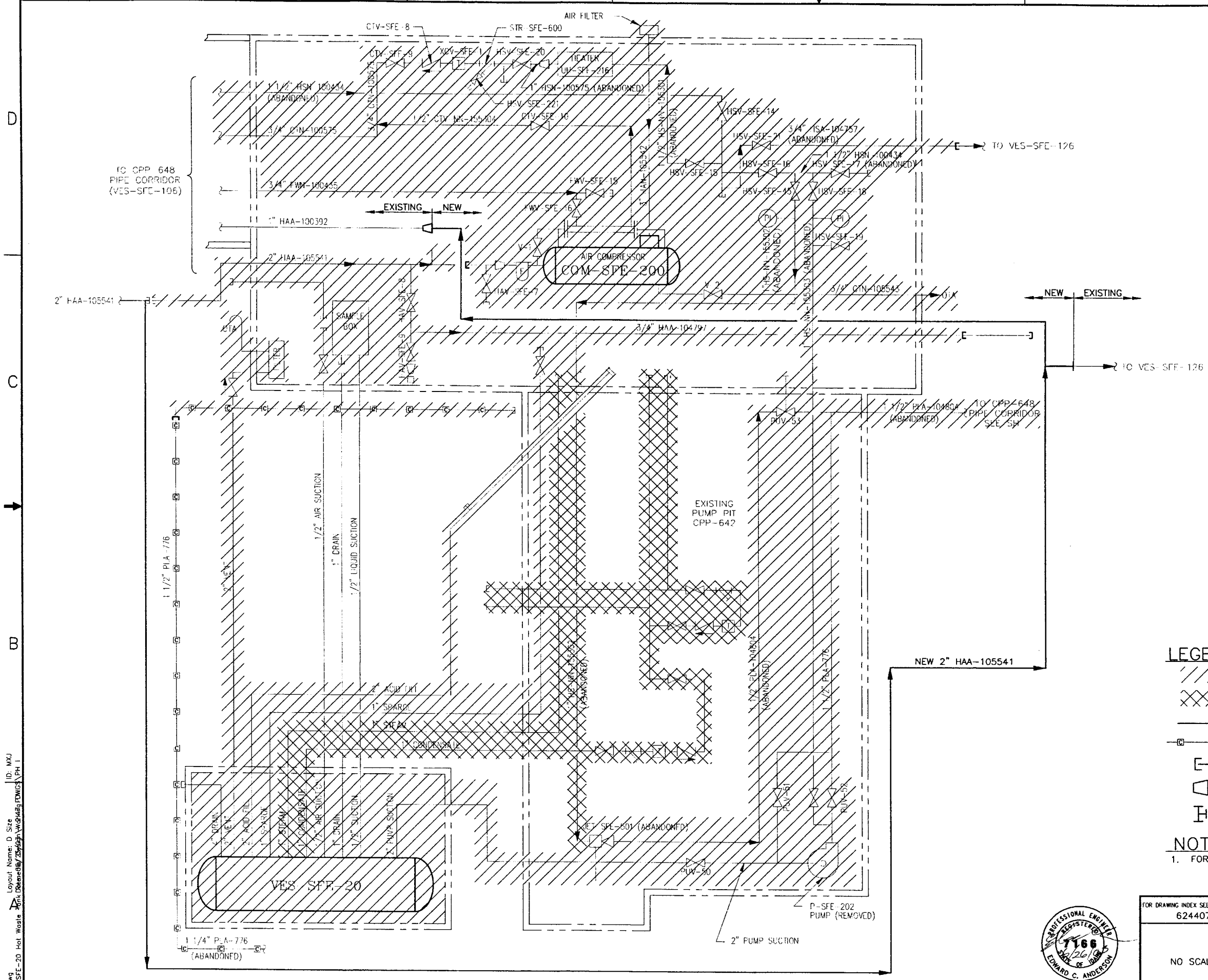


## LEGEND

- REMOVE
- REMOVE PIPING W/ASBESTOS
- NEW RELOCATED ACTIVE LINE SUPPORTING VES-SFE-106/126
- RCRA CLOSURE (NOT COVERED UNDER GROUP 7)
- CAP
- REDUCER
- TEE

## NOTES

1. FOR ACTUAL PHYSICAL LAYOUT OF PIPING SEE SH P-1, P-3, P-4, P-5 AND P-6.

| REVISIONS | | |
|---|---|---|
| REV | DESCRIPTION | EFFECTIVE DATE: |

PROFESSIONAL ENGINEER REGISTERED 7166 STATE OF IDAHO EDWARD C. ANDERSON

| | | |
|---|---|---|
| FOR DRAWING INDEX SEE DRAWING NO. 624407 | SUBCONTRACT NO. | INEEL Idaho National Engineering & Environmental Laboratory BECHTEL BWXT IDAHO, LLC |
| NO SCALE | REQUESTER: K ROGERS<br>DESIGN: R VAN VOAST<br>DRAWN: J MONCUR<br>PROJECT NO. 23052<br>SPEC CODE | INEEL<br>OU 3-13 GROUP 7<br>VES-SFE-20 HOT WASTE TANK REMEDIAL DESIGN<br>PHASE I<br>P&ID |
| DESIGN PHASE: AFC | FOR REVIEW/APPROVAL SIGNATURES SEE DAR NO. 102658 | SIZE D · CAGE CODE 01MF3 · INDEX CODE NUMBER AREA 200 TYPE 0200 CL 24 ORIG 090 · DWG-624421 · REV |
| SAFETY CATEGORY: CG | EFFECTIVE DATE: 6-26-03 | SCALE: NONE · SHEET P-2 |

File: 624421.dwg
Path: X:\VES-SFE-20 Hot Waste Tank Remedial Design\Working Dwgs\PH I
Layout Name: D Size
ID: MXJ

| REVISIONS | | |
|---|---|---|
| REV | DESCRIPTION | EFFECTIVE DATE: |

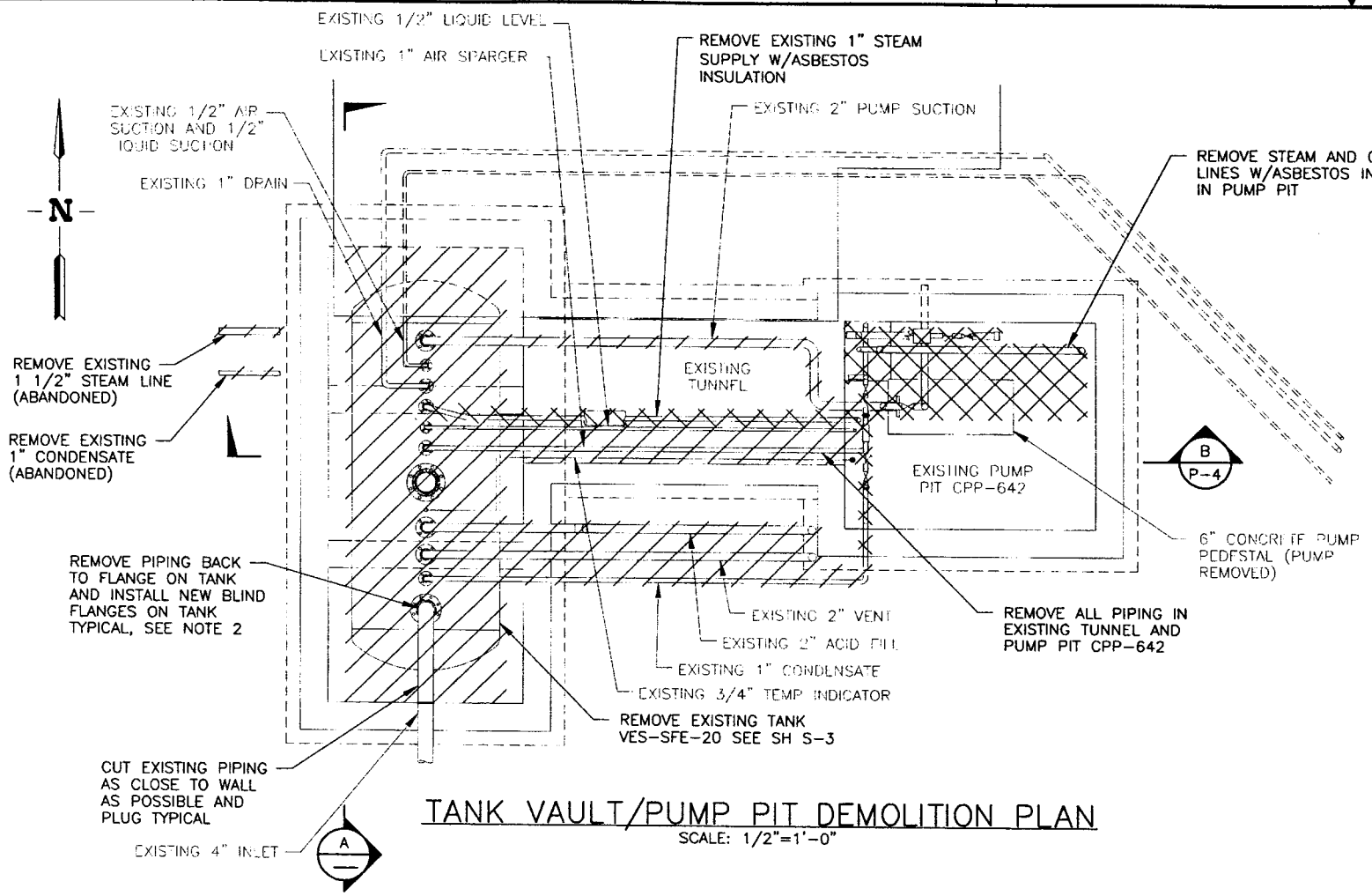


## TANK VAULT/PUMP PIT DEMOLITION PLAN

SCALE: 1/2"=1'-0"

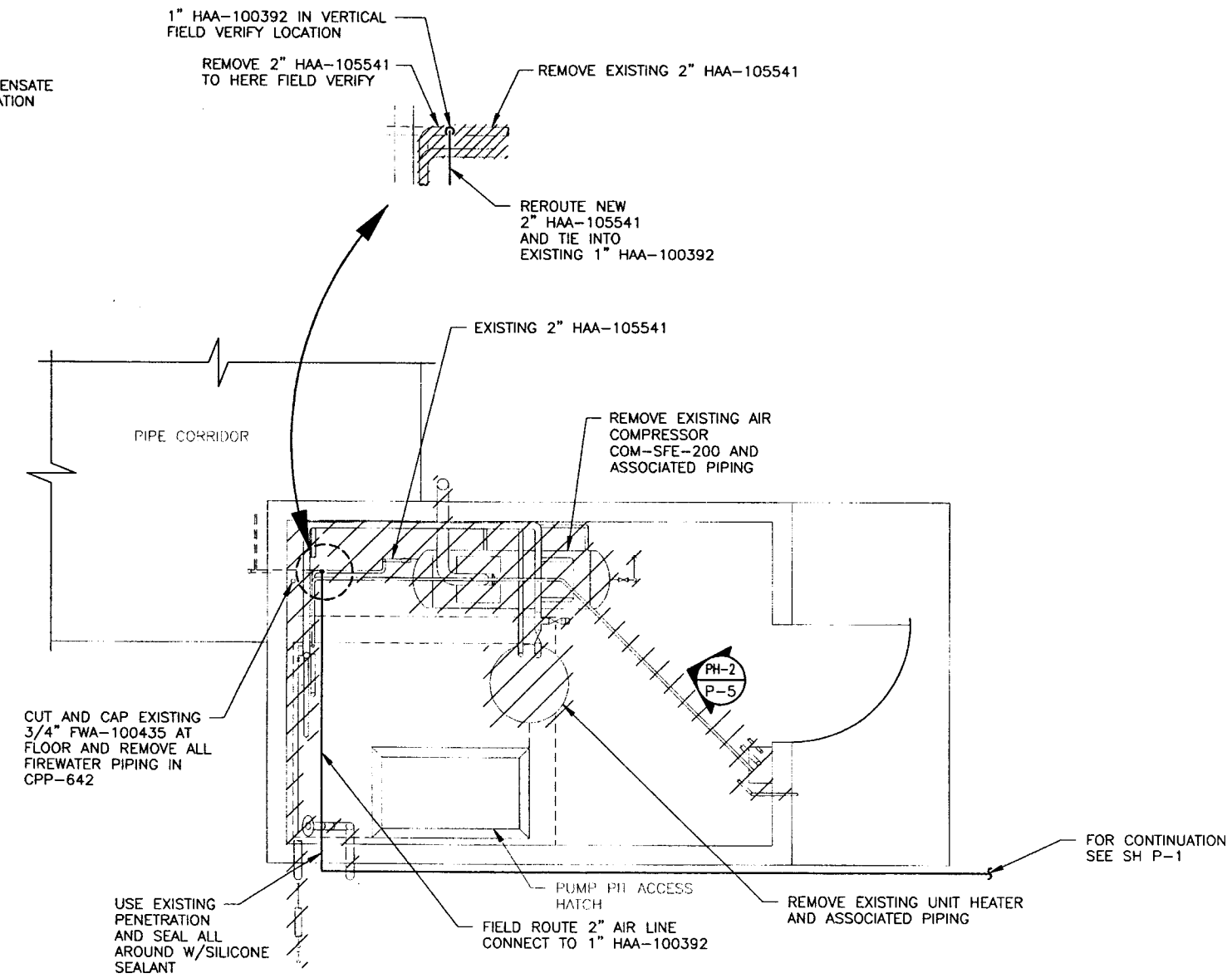


## CPP-642 FLOOR PLAN

SCALE: 1/2"=1'-0"

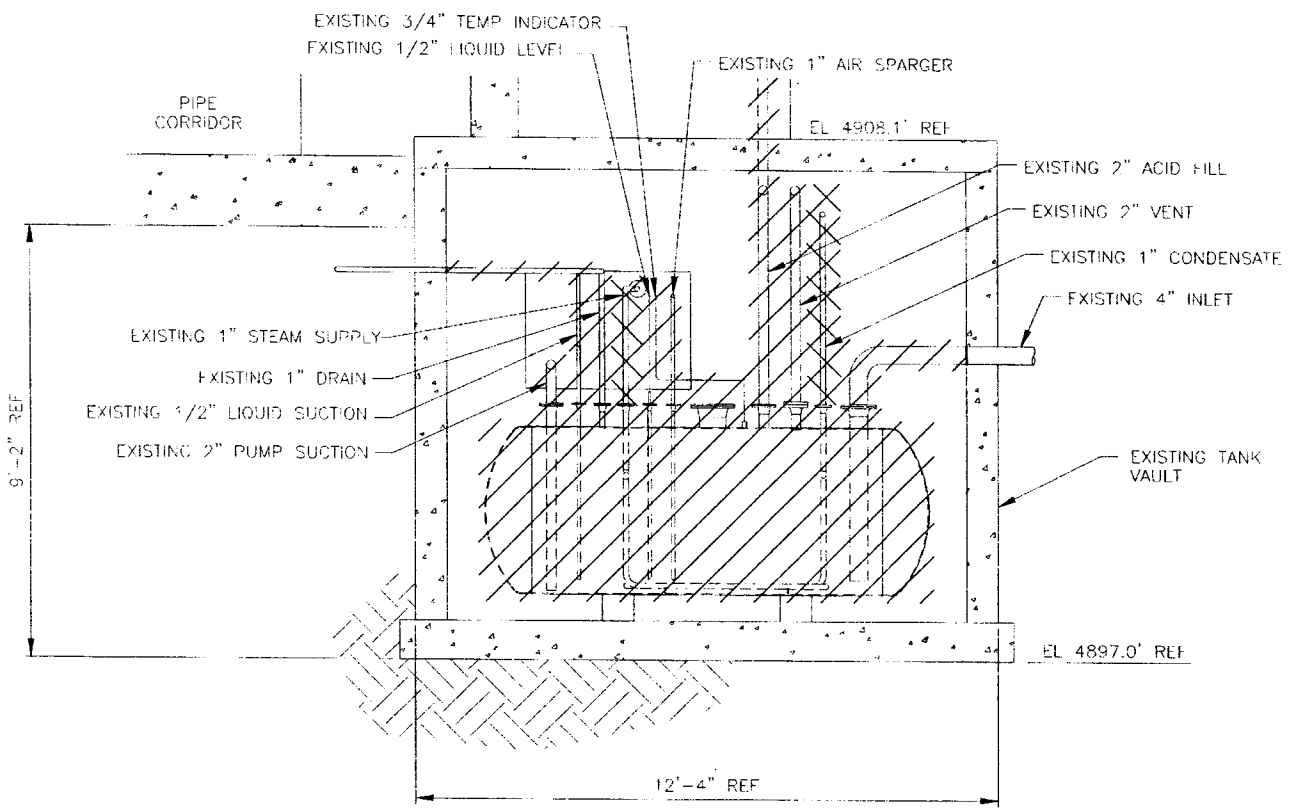


## SECTION A

SCALE: 1/2"=1'-0"

NOTE: EXISTING GRADE EL 4918.2' REF

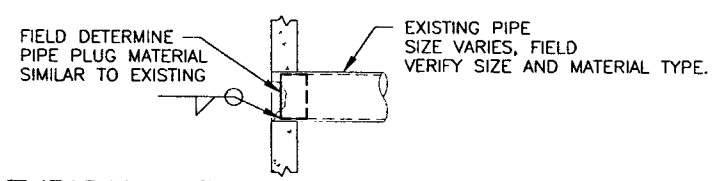


## TYPICAL INTERNAL PIPE PLUG DETAIL

## LEGEND

- REMOVE
- REMOVE PIPING W/ASBESTOS
- NEW

## NOTES

1. REMOVE COMPRESSOR AND PIPING IN CPP-642, PUMP PIT AND TUNNEL AND APPROXIMATELY 90 LF OF PIPING WITH ASBESTOS INSULATION.
2. INSTALL BLIND FLANGES TO TANK PORTS BEFORE REMOVAL OF VESSEL VES-SFE-20. FOR BLIND FLANGE AND CAP SIZES SEE SH C-6 AND FOR BLIND FLANGES TO BE MODIFIED SEE SH S-3.
3. SEAL ALL HOLES IN WALL LEFT BY REMOVAL OF PIPING WITH NON-SHRINK GROUT OR SILICONE SEALANT.

PROFESSIONAL ENGINEER REGISTERED 7166 STATE OF IDAHO EDWARD C. ANDERSON

| | | |
|---|---|---|
| FOR DRAWING INDEX SEE DRAWING NO. 624407 | SUBCONTRACT NO. | INEEL — Idaho National Engineering & Environmental Laboratory — BECHTEL BWXT IDAHO, LLC |
| 1' 0 1' 2' 3' SCALE: 1/2" = 1'-0" | REQUESTER: K ROGERS | INEEL OU 3-13 GROUP 7 VES-SFE-20 HOT WASTE TANK REMEDIAL DESIGN PHASE I PLANS, SECTION AND DETAIL |
| | DESIGN: R VAN VOAST | |
| | DRAWN: J MONCUR | |
| | PROJECT NO. 23052 | |
| | SPEC CODE | |
| DESIGN PHASE: AFC | FOR REVIEW/APPROVAL SIGNATURES SEE DAR NO. 102658 | SIZE D · CAGE CODE 01MF3 · INDEX CODE NUMBER AREA 200 TYPE 0642 CL 50 ORIG 090 · DWG-624422 · REV |
| SAFETY CATEGORY: CG | EFFECTIVE DATE: 6-26-03 | SCALE: NOTED · SHEET P-3 |

FMT-D1-REV 3.3
File: 624422.dwg
Path: X:\VES-SFE-20 Hot Waste Tank Remediation\Dwgs\Wd24dg\FDMC\PH 1
Layout Name: D Size
ID: MKJ

| REVISIONS | | |
|---|---|---|
| REV | DESCRIPTION | EFFECTIVE DATE: |

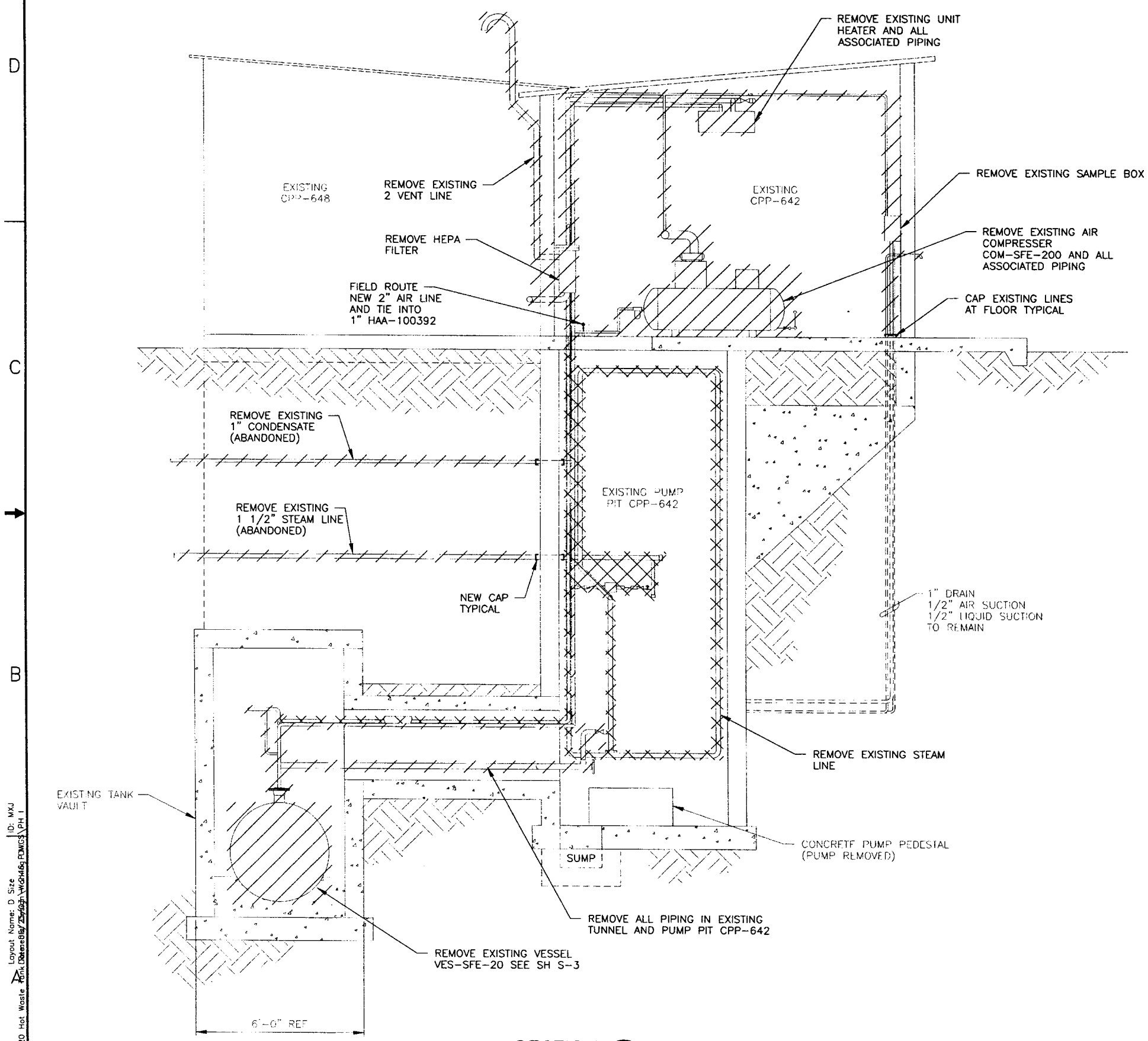


SECTION B/P-3
SCALE 1/2"=1'-0"

## LEGEND

- REMOVE
- REMOVE PIPING W/ASBESTOS

PROFESSIONAL ENGINEER REGISTERED 7166 STATE OF IDAHO EDWARD C. ANDERSON

| | | |
|---|---|---|
| FOR DRAWING INDEX SEE DRAWING NO. 624407 | SUBCONTRACT NO. | INEEL |
| SCALE: 1/2" = 1'-0" | REQUESTER: K ROGERS | INEEL OU 3-13 GROUP 7 VES-SFE-20 HOT WASTE TANK REMEDIAL DESIGN PHASE I SECTION |
| | DESIGN: R VAN VOAST | |
| | DRAWN: J MONCUR | |
| | PROJECT NO. 23052 | |
| | SPEC CODE | |
| DESIGN PHASE: AFC | FOR REVIEW/APPROVAL SIGNATURES SEE DAR NO. 102658 | SIZE D · CAGE CODE 01MF3 · INDEX CODE NUMBER AREA 200 TYPE 0642 CL 50 ORIG 090 · DWG-624423 · REV |
| SAFETY CATEGORY: CG | EFFECTIVE DATE: 6-26-03 | SCALE: NOTED · SHEET P-4 |

File: 624423.dwg Path: X:\VES-SFE-20 Hot Waste Tank Date: 6/26/03 Layout Name: D Size ID: MXJ

| REVISIONS | | |
|---|---|---|
| REV | DESCRIPTION | EFFECTIVE DATE |

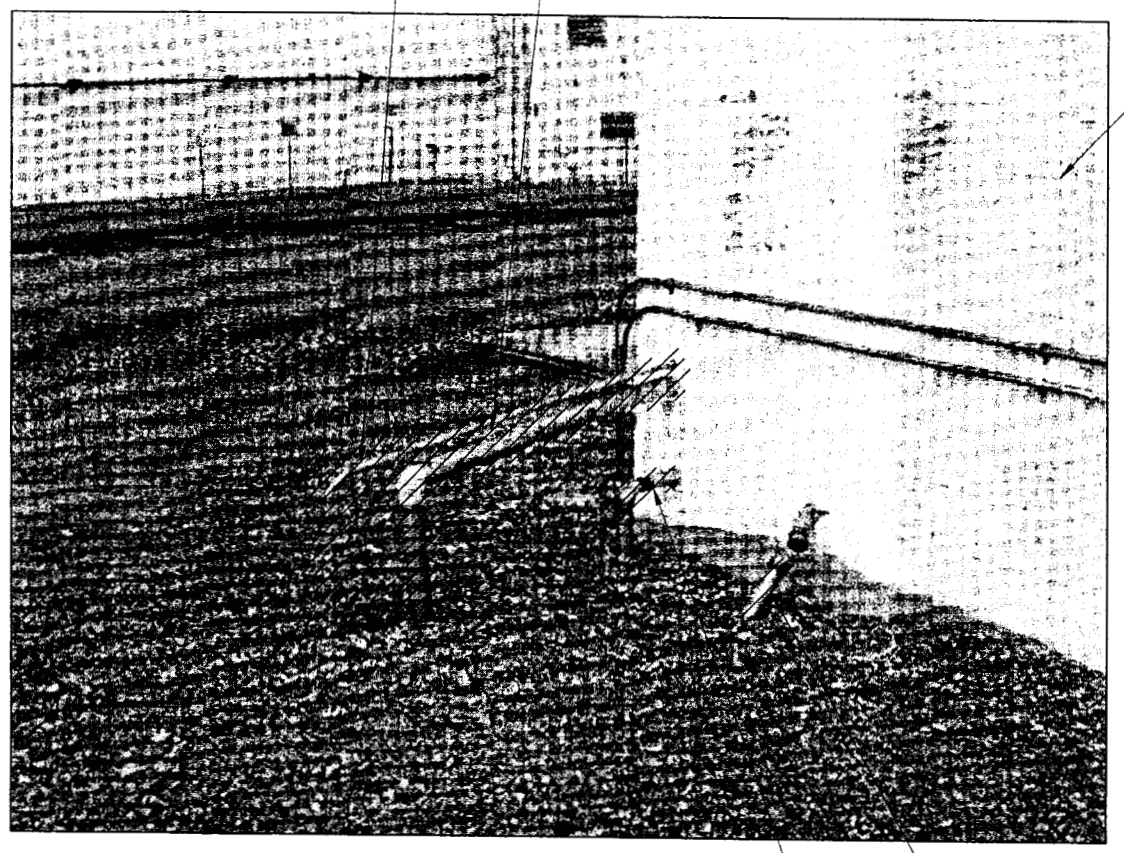


PHOTO PH-1 / P-1

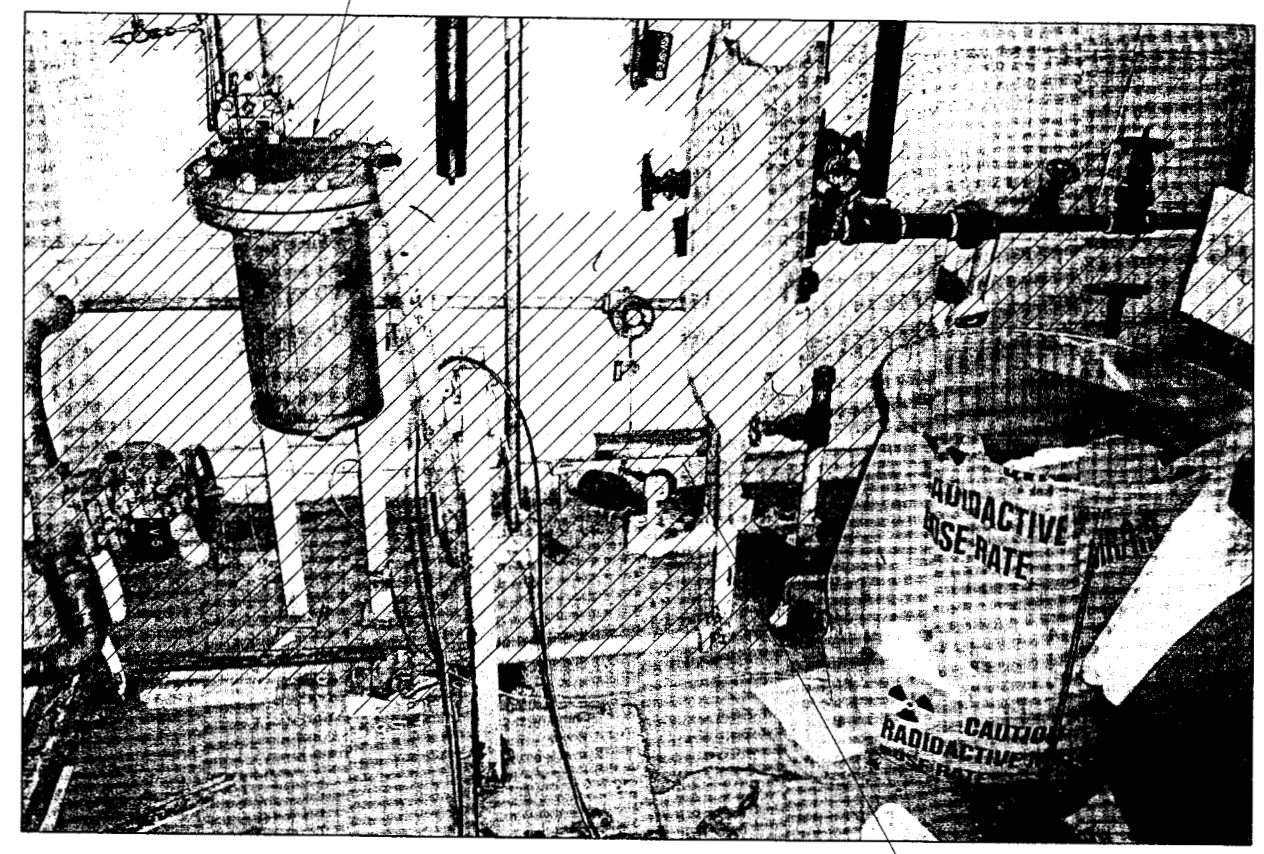


PHOTO PH-2 / P-3

LEGEND

REMOVE

PROFESSIONAL ENGINEER REGISTERED 7166 STATE OF IDAHO EDWARD C. ANDERSON

| | | |
|---|---|---|
| FOR DRAWING INDEX SEE DRAWING NO. 624407 | SUBCONTRACT NO. | INEEL (Idaho National Engineering & Environmental Laboratory) BECHTEL BWXT IDAHO, LLC |
| NO SCALE | REQUESTER: K ROGERS<br>DESIGN: R VAN VOAST<br>DRAWN: J MONCUR<br>PROJECT NO. 23052<br>SPEC CODE | INEEL<br>OU 3-13 GROUP 7<br>VES-SFE-20 HOT WASTE TANK REMEDIAL DESIGN<br>PHASE 1<br>PHOTOS |
| DESIGN PHASE: AFC | FOR REVIEW/APPROVAL SIGNATURES<br>SEL DAR NO. 102658 | SIZE D; CAGE CODE 01MF3; INDEX CODE NUMBER AREA 200, TYPE 0642, SQ 50, ORIG 090; DWG-624424; REV |
| SAFETY CATEGORY: CG | EFFECTIVE DATE: 6-26-03 | SCALE: NONE; SHEET P-5 |

File: 624424.dwg
Path: X:\VES-SFE-20 Hot Waste Tank Remedial Design\Phase 1\Photos\624424.dwg
Layout Name: D Size
Plot Date: 7/9/2003
ID: MKJ

| REVISIONS | | |
|---|---|---|
| REV | DESCRIPTION | EFFECTIVE DATE: |

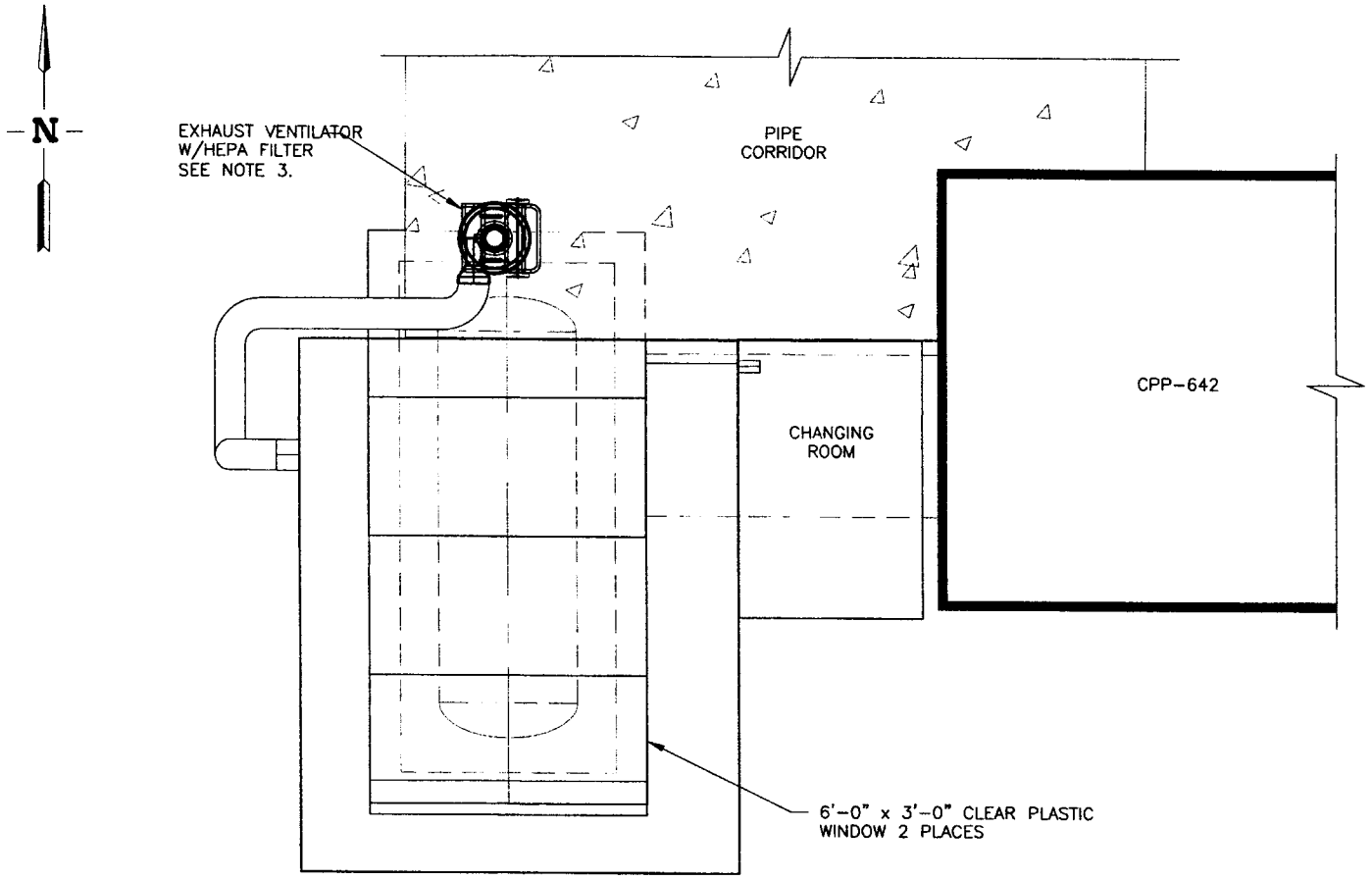


TYP TENT PLAN
SCALE 1/2"=1'-0"

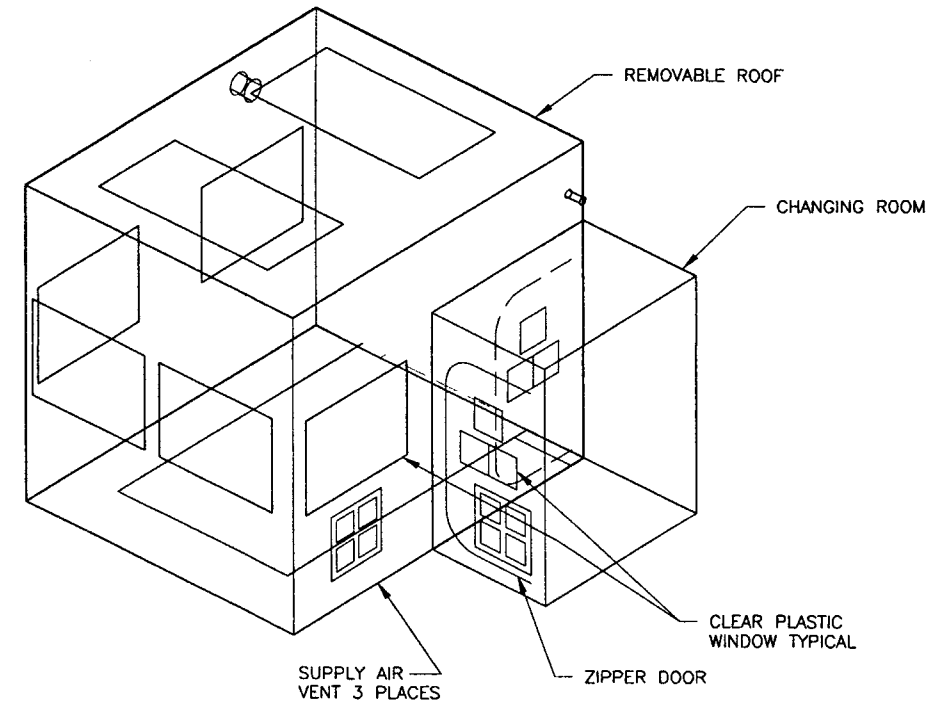


NORTHWEST VIEW
NTS

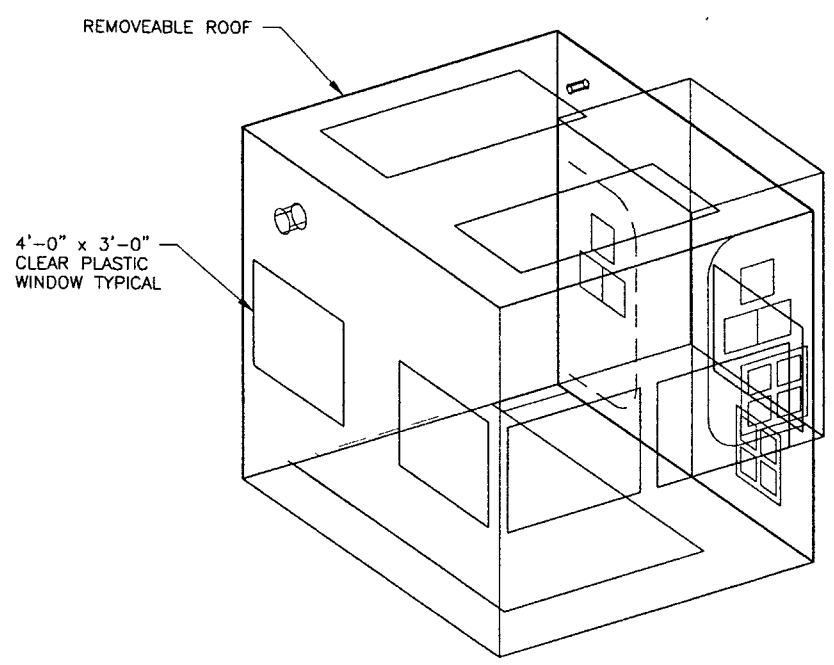


NORTHEAST VIEW
NTS

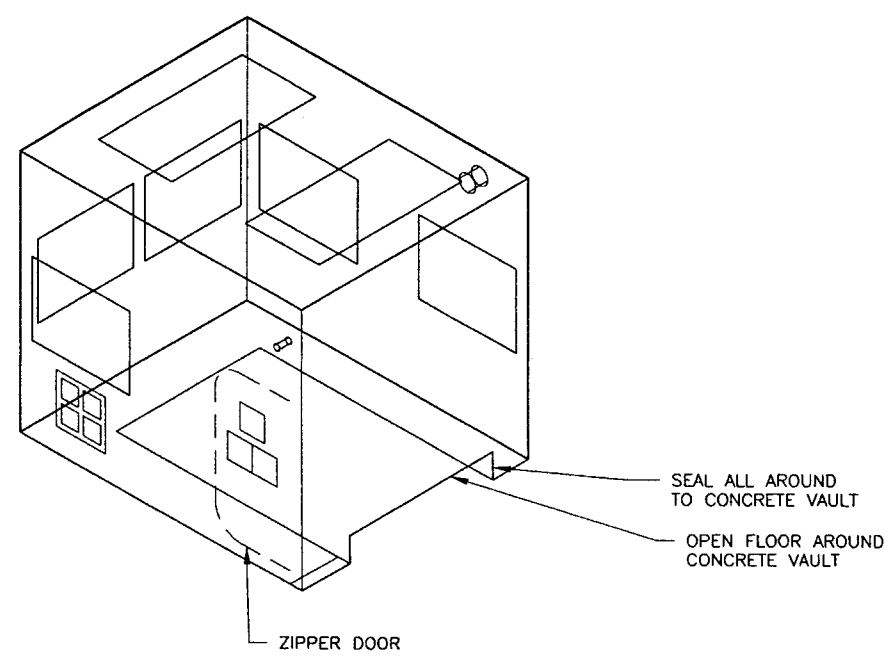


SOUTHEAST VIEW
NTS
NOTE: CHANGING ROOM NOT SHOWN FOR CLARITY

## NOTES

1. SUBCONTRACTOR SHALL ERECT THE TENT WITH DIRECTION FROM THE TENT MANUFACTURER.
2. TENT SHALL BE CONSTRUCTED OF SAFETY YELLOW MATERIAL.
3. EXHAUST VENTILATOR SHALL BE THE FOLLOWING:

   PORTABLE HIGH EFFICIENCY FILTER/BLOWER UNIT PROVIDING HIGH EFFICIENCY PARTICULATE AIR FILTRATION W/THE FOLLOWING ATTRIBUTES:

   INTEGRAL – MOUNTED CYLINDRICAL STAINLESS STEEL FILTER HOUSING AND FRAME ASSEMBLY W/2 WHEELS IN A HAND TRUCK CONFIGURATION

   1 HP, 3450 RPM, 115 VAC, SINGLE PHASE TOTALLY ENCLOSED FAN COOLED MOTOR

   DIRECT DRIVE, NON OVERLOADING BLOWER WITH BACK CURVED BLADES AND ALUMINUM HOUSING AND WHEEL BLOWER DISCHARGE WITH INTEGRAL HAND GUARD.

   FLOW RATES OF 735 CFM AT 1" SPWG AND 580 CFM AT 4" SPWG SHALL BE MODEL SP-700, BY NFSRPS RADIATION PROTECTION SYSTEMS.
4. THE TENT SHALL BE DESIGNED PER:
   WIND LOAD (ASEE 7-98)
   BASIC WIND SPEED (3 SECOND GUST), V=96 MPH
   IMPORTANCE FACTOR, Iw=1.0
   WIND EXPOSURE, CATEGORY C

   BUILDING STRUCTURE SNOW LOAD (ASCE 7-98)
   GROUND SNOW LOAD AT TENT STRUCTURE, Pg=35 PSF

PROFESSIONAL ENGINEER REGISTERED 7166 STATE OF IDAHO EDWARD C. ANDERSON

| | | |
|---|---|---|
| FOR DRAWING INDEX SEE DRAWING NO. 624407 | SUBCONTRACT NO. | INEEL (Idaho National Engineering & Environmental Laboratory) BECHTEL BWXT IDAHO, LLC |
| 1' 0 1' 2' 3' SCALE: 1/2" = 1'-0" | REQUESTER: K ROGERS<br>DESIGN: R VAN VOAST<br>DRAWN: J MONCUR<br>PROJECT NO. 23052<br>SPEC CODE | INEEL<br>OU 3-13 GROUP 7<br>VES-SFE-20 HOT WASTE TANK REMEDIAL DESIGN<br>PHASE I<br>GFE TENT PLAN AND VIEWS |
| DESIGN PHASE: AFC | FOR REVIEW/APPROVAL SIGNATURES SEE DAR NO. 102658 | SIZE D · CAGE CODE 01MF3 · INDEX CODE NUMBER AREA 200 TYPE 0642 QL 22 ORIG 090 · DWG-624425 · REV |
| SAFETY CATEGORY: CG | EFFECTIVE DATE: 6-26-03 | SCALE: NOTED · SHEET V-1 |

File: 624425.DWG
Path: X:\VES-SFE-20 Hot Waste Tank [Date:08/25/03] Wd:h45.FDWG:\PH 1
Layout Name: LAYOUT ID: MKJ

FMT-D1-REV 3.3

| REVISIONS | | |
|---|---|---|
| REV | DESCRIPTION | EFFECTIVE DATE: |

## NOTES

1. REMOVE 2"C W/10 #14 FROM START/STOP PULL BOX IN CPP-674 TO INSTRUMENT PANEL IN CPP-603, 2"C W/3 PR #18 FROM FLOW TRANSMITTERS IN CPP-764 TO INSTRUMENT PANEL IN CPP-603, 3/4"C W/3 #10 FROM HEATERS IN CPP-674 TO LP-SF-265 CKT 10 AND 12, 1 1/4"C W/3 #2, 1 #8 FROM PCC-SFE-628 IN CPP-1617 TO MCC-SPE-327 CKT 2 BR, AND 1"C W/3 #8 FROM WIREWAY IN CPP-642 TO LP-SF-132 CKT 37 AND 39 IN CPP-603.
2. REMOVE 2"C W/3 #2, 1 #8, 6 #12 FROM JUNCTION BOX OUTSIDE CPP-642 TO PCC-SFE-628 AND DSW-628-4, 2"C W/9 #12 FROM JUNCTION BOX OUTSIDE CPP-642 TO LP-SFE-631.
3. REMOVE 2"C W/4 #12 TO PULL BOX IN CPP-764, 2"C W/3 #12, 6 #14 TO PULL BOX IN CPP-764, 2" C W/3 PR #18 TO DSW IN CPP-764, AND 3/4"C W/3 #10 TO RECEPTACLE IN CPP-764.

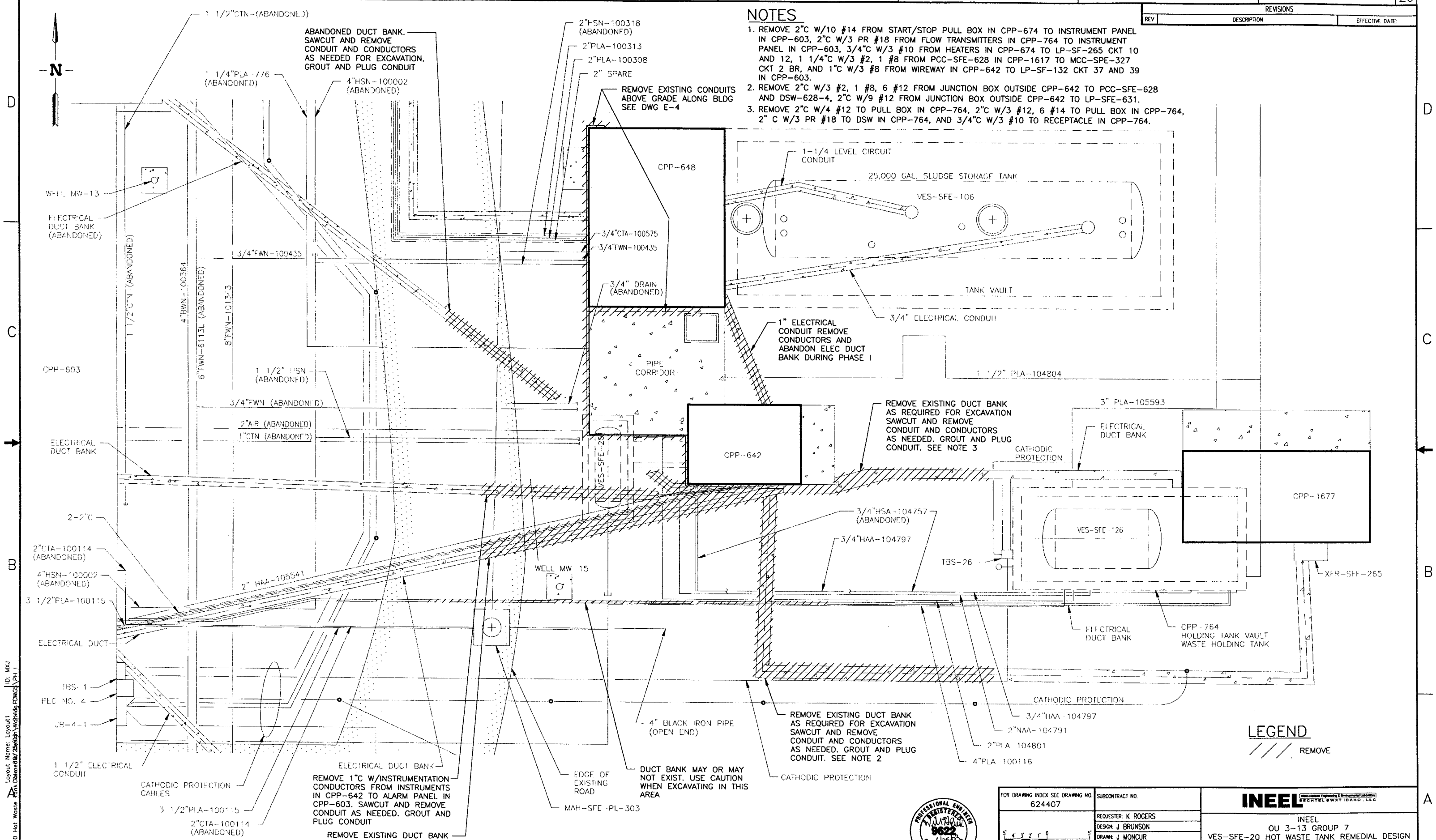


## ELECTRICAL PLAN – DEMOLITION

| | | |
|---|---|---|
| FOR DRAWING INDEX SEE DRAWING NO. 624407 | SUBCONTRACT NO. | INEEL (Idaho National Engineering & Environmental Laboratory) BECHTEL BWXT IDAHO, LLC |
| SCALE: 1" = 5.0' | REQUESTER: K ROGERS | INEEL<br>OU 3-13 GROUP 7<br>VES-SFE-20 HOT WASTE TANK REMEDIAL DESIGN<br>PHASE I<br>ELECTRICAL PLAN – DEMOLITION |
| | DESIGN: J BRUNSON | |
| | DRAWN: J MONCUR | |
| | PROJECT NO. 23052 | |
| | SPEC CODE | |
| DESIGN PHASE: AFC | FOR REVIEW/APPROVAL SIGNATURES SEE DAR NO. 102658 | SIZE D · CAGE CODE 01MF3 · INDEX CODE NUMBER AREA 200 TYPE 0400 CL 10 ORIG 090 · DWG- 624426 · REV |
| SAFETY CATEGORY: CG | EFFECTIVE DATE: 6-26-03 | SCALE: 1"=5'-0" · SHEET E-1 |

PROFESSIONAL ENGINEER REGISTERED 9622 STATE OF IDAHO WILLIAM H. REED 6/25/03

File: 624426.dwg
Path: X:\VES-SFE-20 Hot Waste Tank Remedial Design\Wd\dwg\PDWG\PH I
Layout Name: Layout1 ID: MXJ

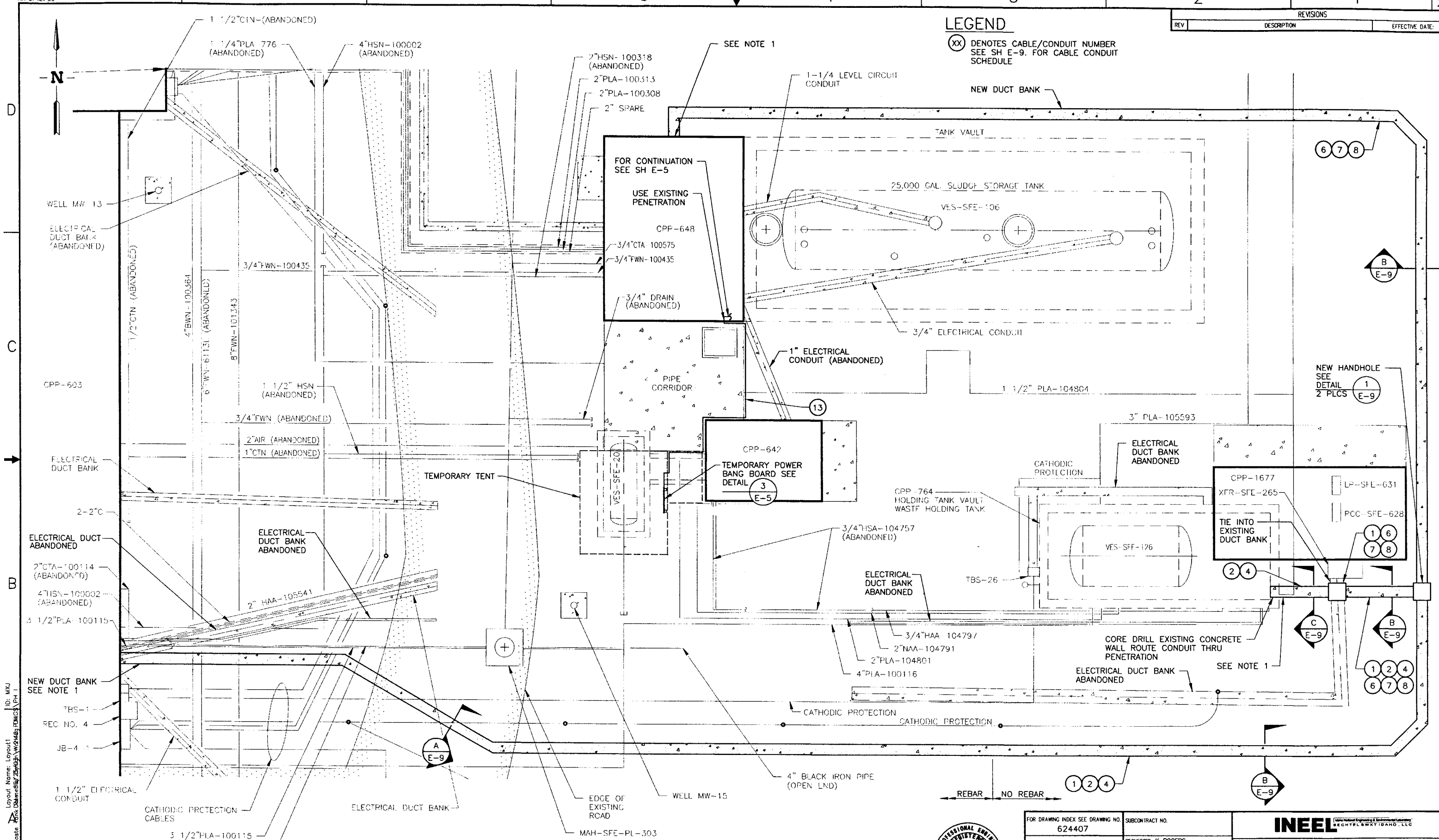


## ELECTRICAL PLAN – INSTALLATION

## NOTES

1. TERMINATE DUCT BANK GROUNDING ELECTRODE CONDUCTOR TO EXISTING BUILDING GROUND RING, IF AVAILABLE. IF NOT AVAILABLE, ROUTE CONDUCTOR INSIDE FACILITY AND BOND TO NEAREST GROUNDING ELECTRODE (I.E. STRUCTURAL STEEL).
2. EXCAVATION LINES NOT SHOWN FOR CLARITY.

PROFESSIONAL ENGINEER REGISTERED 9622 6/25/03 STATE OF IDAHO WILLIAM H. REED

| | | |
|---|---|---|
| FOR DRAWING INDEX SEE DRAWING NO. 624407 | SUBCONTRACT NO. | INEEL |
| SCALE: 1" = 5.0' | REQUESTER: K ROGERS | INEEL OU 3-13 GROUP 7 VES-SFE-20 HOT WASTE TANK REMEDIAL DESIGN PHASE I ELECTRICAL PLAN – INSTALLATION |
| | DESIGN: J BRUNSON | |
| | DRAWN: J MONCUR | |
| | PROJECT NO. 23052 | |
| | SPEC CODE | |
| DESIGN PHASE: AFC | FOR REVIEW/APPROVAL SIGNATURES SEE DAR NO. 102658 | SIZE D · CAGE CODE 01MF3 · INDEX CODE NUMBER AREA 200 TYPE 0400 CL 10 ORIG 090 · DWG- 624427 · REV |
| SAFETY CATEGORY: CG | EFFECTIVE DATE: 6-26-03 | SCALE: 1"=5'-0" · SHEET E-2 |

REVISIONS

| REV | DESCRIPTION | EFFECTIVE DATE: |
|---|---|---|

FMT-D1-REV 3.3

21

File: 624427.dwg Path: X:\VES-SFE-20 Hot Waste Tank Remedial Design\Working Dwgs\PH I ID: MXJ Layout Name: Layout1

| REVISIONS | | |
|---|---|---|
| REV | DESCRIPTION | EFFECTIVE DATE: |

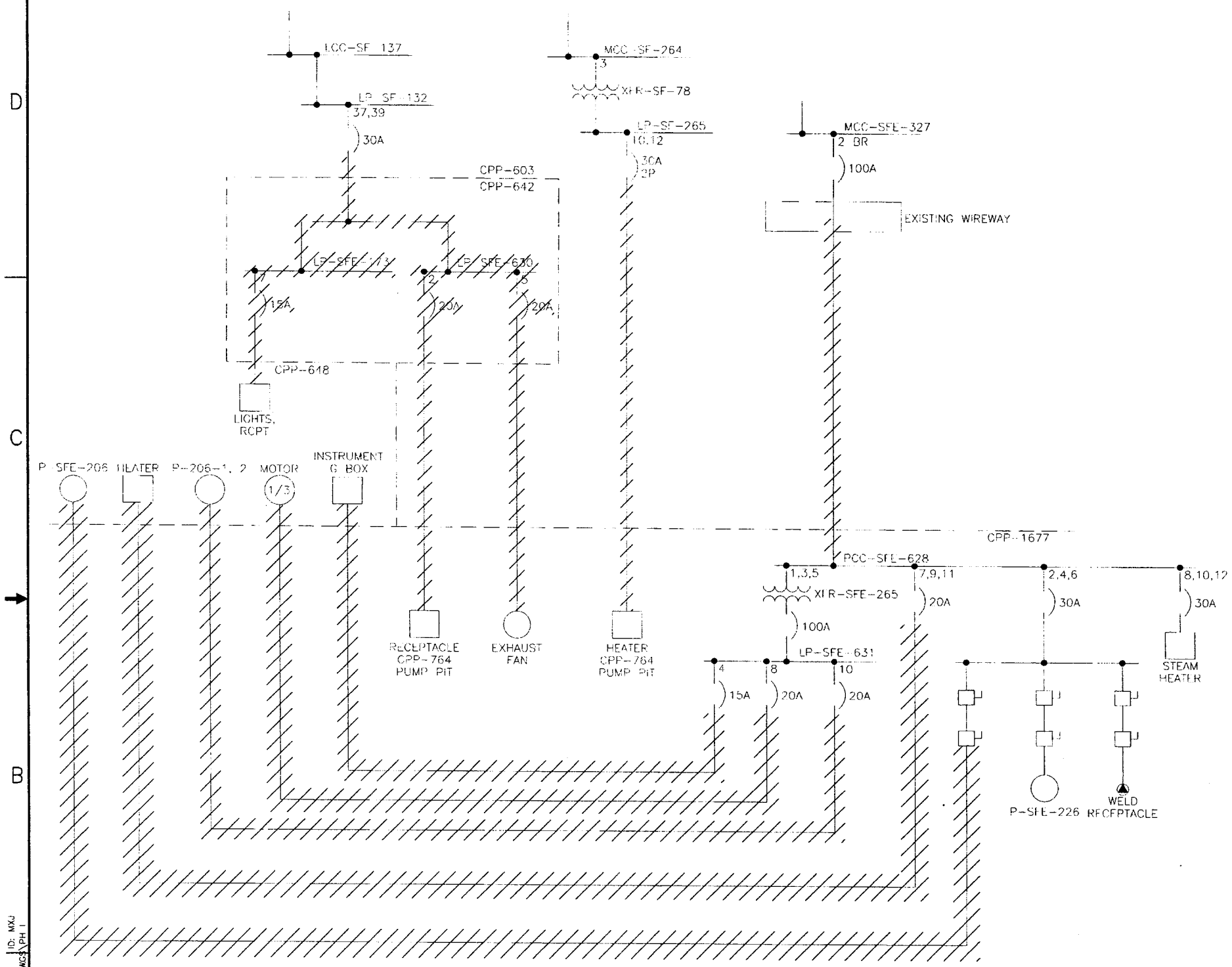


EXISTING PARTIAL ONE LINE DIAGRAM

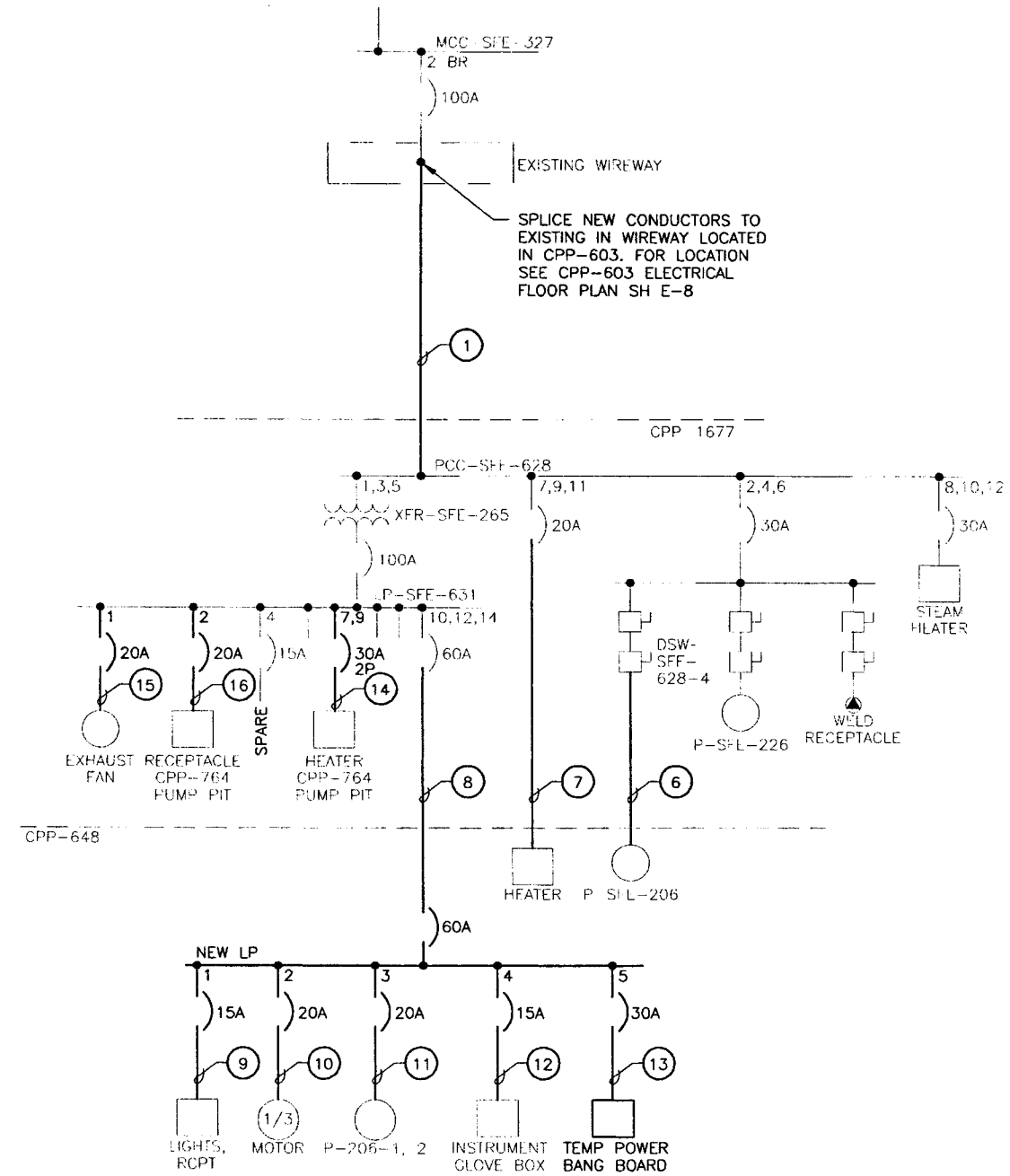


NEW PARTIAL ONE LINE DIAGRAM

## LEGEND

/// REMOVE

## NOTES

1. FOR PANEL LOCATIONS IN CPP-603, SEE SH E-8.
2. FIELD VERIFY ALL CIRCUITS BEFORE DEMOLITION.

PROFESSIONAL ENGINEER — W. H. REED — 9622 — STATE OF IDAHO — 6/25/03

| | | |
|---|---|---|
| FOR DRAWING INDEX SEE DRAWING NO. 624407 | SUBCONTRACT NO. | INEEL (Idaho National Engineering & Environmental Laboratory) BECHTEL BWXT IDAHO, LLC |
| NO SCALE | REQUESTER: K ROGERS<br>DESIGN: J BRUNSON<br>DRAWN: J MONCUR<br>PROJECT NO. 23052<br>SPEC CODE | INEEL<br>OU 3-13 GROUP 7<br>VES-SFE-20 HOT WASTE TANK REMEDIAL DESIGN<br>PHASE I<br>EXISTING AND NEW ONE LINE DIAGRAM |
| DESIGN PHASE: AFC | FOR REVIEW/APPROVAL SIGNATURES SEE DAR NO. 102658 | SIZE: D — CAGE CODE: 01MF3 — INDEX CODE NUMBER: AREA 200, TYPE 0400, CL 10, ORIG 090 — DWG-624428 — REV |
| SAFETY CATEGORY: CG | EFFECTIVE DATE: 6-26-03 | SCALE: NONE — SHEET E-3 |

File: 624428.dwg
Path: X:\VES-SFE-20 Hot Waste Tank Dataset\Wd9469\DWGS\PH 1
Layout Name: Layout1 | ID: MKJ

| REVISIONS | | |
|---|---|---|
| REV | DESCRIPTION | EFFECTIVE DATE |

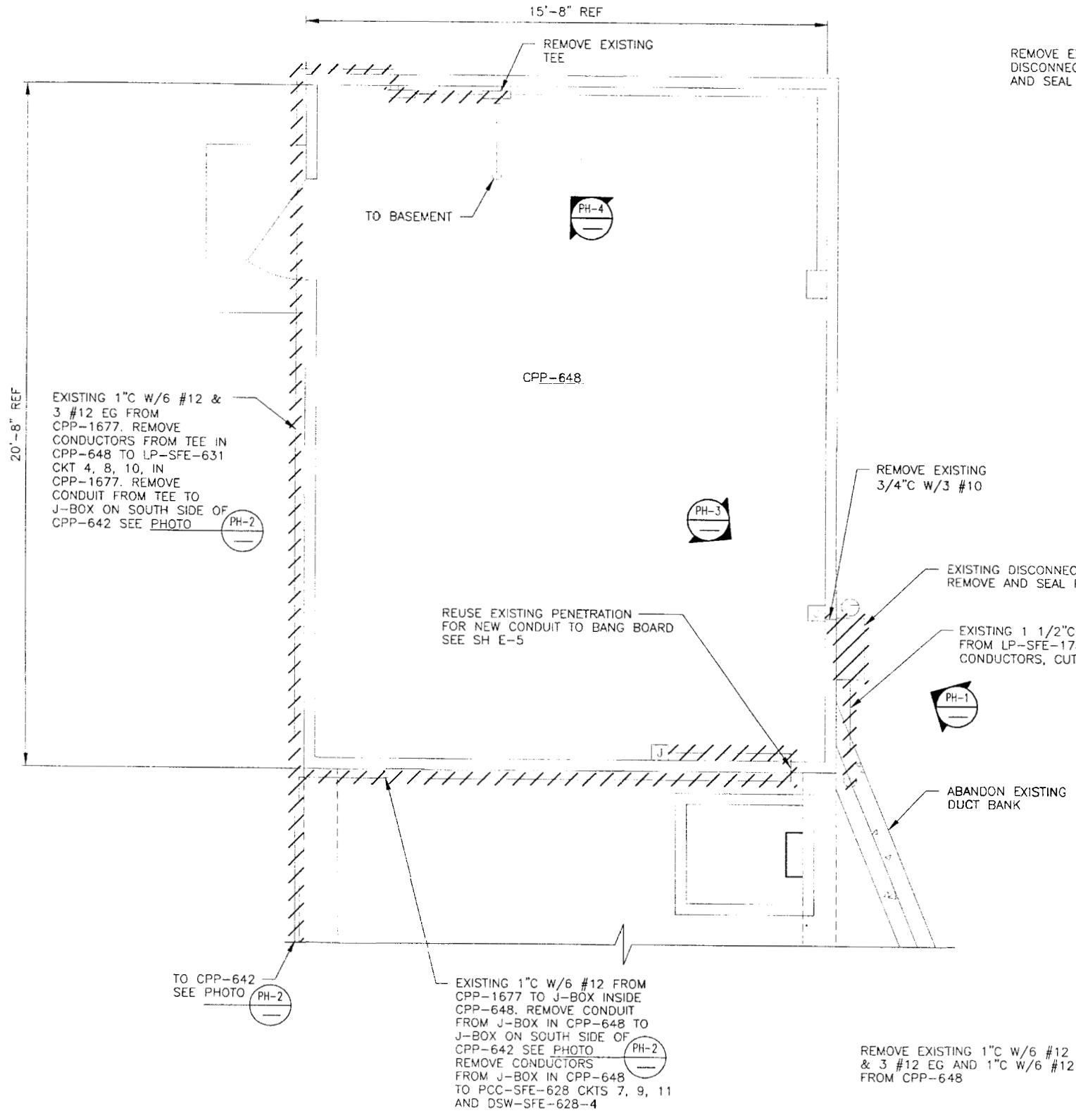


## CPP-648 PLAN – DEMOLITION

SCALE: 1/2"=1'-0"

PHOTO PH-1

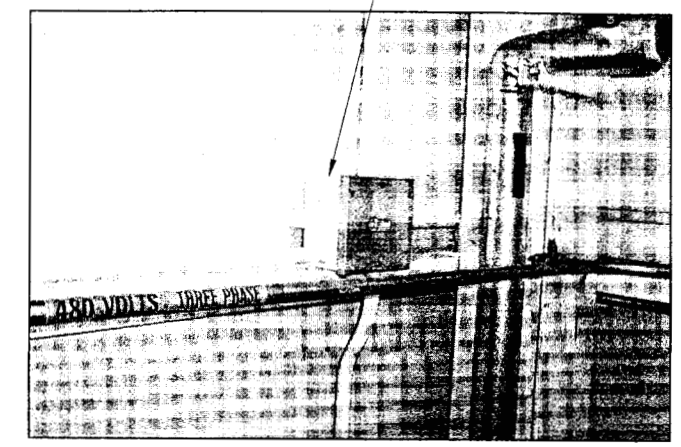


PHOTO PH-3

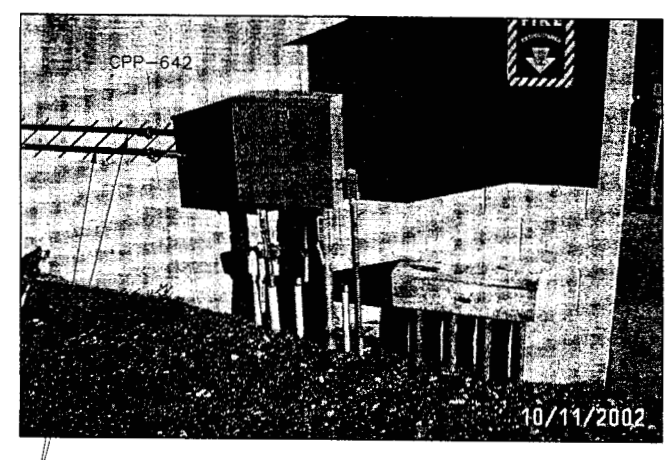


PHOTO PH-2

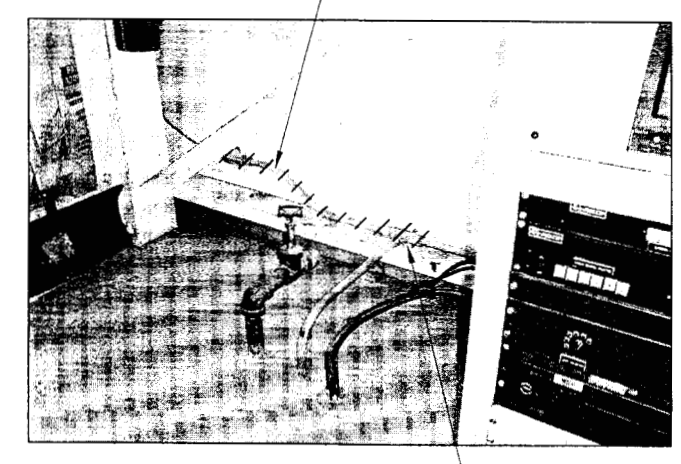


PHOTO PH-4

LEGEND

REMOVE

PROFESSIONAL ENGINEER REGISTERED 9622 9/29/03 STATE OF IDAHO WILLIAM H. REED

| INDEX CODE NUMBER | | | |
|---|---|---|---|
| AREA | TYPE | GL | ORIG |

| | |
|---|---|
| FOR DRAWING INDEX SEE DRAWING NO. 624407 | SUBCONTRACT NO. |
| SCALE: 1/2" = 1'-0" | REQUESTER: K ROGERS |
| | DESIGN: J BRUNSON |
| | DRAWN: J MONCUR |
| | PROJECT NO. 23052 |
| | SPEC CODE |
| DESIGN PHASE: AFC | FOR REVIEW/APPROVAL SIGNATURES SEE DAR NO. 102658 |

INEEL Idaho National Engineering & Environmental Laboratory BECHTEL BWXT IDAHO, LLC

INEEL
OU 3-13 GROUP 7
VES-SFE-20 HOT WASTE TANK REMEDIAL DESIGN
PHASE I
CPP-648 PLAN AND PHOTOS – DEMOLITION

| SIZE | CAGE CODE | INDEX CODE NUMBER | | | | DWG- | REV |
|---|---|---|---|---|---|---|---|
| | | AREA | TYPE | GL | ORIG | | |
| D | 01MF3 | 200 | 0648 | 10 | 090 | 624429 | |

Layout Name: D Size
Plot Date/Time: 9/29/2003 1:29:40 PM
Plot Scale: 1:1
Plot Device: HP DesignJet 1055CM PS.pc3
Plot Style: Monochrome.ctb
Plot Stamp Enabled: No
Drawing: \VES-SFE-20 Hot Waste Tank Remedial Design\4429.dwg

| REVISIONS | | |
|---|---|---|
| REV | DESCRIPTION | EFFECTIVE DATE: |

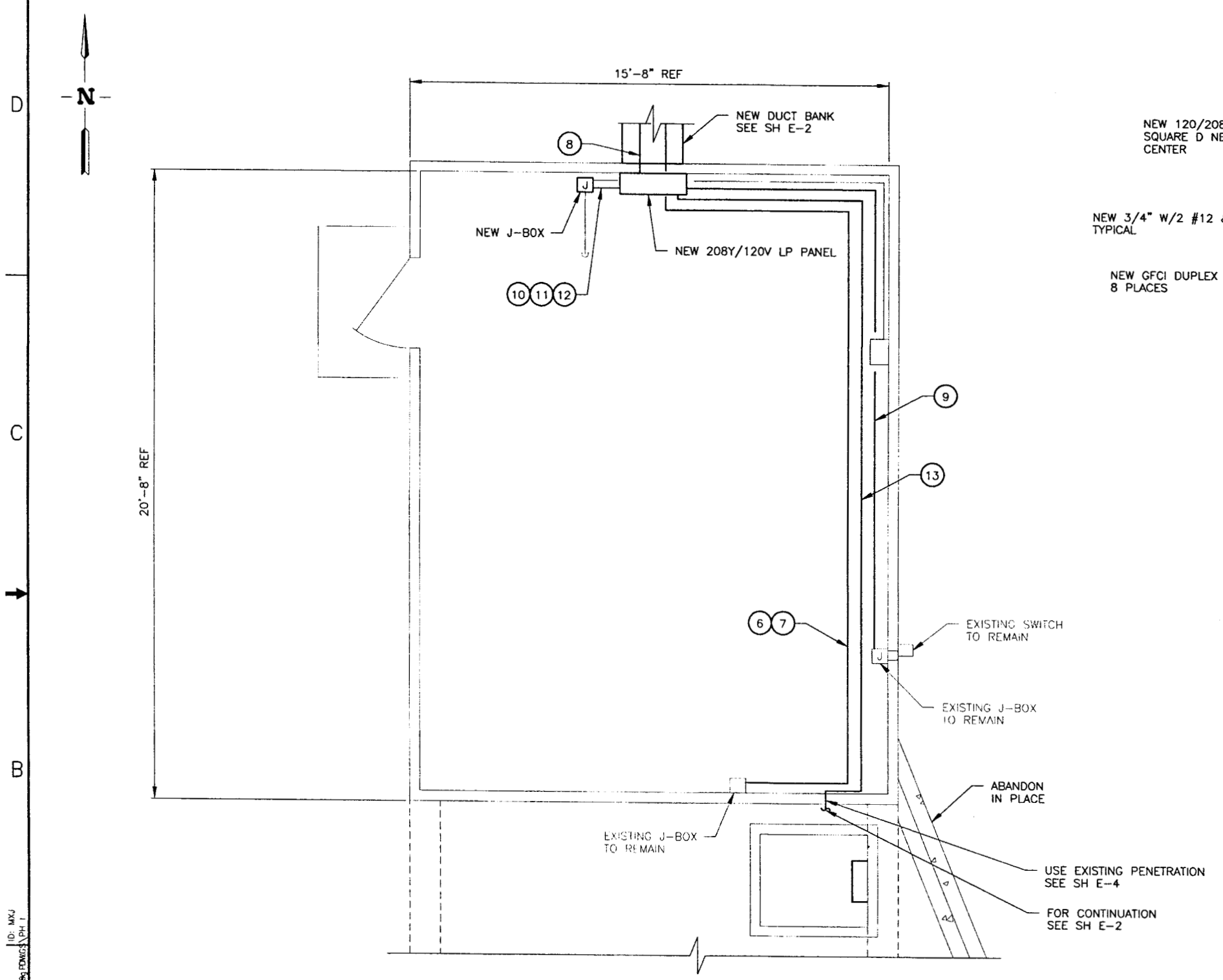


## CPP-648 PLAN – INSTALLATION

SCALE: 1/2"=1'-0"

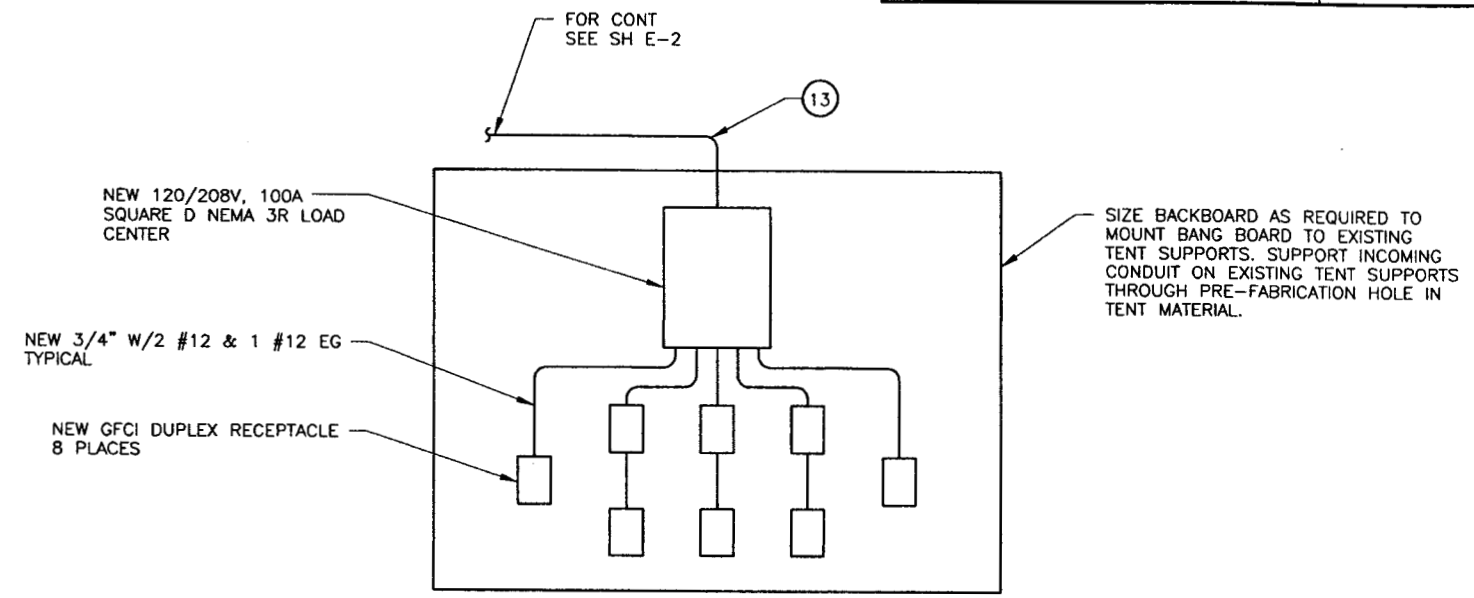


## TEMPORARY POWER DETAIL (3 / E-2)

NTS

PANEL LP LOCATION CPP-648

AMPS 60 MAIN 100 WIRE TYPE

VOLTAGE FEED 208Y/120 MOUNTING SURFACE DIM.

| BRANCH CIRCUIT | LINE | LOAD WATTS | AMP TRIP | CKT NO. | A B C | CKT NO. | AMP TRIP | LOAD WATTS | LINE | BRANCH CIRCUIT |
|---|---|---|---|---|---|---|---|---|---|---|
| LIGHTS, RCPT CPP-648 | A | | 15 | 1 | | 2 | 20 | 350 | A | 1/3 HP MOTOR |
| P-206-1, P-206-2 | B | 500 | 20 | 3 | | 4 | 15 | 360 | B | INSTRUMENT GLOVE BOX |
| TEMP POWER | C | 1440 | 30 | 5 | | 6 | | | C | SPACE |
| SPACE | A | | | 7 | | 8 | | | A | SPACE |
| SPACE | B | | | 9 | | 10 | | | B | SPACE |
| SPACE | C | | | 11 | | 12 | | | C | SPACE |
| SPACE | A | | | 13 | | 14 | | | A | SPACE |
| SPACE | B | | | 15 | | 16 | | | B | SPACE |
| SPACE | C | | | 17 | | 18 | | | C | SPACE |
| SPACE | A | | | 19 | | 20 | | | A | SPACE |
| SPACE | B | | | 21 | | 22 | | | B | SPACE |
| SPACE | C | | | 23 | | 24 | | | C | SPACE |
| SPACE | A | | | 25 | | 26 | | | A | SPACE |
| SPACE | B | | | 27 | | 28 | | | B | SPACE |

TOTAL LOAD/PHASE-WATTS A 350 B 860 C 1440 FED

AMPS/PHASE A 2.9167 B 7.1667 C 12 FROM

WIRE SIZE CONDUIT SIZE

SHORT CIRCUIT INTERRUPTING CAPACITY

## LEGEND

(XX) DENOTES CABLE/CONDUIT NUMBER SEE SH E-9. FOR CABLE CONDUIT SCHEDULE

PROFESSIONAL ENGINEER REGISTERED 9622 6/25/03 STATE OF IDAHO WILLIAM H. REED

| | | |
|---|---|---|
| FOR DRAWING INDEX SEE DRAWING NO. 624407 | SUBCONTRACT NO. | INEEL Idaho National Engineering & Environmental Laboratory BECHTEL BWXT IDAHO, LLC |
| SCALE: 1/2" = 1'-0" | REQUESTER: K ROGERS<br>DESIGN: J BRUNSON<br>DRAWN: J MONCUR<br>PROJECT NO. 23052<br>SPEC CODE | INEEL<br>OU 3-13 GROUP 7<br>VES-SFE-20 HOT WASTE TANK REMEDIAL DESIGN<br>PHASE I<br>CPP-648 PLAN AND DETAIL – INSTALLATION |
| DESIGN PHASE: AFC | FOR REVIEW/APPROVAL SIGNATURES SEE DAR NO. 102658 | SIZE D CAGE CODE 01MF3 INDEX CODE NUMBER AREA 200 TYPE 0648 CL 10 ORIG 090 DWG-624430 REV |
| SAFETY CATEGORY: CG | EFFECTIVE DATE: 6-26-03 | SCALE: NOTED SHEET E-5 |

File: 624430.dwg Path: X:\VES-SFE-20 Hot Waste Tank Remedial Design\Working Dwgs\PH I Layout Name: D Size ID: MXJ

| REVISIONS | | |
|---|---|---|
| REV | DESCRIPTION | EFFECTIVE DATE: |

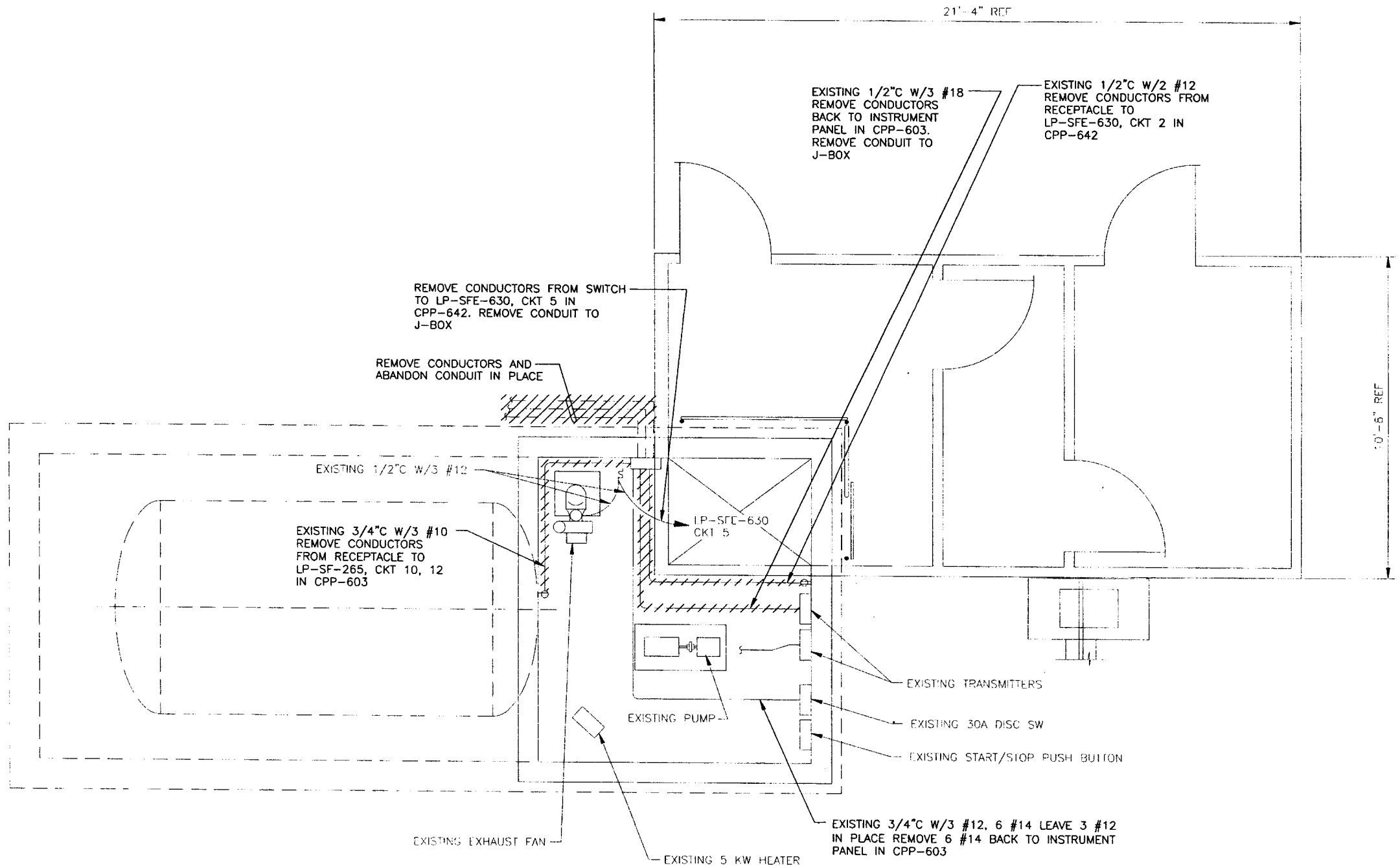


## CPP-764 AND 1677 FLOOR PLANS – DEMOLITION

SCALE 1/2"=1'-0"

LEGEND

REMOVE

PROFESSIONAL ENGINEER REGISTERED 9622 STATE OF IDAHO WILLIAM H. REED 4/25/03

| INDEX CODE NUMBER | | | |
|---|---|---|---|
| AREA | TYPE | CL | ORIG |
| 200 | 1617 | 10 | 090 |

| | |
|---|---|
| FOR DRAWING INDEX SEE DRAWING NO. 624407 | SUBCONTRACT NO. |
| SCALE: 1/2" = 1'-0" | REQUESTER: K ROGERS |
| | DESIGN: J BRUNSON |
| | DRAWN: J MONCUR |
| | PROJECT NO. 23052 |
| | SPEC CODE |
| DESIGN PHASE: AFC | FOR REVIEW/APPROVAL SIGNATURES SEE DAR NO. 102658 |
| SAFETY CATEGORY: CG | EFFECTIVE DATE: 6-26-03 |

INEEL
Idaho National Engineering & Environmental Laboratory
BECHTEL BWXT IDAHO, LLC

INEEL
OU 3-13 GROUP 7
VES-SFE-20 HOT WASTE TANK REMEDIAL DESIGN
PHASE I
CPP-764 AND 1677 FLOOR PLANS – DEMOLITION

| SIZE | CAGE CODE | INDEX CODE NUMBER | | | | DWG- | REV |
|---|---|---|---|---|---|---|---|
| | | AREA | TYPE | CL | ORIG | | |
| D | 01MF3 | 200 | 0764 | 10 | 090 | 624431 | |

SCALE: NONE SHEET E-6

File: 624431.dwg Layout Name: Layout1 ID: MXJ
Path: X:\VES-SFE-20 Hot Waste Tank Remedial Design\Drawings\Working\PDMG\PH I

| REVISIONS | | |
|---|---|---|
| REV | DESCRIPTION | EFFECTIVE DATE: |

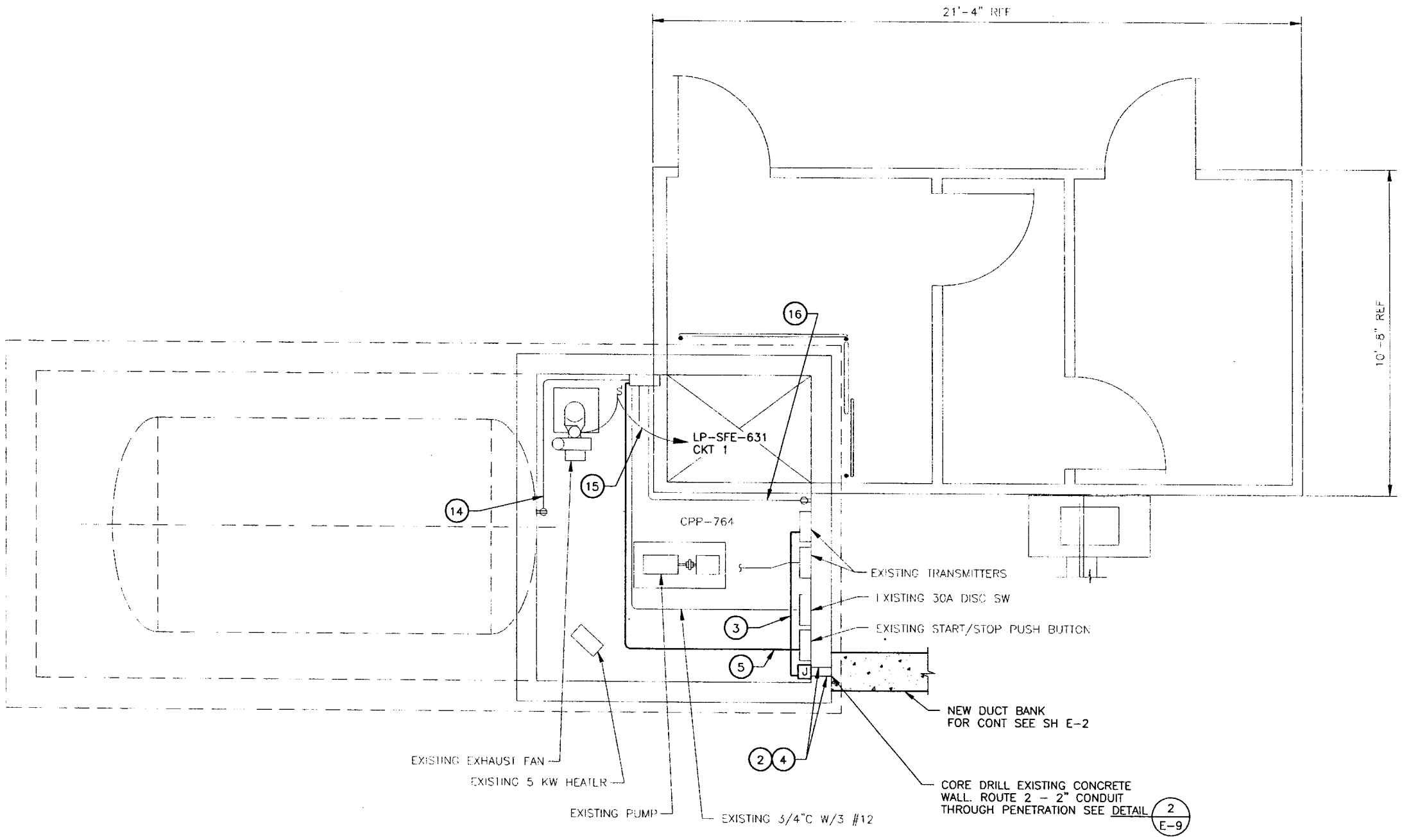


## CPP-764 AND 1677 FLOOR PLANS - INSTALLATION

SCALE 1/2"=1'-0"

## LEGEND

(XX) DENOTES CABLE/CONDUIT NUMBER SEE SH E-9. FOR CABLE CONDUIT SCHEDULE

PROFESSIONAL ENGINEER REGISTERED 9622 STATE OF IDAHO WILLIAM H. REED 6/25/03

| INDEX CODE NUMBER | | | |
|---|---|---|---|
| AREA | TYPE | CL | ORIG |
| 200 | 1677 | 10 | 090 |

FOR DRAWING INDEX SEE DRAWING NO. 624407

SCALE: 1/2" = 1'-0"

DESIGN PHASE: AFC

SAFETY CATEGORY: CG

SUBCONTRACT NO.

REQUESTER: K ROGERS

DESIGN: J BRUNSON

DRAWN: J MONCUR

PROJECT NO. 23052

SPEC CODE

FOR REVIEW/APPROVAL SIGNATURES SEE DAR NO. 102658

EFFECTIVE DATE: 6-26-03

INEEL (Idaho National Engineering & Environmental Laboratory) BECHTEL BWXT IDAHO, LLC

INEEL
OU 3-13 GROUP 7
VES-SFE-20 HOT WASTE TANK REMEDIAL DESIGN
PHASE I
CPP-764 AND 1677 FLOOR PLANS - INSTALLATION

| SIZE | CAGE CODE | INDEX CODE NUMBER | | | | DWG- | REV |
|---|---|---|---|---|---|---|---|
| | | AREA | TYPE | CL | ORIG | | |
| D | 01MF3 | 200 | 0674 | 10 | 090 | 624432 | |

SCALE: NONE

SHEET E-7

File: 624432.dwg
Path: X:\VES-SFE-20 Hot Waste Tank Remediation\Design\Working\PDMG3\PH 1
Layout Name: Layout1
ID: MXJ

| REVISIONS | | |
|---|---|---|
| REV | DESCRIPTION | EFFECTIVE DATE: |

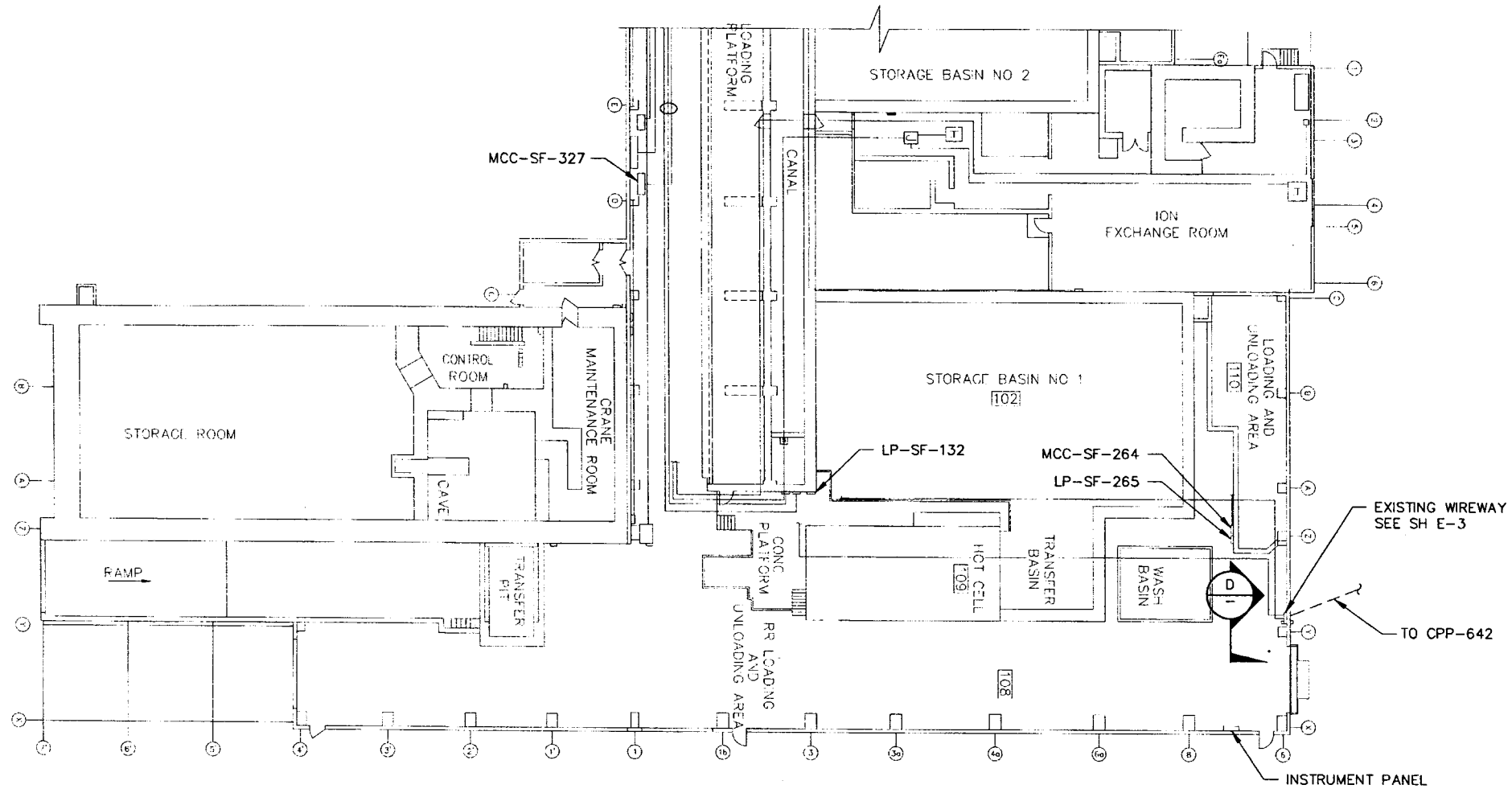


## CPP-603 ELECTRICAL FLOOR PLAN

SCALE 1/16"=1'-0"

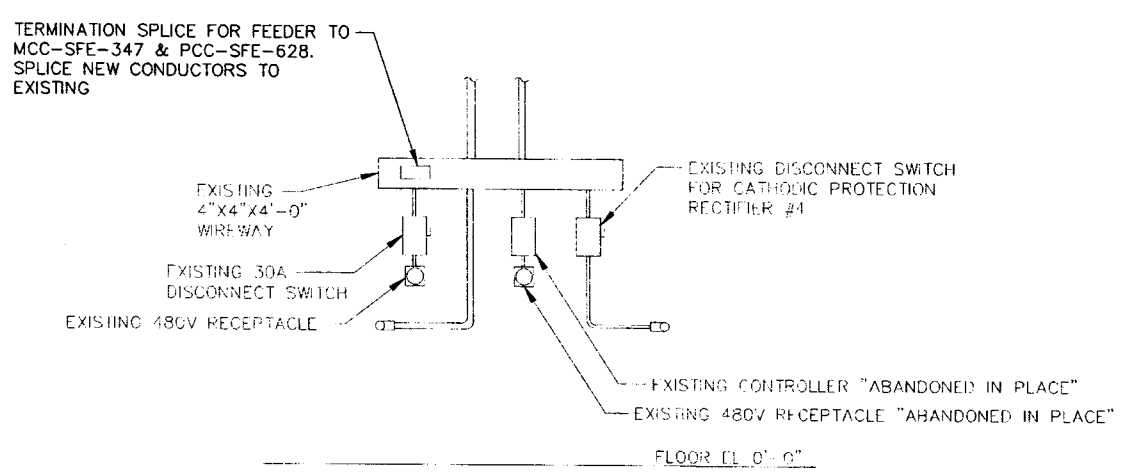


VIEW D
SCALE: NTS

PROFESSIONAL ENGINEER REGISTERED 9622 STATE OF IDAHO WILLIAM H. REED 6/25/03

| | | |
|---|---|---|
| FOR DRAWING INDEX SEE DRAWING NO. 624407 | SUBCONTRACT NO. | INEEL (Idaho National Engineering & Environmental Laboratory) LOCKHEED MARTIN IDAHO, LLC. |
| 1'0" 3' 5' 10' 20' SCALE: 1/16" = 1'-0" | REQUESTER: K ROGERS | INEEL OU 3-13 GROUP 7 VES-SFE-20 HOT WASTE TANK REMEDIAL DESIGN PHASE I CPP-603 ELECTRICAL FLOOR PLAN AND VIEW |
| | DESIGN: J BRUNSON | |
| | DRAWN: J MONCUR | |
| | PROJECT NO. 23052 | |
| | SPEC CODE | |
| DESIGN PHASE: AFC | FOR REVIEW/APPROVAL SIGNATURES SEE DAR NO. 102658 | SIZE D; CAGE CODE 01MF3; INDEX CODE NUMBER AREA 200, TYPE 0603, Q 10, ORIG 090; DWG-624433; REV |
| SAFETY CATEGORY: CG | EFFECTIVE DATE: 6-26-03 | SCALE: NOTED; SHEET E-8 |

File: 624433.dwg ID: MXJ Layout Name: Layout1
Path: X:\VES-SFE-20 Hot Waste Tank Dataset\By Dwg\Dwg\VES-SFE-20 FDWG3\PH 1

| REVISIONS | | |
|---|---|---|
| REV | DESCRIPTION | EFFECTIVE DATE: |

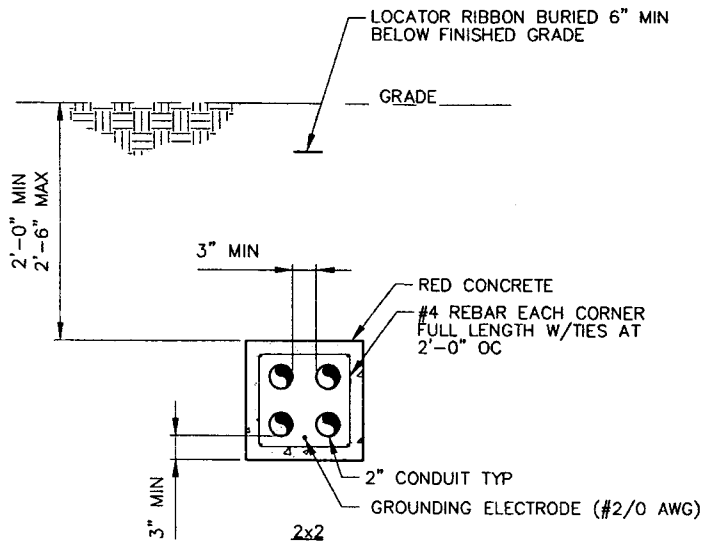


DUCT BANK SECTION (A / E-2)

SCALE" 1"=1'-0"

## CABLE SCHEDULE

| CABLE NO. | FROM DEVICE | FROM BUILDING | TO DEVICE | TO BUILDING | CONDUCTOR PHASE | CONDUCTOR NEUTRAL | CONDUCTOR GND | CONDUIT SIZE | REMARK |
|---|---|---|---|---|---|---|---|---|---|
| 1 | MCC-SFE-327, CKT 2 BR | CPP-603 | PCC-SFE-628 | CPP-1677 | 3 #2 | 1 #2 | 1 #8 | 2" | IN DUCT BANK |
| 2 | INSTRUMENT PANEL | CPP-603 | NEW J-BOX | CPP-764 | 3 PR #18 | | | 2" | IN DUCT BANK |
| 3 | NEW J-BOX | CPP-764 | FLOW TRANSMITTERS | CPP-764 | 3 PR #18 | | | 3/4" | |
| 4 | INSTRUMENT PANEL | CPP-603 | NEW J-BOX | CPP-764 | 10 #14 | | | 2" | IN DUCT BANK |
| 5 | NEW J-BOX | CPP-764 | START/STOP PUSH BUTTON | CPP-764 | 10 #14 | | | 1" | SPLICE NEW CONDUCTORS TO EXISTING |
| 6 | DSW-SFE-628-4 | CPP-1677 | J-BOX | CPP-648 | 3 #12 | | 1 #12 | 2" | IN DUCT BANK. SPLICE TO EXISTING CONDUCTORS IN J-BOX IN SAME CONDUIT W/7 |
| 7 | PCC-SFE-628, CKT 7,9,11 | CPP-1677 | J-BOX | CPP-648 | 3 #12 | | 1 #12 | 2" | IN DUCT BANK. SPLICE TO EXISTING CONDUCTORS IN J-BOX IN SAME CONDUIT W/8 |
| 8 | LP-SFE-631, CKT 10,12,14 | CPP-1677 | NEW PANEL | CPP-648 | 3 #4 | 1 #4 | 1 #8 | 2" | IN DUCT BANK |
| 9 | NEW PANEL, CKT 1 | CPP-648 | J-BOX | CPP-648 | 2 #10 | 1 #10 | 1 #10 | 1" | SPLICE TO EXISTING CONDUCTORS IN NEW J-BOX |
| 10 | NEW PANEL, CKT 2 | CPP-648 | NEW J-BOX | CPP-648 | 1 #12 | 1 #12 | 1 #12 | 1" | SPLICE TO EXISTING CONDUCTORS IN NEW J-BOX |
| 11 | NEW PANEL, CKT 3 | CPP-648 | NEW J-BOX | CPP-648 | 1 #12 | 1 #12 | 1 #12 | 1" | SPLICE TO EXISTING CONDUCTORS IN NEW J-BOX |
| 12 | NEW PANEL, CKT 4 | CPP-648 | NEW J-BOX | CPP-648 | 1 #12 | 1 #12 | 1 #12 | 1" | SPLICE TO EXISTING CONDUCTORS IN NEW J-BOX |
| 13 | NEW PANEL, CKT 5 | CPP-648 | TEMP POWER | TENT | 1 #10 | 1 #10 | 1 #10 | 1" | |
| 14 | LP-SFE-631, CKT 7,9 | CPP-1677 | HEATER | CPP-764 | 1 #10 | 1 #10 | 1 #10 | 3/4" | UTILIZE EXISTING CONDUIT WHERE POSSIBLE |
| 15 | LP-SFE-631, CKT 1 | CPP-1677 | EXHAUST FAN | CPP-764 | 1 #12 | 1 #12 | 1 #12 | 3/4" | UTILIZE EXISTING CONDUIT WHERE POSSIBLE |
| 16 | LP-SFE-631, CKT 2 | CPP-1677 | RECEPTACLE | CPP-764 | 1 #12 | 1 #12 | 1 #12 | 3/4" | UTILIZE EXISTING CONDUIT WHERE POSSIBLE |

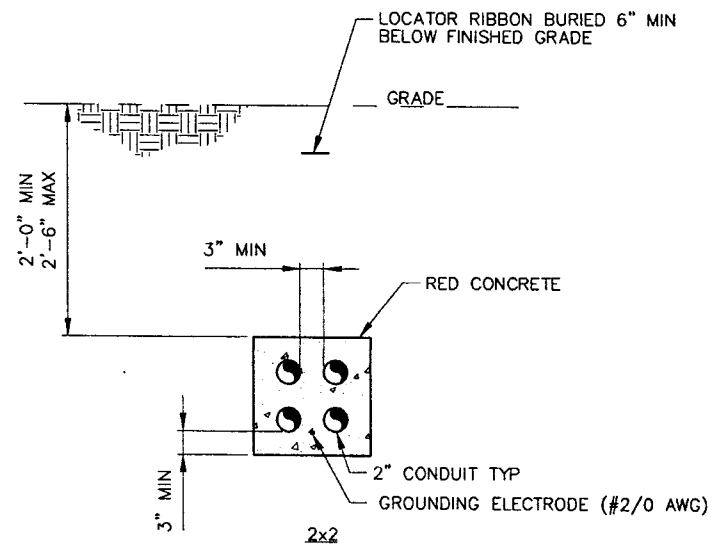


DUCT BANK SECTION (B / E-2)

SCALE" 1"=1'-0"

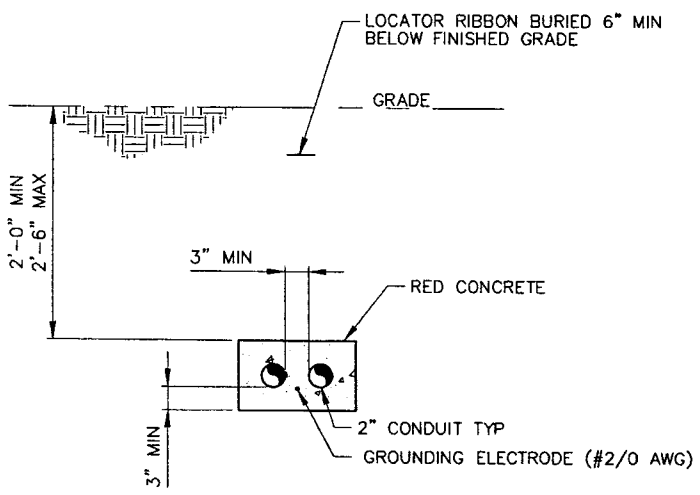


DUCT BANK SECTION (C / E-2)

SCALE" 1"=1'-0"

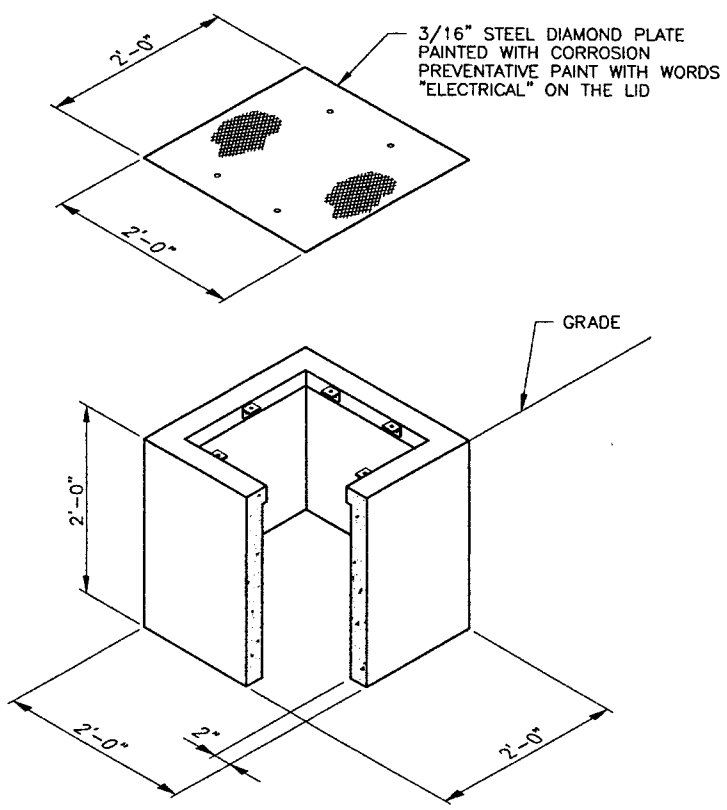


HANDHOLE DETAIL (1 / E-2)

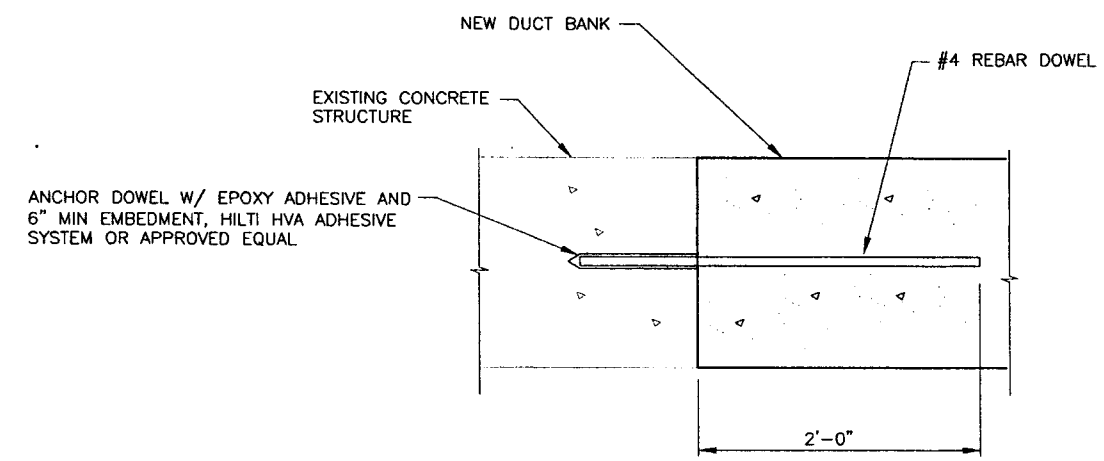


DOWEL DETAIL (2 / E-7)

SCALE: 1 1/2" = 1'-0"

PROFESSIONAL ENGINEER REGISTERED 9622 STATE OF IDAHO WILLIAM H. REED 6/25/03

| | | |
|---|---|---|
| FOR DRAWING INDEX SEE DRAWING NO. 624407 | SUBCONTRACT NO. | INEEL — Idaho National Engineering & Environmental Laboratory — BECHTEL BWXT IDAHO, LLC |
| SCALE: 1" = 1'-0" / SCALE: 1/2" = 1'-0" | REQUESTER: K ROGERS | INEEL OU 3-13 GROUP 7 VES-SFE-20 HOT WASTE TANK REMEDIAL DESIGN PHASE I DETAILS AND CABLE SCHEDULE |
| | DESIGN: J BRUNSON | |
| | DRAWN: J MONCUR | |
| | PROJECT NO. 23052 | |
| | SPEC CODE | |
| DESIGN PHASE: AFC | FOR REVIEW/APPROVAL SIGNATURES SEE DAR NO. 102658 | SIZE D; CAGE CODE 01MF3; INDEX CODE NUMBER AREA 200, TYPE 0400, CL 10, ORIG 090; DWG-624434; REV |
| SAFETY CATEGORY: CG | EFFECTIVE DATE: 6-26-03 | SCALE: NOTED; SHEET E-9 |

File: 624434.dwg
Path: X:\VES-SFE-20 Hot Waste Tank Remediation\Design\Drawings\PH 1
Layout Name: Layout1 | ID: MXJ

**Attachment 2**
**Phase II Drawings**

# Attachment 2

## Construction Drawings-VES-SFE-20 Hot Waste Tank Remedial Design – Phase II

## Drawings 624435 through 624449 8 7/18/03 cparke

FMT-D1-REV 3.3

| REVISIONS | | |
|---|---|---|
| REV | DESCRIPTION | EFFECTIVE DATE: |

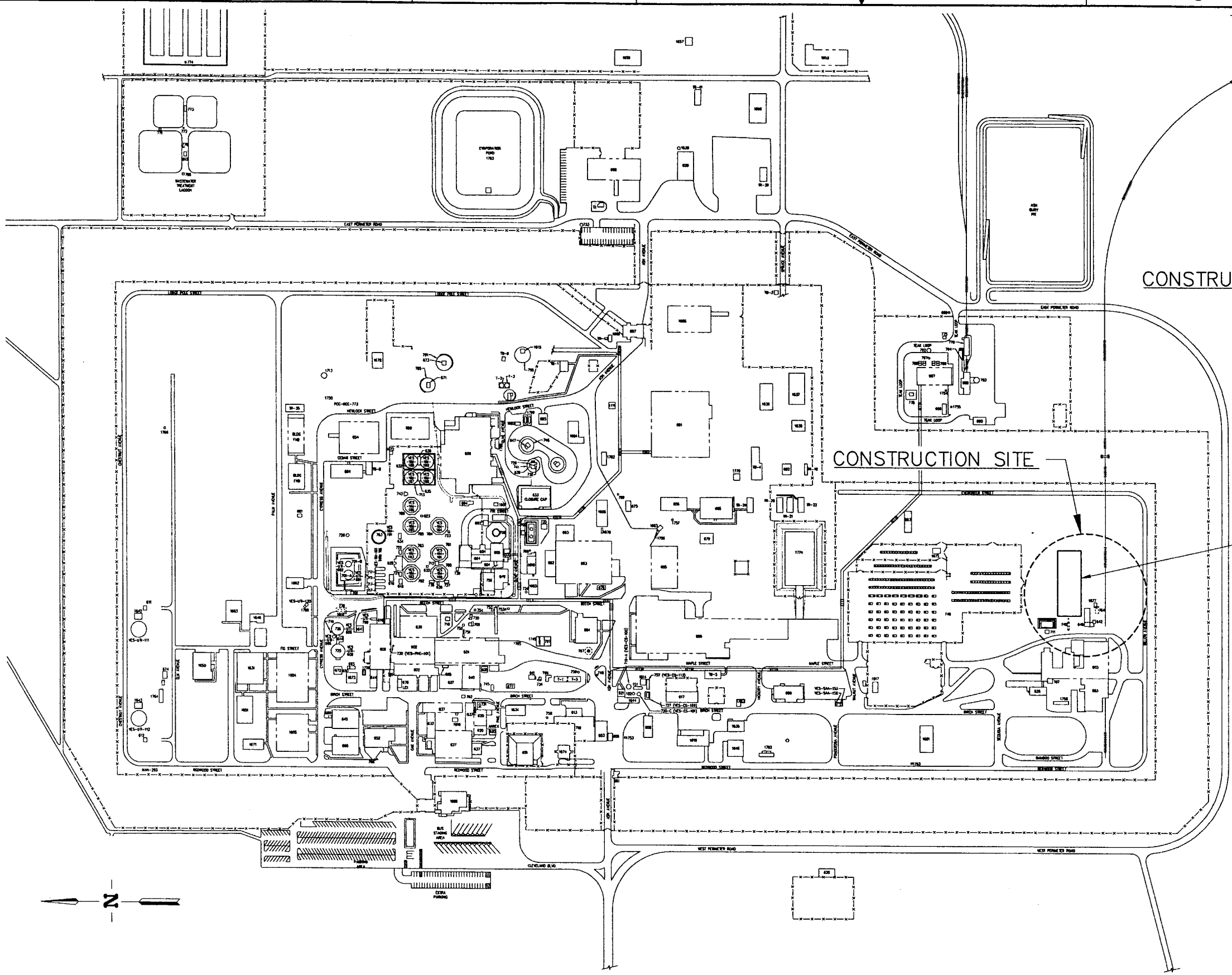


INTEC AREA MAP

SCALE: 1"=200.0'
BASED ON SITE SPECIFIC DATUM

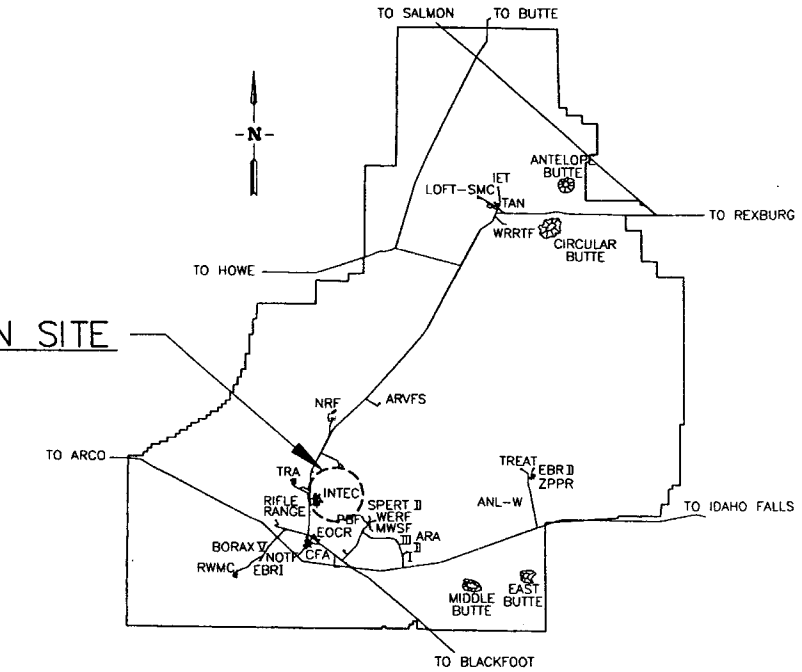


INEEL SITE MAP

SCALE: NONE

## DRAWING INDEX

| PAGE NO. | DWG NO. | A-E DWG NO. | REV | DRAWING TITLE |
|---|---|---|---|---|
| 1 | 624435 | T-1 | | SITE AND AREA MAPS AND DRAWING INDEX |
| 2 | 624436 | T-2 | | LEGEND, ABBREVIATIONS AND GENERAL NOTES |
| 3 | 624437 | C-1 | | EXCAVATION PLAN AND ESTIMATED QUANTITIES |
| 4 | 624438 | C-2 | | PLAN AND PROFILE |
| 5 | 624439 | C-3 | | PLAN AND PROFILE |
| 6 | 624440 | C-4 | | DETAILS AND SECTION |
| 7 | 624441 | C-5 | | PLAN AND SECTIONS - DEMOLITION |
| 8 | 624442 | S-1 | | PLANS, SECTIONS AND DETAIL |
| 9 | 624443 | P-1 | | PIPING PLOT PLAN - DEMOLITION |
| 10 | 624444 | P-2 | | P&ID - DEMOLITION |
| 11 | 624445 | P-3 | | PLANS AND SECTION - DEMOLITION |
| 12 | 624446 | P-4 | | SECTION - DEMOLITION |
| 13 | 624447 | P-5 | | PIPE CORRIDOR PIPING PLAN - DEMOLITION |
| 14 | 624448 | E-1 | | PIPE CORRIDOR - DEMOLITION |

FOR DRAWING INDEX SEE DRAWING NO. 624435

200' 100' 50' 0 200'
SCALE: 1" = 200.0'

DESIGN PHASE: AFC
SAFETY CATEGORY: CG

SUBCONTRACT NO.

REQUESTER: K ROGERS
DESIGN: K FRITZ
DRAWN: J MONCUR
PROJECT NO. 23052
SPEC CODE
FOR REVIEW/APPROVAL SIGNATURES SEE DAR NO. 102658
EFFECTIVE DATE: 6-26-03

INEEL Idaho National Engineering & Environmental Laboratory BECHTEL BWXT IDAHO, LLC

INEEL
OU 3-13 GROUP 7
VES-SFE-20 HOT WASTE TANK REMEDIAL DESIGN
PHASE II
SITE AND AREA MAPS AND DRAWING INDEX

| SIZE | CAGE CODE | INDEX CODE NUMBER: AREA | TYPE | CL | ORIG | DWG-624435 | REV |
|---|---|---|---|---|---|---|---|
| D | 01MF3 | 200 | 0100 | 01 | 090 | | |

SCALE: NOTED
SHEET T-1

File: 624435.dwg
Path: X:\VES-SFE-20 Hot Waste Tank Demolition\Drawings\Working\PDMG3\PH II
Layout Name: Layout1
ID: MXJ

FMT-01-REV 3.2

| REVISIONS | | |
|---|---|---|
| REV | DESCRIPTION | EFFECTIVE DATE: |

## SYMBOL KEY

- SECTION LETTER (A) / A/E SHEET REFERENCE (A-1)
- VIEW OR ELEVATION LETTER (A) / A/E SHEET REFERENCE (A-1)
- DETAIL NUMBER (1) / SAME SHEET REFERENCE
- 6"WCN-106108 — EXISTING UNDERGROUND UTITILIES, SEE NOTE 14
- EXISTING ELECTRICAL OR TELEPHONE DUCT BANK
- EXISTING FIRE HYDRANT
- EXISTING PIV
- EXISTING GATE VALVE
- EXISTING POWER OR LIGHT POLE
- EXISTING ROADWAYS
- EXISTING BUILDINGS
- EXISTING SIDEWALKS
- MAH-XX-XX-XXX — EXISTING MANHOLE NUMBER
- SPECIAL PURPOSE RECEPTACLE
- DISCONNECT SWITCH
- TRANSFORMER

## MATERIALS

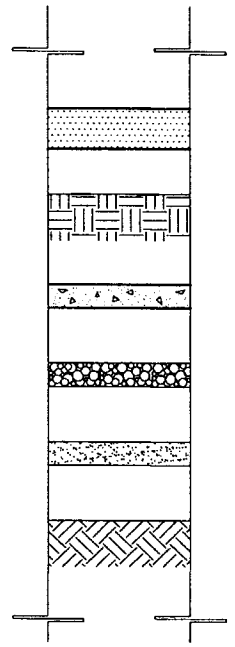

- ASPHALT PAVEMENT
- COMPACTED FILL
- CONCRETE
- GRANULAR FILL
- SAND
- UNDISTURBED EARTH

## GENERAL NOTES

1. EXISTING UTILITY LINES REFERENCED IN THIS PACKAGE ARE BASED ON CURRENT "AS BUILT" UNDERGROUND UTILITIES AS SHOWN ON DRAWING.
2. RETAIN AND PROTECT ALL EXISTING FACILITIES UNLESS OTHERWISE NOTED.
3. SEE "SUMMARY OF WORK" SPECIFICATION FOR ANTICIPATED SEQUENCE OF OPERATIONS.
4. ALL UTILITIES EXPOSED DURING EXCAVATION NOT REMOVED ARE TO BE ADEQUATELY SUPPORTED BY THE SUBCONTRACTOR TO PREVENT DAMAGE DURING ALL PHASES OF CONSTRUCTION, INCLUDING BACKFILL.
5. LOCATION AND ELEVATION SHOWN FOR EXISTING UTILITIES ARE APPROXIMATE. SUBCONTRACTOR SHALL HAND EXCAVATE TO FIELD LOCATE INTERFERENCES AND PREVENT ANY DAMAGE DURING EXCAVATION.
6. FOR ESTIMATING PURPOSES, REMOVAL AND SAW CUTTING OF ALL ASPHALT CONCRETE SURFACES ARE ASSUMED TO BE AN AVERAGE OF 4" THICK.
7. PRIOR TO BACKFILLING, ALL EXPOSED UNDERGROUND UTILITIES ARE TO BE LOCATED BY HORIZONTAL COORDINATES AND VERTICAL ELEVATION BASED ON INTEC SITE SPECIFIC HORIZONTAL AND VERTICAL DATUM.
8. SUBCONTRACTOR SHALL REINSTALL ALL SIGNS REMOVED DURING CONSTRUCTION AT OR NEAR THE ORIGINAL POSITION AFTER CONSTRUCTION IS COMPLETE.
9. TEMPORARY TRAFFIC CONTROL SIGNS, BARRICADES, FLAGGING ETC. MAY BE REQUIRED TO PROPERLY CONTROL TRAFFIC DURING CONSTRUCTION. ALL SIGNING AND TRAFFIC CONTROL OPERATIONS SHALL COMPLY WITH THE CURRENT "MANUAL ON UNIFORM TRAFFIC CONTROL DEVICES".
10. ALL EXCAVATED MATERIAL SHALL BE MANAGED PER THE SPECIAL CONDITIONS.
11. HORIZONTAL AND VERTICAL COORDINATES ARE INTEC SITE SPECIFIC. SURVEY CONTROL POINT INFORMATION WILL BE FURNISHED UPON REQUEST.
12. EXISTING UTILITIES ARE SHOWN AND IDENTIFIED FOR INFORMATION ONLY. SPECIFIC LINE TYPE IDENTIFICATION WILL BE FURNISHED UPON REQUEST.

## ABBREVIATIONS

| | | |
|---|---|---|
| BGS | - BELOW GROUND SURFACE | |
| BLDG | - BUILDING | |
| BOP | - BOTTOM OF PIPE | |
| ℄ | - CENTERLINE | |
| C | - CONDUIT | |
| CLR | - CLEAR (COVER OVER REBAR) | |
| CS | - CARBON STEEL | |
| CONC | - CONCRETE | |
| CONT | - CONTINUOUS | |
| CO | - CLEAN OUT | |
| COMM | - COMMUNICATIONS DUCT BANK | |
| CT | - CONDENSATE | |
| CTR | - CENTER | |
| CY | - CUBIC YARD | |
| DB | - DUCT BANK | |
| DIA ø | - DIAMETER | |
| DIP | - DUCTILE IRON PIPE | |
| DWG | - DRAWING | |
| EA | - EACH | |
| EF | - EACH FACE | |
| EL | - ELEVATION | |
| EQ SP | - EQUALLY SPACED | |
| EW | - EACH WAY | |
| EXIST. | - EXISTING | |
| FH | - FIRE HYDRANT | |
| FIN. GRD | - FINISHED GRADE | |
| FO | - FIBER OPTIC CABLE | |
| FT | - FOOT/FEET | |
| FW | - FIRE WATER | |
| HA | - HIGH PRESSURE AIR | |
| HH | - HANDHOLE | |
| HS | - HIGH PRESSURE STEAM | |
| HYD | - HYDRANT | |
| HORIZ | - HORIZONTAL | |
| ID | - INSIDE DIAMETER | |
| LC | - LOAD CENTER | |
| LF | - LINEAR FOOT | |
| LG | - LENGTH OR LONG | |
| MAH | - MANHOLE | |
| MATL | - MATERIAL | |
| MAX | - MAXIMUM | |
| MFR | - MANUFACTURER | |
| MIN | - MINIMUM | |
| NA | - NITRIC ACID | |
| NO. | - NUMBER | |
| OC | - ON CENTER | |
| OD | - OUTSIDE DIAMETER | |
| PC | - POINT OF CURVE | |
| PIV | - POST INDICATOR VALVE | |
| PL | - PROCESS WASTE, LOW LEVEL | |
| PLCS | - PLACES | |
| PT | - POINT OF TANGENT | |
| PVC | - POLYVINYLCHLORIDE | |
| R | - RADIUS | |
| RC | - REINFORCED CONCRETE | |
| REF | - REFERENCE | |
| REQD | - REQUIRED | |
| REV | - REVISION | |
| RGS | - RIGID GALVANIZED STEEL | |
| RP | - REFERENCE POINT | |
| SEC | - SECTION | |
| SH | - SHEET | |
| SPEC | - SPECIFICATON | |
| STA | - STATION | |
| STD | - STANDARD | |
| SW | - SERVICE WASTE | |
| THK | - THICK | |
| TOC | - TOP OF CONCRETE | |
| TOS | - TOP OF STEEL | |
| TYP | - TYPICAL | |
| UN | - UNLESS NOTED OTHERWISE | |
| VERT | - VERTICAL | |
| WQ | - SANITARY SEWER | |
| X-REF | - EXTERNAL REFERENCE DRAWING | |

| | | |
|---|---|---|
| FOR DRAWING INDEX SEE DRAWING NO. 624435 | SUBCONTRACT NO. | INEEL (Idaho National Engineering & Environmental Laboratory) BECHTEL BWXT IDAHO, LLC |
| NO SCALE | REQUESTER: K ROGERS<br>DESIGN: KURT FRITZ<br>DRAWN: J MONCUR<br>PROJECT NO. 23052<br>SPEC CODE | INEEL<br>OU 3-13 GROUP 7<br>VES-SFE-20 HOT WASTE TANK REMEDIAL DESIGN<br>PHASE II<br>LEGEND, ABBREVIATIONS AND GENERAL NOTES |
| DESIGN PHASE: AFC<br>QUALITY LEVEL: CG | FOR REVIEW/APPROVAL SIGNATURES SEE DAR NO. 102658<br>EFFECTIVE DATE: 6-26-03 | SIZE D; CAGE CODE; INDEX CODE NUMBER: AREA 200, TYPE 9999, CL 01, ORIG 090; DWG-624436; REV<br>SCALE: NONE; SHEET T-2 |

File: 624436.dwg
Path: X:\VES-SFE-20 Hot Waste Tank\Drawings\Ph II
ID: MXJ
Drawn in Model Space

FMT-D1-REV 3.3

| REVISIONS | | |
|---|---|---|
| REV | DESCRIPTION | EFFECTIVE DATE: |

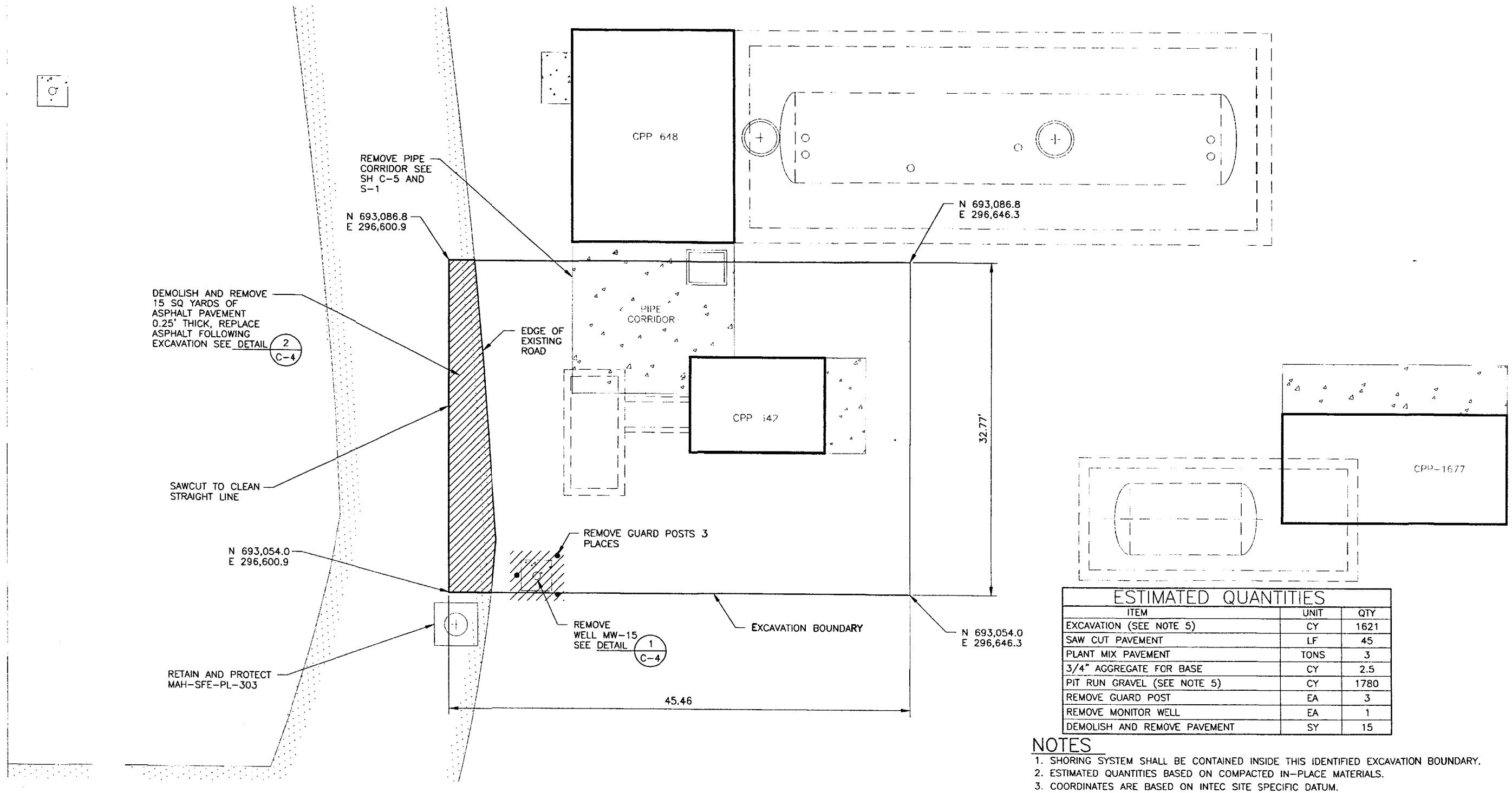


## ESTIMATED QUANTITIES

| ITEM | UNIT | QTY |
|---|---|---|
| EXCAVATION (SEE NOTE 5) | CY | 1621 |
| SAW CUT PAVEMENT | LF | 45 |
| PLANT MIX PAVEMENT | TONS | 3 |
| 3/4" AGGREGATE FOR BASE | CY | 2.5 |
| PIT RUN GRAVEL (SEE NOTE 5) | CY | 1780 |
| REMOVE GUARD POST | EA | 3 |
| REMOVE MONITOR WELL | EA | 1 |
| DEMOLISH AND REMOVE PAVEMENT | SY | 15 |

## NOTES

1. SHORING SYSTEM SHALL BE CONTAINED INSIDE THIS IDENTIFIED EXCAVATION BOUNDARY.
2. ESTIMATED QUANTITIES BASED ON COMPACTED IN-PLACE MATERIALS.
3. COORDINATES ARE BASED ON INTEC SITE SPECIFIC DATUM.
4. ESTIMATED QUANTITIES SHOWN ARE FOR THIS SHEET ONLY.
5. EXCAVATION AND BACKFILL WILL VARY BASED ON CONTAMINATED SOIL ENCOUNTERED. QUANTITIES BASED ON EXCAVATING A BASALT DEPTH OF 32 FT BGS.
6. PIPING NOT SHOWN FOR CLARITY, FOR PIPING REMOVAL SEE SHEET P-1.

PROFESSIONAL ENGINEER REGISTERED 9404 6/24/03 STATE OF IDAHO KURT D. FRITZ

| | |
|---|---|
| FOR DRAWING INDEX SEE DRAWING NO. 624435 | SUBCONTRACT NO. |
| SCALE: 1" = 5.0' | REQUESTER: K ROGERS |
| | DESIGN: K FRITZ |
| | DRAWN: J MONCUR |
| | PROJECT NO. 23052 |
| | SPEC CODE |
| DESIGN PHASE: AFC | FOR REVIEW/APPROVAL SIGNATURES SEE DAR NO. 102658 |
| SAFETY CATEGORY: CG | EFFECTIVE DATE: 6-26-03 |

INEEL BECHTEL BWXT IDAHO, LLC

INEEL
OU 3-13 GROUP 7
VES-SFE-20 HOT WASTE TANK REMEDIAL DESIGN
PHASE II
EXCAVATION PLAN AND ESTIMATED QUANTITIES

| SIZE | CAGE CODE | INDEX CODE NUMBER | | | | | DWG- | REV |
|---|---|---|---|---|---|---|---|---|
| | | AREA | TYPE | CL | ORIG | | | |
| D | 01MF3 | 200 | 0100 | 02 | 090 | | 624437 | |

SCALE: 1"=5.0' SHEET C-1

File: 624437.dwg
Path: X:\VES-SFE-20 Hot Waste Tank Remedial Design\23052\Ph II\DWG\PH II
Layout Name: Layout1 ID: MKJ

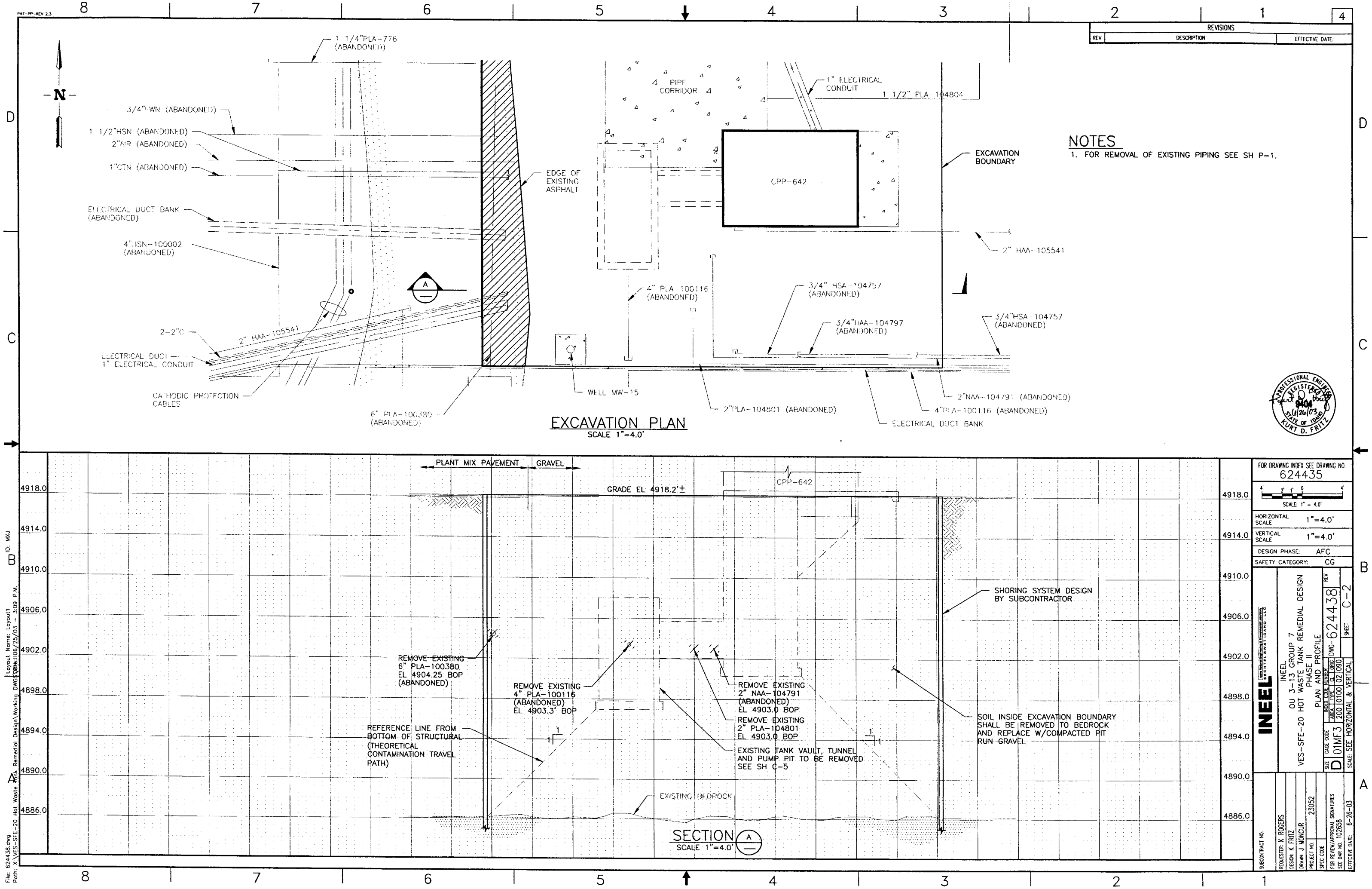


## NOTES

1. FOR REMOVAL OF EXISTING PIPING SEE SH P-1.

REVISIONS

| REV | DESCRIPTION | EFFECTIVE DATE: |
|---|---|---|

PROFESSIONAL ENGINEER REGISTERED 9404 6/26/03 STATE OF IDAHO KURT D. FRITZ

FOR DRAWING INDEX SEE DRAWING NO. 624435

SCALE: 1" = 4.0'

| | |
|---|---|
| HORIZONTAL SCALE | 1"=4.0' |
| VERTICAL SCALE | 1"=4.0' |
| DESIGN PHASE: | AFC |
| SAFETY CATEGORY: | CG |

INEEL

INEEL
OU 3-13 GROUP 7
VES-SFE-20 HOT WASTE TANK REMEDIAL DESIGN
PHASE II
PLAN AND PROFILE

| SIZE | CAGE CODE | INDEX CODE NUMBER AREA | TYPE | QL | ORIG | DWG- 624438 | REV |
|---|---|---|---|---|---|---|---|
| D | 01MF3 | 200 | 0100 | 02 | 090 | SHEET C-2 | |

SCALE: SEE HORIZONTAL & VERTICAL

SUBCONTRACT NO.
REQUESTER: K ROGERS
DESIGN: K FRITZ
DRAWN: J MONCUR
PROJECT NO. 23052
SPEC CODE
FOR REVIEW/APPROVAL SIGNATURES SEE DAR NO. 102658
EFFECTIVE DATE: 6-26-03

File: 624438.dwg
Path: X:\VES-SFE-20 Hot Waste Tank Remedial Design\Working DWGS\Layout Name: Layout1
Date: 06/25/03 - 3:09 P.M.
ID: MXJ

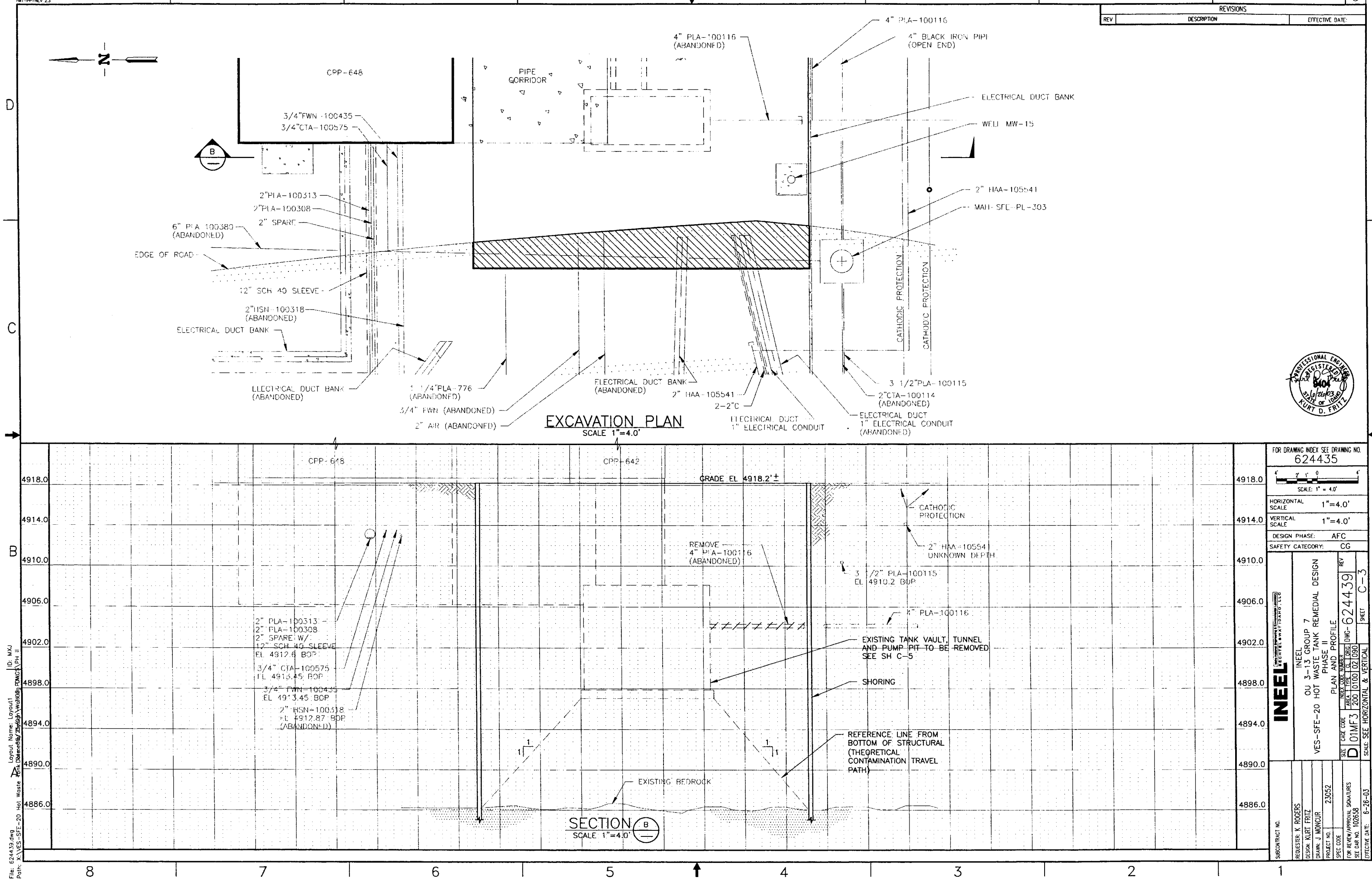

REVISIONS
REV
DESCRIPTION
EFFECTIVE DATE:
CPP-648
PIPE CORRIDOR
4" PLA-100116 (ABANDONED)
4" PLA-100116
4" BLACK IRON PIPE (OPEN END)
ELECTRICAL DUCT BANK
WELL MW-15
3/4"FWN-100435
3/4"CTA-100575
2"PLA-100313
2"PLA-100308
2" SPARE
6" PLA 100380 (ABANDONED)
EDGE OF ROAD
12" SCH 40 SLEEVE
2"HSN-100318 (ABANDONED)
ELECTRICAL DUCT BANK
2" HAA-105541
MAH-SFE-PL-303
CATHODIC PROTECTION
CATHODIC PROTECTION
ELECTRICAL DUCT BANK (ABANDONED)
1 1/4"PLA-776 (ABANDONED)
3/4" FWN (ABANDONED)
2" AIR (ABANDONED)
ELECTRICAL DUCT BANK (ABANDONED)
2" HAA-105541
2-2"C
ELECTRICAL DUCT 1" ELECTRICAL CONDUIT
3 1/2"PLA-100115
2"CTA-100114 (ABANDONED)
ELECTRICAL DUCT 1" ELECTRICAL CONDUIT (ABANDONED)
EXCAVATION PLAN
SCALE 1"=4.0'
CPP-648
CPP-642
GRADE EL 4918.2'±
CATHODIC PROTECTION
2" HAA-105541 UNKNOWN DEPTH
REMOVE 4" PLA-100116 (ABANDONED)
3 1/2" PLA-100115 EL 4910.2 BOP
4" PLA-100116
2" PLA-100313
2" PLA-100308
2" SPARE W/ 12" SCH 40 SLEEVE EL 4912.6 BOP
3/4" CTA-100575 EL 4913.45 BOP
3/4" FWN-100435 EL 4913.45 BOP
2" HSN-100318 EL 4912.87 BOP (ABANDONED)
EXISTING TANK VAULT, TUNNEL AND PUMP PIT TO BE REMOVED SEE SH C-5
SHORING
REFERENCE LINE FROM BOTTOM OF STRUCTURAL (THEORETICAL CONTAMINATION TRAVEL PATH)
EXISTING BEDROCK
4918.0
4914.0
4910.0
4906.0
4902.0
4898.0
4894.0
4890.0
4886.0
SECTION B
SCALE 1"=4.0'
PROFESSIONAL ENGINEER REGISTERED 9404 STATE OF IDAHO KURT D. FRITZ
FOR DRAWING INDEX SEE DRAWING NO. 624435
SCALE: 1" = 4.0'
HORIZONTAL SCALE 1"=4.0'
VERTICAL SCALE 1"=4.0'
DESIGN PHASE: AFC
SAFETY CATEGORY: CG
INEEL
INEEL OU 3-13 GROUP 7
VES-SFE-20 HOT WASTE TANK REMEDIAL DESIGN
PHASE II
PLAN AND PROFILE
DWG-624439
REV
SHEET C-3
SIZE D
CAGE CODE 01MF3
SCALE: SEE HORIZONTAL & VERTICAL
SUBCONTRACT NO.
REQUESTER: K ROGERS
DESIGN: KURT FRITZ
DRAWN: J MONCUR
PROJECT NO. 23052
SPEC CODE
FOR REVIEW/APPROVAL SIGNATURES SEE DAR NO. 102658
EFFECTIVE DATE: 6-26-03

| REVISIONS | | |
|---|---|---|
| REV | DESCRIPTION | EFFECTIVE DATE: |

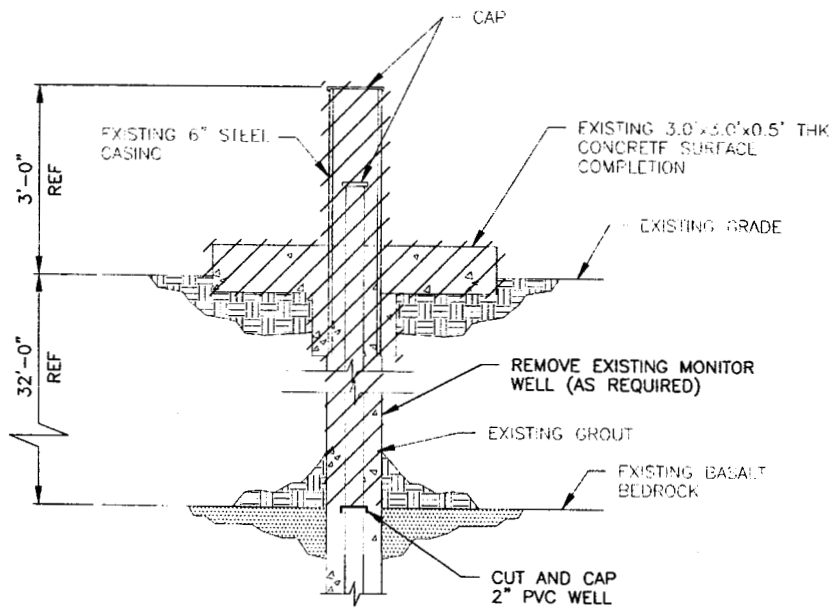


EXISTING WELL MW-15

DETAIL 1/C-1
SCALE: 1"=1'-0"

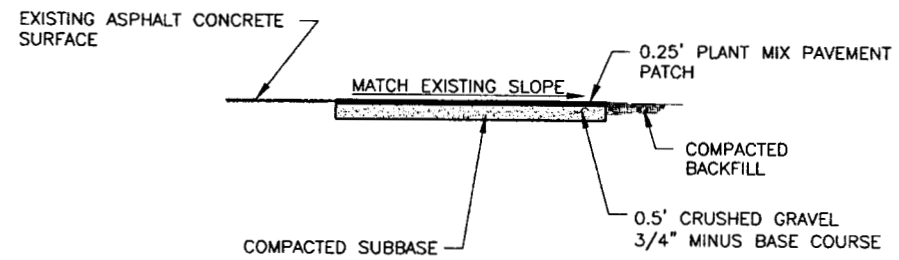


SECTION C/—
NTS

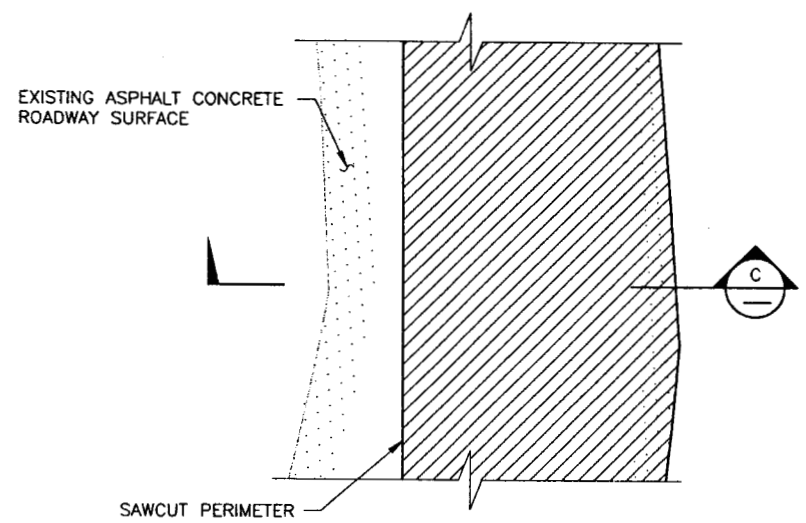


TYPICAL PAVEMENT DEMOLITION AND REPAIR

DETAIL 2/C-1
NTS

PROFESSIONAL ENGINEER REGISTERED 9404 4/24/03 STATE OF IDAHO KURT D. FRITZ

| | | |
|---|---|---|
| FOR DRAWING INDEX SEE DRAWING NO. 624435 | SUBCONTRACT NO. | INEEL BECHTEL BWXT IDAHO, LLC |
| 1' 0 1' SCALE: 1" = 1'-0" | REQUESTER: K ROGERS<br>DESIGN: K FRITZ<br>DRAWN: J MONCUR | INEEL<br>OU 3-13 GROUP 7<br>VES-SFE-20 HOT WASTE TANK REMEDIAL DESIGN<br>PHASE II<br>DETAILS AND SECTION |
| | PROJECT NO. 23052<br>SPEC CODE | SIZE D · CAGE CODE 01MF3 · INDEX CODE NUMBER AREA 200 TYPE 0100 CL 02 ORIG 090 · DWG-624440 · REV |
| DESIGN PHASE: AFC | FOR REVIEW/APPROVAL SIGNATURES SEE DAR NO. 102658 | |
| SAFETY CATEGORY: CG | EFFECTIVE DATE: 6-26-03 | SCALE: NOTED · SHEET C-4 |

File: 624440.dwg
Path: X:\VES-SFE-20 Hot Waste Tank Remedial Design\Phase II\Dwgs\PDMS\PH II
Layout Name: D Size | ID: MXJ

| REVISIONS | | |
|---|---|---|
| REV | DESCRIPTION | EFFECTIVE DATE: |

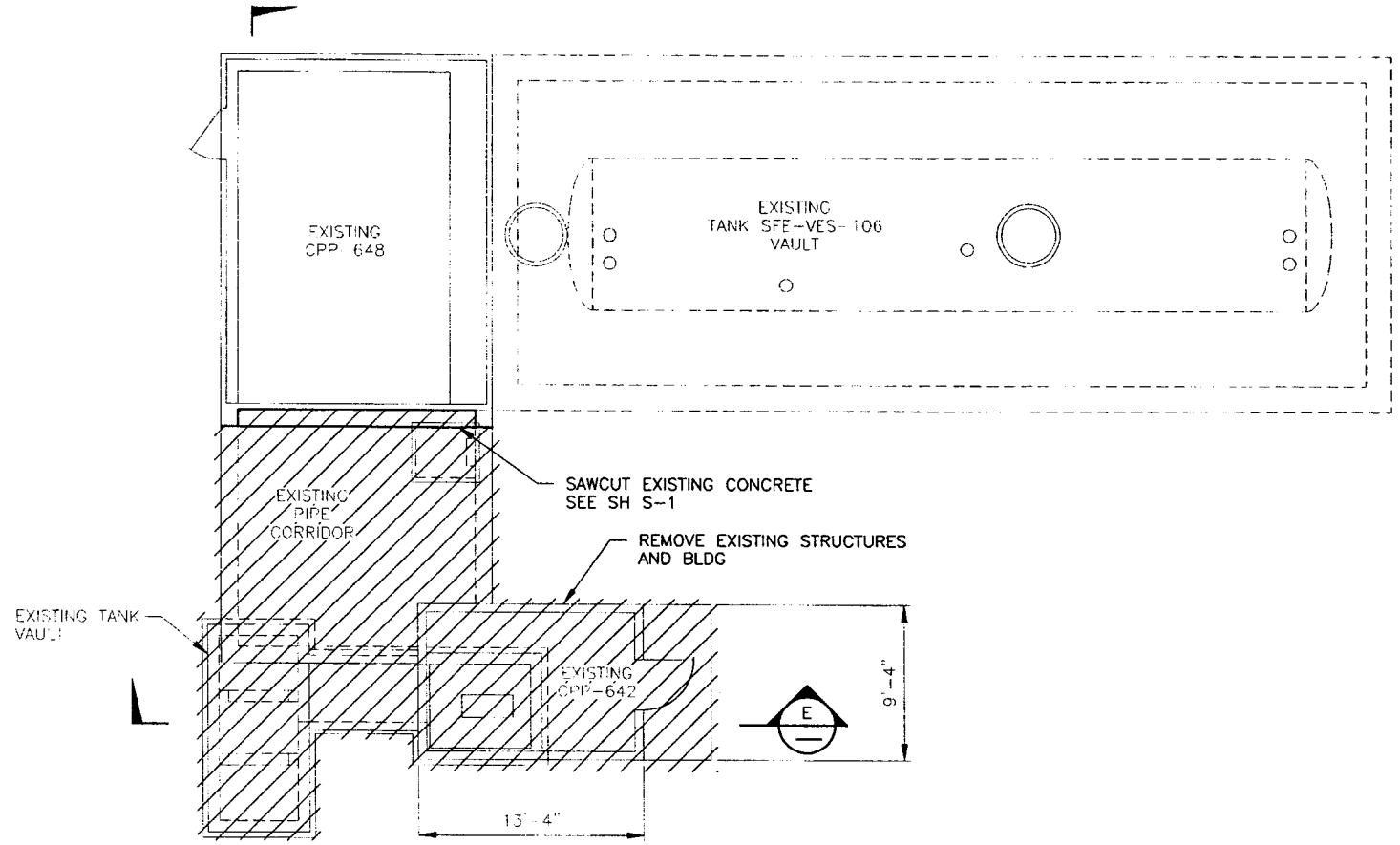


## DEMOLITION PLAN
SCALE: 3/16"=1'-0"

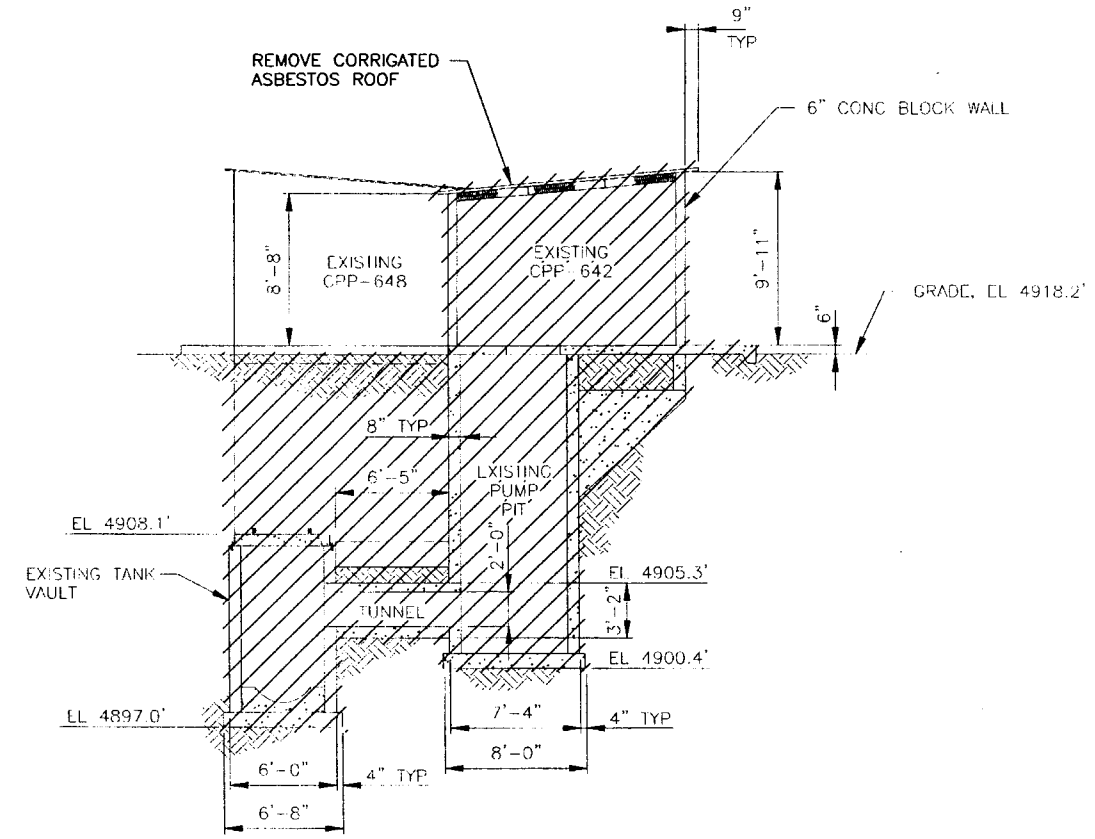


## SECTION E
SCALE: 3/16"=1'-0"

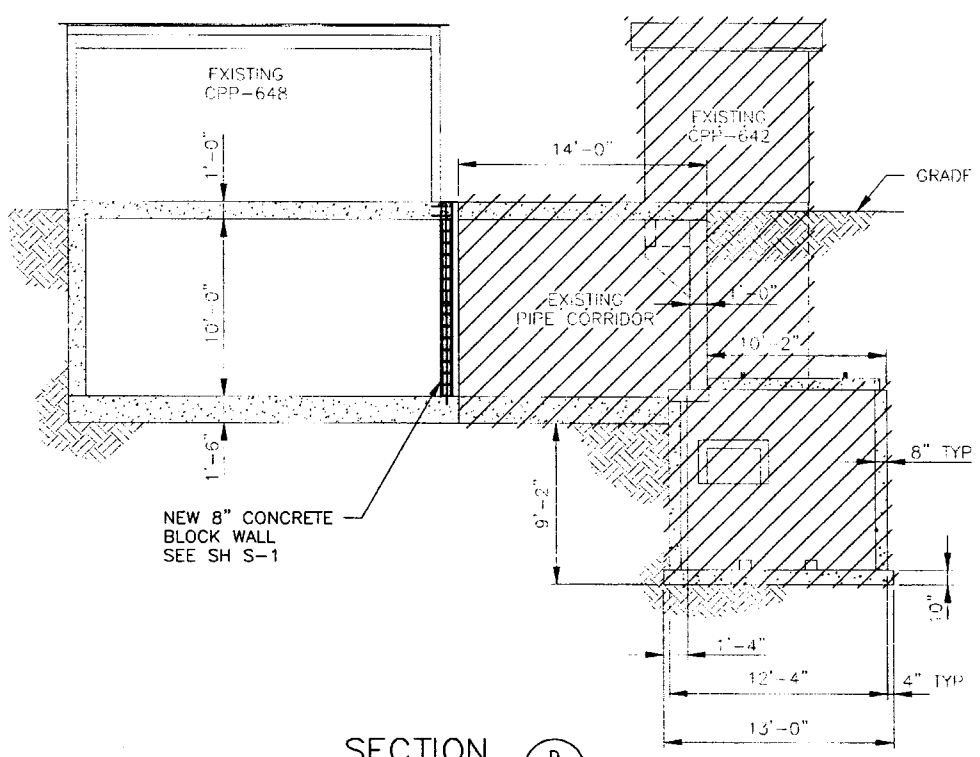


## SECTION D
SCALE: 3/16"=1'-0"

## NOTES
1. ALL DIMENSIONS ARE REFERENCE ONLY. FIELD VERIFY DIMENSIONS.
2. PIPING NOT SHOWN FOR CLARITY SEE SH P-1.

PROFESSIONAL ENGINEER REGISTERED 8404 6/26/03 STATE OF IDAHO KURT D. FRITZ

| | | |
|---|---|---|
| FOR DRAWING INDEX SEE DRAWING NO. 624435 | SUBCONTRACT NO. | INEEL (Idaho National Engineering & Environmental Laboratory) LOCKHEED MARTIN IDAHO, LLC |
| 1' 0 1' 2' 3' 4' 5' 10' SCALE: 3/16" = 1'-0" | REQUESTER: K ROGERS | INEEL OU 3-13 GROUP 7 VES-SFE-20 HOT WASTE TANK REMEDIAL DESIGN PHASE II PLAN AND SECTIONS – DEMOLTION |
| | DESIGN: KURT FRITZ | |
| | DRAWN: J MONCUR | |
| | PROJECT NO. 23052 | |
| | SPEC CODE | |
| | FOR REVIEW/APPROVAL SIGNATURES SEE DAR NO. 102658 | SIZE D · CAGE CODE 01MF3 · INDEX CODE NUMBER: AREA 200, TYPE 0642, CL 02, ORIG 090 · DWG-624441 · REV |
| DESIGN PHASE: AFC | | |
| SAFETY CATEGORY: CG | EFFECTIVE DATE: 6-26-03 | SCALE: NOTED · SHEET C-5 |

File: 624441.dwg
Path: X:\VES-SFE-20 Hot Waste Tank Remedial Design\Working\DWGS\PH II
Layout Name: D Size
ID: MKJ

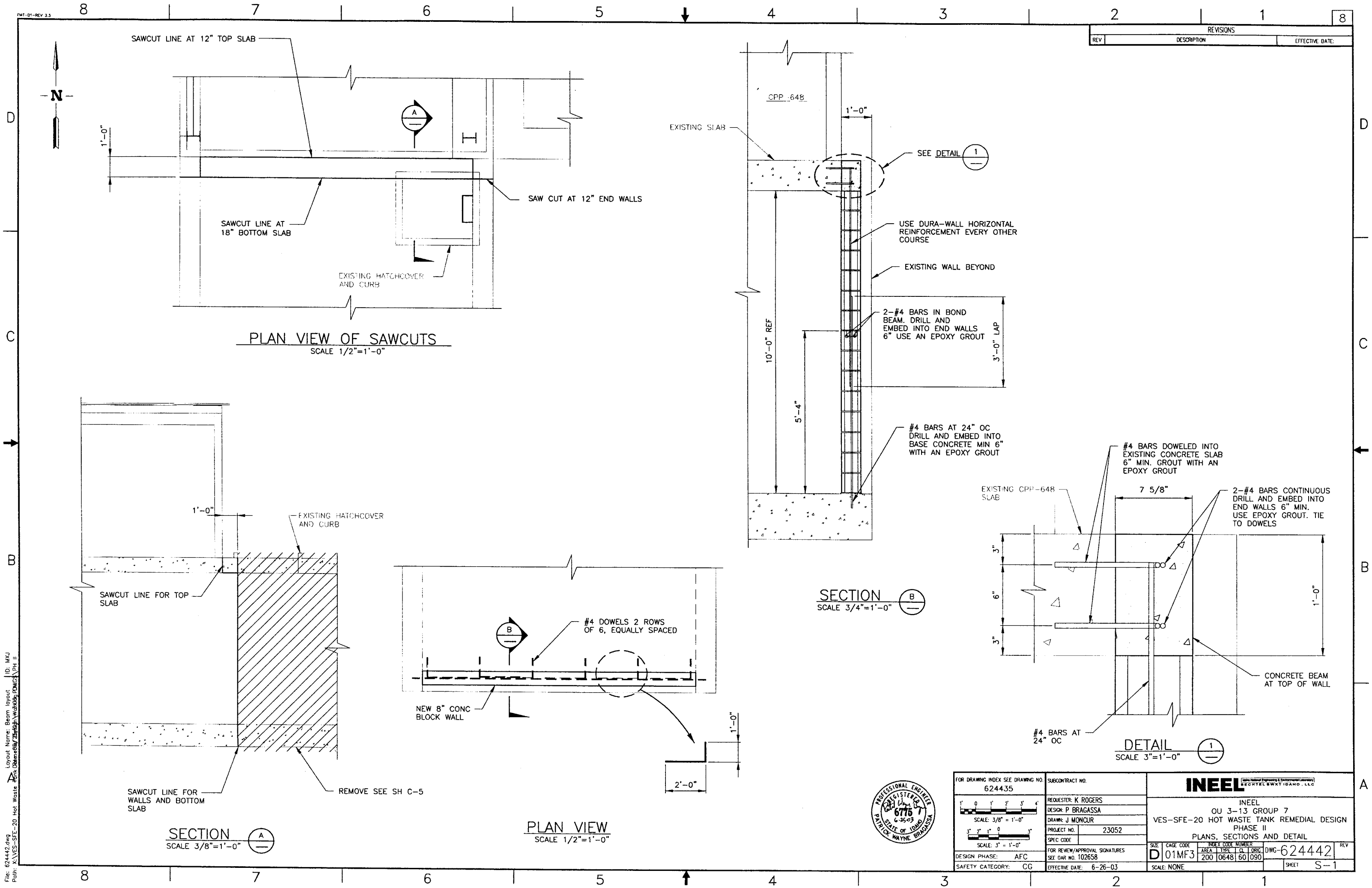

SAWCUT LINE AT 12" TOP SLAB
1'-0"
SAW CUT AT 12" END WALLS
SAWCUT LINE AT 18" BOTTOM SLAB
EXISTING HATCHCOVER AND CURB
PLAN VIEW OF SAWCUTS
SCALE 1/2"=1'-0"
CPP -648
1'-0"
EXISTING SLAB
SEE DETAIL 1
USE DURA-WALL HORIZONTAL REINFORCEMENT EVERY OTHER COURSE
EXISTING WALL BEYOND
2-#4 BARS IN BOND BEAM. DRILL AND EMBED INTO END WALLS 6" USE AN EPOXY GROUT
3'-0" LAP
10'-0" REF
5'-4"
#4 BARS AT 24" OC DRILL AND EMBED INTO BASE CONCRETE MIN 6" WITH AN EPOXY GROUT
SECTION B
SCALE 3/4"=1'-0"
#4 BARS DOWELED INTO EXISTING CONCRETE SLAB 6" MIN. GROUT WITH AN EPOXY GROUT
EXISTING CPP-648 SLAB
7 5/8"
2-#4 BARS CONTINUOUS DRILL AND EMBED INTO END WALLS 6" MIN. USE EPOXY GROUT. TIE TO DOWELS
3"
6"
3"
1'-0"
CONCRETE BEAM AT TOP OF WALL
#4 BARS AT 24" OC
DETAIL 1
SCALE 3"=1'-0"
1'-0"
EXISTING HATCHCOVER AND CURB
SAWCUT LINE FOR TOP SLAB
SAWCUT LINE FOR WALLS AND BOTTOM SLAB
REMOVE SEE SH C-5
SECTION A
SCALE 3/8"=1'-0"
#4 DOWELS 2 ROWS OF 6, EQUALLY SPACED
NEW 8" CONC BLOCK WALL
1'-0"
2'-0"
PLAN VIEW
SCALE 1/2"=1'-0"
PROFESSIONAL ENGINEER REGISTERED 6775 6-25-03 STATE OF IDAHO PATRICK WAYNE BRAGASSA
REVISIONS
REV DESCRIPTION EFFECTIVE DATE:
FOR DRAWING INDEX SEE DRAWING NO. 624435
SCALE: 3/8" = 1'-0"
SCALE: 3" = 1'-0"
DESIGN PHASE: AFC
SAFETY CATEGORY: CG
SUBCONTRACT NO.
REQUESTER: K ROGERS
DESIGN: P BRAGASSA
DRAWN: J MONCUR
PROJECT NO. 23052
SPEC CODE
FOR REVIEW/APPROVAL SIGNATURES SEE DAR NO. 102658
EFFECTIVE DATE: 6-26-03
INEEL
INEEL
OU 3-13 GROUP 7
VES-SFE-20 HOT WASTE TANK REMEDIAL DESIGN
PHASE II
PLANS, SECTIONS AND DETAIL
SIZE D
CAGE CODE 01MF3
INDEX CODE NUMBER AREA 200 TYPE 0648 CL 60 ORIG 090
DWG-624442
REV
SCALE: NONE
SHEET S-1

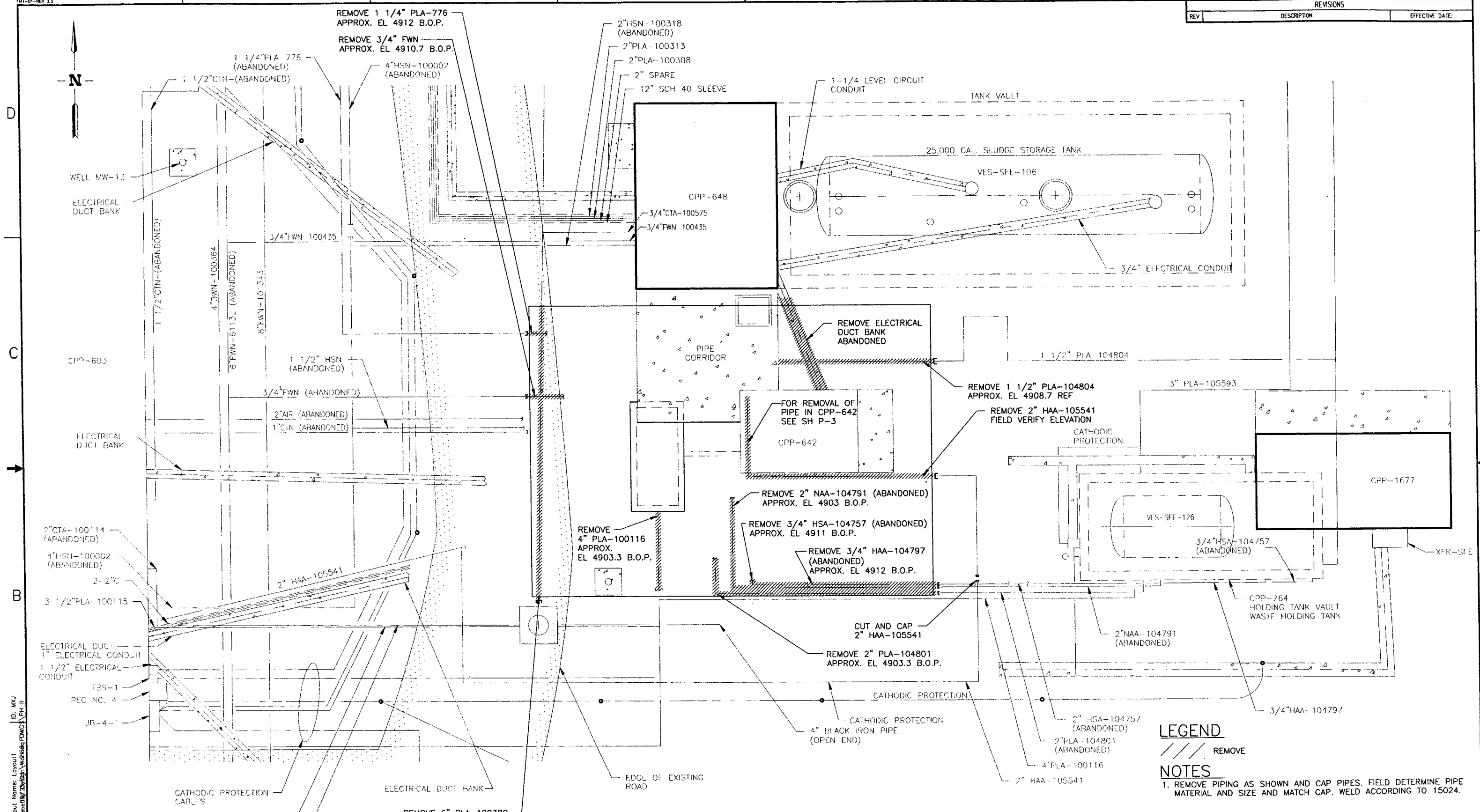


PIPING PLOT PLAN – DEMOLITION
SCALE 1"=5.0'

| | | | |
|---|---|---|---|
| FOR DRAWING INDEX SEE DRAWING NO. 624435 | SUBCONTRACT NO. | INEEL | |
| SCALE: 1" = 5.0' | REQUESTER: K ROGERS | INEEL OU 3-13 GROUP 7 VES-SFE-20 HOT WASTE TANK REMEDIAL DESIGN PHASE II PIPING PLOT PLAN – DEMOLITION | |
| | DESIGN: R VAN VOAST | | |
| | DRAWN: J MONCUR | | |
| | PROJECT NO. 23052 | | |
| | SPEC CODE | | |
| DESIGN PHASE: AFC | FOR REVIEW/APPROVAL SIGNATURES SEE DAR NO. 102658 | SIZE D | CAGE CODE 01MF3 |
| SAFETY CATEGORY: CG | EFFECTIVE DATE: 6-26-03 | DWG-624443 | REV |
| | | SCALE: NOTED | SHEET P-1 |

INDEX CODE NUMBER: AREA 200, TYPE 0200, CL 10, ORIG 090

PROFESSIONAL ENGINEER REGISTERED 7166 STATE OF IDAHO EDWARD C. ANDERSON

File: 624443.dwg Path: X:\VES-SFE-20 Hot Waste Tank Demolition\Working PDWGS\PH II Layout Name: Layout1 ID: MXJ

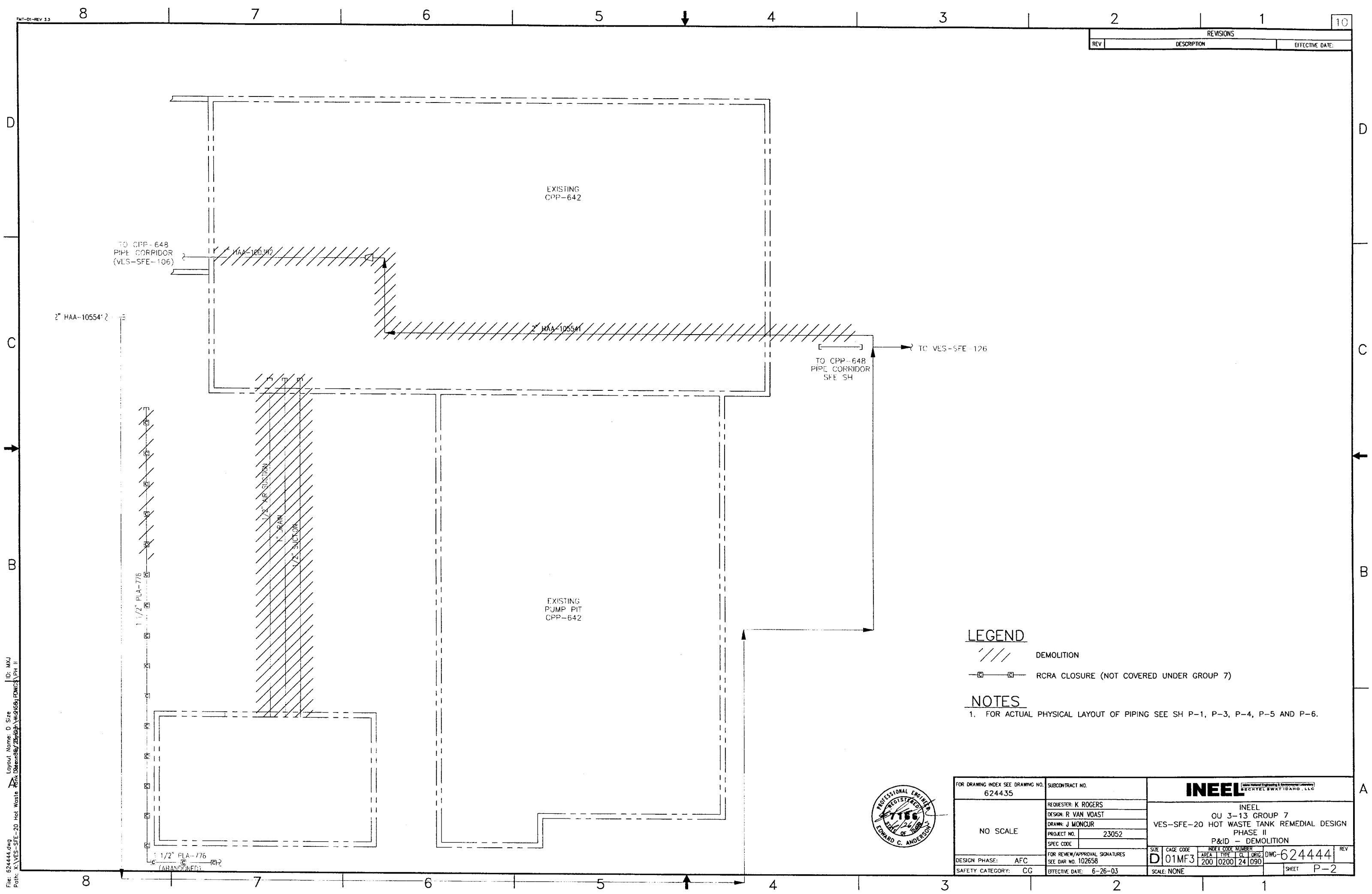


| REVISIONS | | |
|---|---|---|
| REV | DESCRIPTION | EFFECTIVE DATE: |

10

File: 624444.dwg
Path: X:\VES-SFE-20 Hot Waste Tank Remedial Design\Working Dwgs\PH II
Layout Name: D Size
ID: MXJ

FMT-01-REV 3.3

| REVISIONS | | |
|---|---|---|
| REV | DESCRIPTION | EFFECTIVE DATE: |

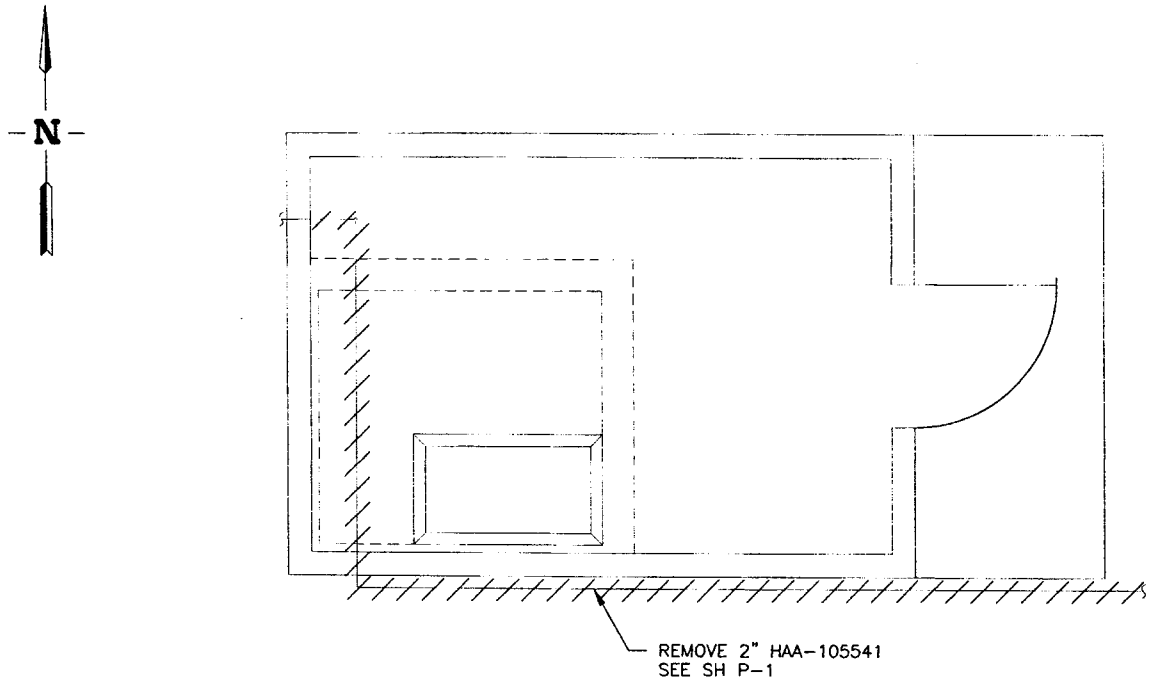


PUMP PIT AND TANK VAULT PLAN – DEMOLITION
SCALE: 1/2"=1'-0"

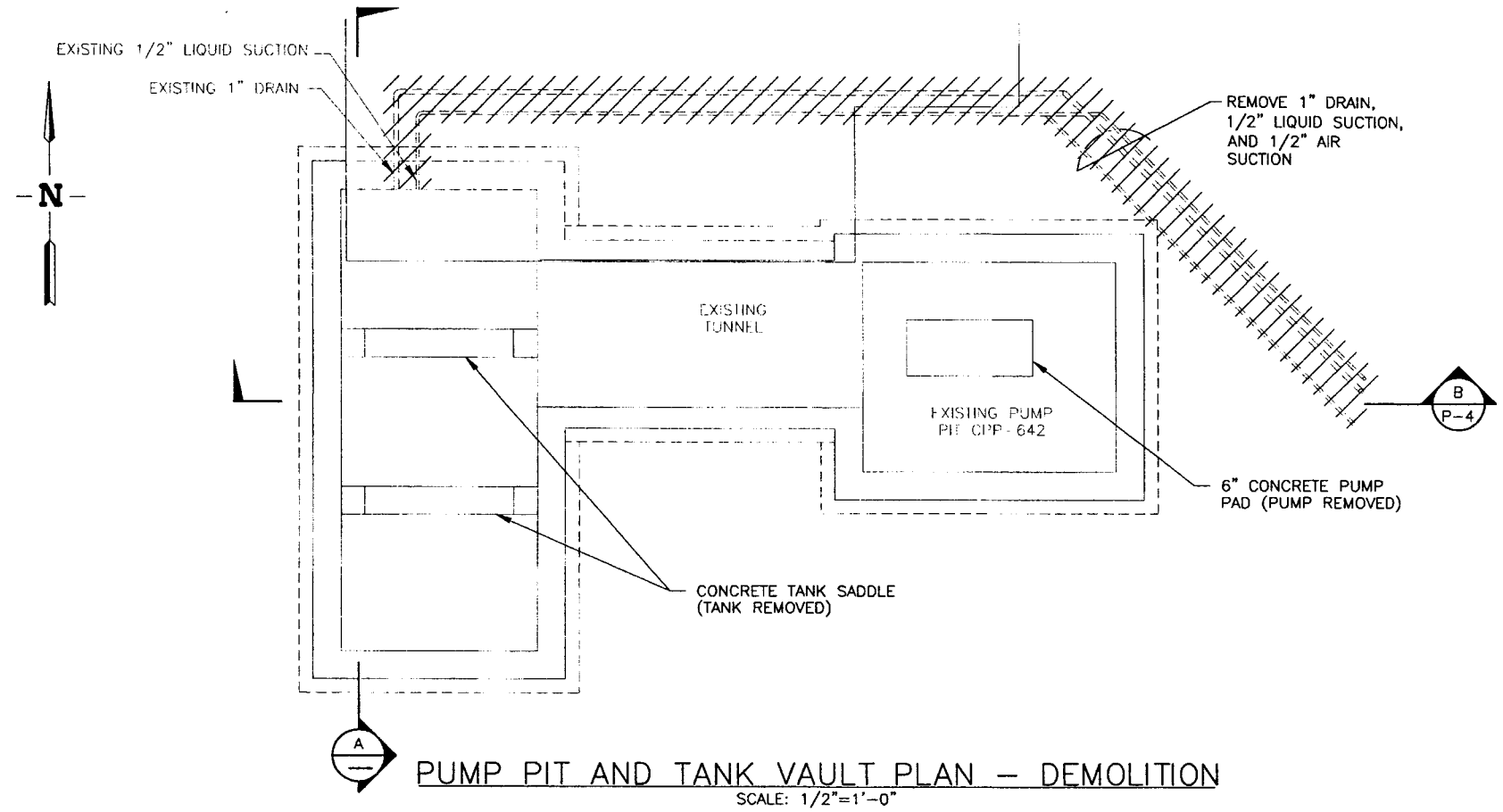


PUMP PIT AND TANK VAULT PLAN – DEMOLITION
SCALE: 1/2"=1'-0"

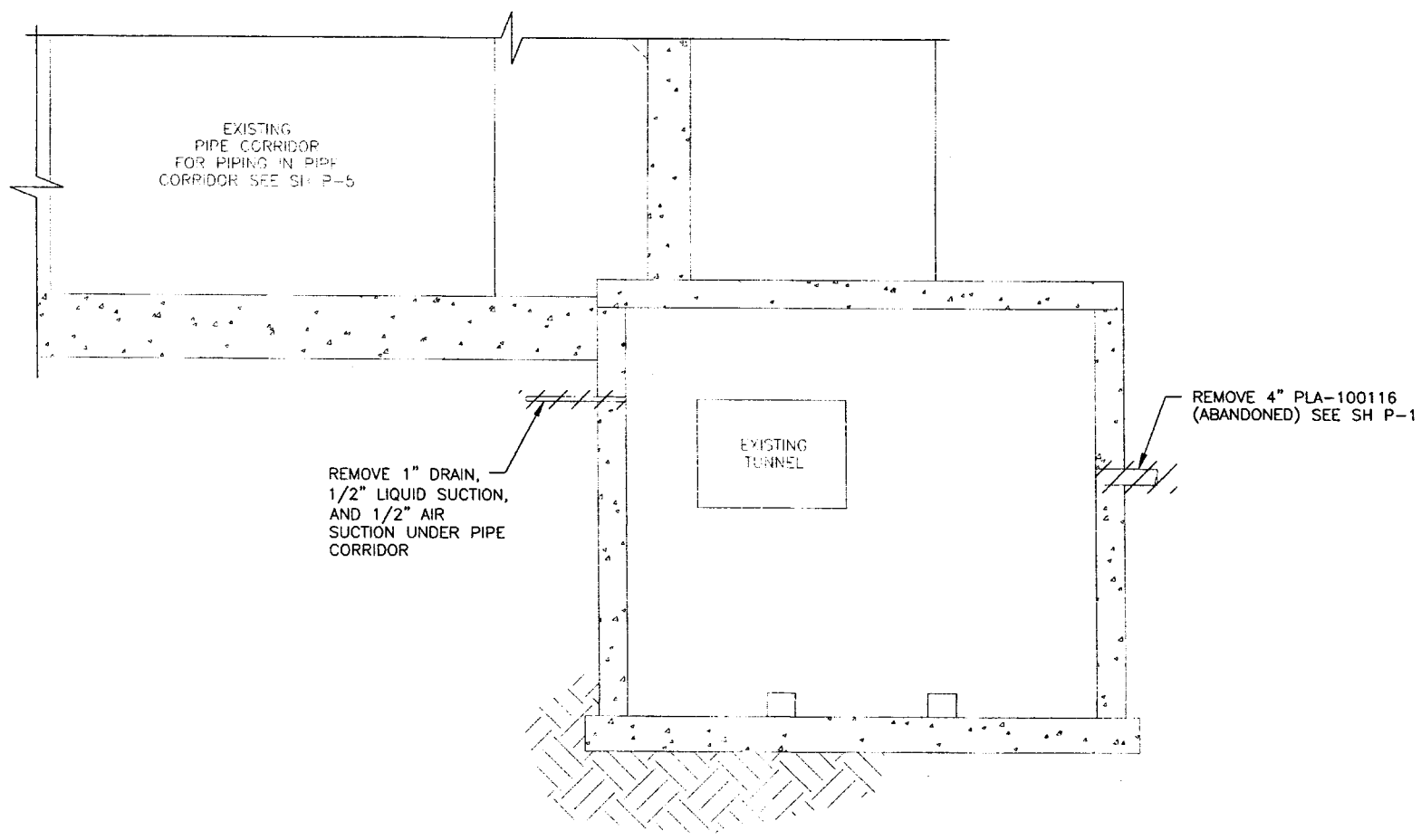


SECTION A
SCALE: 1/2"=1'-0"

LEGEND

REMOVE

PROFESSIONAL ENGINEER REGISTERED 7166 STATE OF IDAHO EDWARD C. ANDERSON

| | | |
|---|---|---|
| FOR DRAWING INDEX SEE DRAWING NO. 624435 | SUBCONTRACT NO. | INEEL (Idaho National Engineering & Environmental Laboratory) BECHTEL BWXT IDAHO, LLC |
| 1' 0 1' 2' 3' SCALE: 1/2" = 1'-0" | REQUESTER: K ROGERS<br>DESIGN: R VAN VOAST<br>DRAWN: J MONCUR | INEEL<br>OU 3-13 GROUP 7<br>VES-SFE-20 HOT WASTE TANK REMEDIAL DESIGN<br>PHASE II<br>PLANS AND SECTION – DEMOLITION |
| | PROJECT NO. 23052<br>SPEC CODE | SIZE D · CAGE CODE 01MF3 · INDEX CODE NUMBER AREA 200 TYPE 0642 G 50 ORIG 090 · DWG-624445 · REV |
| DESIGN PHASE: AFC | FOR REVIEW/APPROVAL SIGNATURES SEE DAR NO. 102658 | |
| SAFETY CATEGORY: CG | EFFECTIVE DATE: 6-26-03 | SCALE: NOTED · SHEET P-3 |

File: 624445.dwg
Path: X:\VES-SFE-20 Hot Waste Tank Design\PH II\Dwgs\PDMOS\PH II
Layout Name: D Size
ID: MKJ

| REVISIONS | | |
|---|---|---|
| REV | DESCRIPTION | EFFECTIVE DATE: |

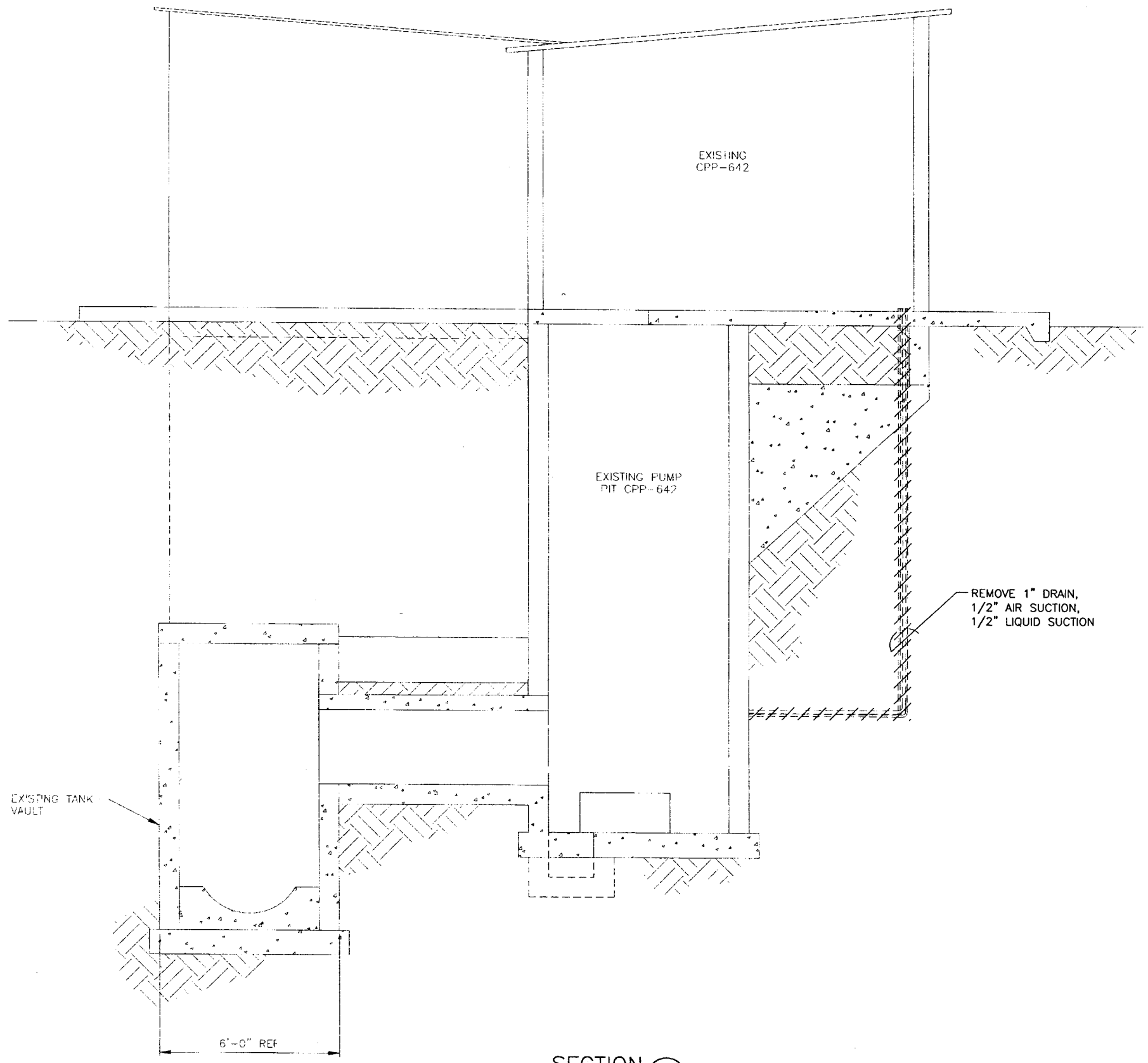


SECTION B/P-3
SCALE 1/2"=1'-0"

LEGEND
/// REMOVE

PROFESSIONAL ENGINEER REGISTERED 7166 STATE OF IDAHO EDWARD C. ANDERSON

| | | |
|---|---|---|
| FOR DRAWING INDEX SEE DRAWING NO. 624435 | SUBCONTRACT NO. | INEEL Idaho National Engineering & Environmental Laboratory BECHTEL BWXT IDAHO, LLC |
| SCALE: 1/2" = 1'-0" | REQUESTER: K ROGERS | INEEL<br>OU 3-13 GROUP 7<br>VES-SFE-20 HOT WASTE TANK REMEDIAL DESIGN<br>PHASE II<br>SECTION - DEMOLITION |
| | DESIGN: R VAN VOAST | |
| | DRAWN: J MONCUR | |
| | PROJECT NO. 23052 | |
| | SPEC CODE | |
| DESIGN PHASE: AFC | FOR REVIEW/APPROVAL SIGNATURES SEE DAR NO. 102658 | SIZE D · CAGE CODE 01MF3 · INDEX CODE NUMBER AREA 200 TYPE 0642 CL 50 ORIG 090 · DWG-624446 · REV |
| SAFETY CATEGORY: CG | EFFECTIVE DATE: 6-26-03 | SCALE: NOTED · SHEET P-4 |

File: 624446.dwg Path: X:\VES-SFE-20 Hot Waste Tank Remedial Design\Work64\PDWGS\PH II Layout Name: D Size ID: MXJ

| REVISIONS | | |
|---|---|---|
| REV | DESCRIPTION | EFFECTIVE DATE: |

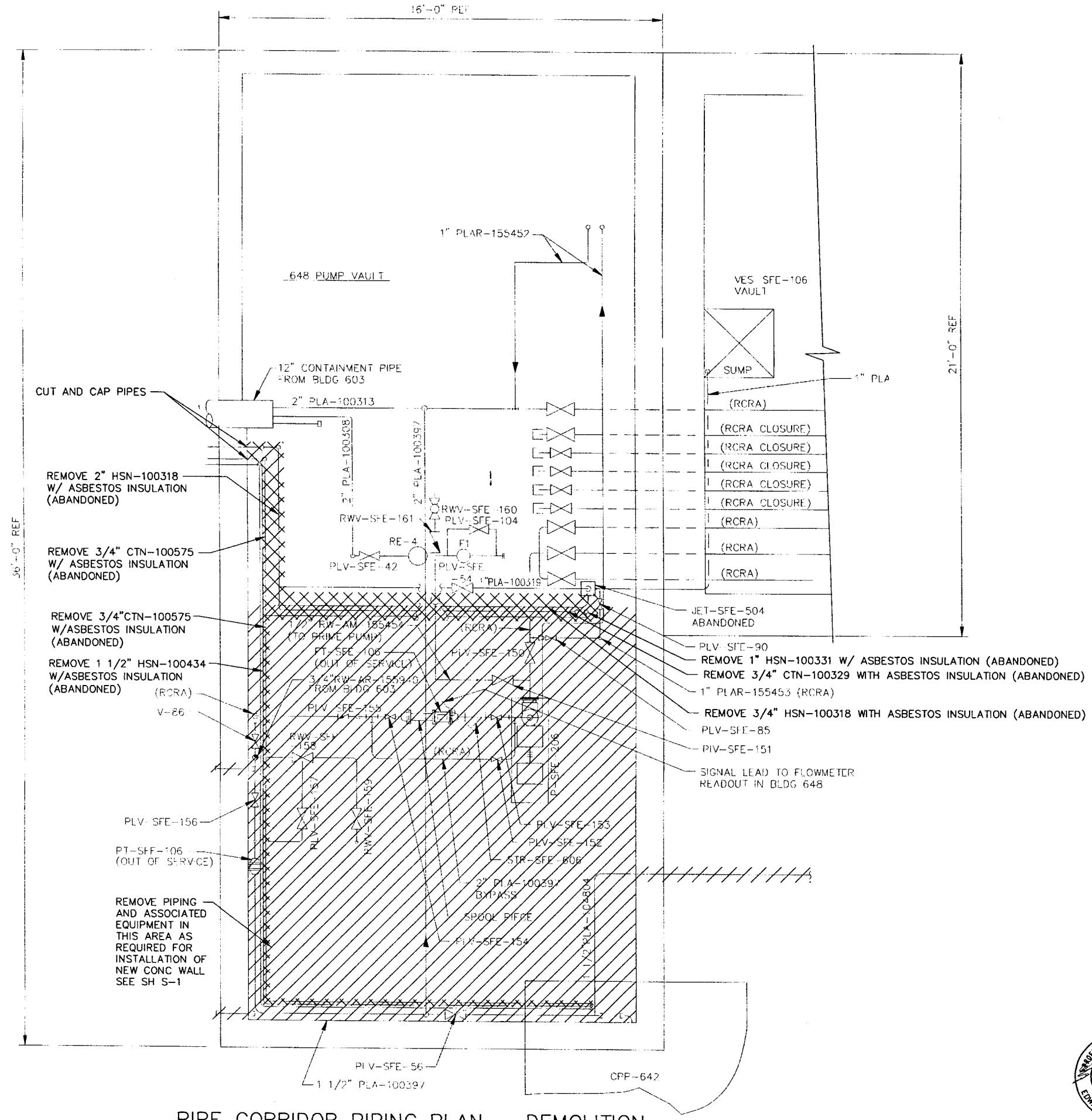


## PIPE CORRIDOR PIPING PLAN – DEMOLITION

## LEGEND

REMOVE

REMOVE PIPING W/ASBESTOS

## NOTES

1. ALL PIPING MAY NOT BE SHOWN. SUBCONTRACTOR IS REQUIRED TO REMOVE ALL PIPING IN HATCHED AREA OR AS REQUIRED FOR INSTALLATION OF NEW WALL. ASSUME APPROX 80 LF OF ASBESTOS INSULATION.
2. RETAIN AND PROTECT ALL PIPING UNLESS OTHERWISE NOTED.

PROFESSIONAL ENGINEER REGISTERED 7166 STATE OF IDAHO EDWARD C. ANDERSON

| | |
|---|---|
| FOR DRAWING INDEX SEE DRAWING NO. 624435 | SUBCONTRACT NO. |
| SCALE: 1/2" = 1'-0" | REQUESTER: K ROGERS |
| | DESIGN: R VAN VOAST |
| | DRAWN: J MONCUR |
| | PROJECT NO. 23052 |
| | SPEC CODE |
| DESIGN PHASE: AFC | FOR REVIEW/APPROVAL SIGNATURES SEE DAR NO. 102658 |
| SAFETY CATEGORY: CG | EFFECTIVE DATE: 6-26-03 |

INEEL — Idaho National Engineering & Environmental Laboratory — BECHTEL BWXT IDAHO, LLC

INEEL
OU 3-13 GROUP 7
VES-SFE-20 HOT WASTE TANK REMEDIAL DESIGN
PHASE II
PIPE CORRIDOR PIPING PLAN – DEMOLITION

| SIZE | CAGE CODE | INDEX CODE NUMBER AREA | TYPE | CL | ORIG | DWG- | REV |
|---|---|---|---|---|---|---|---|
| D | 01MF3 | 200 | 0648 | 50 | 090 | 624447 | |

SCALE: 1/2"=1'-0" SHEET P-5

| REVISIONS | | |
|---|---|---|
| REV | DESCRIPTION | EFFECTIVE DATE: |

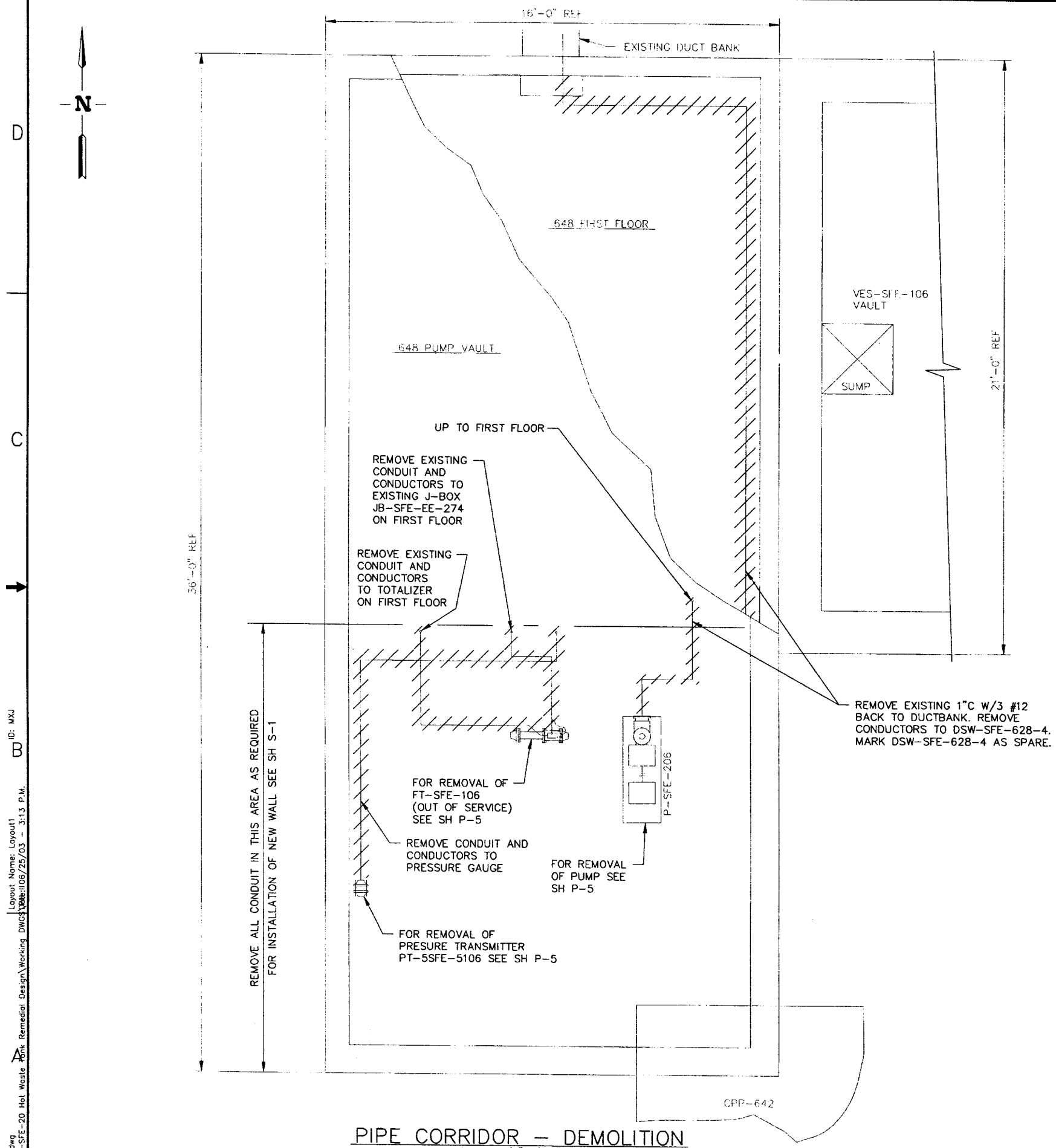


PIPE CORRIDOR – DEMOLITION
SCALE 1/2"=1'-0"

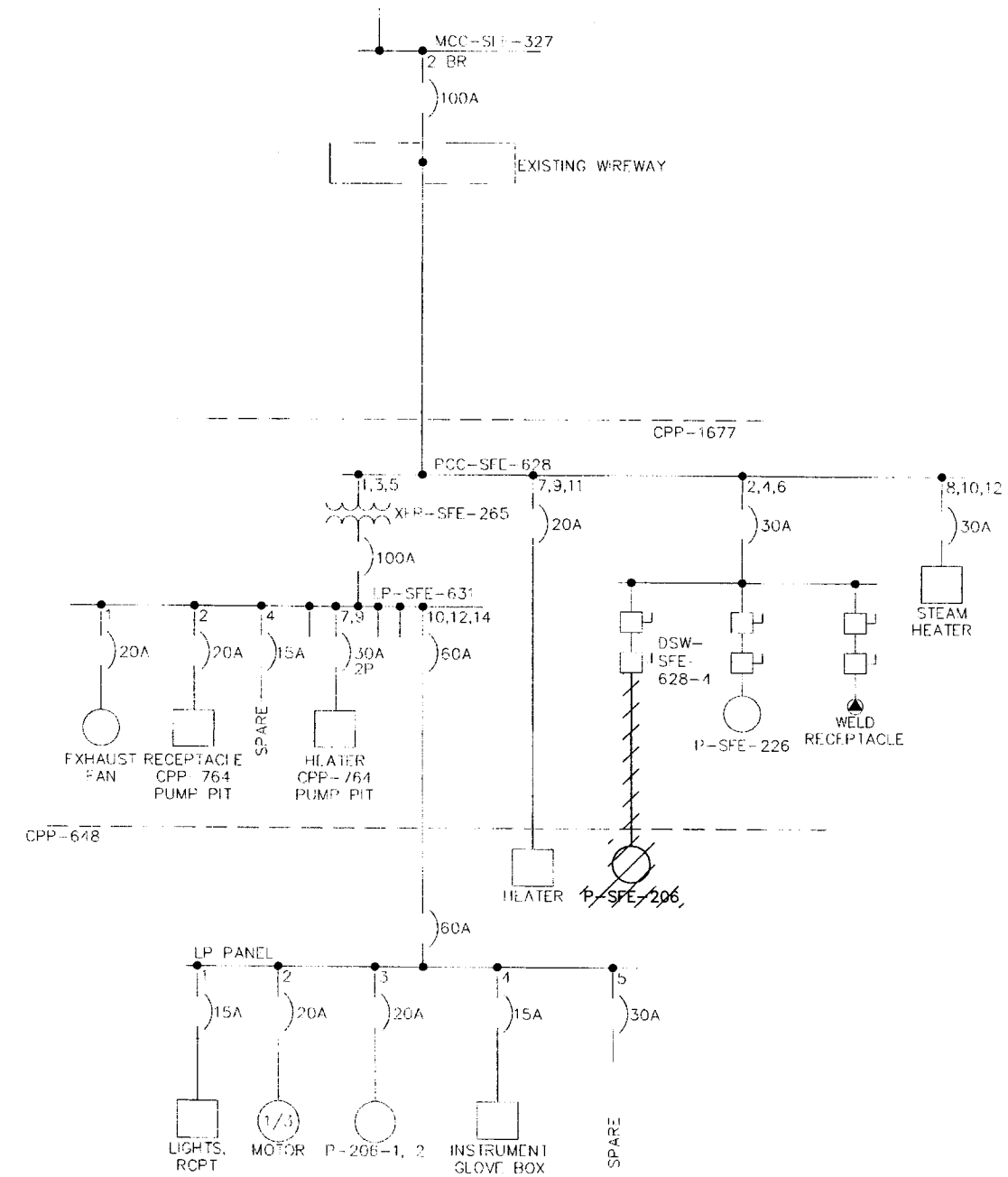


EXISTING PARTIAL ONE LINE DIAGRAM
NTS

PROFESSIONAL ENGINEER REGISTERED 9622 6/25/03 STATE OF IDAHO WILLIAM H. REED

| | | |
|---|---|---|
| FOR DRAWING INDEX SEE DRAWING NO. 624435 | SUBCONTRACT NO. | INEEL (Idaho National Engineering & Environmental Laboratory) BECHTEL BWXT IDAHO, LLC |
| SCALE: 1/2" = 1'-0" | REQUESTER: K ROGERS | INEEL OU 3-13 GROUP 7 VES-SFE-20 HOT WASTE TANK REMEDIAL DESIGN PHASE II PIPE CORRIDOR – DEMOLITION |
| | DESIGN: J BRUNSON | |
| | DRAWN: J MONCUR | |
| | PROJECT NO. 23052 | |
| | SPEC CODE | |
| DESIGN PHASE: AFC | FOR REVIEW/APPROVAL SIGNATURES SEE DAR NO. 102658 | SIZE D · CAGE CODE 01MF3 · INDEX CODE NUMBER AREA 200 TYPE 0648 CL 10 ORIG 090 · DWG-624448 · REV |
| SAFETY CATEGORY: CG | EFFECTIVE DATE: 6-26-03 | SCALE: NOTED · SHEET E-1 |

File: 624448.dwg
Path: X:\VES-SFE-20 Hot Waste Tank Remedial Design\Working DWGS\Layout Name: Layout1 Date: 11/06/25/03 - 3:13 P.M. ID: MXJ

Attachment 3
EDF-3282

To view this attachment see
EDF-3282, R0

Attachment 4
EDF-3266

To view this attachment see
EDF-3266, R0

To view this attachment see
EDF-3254, R0

Attachment 6
EDF-3273

To view this attachment see
EDF-3273, R0

**Attachment 7**
**EDF-2360**

To view this attachment see
EDF-2360, R0

To view this attachment see
DOE/ID-11047, R0

To view this attachment see
DOE/ID-11049, R0

To view this attachment see
INEEL/EXT-02-01436, R0