ABQ04

CALCULATION COVER SHEET

Project:	**INEEL V-Tank Remediation Project**				**Number of Sheets:** 1 of 16
Site:	Test Area North, Idaho Falls, Idaho				
Calculation Number:	ABQ04-HP004		**Work Order Number:**	12393.002.001	
Subject:	**Required treatment calculation of liquid-phase tank waste in order to ensure compliance with the Waste Acceptance Criteria (WAC) for disposal at Envirocare of Utah**				
Rev #:	**Date:**	**Revision:**	**Calculated by:**	**Checked:**	**Approved:**
RAA	5/31/01	90% Design	Carla Rellergert	Berg Keshian	
RAB	6/27/01	90% Polish	Carla Rellergert	Berg Keshian	
RAC	9/27/01	Draft Final	Carla Rellergert	Berg Keshian	Jim Lockhart
RAD	10/23/01	Draft Final Polish	Julie Steffes	Dan Brennecke	Jim Lockhart 10/24/01

Problem Statement:

Utilizing provided characterization data from references, determine the required treatment necessary to allow the liquid phase of tank waste to be shipped and disposed of at Envirocare of Utah, Inc. Compare known constituent concentrations from the liquid phase of each V-Tank waste with applicable land disposal restrictions treatment standards and Envirocare's Radioactive Materials License.

Method of Solution:

A review of existing chemical data for the liquid phase (and solid phase) of each V-Tank was performed and highest constituent concentrations were input into Excel 2000 tables (Calculation # ABQ03-HP003-RAD). A preliminary liquid waste determination and summary is provided as referenced herein, and applicable regulatory limits as well as wastewater and non-wastewater LDR treatment standards were also entered into these tables. A review of existing radiological data for the liquid phase of each tank was performed. Based on the radionuclides detected in the waste, a comparison table was created between the activity detected for each radionuclide and the average concentration per container allowed at Envirocare based on their Radioactive Materials License.

Assumptions:

1. The contents of each tank will eventually be separated into liquid and sludge/solid phases and each phase will be managed separately based on highest constituent concentrations present in that phase of the waste.

2. Dilution of the tank waste will not occur during phase separation.

3. The wastewater determination for the liquid phase of each tank may change after the waste is removed based on total organic concentration as well as total suspended solids concentration.

4. This review does not evaluate the V-Tank waste for compliance with DOT or determine the radionuclide concentration estimated per DOT container.

5. This review does not include a determination of whether the waste is classified as a Class A, B or C waste.

6. This review does not include a determination of applying the sum of fractions rule for waste containing more than one radionuclide.

7. This review does not include a determination of whether the waste is considered special nuclear material as defined in the Utah Administrative Code R313-12-3.

8. With regards to the characterization data, when constituents were not detected and the detection limit was below the applicable LDR treatment standard or Envirocare's Radioactive Material's license, it was assumed that the constituent was not present in the waste and was not evaluated for purposes of compliance with RCRA, TSCA requirements, or with Envirocare's WAC.

9. With regards to the characterization data, the highest reported concentration for the waste reviewed was included in the summary tables for comparison against regulatory limits, LDR treatment standards and average radionuclide concentration per container.

10. With regards to the chemical and radiological characterization data, it was assumed that only those constituents analyzed are considered contaminants of concern for this waste.

11. With regards to the chemical characterization data, when a constituent was not detected and the detection limit exceeded either the regulatory limit or the LDR treatment standard limit, it was assumed that those constituents could still be present and were assigned a D code or included as underlying hazardous constituents (UHCs) requiring treatment.

12. It is recognized that additional organic constituents may be present below the detection limit, and this has been accounted for in the factor of safety applied to the design of the carbon absorption system.

13. With regards to the chemical characterization data, it was assumed that the presence of Trichloroethene is considered an F001 listed waste for all the V-Tank waste based on historical information. Trichloroethene is also considered the only listed hazardous constituent associated with the V-Tank waste.

14. With regards to the chemical and radiological characterization data, all reported analytical results were representative of each phase of V-Tank waste.

15. PCBs are not an issue for the liquid phase of the V-Tank waste and will not be considered for purposes of shipping this waste to Envirocare.

Sources of Formulas and References:

1. Wastewater definition: Wastes that contain less than 1% by weight total organic carbon (TOC) and less than 1% by weight total suspended solids (TSS). Reference: RCRA Regulations and Keyword Index, 2000 Edition, Chapter 8, "40 CFR Part 268: Land Disposal Restrictions", specifically, 40 CFR 268.2 (f).

Characterization Data From:

Comprehensive Remedial Investigation/Feasibility Study (RI/FS) *for Test Area North Operable Unit 1-10 at INEEL,* DOE/ID-10557, November 1997, Dept. of Energy/Idaho Operations Office, Idaho Falls, ID.

Waste Acceptance From:

Waste Acceptance Guidelines of Envirocare of Utah, Inc., 46 West Broadway, Suite 116, Salt Lake City, Utah 84101; September 30, 1999.

Agreement-State Radioactive Material License, License #UT 2300249, amendment #11, issued by the Utah Division of Radiation Control (DRC).

Calculation:

Refer to Calculation number ABQ03-HP003-RAD Excel tables labeled "INEEL V-Tank Number VOC (or SVOC, Inorganic, Miscellaneous or PCB) Analysis on either Solid or Liquid Phase."

Discussion:

Ultimately, the management and eventual treatment and disposal of waste associated with the removal of the V-Tanks, will be based on the characterization of the V-Tank waste. A preliminary chemical characterization of the V-Tank waste was performed based on the separation of waste phases. A summary of the results are reported below:

Tank	Chemical Constituents Requiring Treatment
V-1	Tetrachloroethane, Trichloroethene, Mercury, Lead, and UHCs.
V-2	Trichloroethene and UHCs
V-3	Trichloroethene and UHCs
V-9	Methylene chloride,1,1,1-Trichloroethane, Trichloroethene, several SVOCs, Cadmium, Mercury, Lead, Nickel, and UHCs.

Table 5 in Attachment 1 lists the SVOC analytical results for each of the tanks and the LDR treatment standards for each SVOC.

Additional radiological sampling and analysis may also be required after on-site treatment. Therefore, this characterization is based on preliminary information.

Summary

The existing analytical data associated with the liquid waste from each tank was reviewed and a preliminary hazardous waste determination was developed as well as a list of detected radionuclides associated with the waste. Based on this review, the waste was compared to Envirocare's WAC. Primarily, the waste must be treated to meet the RCRA land disposal restrictions (LDR) concentration-based treatment standards for all applicable chemical constituents, and then stabilized prior to shipment and eventual disposal at Envirocare. Based on the present data no treatment for radionuclides will be required.

Conclusions and Recommendations:

1. Determine the activity of the liquid phase of the waste after on-site filtering and carbon absorption of the liquid phase of each tank waste to ensure compliance with Envirocare's WAC. Perform additional sampling and analysis if necessary.

2. Ensure waste was treated to meet applicable LDR requirements prior to stabilization and shipment to Envirocare.

3. Stabilize the liquid waste in a manner that minimizes volume increase as well as acceptable to Envirocare to manage as stabilized material.

Computer Source:

Compaq DeskPro with Microsoft Windows NT operating system and Office 2000 software.

ATTACHMENT 1 – REQUIRED TREATMENT TO ALLOW WATER TO BE SHIPPED TO ENVIROCARE

Required Treatment to Allow Water To Be Shipped to Envirocare

Based on Envirocare's Waste Acceptance Criteria (WAC) dated September 30, 1999:

- Envirocare is prohibited from accepting:
  - Radioactive waste classified as Class B or Class C waste
  - Radioactive waste in excess of the concentration limits per container for each radionuclide listed in its Radioactive Materials License.
  - Special Nuclear Material outside the limits of their SNM exemption certification.
  - Liquid radioactive waste
  - Solid radioactive waste containing free liquids
  - Bulk liquid wastes, non-aqueous liquids, or wastes with an organic liquid phase

- Envirocare's Radioactive Material License authorizes the receipt of radioactive waste in the form of soil or debris only.

- Envirocare can accept mixed waste for treatment using chemical stabilization (STABL), chemical oxidation (CHOXD), chemical reduction (CHRED), chemical deactivation (DEACT), neutralization (NEUTR), macroencapsulation (MACRO), and microencapsulation (MICRO).

- Radioactive mixed waste must meet the applicable land disposal restrictions or must be treated (using any of the specified methods listed above) prior to disposal on-site.

- For chemical fixation treatments, the waste must:
  - Must meet Envirocare's Radioactive Material License and RCRA Part B Permit.
  - Waste must be at or shreddable to a particle size of 3/8 inch.
  - Waste must not be subject to any other technology-based treatment standard.
  - Process is best for soils, sludges, and shreddable waste with little or no organics (<100 ppm).

- Envirocare requires third-party certified laboratory results prior to the approval of a waste stream and each laboratory must be Utah Certified for each method used to evaluate the waste stream.

Based on the above conditions, the water must be treated to meet the land disposal restrictions for each hazardous constituent present in the waste and the waste must be in a solid form prior to shipment to Envirocare. Therefore, the liquid waste must meet all applicable land disposal treatment standards prior to shipment and disposal at Envirocare.

Chemical Characterization

The following tables are for each chemical constituent associated with the liquid (water) phase of each tanks waste and the associated LDR treatment standard required by Envirocare's WAC, determined through the preliminary chemical characterization review based on existing analytical data provided by INEEL.

Note: The liquid phase of each tanks waste is considered a wastewater for purposes of complying with the land disposal restrictions, in that the liquid contains < 1% total organic carbon (TOC) and < 1% total suspended solids (TSS). The preliminary characterization was based on this assumption. If after removal of the waste from each tank, either the TOC or TSS exceed 1%, the waste must comply with the non-wastewater treatment standards also listed below.

Table 1. Tank V-1, Preliminary Liquid Phase Constituents Requiring Treatment			
Constituent (Waste Code)	**Concentration Detected in Waste (mg/L)**	**LDR Wastewater Treatment Standard (mg/L)**	**LDR Non-wastewater Treatment Standard (mg/kg)**
Antimony	1.9 (assumed)	1.9	1.15 mg/L
Lead (UHC)	0.84[J]	0.69	0.75 mg/L
Mercury (D009)	0.369	0.15 and meet §268.48 standards[1]	0.025 mg/L and meet §268.48 standards[1]
Chloromethane	0.19 (assumed)	0.19	30
Hexachlorobenzene	ND @ 1	0.055	10
Hexachlorobutadiene	ND @ 1	0.055	5.6
Tetrachloroethene (UHC)	0.14[J]	0.056	6.0
Trichloroethene (F001)	0.16[J]	0.054	6.0
UHCs (various)	See Table 5 for concentrations detected in Tank V-1 and applicable treatment standards.		
Additional process knowledge or re-analysis is required to determine if antimony, chloromethane and a majority of the SVOCs are considered underlying hazardous constituents (§ 268.48 standards) requiring treatment.			

[1] "§268.48 identifies universal treatment standards (UTS) for underlying hazardous constituents (UHCs) reasonably expected to be present at the point of generation at a concentration above the constituent-specific UTS treatment standards. For the liquid phase of Tank V-1, compliance with this standard has resulted in the identification of lead, antimony, chloromethane, tetrachloroethene and several SVOCs as UHCs, which are present at concentrations above the constituent-specific UTS treatment standard.

J = Estimated value
E = Exceeded calibration limit for instrument
R = Result rejected during validation and unusable
ND = Not Detected

Table 2. Tank V-2, Preliminary Liquid Phase Constituents Requiring Treatment			
Constituent (Waste Code)	**Concentration Detected in Waste (mg/L)**	**LDR Wastewater Treatment Standard (mg/L)**	**LDR Non-wastewater Treatment Standard (mg/kg)**
2,4-Dinitrotoluene	ND @ 1	0.32	140
Hexachlorobenzene	ND @ 1	0.055	10
Hexachlorobutadiene	ND @ 1	0.055	5.6
Trans-1,2-Dichloroethene	0.37[E, J]	0.054	30
Trichloroethene (F001)	0.3[E, J]	0.054	6.0
UHCs (various)	See Table 5 for concentrations detected in Tank V-2 and applicable treatment standards.		

J = Estimated value
E = Exceeded calibration limit for instrument
R = Result rejected during validation and unusable
ND = Not Detected

Table 3. Tank V-3, Preliminary Liquid Phase Constituents Requiring Treatment			
Constituent (Waste Code)	**Concentration Detected in Waste (mg/L)**	**LDR Wastewater Treatment Standard (mg/L)**	**LDR Non-wastewater Treatment Standard (mg/kg)**
Chloromethane	0.01[R]	0.19	30
2,4-Dinitrotoluene	ND @ 1	0.32	140
Hexachlorobenzene	ND @ 1	0.055	10
Hexachlorobutadiene	ND @ 1	0.055	5.6
Trichloroethene (F001)	0.2	0.054	6.0
UHCs (various)	See Table 5 for concentrations detected in Tank V-3 and applicable treatment standards.		

J = Estimated value
E = Exceeded calibration limit for instrument
R = Result rejected during validation and unusable
ND = Not Detected

Table 4. Tank V-9, Preliminary Liquid Phase Constituents Requiring Treatment			
Constituent (Waste Code)	**Concentration Detected in Waste (mg/L)**	**LDR Wastewater Treatment Standard (mg/L)**	**LDR Non-wastewater Treatment Standard (mg/kg)**
Cadmium (D006)	1.9	0.69	0.11 mg/L TCLP and meets 40 CFR 268.48 standards[1]
Lead (D008)	0.942	0.69	0.75 mg/L TCLP
Mercury (D009)	0.563	0.15 and meets §268.48 standards[1]	0.025 mg/L TCLP and meets 40 CFR 268.48 standards[1]

Table 4. Tank V-9, Preliminary Liquid Phase Constituents Requiring Treatment			
Constituent (Waste Code)	**Concentration Detected in Waste (mg/L)**	**LDR Wastewater Treatment Standard (mg/L)**	**LDR Non-wastewater Treatment Standard (mg/kg)**
Nickel (UHC)	13.8	3.98	11 mg/L TCLP
Benzene (D018)	ND @ 17	0.14	10 and meets 268.48 standards[1]
Chloroform (D022)	ND @ 10	0.046	6 and meets §268.48 standards[1]
1,2-Dichloroethane (D028)	ND @ 25	0.21	6 and meets §268.48 standards[1]
1,1-Dichloroethene (D029)	ND @ 11	0.025	6 and meets §268.48 standards[1]
3,3 Dichlorobenzidene (Dibenz (a,h) anthracene (UHC)	ND @ 0.66	0.055	8.2
2,4-Dimethylphenol (UHC)	0.079	0.036	14
Indeno (1,2,3-cd) pyrene (UHC)	ND @ 0.036	0.0055	3.4
Methylene Chloride (UHC)	59.0[J]	0.089	30
2-Methylphenol (o-creosol) (UHC)	0.83[E]	0.11	5.6
4-Methylphenol (p-creosol) (UHC)	0.83[E]	0.77	5.6
Phenol (UHC)	0.1[E]	0.039	6.2
Tetrachloroethene (D039)	ND @ 17	0.056	6
1,1,1-Trichloroethane (UHC)	58[J]	0.054	6.0
Trichloroethene (F001)	410	0.054	6.0
Additional process knowledge or re-analysis is required to determine if a majority of the VOCs are considered underlying hazardous constituents (UHCs) requiring treatment.			

[1] "§268-48 identifies universal treatment standards (UTS) for underlying hazardous constituents (UHCs) reasonably expected to be present at the point of generation at a concentration above the constituent-specific UTS treatment standards. For the liquid phase of Tank V-9, compliance with this standard has resulted in the identification of lead, nickel, VOCs and SVOCs as UHCs which are present at concentrations above the constituent-specific UTS treatment standard."

J = Estimated value
E = Exceeded calibration limit for instrument
R = Result rejected during validation and unusable
ND = Not Detected

Table 5. SVOC Concentrations and Treatment Standards for Liquids in Tanks V-1, V-2, V-3, and V-9.						
	Concentration (mg/L)				LDR Treatment Standard for Wastewater (mg/L)	LDR Treatment Standard for Non-wastewater (mg/kg)
Constituent	V-1	V-2	V-3	V-9		
Acenaphthene	U (1)	U (1)	U (1)	U (0.006)	0.059	3.4
Acenaphthylene	U (1)	U (1)	U (1)	U (0.007)	0.059	3.4
Anthracene	U (1)	U (1)	U (1)	U (0.005)	0.059	3.4
Benzo (a) anthracene	U (1)	U (1)	U (1)	U (0.008)	0.059	3.4
Benzo (a) pyrene	U (1)	U (1)	U (1)	U (0.001)	0.061	3.4
Benzo (b) fluoranthene	U (1)	U (1)	U (1)	U (0.007)	0.11	6.8
Benzo (g,h,I) perylene	U (1)	U (1)	U (1)	U (0.003)	0.0055	1.8
Benzo (k) fluoranthene	U (1)	U (1)	U (1)	U (0.006)	0.11	6.8
Butylbenzylphthalate	U (1)	U (1)	U (1)	U (0.008)	0.017	28
Bis (2-chloroethoxy)methane	U (1)	U (1)	U (1)	U (0.008)	0.036	7.2
Bis (2-chloroethyl)ether	U (1)	U (1)	U (1)	U (0.007)	0.033	6
Bis (2-chloroisopropyl) ether	U (1)	U (1)	U (1)	U (0.006)	0.055	7.2
Bis (2-ethylhexyl) phthalate	**0.083 J**	**0.2 J**	**0.1 J**	0.038	0.28	28
4-Bromophenyl-phenylether	U (1)	U (1)	U (1)	U (0.007)	0.055	15
Chrysene	U (1)	U (1)	U (1)	U (0.008)	0.059	3.4
4-Chloroaniline (p-chloroaniline)	U (1)	U (1)	U (1)	U (0.027)	0.46	16
4-Chloro-3-Methylphenol (p-chloro-m-cresol)	U (1)	U (1)	U (1)	U (0.008)	0.018	14
2-Chloronaphthalene	U (1)	U (1)	U (1)	U (0.010)	0.055	5.6
2-Chlorophenol	U (1)	U (1)	U (1)	U (0.006)	0.044	5.7
Dibenz(a,h)anthracene	U (1)	U (1)	U (1)	U (0.005)	0.055	8.2
1,2-Dichlorobenzene (o-dichlorobenzene)	U (1)	U (1)	U (1)	**0.210E**	0.088	6
1,3-Dichlorobenzene (m-dichlorobenzene)	U (1)	U (1)	U (1)	U (0.006)	0.036	6
1,4-Dichlorobenzene (p-dichlorobenzene)	U (1)	U (1)	U (1)	0.049	0.09	6

Table 5. SVOC Concentrations and Treatment Standards for Liquids in Tanks V-1, V-2, V-3, and V-9.						
	Concentration (mg/L)				LDR Treatment Standard for Wastewater (mg/L)	LDR Treatment Standard for Non-wastewater (mg/kg)
Constituent	**V-1**	**V-2**	**V-3**	**V-9**		
3,3-Dichlorobenzidine (Dibenz (a,h) anthracene)	U (1)	U (1)	U (1)	U (0.066)	0.055	8.2
2,4-Dichlorophenol	U (1)	U (1)	U (1)	U (0.008)	0.044	14
Diethylphthalate	U (1)	U (1)	U (1)	U (0.008)	0.2	28
2,4-Dimethylphenol	U (1)	U (1)	U (1)	**0.079**	0.036	14
Dimethylphthalate	U (1)	U (1)	U (1)	U (0.007)	0.047	28
Di-n-butylphthalate	U (1)	U (1)	U (1)	U (0.003)	0.057	28
Di-n-octylphthalate	U (1)	U (1)	U (1)	0.006J	0.017	28
2,4-Dinitrophenol	U (5)	U (5)	U (5)	U (0.027)	0.12	160
2,4-Dinitrotoluene	U (1)	U (1)	U (1)	U (0.010)	0.32	140
2,6-Dinitrotoluene	U (1)	U (1)	U (1)	U (0.008)	0.55	28
Fluoranthene	U (1)	U (1)	U (1)	U (0.008)	0.068	3.4
Fluorene	U (1)	U (1)	U (1)	U (0.005)	0.059	3.4
Hexachlorobenzene	U (1)	U (1)	U (1)	U (0.007)	0.055	10
Hexachlorobutadiene (Hexachloro-1,3-butadiene	U (1)	U (1)	U (1)	U (0.010)	0.055	5.6
Hexachlorocyclopentadiene	U (1)	U (1)	U (1)	U (0.013)	0.057	2.4
Hexachloroethane	U (1)	U (1)	U (1)	U (0.008)	0.055	30
Indeno (1,2,3-cd) pyrene	U (1)	U (1)	U (1)	**U (0.036)**	0.0055	3.4
2-Methylphenol (o-cresol)	U (1)	U (1)	U (1)	**0.830 E**	0.11	5.6
4-Methylphenol (p-cresol)	U (1)	U (1)	U (1)	**0.830 E**	0.77	5.6
Naphthalene	U (1)	U (1)	U (1)	U (0.008)	0.059	5.6
2-Nitroaniline (o-nitroaniline)	U (5)	U (5)	U (5)	U (0.006)	0.27	14
4-Nitroaniline (p-nitroaniline)	U (5)	U (5)	U (5)	U (0.004)	0.028	28
Nitrobenzene	U (1)	U (1)	U (1)	U (0.009)	0.068	14

Table 5. SVOC Concentrations and Treatment Standards for Liquids in Tanks V-1, V-2, V-3, and V-9.						
	Concentration (mg/L)				LDR Treatment Standard for Wastewater (mg/L)	LDR Treatment Standard for Non-wastewater (mg/kg)
Constituent	V-1	V-2	V-3	V-9		
2-Nitrophenol (o-nitrophenol)	U (1)	U (1)	U (1)	U (0.007)	0.028	13
4-Nitrophenol (p-nitrophenol)	U (5)	U (5)	U (5)	0.037	0.12	29
N-nitroso-dimethylamine	---	U (1)	---	U (0.011)	0.4	2.3
N-nitroso-di-n-propylamine (Di-n-propylnitrosamine)	U (1)	U (1)	U (1)	U (0.013)	0.4	14
N-nitrosodiphenylamine (Diphenylnitrosamine)	U (1)	U (1)	U (1)	U (0.010)	0.92	13
Pentachlorophenol	U (5)	U (5)	U (5)	U (0.013)	0.089	7.4
Phenanthrene	U (1)	U (1)	U (1)	U (0.006)	0.059	5.6
Phenol	U (1)	U (1)	U (1)	**0.100E**	0.039	6.2
Pyrene	U (1)	U (1)	0.063 J	U (0.012)	0.067	8.2
Pyridine	U (1)	U (1)	U (1)	U (0.010)	0.014	16
1,2,4-Trichlorobenzene	U (1)	U (1)	U (1)	U (0.007)	0.055	19
2,4,5-Trichorophenol	U (5)	U (5)	U (5)	U (0.017)	0.18	7.4
2,4,6-Trichlorophenol	U (1)	U (1)	U (1)	U (0.010)	0.035	7.4

Notes:

1. Shaded boxes indicate UHCs where the detection limit is above the treatment standard and where the value recorded was below detection limits.

2. SVOCs without applicable treatment standards were not included in this table.

U = Not Detected (detection limit in parenthesis)
J = Estimated Value
E = Concentration exceeded the calibration range of the instrument

Radiological Characterization

The following tables identify only those radionuclides detected in the liquid phase of the waste from each tank, compared to the radionuclide limits as defined in Envirocare's Radioactive Material License, Amendment # 11, which expires on October 22, 2003.

Tank V-1, Preliminary Liquid Phase Radioactive Material		
Radionuclide	**Activity Detected (pCi/L)***	**Envirocare Waste Acceptance Criteria (Average Concentration per Container) (pCi/kg)**
U-233/234	1.89E+04 ±643	7.5E+07/3.7E+08
U-235	5.66E+02 ±21.8	1.9E+06[2]
U-238	2.1E+02 ±8.91	3.3E+08[3]
Pu-238	2.24E+02 ± 10.5	1.0E+07
Pu-239/240	1.05E+02 ± 6.64	1.0E+07/1.0E+07
Am-241	1.97E+02 ±9.21	1.0E+07
Cm-242	U (8.61)	2.0E+09
Cm-243/244	6.42E+01 ± 4.72	1.0E+07/1.0E+07
Np-237	U (26.7)	1.0E+07[3]
Sr-90	2.03E+06 ± 9010	2.5E+07[2]
Ag-108m	U (776)	5.0E+07[2]
Ag-110m	U (1270)	4.4E+11[2]
Am-241[1]	U (1350)	1.0E+07
Ce-144	U (7530)	4.4E+11[2]
Co-58	U (2160)	4.4E+11
Co-60	1.55E+04 ± 848	3.0E+07
Cs-134	U (734)	4.4E+11
Cs-137	2.9E+06 ± 134000	6.0E+07[2]
Eu-152	U (4860)	2.0E+07
Eu-154	U (1660)	3.0E+07
Eu-155	U (2420)	4.4E+11
Mn-54	U (755)	4.4E+11
Nb-95	U (2400)	NA
Ra-226	U (1260)	1.0E+07[2]
Ru-103	U (12900)	5.0E+05
Ru-106	U (9430)	4.4E+11[2]
Sb-125	U (3870)	4.4E+11[2]
U-235[1]	U (1340)	1.9E+06[2]
Zn-65	U (1730)	4.4E+11
Zr-95	U (4300)	4.4E+11
I-129	U (252)	3.1E+06
H-3	3.04E+07 ± 3160000	2.5E+10
Ni-63	2.88E+05 ±20700	2.2E+09

U = Not detected, detection limit given in parenthesis.

[1] Analysis by gamma spectroscopy

[2] Decay products are assumed to be present in concentrations equal to the parent.

[3] Short-lived decay products of U-238 (Th-234, Pa-234m and Pa-234); Np-237 (Pa-233); and Plutonium 244 (U-240, Np-240m, and Np-240) are assumed to be present in concentrations equal to the parent.

*It is assumed that the density of the liquid phase is close to the density of water and pCi/L is equivalent to pCi/kg.

Tank V-2, Preliminary Liquid Phase Radioactive Material		
Radionuclide	**Activity Detected (pCi/L)***	**Envirocare Waste Acceptance Criteria (Average Concentration per Container) (pCi/kg)**
U-233/234	3.86E+04 ± 1300	7.5E+07/3.7E+08
U-235	1.6E+03 ± 56.2	1.9E+06[2]
U-238	4.99E+02 ±17.6	3.3E+08[3]
Pu-238	4.75E+02 ± 17.3	1.0E+07
Pu-239/240	2.83E+02 ± 12	1.0E+07/1.0E+07
Am-241	5.89E+01 ± 4.88	1.0E+07
Cm-242	U (4.96)	2.0E+09
Cm-243/244	1.62E+01 ± 2.48	1.0E+07/1.0E+07
Np-237	U (27.6)	1.0E+07[3]
Sr-90	4.9E+06 ± 17400	2.5E+07[2]
Ag-108m	U (3960)	5.0E+07[2]
Ag-110m	U (7120)	4.4E+11[2]
Am-241[1]	U (15900)	1.0E+07
Ce-144	U (37800)	4.4E+11[2]
Co-58	U (1600)	4.4E+11
Co-60	1.3E+04 ± 799	3.0E+07
Cs-134	U (764)	4.4E+11
Cs-137	1.35E+07 ± 617000	6.0E+07[2]
Eu-152	U (4760)	2.0E+07
Eu-154	U (1820)	3.0E+07
Eu-155	U (14400)	4.4E+11
Mn-54	U (716)	4.4E+11
Nb-95	U (1960)	NA
Ra-226	U (4100)	1.0E+07[2]
Ru-103	U (36000)	5.0E+05
Ru-106	U (46200)	4.4E+11[2]
Sb-125	U (18400)	4.4E+11[2]
U-235[1]	U (6450)	1.9E+06[2]
Zn-65	U (1700)	4.4E+11
Zr-95	U (3210)	4.4E+11
I-129	U (169)	3.1E+06
H-3	1.02E+08 ±1.07E+07	2.5E+10
Ni-63	4.48E+05 ± 32300	2.2E+09

U = Not detected, detection limit given in parenthesis.

[1] Analysis by gamma spectroscopy

[2] Decay products are assumed to be present in concentrations equal to the parent.

[3] Short-lived decay products of U-238 (Th-234, Pa-234m and Pa-234); Np-237 (Pa-233); and Plutonium 244 (U-240, Np-240m, and Np-240) are assumed to be present in concentrations equal to the parent.

*It is assumed that the density of the liquid phase is close to the density of water and pCi/L is equivalent to pCi/kg.

Tank V-3, Preliminary Liquid Phase Radioactive Material		
Radionuclide	**Activity Detected (pCi/L)***	**Envirocare Waste Acceptance Criteria (Average Concentration per Container) (pCi/kg)**
U-233/234	1.33E+04 ± 443	7.5E+07/3.7E+08
U-235	4.01E+02 ± 15.2	1.9E+06[2]
U-238	1.35E+02 ± 5.97	3.3E+08[3]
Pu-238	3.83E+01 ± 3.35	1.0E+07
Pu-239/240	1.97E+01 ± 2.36	1.0E+07/1.0E+07
Am-241	3.18E+01 ± 3.16	1.0E+07
Cm-242	U (6.18)	2.0E+09
Cm-243/244	U (6.28)	1.0E+07/1.0E+07
Np-237	U (36.4)	1.0E+07[3]
Sr-90	1.23E+07 ± 21900	2.5E+07[2]
Ag-108m	U (343)	5.0E+07[2]
Ag-110m	U (906)	4.4E+11[2]
Am-241[1]	U (1780)	1.0E+07
Ce-144	U (3000)	4.4E+11[2]
Co-58	U (284)	4.4E+11
Co-60	1.48E+04 ± 829	3.0E+07
Cs-134	4.49E+02 ± 52.7	4.4E+11
Cs-137	4.23E+06 ± 195000	6.0E+07[2]
Eu-152	U (693)	2.0E+07
Eu-154	U (213)	3.0E+07
Eu-155	U (1170)	4.4E+11
Mn-54	U (106)	4.4E+11
Nb-95	U (319)	NA
Ra-226	U (332)	1.0E+07[2]
Ru-103	U (5640)	5.0E+05
Ru-106	U (4080)	4.4E+11[2]
Sb-125	U (1900)	4.4E+11[2]
U-235[1]	U (533)	1.9E+06[2]
Zn-65	U (237)	4.4E+11
Zr-95	U (549)	4.4E+11
I-129	U (108)	3.1E+06
H-3	6.09E+06 ± 633000	2.5E+10
Ni-63	2.05E+05 ±14800	2.2E+09

U = Not detected, detection limit given in parenthesis.

[1] Analysis by gamma spectroscopy

[2] Decay products are assumed to be present in concentrations equal to the parent.

[3] Short-lived decay products of U-238 (Th-234, Pa-234m and Pa-234); Np-237 (Pa-233); and Plutonium 244 (U-240, Np-240m, and Np-240) are assumed to be present in concentrations equal to the parent.

*It is assumed that the density of the liquid phase is close to the density of water and pCi/L is equivalent to pCi/kg.

Tank V-9, Preliminary Liquid Phase Radioactive Material		
Radionuclide	**Activity Detected (pCi/L)***	**Envirocare Waste Acceptance Criteria (Average Concentration per Container) (pCi/kg)**
U-233[1]	1.24E+04	7.5E+07
U-234[1]	2.11E+05	3.7E+08
U-235[1]	6.9E+03	1.9E+06[2]
U-236[1]	3.26E+03	3.8E+08
U-238[1]	9.72E+02	3.3E+08[3]
Pu-238	1.7E+05 ± 12900	1.0E+07
Pu-239/240	4.53E+04 ± 3690	1.0E+07/1.0E+07
Am-241	4.02E+04 ± 2500	1.0E+07
H-3	3.53E+08 ± 180000	2.5E+10
Cm-244	5.21E+03 ± 390	1.0E+07/1.0E+07
Np-237	2.0E+02 ± 36	1.0E+07[3]
Total Sr	4.9E+06 ± 17400	Each isotope separated
Co-60	1.18E+03 ± 59.4	3.0E+07
Cs-137	4.2E+05 ± 162000	6.0E+07[2]
Eu-152	5.66E+02 ± 37	2.0E+07
Eu-154	2.72E+02 ± 22.8	3.0E+07

[1] Analysis by inductively coupled plasma mass spectroscopy.

[2] Decay products are assumed to be present in concentrations equal to the parent.

[3] Short-lived decay products of U-238 (Th-234, Pa-234m and Pa-234); Np-237 (Pa-233); and Plutonium 244 (U-240, Np-240m, and Np-240) are assumed to be present in concentrations equal to the parent.

*It is assumed that the density of the liquid phase is close to the density of water and pCi/L is equivalent to pCi/kg.

Note: For waste containing more than one radionuclide, the waste must be classified by applying the sum of fractions rule as described in Envirocare's WAC. In addition, if this waste is expected to contain special nuclear material (SNM), additional limits and conditions will apply to this waste, which have not been discussed below.

ABQ05

CALCULATION COVER SHEET

WESTON
MANAGERS DESIGNERS/CONSULTANTS

Project:	**INEEL V-Tank Remediation Project**				**Number of Sheets:** 1 of 40
Site:	INEEL Test Area North, Idaho Falls, Idaho				
Calculation Number:	ABQ05 – CE001		**Work Order Number:**	12393.002.001	
Subject:	**Excavation – Preliminary Estimate of Shoring Requirements**				
Rev #	**Date:**	**Revision:**	**Calculated by:**	**Checked by:**	**Approved:**
RAA	4/11/01	60%	Rob Ederer	N/A	N/A
RAB	6/1/01	90%	Rob Ederer	Dan Brennecke	Berg Keshian
RAC	6/27/01	90% Polish	Berg Keshian	Dan Brennecke	
RAD	9/27/01	Draft Final	Berg Keshian	Dan Brennecke	9/28/01

Problem Statement:

Determine loading stress required to be resisted by shoring.

Method of Solution:

1. Determine soil type
2. Determine angle of friction
3. Determine the soil pressure on shoring or trench box
4. Determine distribution of soil pressure.

Assumptions:

1. Soil type is the same throughout the site.
2. Information provided by INEEL is correct.

Sources of Formulas and References:

Geotech Soils Report, WAG 1 TSF-09/18

Soil Mechanics
NAVFAC DM-7-1
May 1982
Pg 7.1 - 147

Soil Mechanics	
NAVFAC DM-7-1	DM 7-2
March 1971	May 1982
Pg 7 - 9-2	Pg 7.2-62

Calculation:

See attached.

Shoring Available with Existing Stresses:

Based on existing stresses and per Speed Shore's manufacturer's tabulated data for double-wall trench shield, model TS-1024-DW8 has a 24 foot length, a shield capacity of 1,100 psf, which is above the required calculated stress of 671 psf, and is allowable for up to 22 feet of depth for type C(60) soils. Two 10-foot deep shields can be stacked to a total depth of 20 feet, which is adequate for the expected excavation of 20 feet. Two TS-1024-DW8s will accommodate a 48-foot long excavation length. Reinforced steel plates can be welded to ends of shields to provide total enclosure of excavation.

Speed Shore trench shields are designed and certified by Registered Professional Engineers, are made of steel construction, can be customized to accommodate the V-tank site conditions and are commercially available. Speed Shore trench shields or a similar product are recommended for this application.

Summary of Results:

Soil function angle = 32 degrees
Soil Cohesion = 0
Soil Type = SW-SP
Stress on shoring = 671 psf

WESTON MANAGERS DESIGNERS CONSULTANTS

CLIENT/SUBJECT V TANKS W.O. NO.

TASK DESCRIPTION Soil Strength determination TASK NO.

PREPARED BY B KESHIAN DEPT DATE 5/28/01

MATH CHECK BY DEPT DATE

METHOD REV. BY DEPT DATE

APPROVED BY

DEPT DATE

Determine Strength / Friction Angle of Soils Surrounding V TANKS

Ref. - Geotech Soils Report
WAG 1
TSF - 09/18
ISU Engineering data

- Soil Mechanics
NAVFAC DM-7-1
MAY 1982
Pg 7.1-149

DM 7-2
May 1982
Pg 7.2-62

- Soil Mechanics
NAVFAC DM 7-1
MARCH 1971
Pg 7-9-2

From Soils Report

Grain size shows that soils are a silty sand

$\gamma_d = 1.53 g/cm^3 \times 62.4 \#/cf = 95.5 \#/cf$

Grain size classifies soil as a SM-SP by unified soil classification system

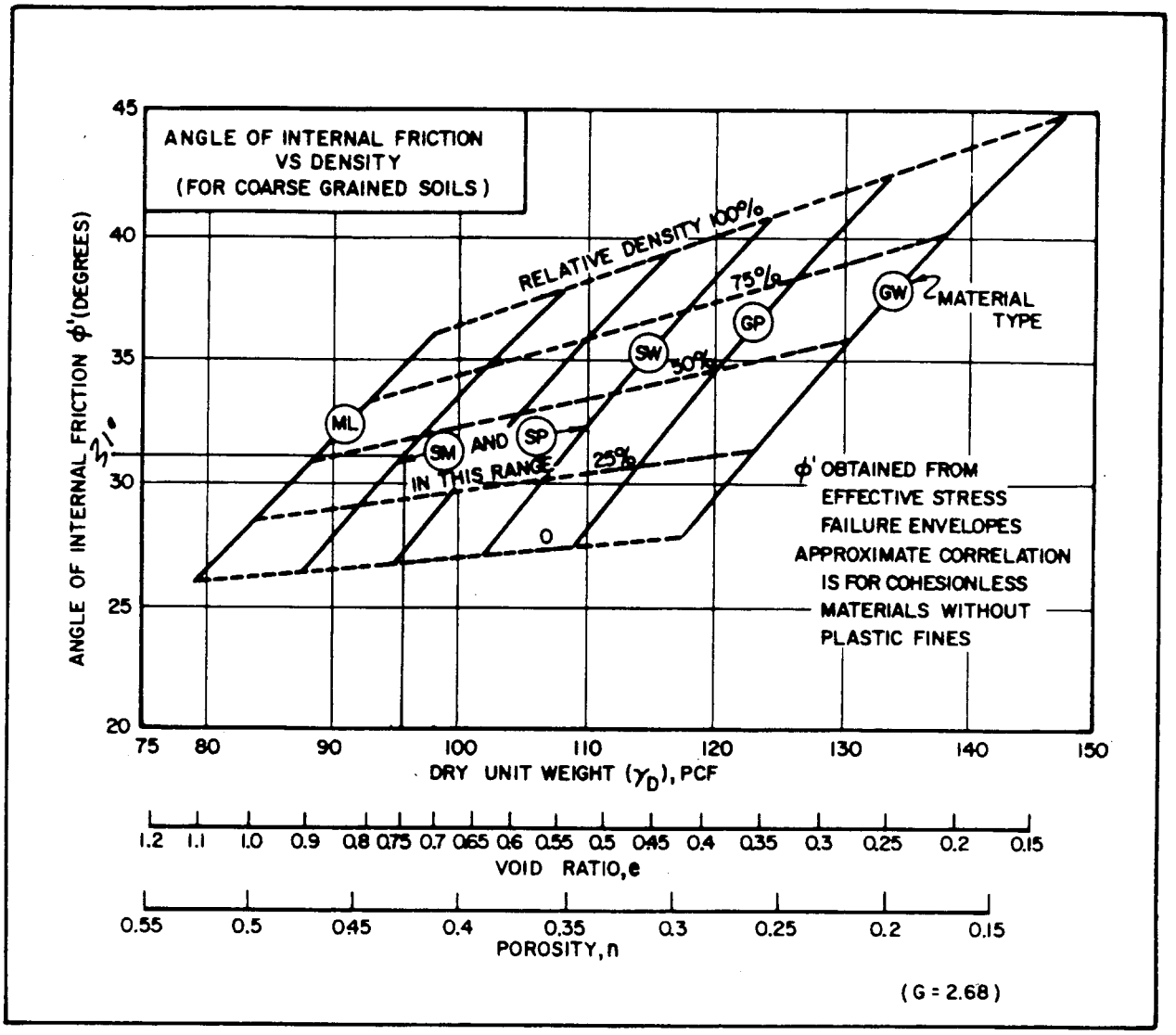

FIGURE 7
Correlations of Strength Characteristics for Granular Soils

TABLE 9-1
Typical Properties of Compacted Materials

Group symbol	Soil type	Range of maximum dry unit weight, pcf	Range of optimum moisture, percent	Typical value of compression: At 1.4 tsf (20 psi)	Typical value of compression: At 3.6 tsf (50 psi)	Typical strength characteristics: Cohesion (as compacted) psf	Typical strength characteristics: Cohesion (saturated) psf	Typical strength characteristics: ϕ (Effective stress envelope) degrees	Typical strength characteristics: Tan ϕ	Typical coefficient of permeability ft/min.	Range of CBR values	Range of subgrade modulus k lb/cu in.
				Typical value of compression: percent of original height								
GW	Well graded clean gravels, gravel-sand mixtures.	125 - 135	11 - 8	0.3	0.6	0	0	>38	>0.79	5×10^{-2}	40 - 80	300 - 500
GP	Poorly graded clean gravels, gravel-sand mix.	115 - 125	14 - 11	0.4	0.9	0	0	>37	>0.74	10^{-1}	30 - 60	250 - 400
GM	Silty gravels, poorly graded gravel-sand-silt.	120 - 135	12 - 8	0.5	1.1	.....	.....	>34	>0.67	$>10^{-6}$	20 - 60	100 - 400
GC	Clayey gravels, poorly graded gravel-sand-clay.	115 - 130	14 - 9	0.7	1.6	.....	.....	>31	>0.60	$>10^{-7}$	20 - 40	100 - 300
SW	Well graded clean sands, gravelly sands.	110 - 130	16 - 9	0.6	1.2	0	0	38	0.79	$>10^{-3}$	20 - 40	200 - 300
SP	Poorly graded clean sands, sand-gravel mix.	100 - 120	21 - 12	0.8	1.4	0	0	37	0.74	$>10^{-3}$	10 - 40	200 - 300
SM	Silty sands, poorly graded sand-silt mix.	110 - 125	16 - 11	0.8	1.6	1050	420	34	0.67	5×10^{-5}	10 - 40	100 - 300
SM-SC	Sand-silt clay mix with slightly plastic fines.	110 - 130	15 - 11	0.8	1.4	1050	300	33	0.66	2×10^{-6}	.....	
SC	Clayey sands, poorly graded sand-clay mix.	105 - 125	19 - 11	1.1	2.2	1550	230	31	0.60	5×10^{-7}	5 - 20	100 - 300
ML	Inorganic silts and clayey silts .	95 - 120	24 - 12	0.9	1.7	1400	190	32	0.62	10^{-5}	15 or less	100 - 200
ML-CL	Mixture of inorganic silt and clay	100 - 120	22 - 12	1.0	2.2	1350	460	32	0.62	5×10^{-7}	.....	
CL	Inorganic clays of low to med. plasticity.	95 - 120	24 - 12	1.3	2.5	1800	270	28	0.54	10^{-7}	15 or less	50 - 200
OL	Organic silts and silt-clays, low plasticity.	80 - 100	33 - 21	.....	.....	.....	.....	.....	.....	.....	5 or less	50 - 100
MH	Inorganic clayey silts, elastic silts.	70 - 95	40 - 24	2.0	3.8	1500	420	25	0.47	5×10^{-7}	10 or less	50 - 100
CH	Inorganic clays of high plasticity	75 - 105	36 - 19	2.6	3.9	2150	230	19	0.35	10^{-7}	15 or less	50 - 150
OH	Organic clays and silty clays . . .	65 - 100	45 - 21	.....	.....	.....	.....	.....	.....	.....	5 or less	25 - 100

Notes:
1. All properties are for condition of "standard Proctor" maximum density, except values of k and CBR which are for "modified Proctor" maximum density.
2. Typical strength characteristics are for effective strength envelopes and are obtained from USBR data.
3. Compression values are for vertical loading with complete lateral confinement.
4. (>) indicates that typical property is greater than the value shown.
(....) indicates insufficient data available for an estimate.

WESTON
MANAGERS DESIGNERS/CONSULTANTS

SHEET ____ of ____ 6 OF 40

CLIENT/SUBJECT _____ W.O. NO. _____

TASK DESCRIPTION _____ TASK NO. _____

PREPARED BY _____ DEPT _____ DATE _____

MATH CHECK BY _____ DEPT _____ DATE _____

METHOD REV. BY _____ DEPT _____ DATE _____

APPROVED BY _____

DEPT _____ DATE _____

Using this data and charts from DM 7-1
TABLE 9-1
Figure 7

it can be seen that the ~~[illegible]~~ effective friction angle for the soils will Range from 31° to 37° with no Cohession

Since the Soil is CLOSER to an SP material A Conservative assumption is that

$\phi = 32°$ C=0

USE This data to determine the Soil Pressures for Shoring or Trench bases

RFW 10-05-003/A-5/85
512-5643

WESTON

SHEET ____ of ____

CLIENT/SUBJECT _____ W.O. NO. _____

TASK DESCRIPTION Active Pressures for Shoring TASK NO. _____

PREPARED BY _____ DEPT _____ DATE _____

MATH CHECK BY _____ DEPT _____ DATE _____

METHOD REV. BY _____ DEPT _____ DATE _____

APPROVED BY _____ DEPT _____ DATE _____

Figure 2

Pg ~~Figure~~ 7.2-62

GRANULAR Soil

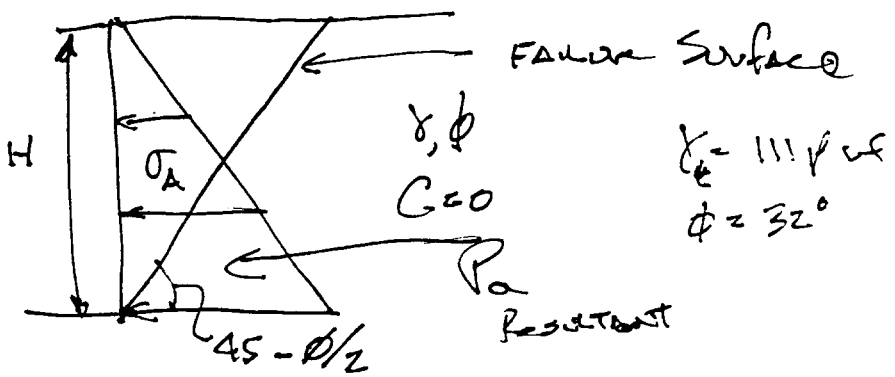

$$K_A = \tan^2(45 - \phi/2)$$

$\phi = 32°$

$(45 - \phi/2) = 29$

$K_A \tan^2 = .31$

$$P_A = K_A \gamma H^2/2$$

$$= .31 \times 111 \times \frac{20^2}{2} = 6821 \text{ lbs/LF}$$

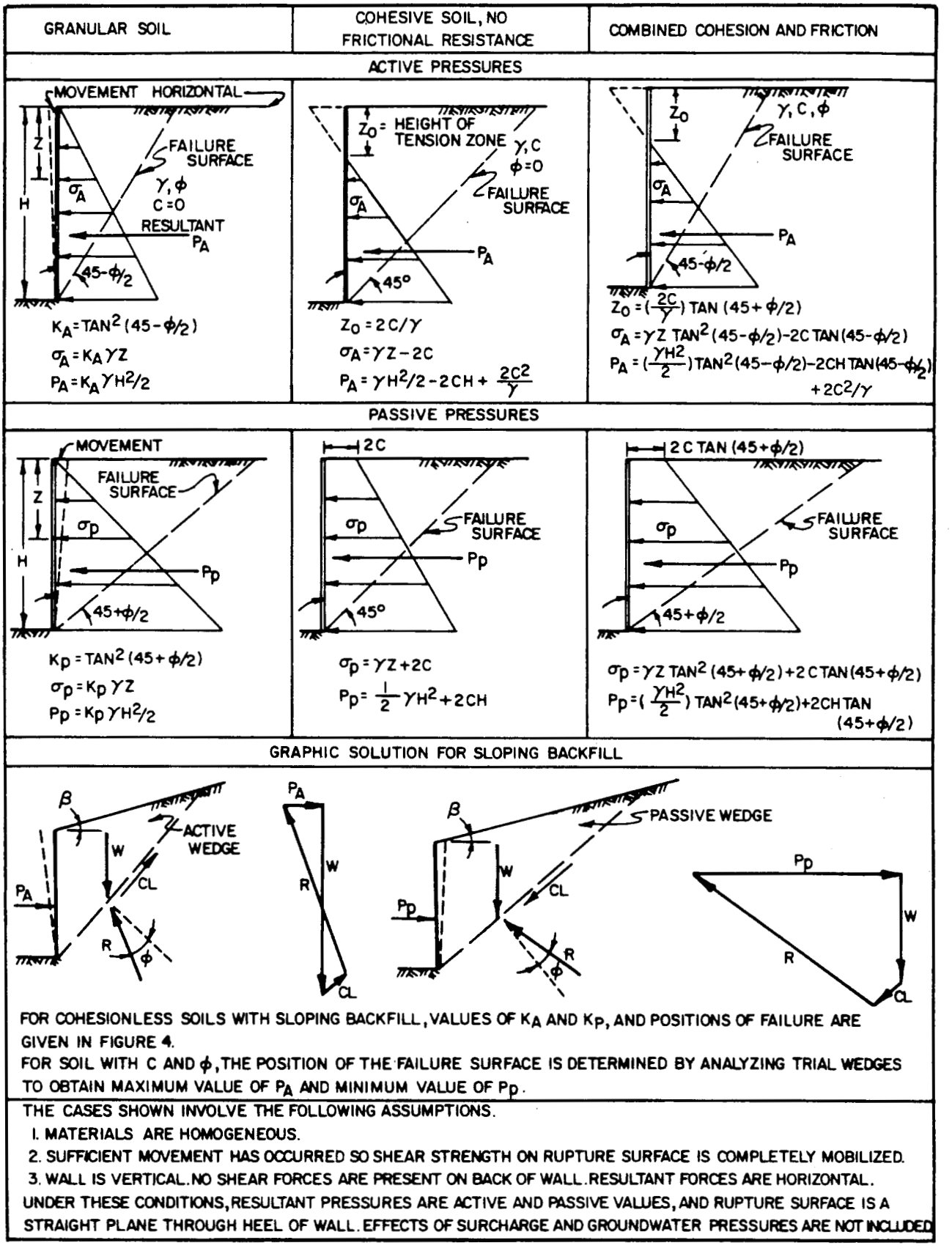

FIGURE 2
Computation of Simple Active and Passive Pressures

CLIENT/SUBJECT _____ W.O. NO. _____

TASK DESCRIPTION _____ TASK NO. _____

PREPARED BY _____ DEPT _____ DATE _____

MATH CHECK BY _____ DEPT _____ DATE _____

METHOD REV. BY _____ DEPT _____ DATE _____

APPROVED BY _____ DEPT _____ DATE _____

Now Determine distribution of Soil Pressures behind Shoring

For Cohessionless Soils

Pg 7.2-100
Figure 26

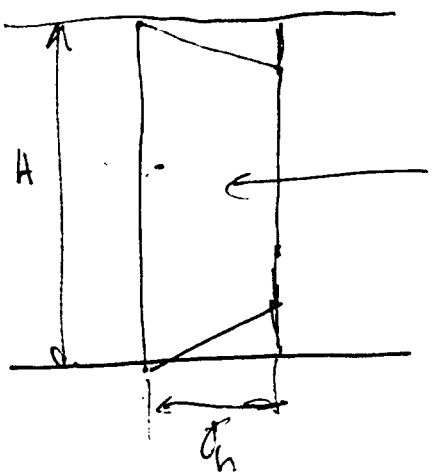

$P_a = 6821$ #/LF

or 341 #/LF/LF

$\sigma_h = .65\ K_A \cdot \gamma \cdot h$

$= .65 \times .31 \cdot 111 \cdot 20$

$= 447.3$ #/LF ← Use this As Stress on Shoring Then Apply Factor of Safety of 1.5

$\therefore\ 1.5 \times 447.3 = 671$ #/LF

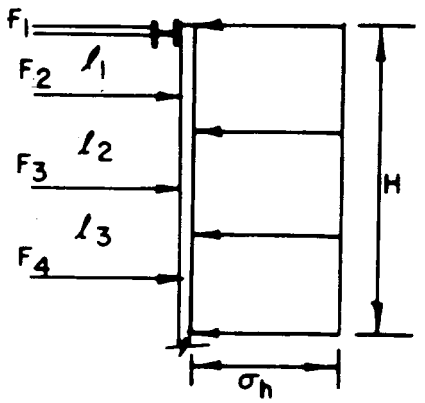

(a) SAND

$\sigma_h = 0.65\ K_A \cdot \gamma H$

WHERE $K_A = \tan^2(45 - \phi/2)$

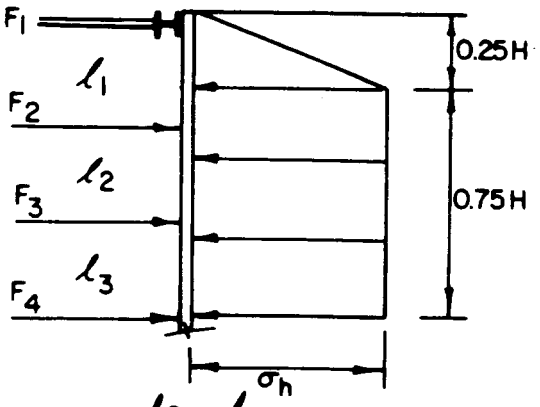

$F_3 = \left(\frac{l_2}{2} + \frac{l_3}{2}\right)\sigma_h$

ASSUME HINGES AT STRUT LOCATIONS FOR CALCULATING STRUT FORCES

(b) SOFT TO MEDIUM CLAY ($N_o > 6$)

For clays base the selection on $N_o = \gamma H/c$

$\sigma_h = K_A \cdot \gamma \cdot H$

$K_A = 1 - m\frac{4c}{\gamma H}$;

m = 1 except where cut is underlain by deep soft normally consolidated clay, then $m = 0.4F_{SB}$

See Figure 28 for Factor of Safety against bottom instability, (F_{SB}): $1 \leq F_{SB} \leq 1.5$

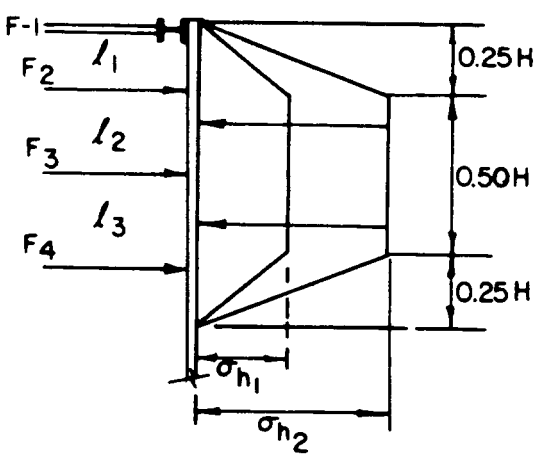

(c) STIFF CLAY ($N_o < 4$)

For $4 < N_o < 6$, use larger of diagrams (b) and (c).

$\sigma_{h1} = 0.2\gamma H$; $\sigma_{h2} = 0.4\gamma H$

Use lower value when movements are minimal and short construction period.

FIGURE 26

Pressure Distribution for Brace Loads in Internally Braced Flexible Walls

GRAIN SIZE DISTRIBUTION

Figure

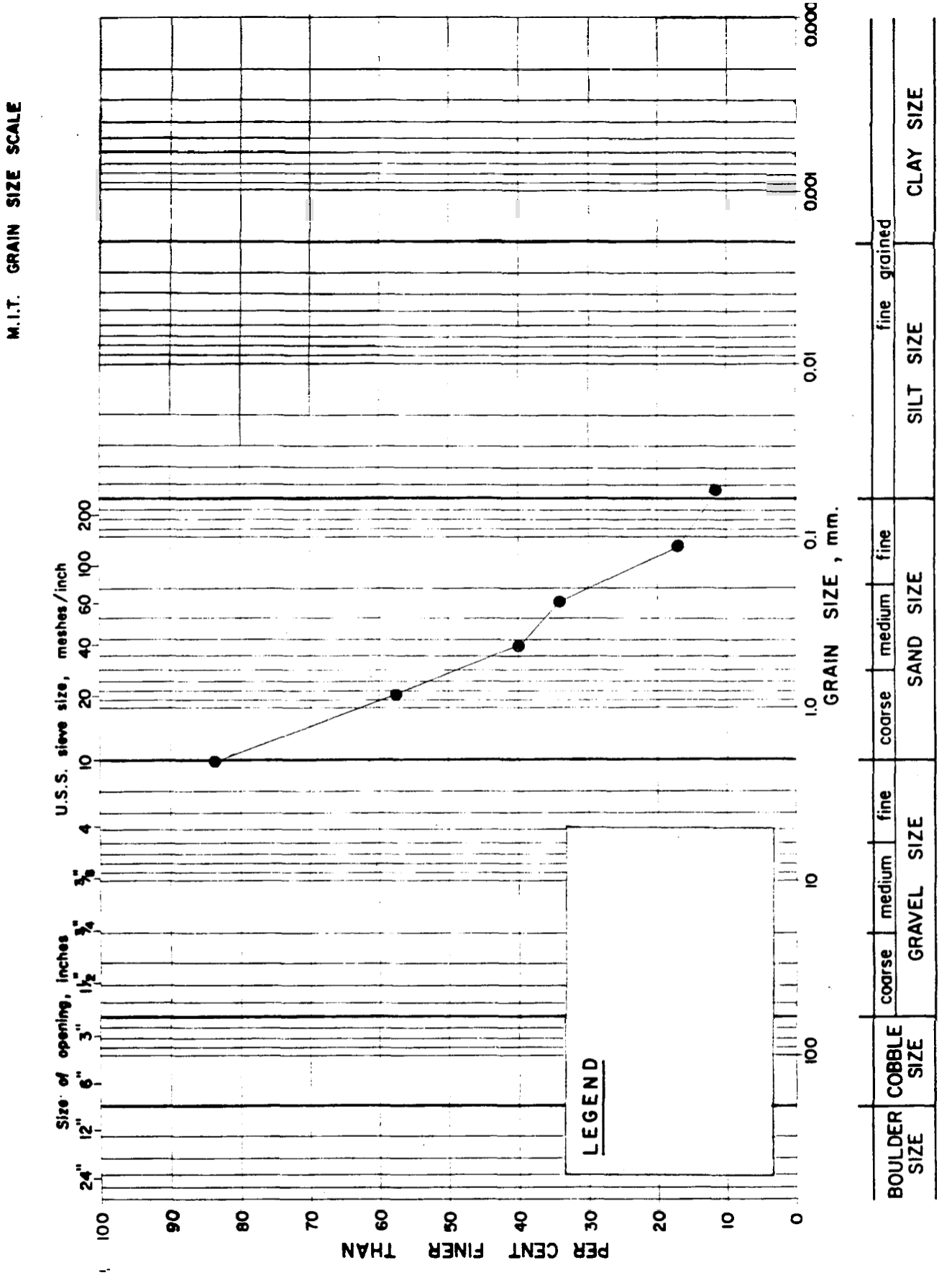

Project No. Drawn Reviewed Date

WESTON
MANAGERS DESIGNERS/CONSULTANTS

INEEL V-Tank Site Soils Data Summary:

1. Grain Size Distribution (ASTM D421-85)

Sieve Size			Sample Numbers →	1WG01401PR	1WG01402PR	1WG01501PR	1WG01601PR		
um	Mm	Std.	Depth of Samples →	10-12.5	10-12.5	15-17.5	17.5-20	Average	% Finer
74.9	0.07	<#200		10.7	11.5	10.1	19.4	12.93	
75.0	0.08	#200		4.6	4.1	2.9	4.4	4.00	12.91
106.0	0.11	#140		11.6	17.8	15.9	24.5	17.45	16.91
250.0	0.25	#60		6.3	7.5	8.9	12.4	8.78	34.36
425.0	0.43	#40		11.8	14.2	14.3	20.4	15.18	43.14
850.0	0.85	#20		22.9	27.2	28.8	17.6	24.13	58.32
2,000.0	2.00	#10		32.1	17.8	19	1.3	17.55	82.45
								100.00	
2. Dry Density (ASTM D5057-90), g/cm3									
				1.506	1.546	1.4	–	**1.53**	**95.5 pcf**
3. Percent Moisture (ASTM D2216-90), %									
				16.5	15.8	12.5	12.6	***16.15%**	

*Average % moisture does not include data from 15' – 17.5' depth in order to take a more conservative approach.

WAG-1

TSF-09/18

ISV Engineering Data

GEOTECH SOILS REPORTS

REC'D 3/27/01 from BEWI

LOCKHEED MARTIN

Lockheed Martin Idaho Technologies Company

INTERDEPARTMENTAL COMMUNICATION

Date:	September 16, 1998		
To:	John Giles	MS 3120	6-4158
From:	Edna C. Johnsen ecj	MS 3960	6-9705
Subject:	TRANSMITTAL OF RESULT TABLES FOR THE WAG-1 SAMPLING (V-TANKS) SAMPLING PROJECT – ECJ-04-98		

Enclosed please find the following Result Tables for the WAG-1 Sampling (V-Tanks) Project.

Inorganic

Result Table

WAG-1 Sampling (V-Tanks) – Inorganic Data (Method Validation Level C, table dated 9-15-98)

Non-Metals

Result Table

WAG-1 Sampling (V-Tanks) - Non-Metal Data (Method Validation Level C, table dated 9-16-98)

Particle Size Density

Result Table

WAG-1 Sampling (V-Tanks) – Particle Size Density (Method Validation Level C, table dated 9-17-98)

Per your request these tables were completed before all the data was received for this project. When the remainder of the data has been received, I will complete the other Result Tables and forward them to you.

Please review the enclosed table carefully. If you have any questions, or would like any changes, please do not hesitate to contact me at 526-9705 or Lotus Notes ECO.

Enclosure

cc: Carolyn S. Blackmore, MS 3953
Mary W. Hudson, MS 3960
Donna R. Kirchner (w/o Encl), MS 3960 DRK
WAG-1 Sampling (V-Tanks) Project File
Project File WAG1-03
Project File WAG1-04
Edna C. Johnsen File
File Code 6404

WAG-1 SAMPLING (V-TANKS) - NON-METALS DATA

AREA	TAN V-TANKS	TAN V-TANKS	TAN V-TANKS	TAN V-TANKS	TAN V-TANKS
LOCATION	D6	D6	D6	D6	D6
TYPE OF LOCATION	GRID	GRID	GRID	GRID	GRID
SAMPLE NUMBER	1WG014016T	1WG014016T	1WG01401PR	1WG01401PR	1WG014026T
MEDIA	SOIL	SOIL	SOIL	SOIL	SOIL
UNITS	%	ug/g	g/cm3	%	%
SDG NUMBER	1WG014016T	1WG014016T	1WG014016T	1WG014016T	1WG014016T
FIELD MEASUREMENT					
Depth (ft)	10-12.5	10-12.5	10-12.5	10-12.5	10-12.5
ANALYTES					
Carbon	1.3				1.0 U
Density			1.5		
Hydrogen, atomic	1.0 U				1.0 U
Nitrogen, atomic	1.0 U				1.0 U
Percent Moisture				16.5	
Total Inorganic Carbon		19300 M			
Total (Allowed) Hold Time[a]	35(28)d*				35(28)d
Total (Allowed) Hold Time[b]			27(28)d		
Total (Allowed) Hold Time[c]				22(28)d	
Total (Allowed) Hold Time[d]		34(28)d*			

a. Method deviation see RDR #LMES-ASO-002 (Carbon, Hydrogen-atomic, and Nitrogen-atomic)
b. ASTM D5057-90 (Density)
c. ASTM D2216-90 (Percent Moisture)
d. EPA Method 415.1/SW846 9060 (Total Inorganic Carbon)

9-16-98

WAG-1 SAMPLING (V-TANKS) - NON-METALS DATA (Continued)

AREA	TAN V-TANKS	TAN V-TANKS	TAN V-TANKS	TAN V-TANKS	TAN V-TANKS
LOCATION	D6	D6	D6	D6	D6
TYPE OF LOCATION	GRID	GRID	GRID	GRID	GRID
SAMPLE NUMBER	1WG014026T	1WG01402PR	1WG01402PR	1WG015016T	1WG015016T
MEDIA	SOIL	SOIL	SOIL	SOIL	SOIL
UNITS	ug/g	g/cm3	%	%	ug/g
SDG NUMBER	1WG014016T	1WG014016T	1WG014016T	1WG014016T	1WG014016T
FIELD MEASUREMENT					
Depth (ft)	10-12.5	10-12.5	10-12.5	15-17.5	15-17.5
ANALYTES					
Carbon				1.0 U	
Density		1.5			
Hydrogen, atomic				1.0 U	
Nitrogen, atomic				1.0 U	
Percent Moisture			15.8		
Total Inorganic Carbon	14000 M				17000 M
Total (Allowed) Hold Time [a]				34(28)d*	
Total (Allowed) Hold Time [b]		27(28)d			
Total (Allowed) Hold Time [c]			22(28)d		
Total (Allowed) Hold Time [d]	34(28)d*				34(28)d*

a. Method deviation see RDR #LMES-ASO-002 (Carbon, Hydrogen-atomic, and Nitrogen-atomic)
b. ASTM D5057-90 (Density)
c. ASTM D2216-90 (Percent Moisture)
d. EPA Method 415.1/SW846 9060 (Total Inorganic Carbon)

9-16-98

166740

WAG-1 SAMPLING (V-TANKS) - NON-METALS DATA (Continued)

AREA	TAN V-TANKS	TAN V-TANKS	TAN V-TANKS	TAN V-TANKS	TAN V-TANKS
LOCATION	D6	D6	D6	D6	D6
TYPE OF LOCATION	GRID	GRID	GRID	GRID	GRID
SAMPLE NUMBER	1WG01501PR	1WG01501PR	1WG016016T	1WG016016T	1WG01601PR
MEDIA	SOIL	SOIL	SOIL	SOIL	SOIL
UNITS	G/CM3	%	%	ug/g	G/CM3
SDG NUMBER	1WG014016T	1WG014016T	1WG014016T	1WG014016T	1WG014016T
FIELD MEASUREMENT					
Depth (ft)	15-17.5	15-17.5	17.5-20	17.5-20	17.5-20
ANALYTES					
Carbon			1.0 U		
Density	1.4				1.3
Hydrogen, atomic			1.0 U		
Nitrogen, atomic			1.0 U		
Percent Moisture		12.5			
Total Inorganic Carbon				17000 M	
Total (Allowed) Hold Time [a]			35(28)d*		
Total (Allowed) Hold Time [b]	27(28)d				27(28)d
Total (Allowed) Hold Time [c]		22(28)d			
Total (Allowed) Hold Time [d]				34(28)d*	

a. Method deviation see RDR #LMES-ASO-002 (Carbon, Hydrogen-atomic, and Nitrogen-atomic)
b. ASTM D5057-90 (Density)
c. ASTM D2216-90 (Percent Moisture)
d. EPA Method 415.1/SW846 9060 (Total Inorganic Carbon)

9-16-98

WAG-1 SAMPLING (V-TANKS) - NON-METALS DATA (Continued)

AREA	TAN V-TANKS
LOCATION	D6
TYPE OF LOCATION	GRID
SAMPLE NUMBER	1WG01601PR
MEDIA	SOIL
UNITS	%
SDG NUMBER	1WG014016T
FIELD MEASUREMENT	
Depth (ft)	17.5-20
ANALYTES	
Carbon	
Density	
Hydrogen, atomic	
Nitrogen, atomic	
Percent Moisture	12.6
Total Inorganic Carbon	
Total (Allowed) Hold Time[a]	
Total (Allowed) Hold Time[b]	
Total (Allowed) Hold Time[c]	22(28)d
Total (Allowed) Hold Time[d]	

a. Method deviation see RDR #LMES-ASO-002 (Carbon, Hydrogen-atomic, and Nitrogen-atomic)
b. ASTM D5057-90 (Density)
c. ASTM D2216-90 (Percent Moisture)
d. EPA Method 415.1/SW846 9060 (Total Inorganic Carbon)

9-16-98

WAG-1 SAMPLING (V-TANKS) - PARTICLE SIZE DENSITY

AREA	TAN V-TANKS	TAN V-TANKS	TAN V-TANKS	TAN V-TANKS
LOCATION	D6	D6	D6	D6
TYPE OF LOCATION	GRID	GRID	GRID	GRID
SAMPLE NUMBER	1WG01401PR	1WG01402PR	1WG01501PR	1WG01601PR
MEDIA	SOIL	SOIL	SOIL	SOIL
UNITS	wt. %	wt. %	wt. %	wt. %
SDG NUMBER	1WG014016T	1WG014016T	1WG014016T	1WG014016T
	1.5060 g/cm³ / 16.5%	1.5460 g/cm³ / 15.8%		
FIELD MEASUREMENT				
Depth (ft)	10-12.5	10-12.5	15-17.5	17.5-20
ANALYTES				
<75 Microns	10.7	11.5	10.1	19.4
106 Mircons	11.6	17.8	15.9	24.5
2000 Microns (#10)	32.1	17.8	19.0	1.3
250 Microns (#60)	6.3	7.5	8.9	12.4
425 Microns (#40)	11.8	14.2	14.3	20.4
75 Microns (#200)	4.6	4.1	2.9	4.4
850 Microns (#20)	22.9	27.2	28.8	17.6
Total (Allowed) Hold Time[a]	30(28)d*	30(28)d*	30(28)d*	30(28)d*

a. ASTM D421-85

9-17-98

ANALYTICAL SERVICES ORGANIZATION
SAMPLE RESULTS REPORT

Date Sampled:	6/30/98	MYPHM1	*Customer Sample ID:*	**1WG01402PR** 10-12'
Date Received:	7/7/98		*Lab Sample ID:*	A981900124
Matrix:	SOIL		*COC Number:*	10377

Analyte	*Cas No.*	*Result*	*Unit*	*Q*	*Method*	*Analysis Date*	*QC Batch*	*Lab Test*
< 75 Micrometers	N3123	11.46	wt %		ASO D421-85	07/30/1998 12:00		SIEVE
106 Micrometer sieve	N3145	17.75	wt %		ASO D421-85	07/30/1998 12:00		SIEVE
2000 Micrometer sieve	N3189	17.77	wt %		ASO D421-85	07/30/1998 12:00		SIEVE
250 Micrometer sieve	N3156	7.53	wt %		ASO D421-85	07/30/1998 12:00		SIEVE
425 Micrometer sieve	N3167	14.17	wt %		ASO D421-85	07/30/1998 12:00		SIEVE
75 Micrometer sieve	N3134	4.11	wt %		ASO D421-85	07/30/1998 12:00		SIEVE
850 Micrometer sieve	N3178	27.22	wt %		ASO D421-85	07/30/1998 12:00		SIEVE

8/5/98 3:22:18 PM

ANALYTICAL SERVICES ORGANIZATION
SAMPLE RESULTS REPORT

Date Sampled:	6/30/98	IAWETC	*Customer Sample ID:*	**1WG01402PR**
Date Received:	7/7/98		*Lab Sample ID:*	A981900124
Matrix:	SOIL		*COC Number:*	10377

Analyte	*Cas No.*	*Result*	*Unit*	*Q*	*Method*	*Analysis Date*	*QC Batch*	*Lab Test*
Density	N260	1.546	g/cm3		ASTM D5057-90	07/27/1998 10:30	QC98208032	DENSITY-I
Percent Moisture	N668	15.8	%		ASTM D2216-90	07/22/1998 12:45	QC98205006	PERCENT-MOIS

8/5/98 2:09:51 PM

ANALYTICAL SERVICES ORGANIZATION
SAMPLE RESULTS REPORT

Date Sampled:	6/30/98	MYPHM1	*Customer Sample ID:*	**1WG01401PR** 10-12.5'
Date Received:	7/7/98		*Lab Sample ID:*	A981900123
Matrix:	SOIL		*COC Number:*	10377

Analyte	*Cas No.*	*Result*	*Unit*	*Q*	*Method*	*Analysis Date*	*QC Batch*	*Lab Test*
< 75 Micrometers	N3123	10.73	wt %		ASO D421-85	07/30/1998 12:00		SIEVE
106 Micrometer sieve	N3145	11.56	wt %		ASO D421-85	07/30/1998 12:00		SIEVE
2000 Micrometer sieve	N3189	32.11	wt %		ASO D421-85	07/30/1998 12:00		SIEVE
250 Micrometer sieve	N3156	6.34	wt %		ASO D421-85	07/30/1998 12:00		SIEVE
425 Micrometer sieve	N3167	11.75	wt %		ASO D421-85	07/30/1998 12:00		SIEVE
75 Micrometer sieve	N3134	4.62	wt %		ASO D421-85	07/30/1998 12:00		SIEVE
850 Micrometer sieve	N3178	22.90	wt %		ASO D421-85	07/30/1998 12:00		SIEVE

8/5/98 3:22:18 PM

ANALYTICAL SERVICES ORGANIZATION
SAMPLE RESULTS REPORT

Date Sampled:	6/30/98	IAWETC	*Customer Sample ID:*	**1WG01401PR**
Date Received:	7/7/98		*Lab Sample ID:*	A981900123
Matrix:	SOIL		*COC Number:*	10377

Analyte	*Cas No.*	*Result*	*Unit*	*Q*	*Method*	*Analysis Date*	*QC Batch*	*Lab Test*
Density	N260	1.506	g/cm3		ASTM D5057-90	07/27/1998 10:30	QC98208032	DENSITY-I
Percent Moisture	N668	16.5	%		ASTM D2216-90	07/22/1998 12:45	QC98205006	PERCENT-MOIS

8/5/98 2:09:51 PM

TECHNICAL MEMORANDUM FOR THE WAG 3 AND WAG 10 SOILS TREATABILITY STUDY: PHYSICAL SEPARATION OF RADIONUCLIDES IN SOILS

1.0 INTRODUCTION

This technical memorandum summarizes the results of the first phase of investigation under the Waste Area Group (WAG 3) and WAG 10 Soils Treatability Study (TS). The objective of the first phase of the WAG 3 and WAG 10 TS is to demonstrate whether or not radionuclides can be mechanically separated from soils at the Idaho National Engineering Laboratory (INEL) and make recommendations for future work. If mechanical separation of radionuclides can be economically performed on soils from the INEL, then volume reduction of radioactively contaminated soil at the INEL may be a viable treatment option worthy of further consideration.

To facilitate environmental remediation efforts, the INEL is divided into 10 WAGs which are further subdivided into operable units (OUs). WAGs 1 through 9 generally correspond to INEL operational facilities (Figure 1-1), while WAG 10 corresponds to overall concerns associated with the Snake River Plain Aquifer (SRPA) in the bounds of the facility-specific WAGs. The boundary of WAG 10 is the INEL boundary, or beyond, as necessary to encompass real or potential impact from INEL activities (IDHW 1991).

Sampling was performed in areas of suspected radionuclide contamination in soils from sites inside and outside of existing OUs. Remedial Project Managers (RPMs) of the U.S. Department of Energy (DOE), Idaho Operations Office (DOE-ID), U.S. Environmental Protection Agency (EPA), Region X, and the Idaho Department of Health and Welfare (IDHW) reviewed available information regarding radionuclide contaminated soils (RCS) at the INEL that are outside existing OUs and determined sites where unacceptable risks to human health or the environment may exist. Inside OUs, areas which may have elevated radionuclide contamination in soils and could potentially pose a higher risk were selected for sampling. Surface soils between ranging in depth from 0 to 0.3 m (0 and 1 ft) below land surface (bls) were sampled from the selected locations. Physical separation of particle size fractions was achieved by wet sieving the samples. The individual particle size fractions were analyzed for radionuclide indicators and specific radionuclides. Sample aliquots were subjected to mechanical attrition and the effect of attrition on radionuclide distribution in the individual particle size fractions was evaluated.

Sample Log Number: 090313
TAN TSF-09
Particle Size Distribution

Radionuclide Distribution (pCi/g)

Sieve	Gross	Tare	Net	Wt %	Alpha	Beta	Cs-137	Avg Cs
+ 4	558.70	103.64	455.06	30.4	219.4	6711.7	8189.2	8189.2
+ 10	104.61	24.76	79.85	5.3	410.8	13063.1	13729.7	9016.3
+ 40	272.11	195.60	76.51	5.1	725.2	25315.3	28918.9	11506.8
+100	372.23	191.48	180.75	12.1	1684.7	56756.8	61081.1	22818.2
+200	354.84	194.90	159.94	10.7	2319.8	80630.6	70270.3	30789.4
+400	293.00	193.62	99.38	6.6	3238.7	111261.3	88918.9	36283.4
Fines	518.07	72.45	445.62	29.8	12342.3	416216.2	462162.2	163047.7
Total	2473.56	976.45	1497.11	100.0	4465.6	150770.8	163047.7	

Sample Log Number: 090313 after attrition
TAN TSF-09
Particle Size Distribution

Radionuclide Distribution (pCi/g)

Sieve	Gross	Tare	Net	Wt %	Alpha	Beta	Cs-137	Avg Cs
+ 4	404.79	104.30	300.49	25.4	123.0	3828.8	2864.9	2864.9
+ 10	89.16	24.30	64.86	5.5	165.8	5225.2	10162.2	4160.3
+ 40	89.67	20.79	68.88	5.8	815.3	25540.5	18864.9	6492.9
+100	334.79	192.97	141.82	12.0	1220.7	38198.2	44324.3	15806.7
+200	327.23	193.30	133.93	11.3	2121.6	68018.0	71081.1	26233.6
+400	112.17	20.53	91.64	7.7	3085.6	103603.6	120000.0	36952.9
Fines	454.41	72.15	382.26	32.3	12342.3	388738.7	464864.9	175120.3
Total	1812.22	628.34	1183.88	100.0	4698.0	148553.1	175120.3	

Average Cs = Calculated weighted average concentration of cesium for composite soil fraction greater than or equal to sieve size shown. For example, activity shown on +40 mesh line is the average activity for all materials above 40 mesh.

SIEVE DATA

7-31-98

Curtis L. Houston

REQ. NO.	A982020125		
MATERIAL	SOIL		
SAMP WT	GROSS	TARE	
	250.65	200.66	
SCREEN	FULL	EMPTY	% WT
2000	170.5100	169.1600	2.70
850	180.3800	169.1600	23.64
425	179.6300	169.1600	20.94
250	175.2700	169.1600	12.22
106	182.1000	169.1600	25.89
75	171.4900	169.1600	4.66

PERCENT WEIGHT FINES 9.941994

7-31-98

CLH

SCREEN ANALYSIS

TEST NO.	A981900123		
MATERIAL	SOIL		
SAMP WT	GROSS	TARE	
	208.87	120.7	
SCREEN	FULL	EMPTY	% WT
2000	197.4700	169.1600	32.11
850	189.3500	169.1600	22.90
425	179.5200	169.1600	11.75
250	174.7500	169.1600	6.34
106	179.3500	169.1600	11.56
75	173.2300	169.1600	4.62

PERCENT WEIGHT FINES 10.72929

REQ. NO. A981900124
MATERIAL SOIL

SAMP WT	GROSS	TARE
	201.4	118.88

SCREEN	FULL	EMPTY	% WT
2000	183.8200	169.1600	17.77
850	191.6200	169.1600	27.22
425	180.8500	169.1600	14.17
250	175.3700	169.1600	7.53
106	183.8100	169.1600	17.75
75	172.5500	169.1600	4.11

PERCENT WEIGHT FINES 11.46391

7-31-98
CCH

SIEVE DATA

7-31-98

Curtis L. Houston

REQ. NO.	A982020125		
MATERIAL	SOIL		
SAMP WT	GROSS	TARE	
	250.65	200.66	
SCREEN	FULL	EMPTY	% WT
2000	170.5100	169.1600	2.70
850	180.3800	169.1600	23.64
425	179.6300	169.1600	20.94
250	175.2700	169.1600	12.22
106	182.1000	169.1600	25.89
75	171.4900	169.1600	4.66

PERCENT WEIGHT FINES 9.941994

7-31-98

CLH

SCREEN ANALYSIS

SEQ. NO.	A981900123		
MATERIAL	SOIL		
SAMP WT	GROSS	TARE	
	208.87	120.7	
SCREEN	FULL	EMPTY	% WT
2000	197.4700	169.1600	32.11
850	189.3500	169.1600	22.90
425	179.5200	169.1600	11.75
250	174.7500	169.1600	6.34
106	179.3500	169.1600	11.56
75	173.2300	169.1600	4.62

PERCENT WEIGHT FINES 10.72929

REQ. NO. A981900124
MATERIAL SOIL

SAMP WT	GROSS	TARE
	201.4	118.88

SCREEN	FULL	EMPTY	% WT
2000	183.8200	169.1600	17.77
850	191.6200	169.1600	27.22
425	180.8500	169.1600	14.17
250	175.3700	169.1600	7.53
106	183.8100	169.1600	17.75
75	172.5500	169.1600	4.11

PERCENT WEIGHT FINES 11.46391

7-31-98
CCH

SCREEN ANALYSIS
REG. NO. A931900129
MATERIAL SOIL
SAMP WT GROSS TARE

196.83 118.88

SCREEN	FULL	EMPTY	% WT
2000	183.9600	169.1600	18.99
350	191.6300	169.1600	28.83
425	180.3200	169.1600	14.32
250	176.1300	169.1600	8.94
106	181.5800	169.1600	15.93
75	171.4200	169.1600	2.90

PERCENT WEIGHT FINES 10.09623

7-31-98

CLH

7-31-98
CCH

REQ. NO. A981900132
MATERIAL SOIL

SAMP WT	GROSS	TARE
	193.81	118.92

SCREEN	FULL	EMPTY	% WT
2000	170.1000	169.1600	1.26
850	182.3000	169.1600	17.55
425	184.4700	169.1600	20.44
250	178.4800	169.1600	12.44
106	187.5200	169.1600	24.52
75	172.4400	169.1600	4.38

PERCENT WEIGHT FINES 19.41515

Trench Shields

Speed Shore offers the most advanced line of trench shielding products available. Built to last, these shields are designed and certified by Registered Professional Engineers to optimize strength-to-weight ratios while maintaining minimal sidewall thickness.

Standard shields are available with 3" to 8" thick walls in a full array of heights and lengths. The comprehensive line of trench shields includes economical Single-Wall Shields for less extreme lateral pressures, specially designed Manhole Shields, and the popular heavy-duty Double-Wall Shields. Complete custom capabilities are also available to analyze and optimize shields to your specific needs.

Unique Speed Shore features include: replaceable push blocks to protect the integrity of the structure, high-tensile steel reinforcement plates for added strength in critical spreader socket areas, and a variety of industry options that are included as Speed Shore *standard features*. Such features make Speed Shore trench shields the *preferred choice* for maximum productivity and safety in the trenches.

Speed Shore Shields Optimize Safety and Productivity.

- **Replaceable Push Blocks**
  protect your structure when pushing the shield to grade. Damaged sections are readily replaced with *no modification to shield structure.*
- **1/2" Steel Reinforcement Plates**
  for added strength and puncture resistance in critical spreader socket areas.
- **5 Spreader Sockets**
  (standard on most Double-Wall Shields) for optimum versatility in spreader placement.
- **Heavy-Duty Stacking Sockets**
  assure proper alignment of stacked shields.
- **Thru-Wall Spreader Sockets**
  penetrate end vertical supports for added strength and durability.
- **Easy-Access Lifting Pockets**
  for ease of handling.
- **Certification Plate**
  for quick reference to shield size, serial number and P.E.–Certified capacity.

SPEED SHORE®

PIONEERING TRENCH SAFETY

Trench Shield Features

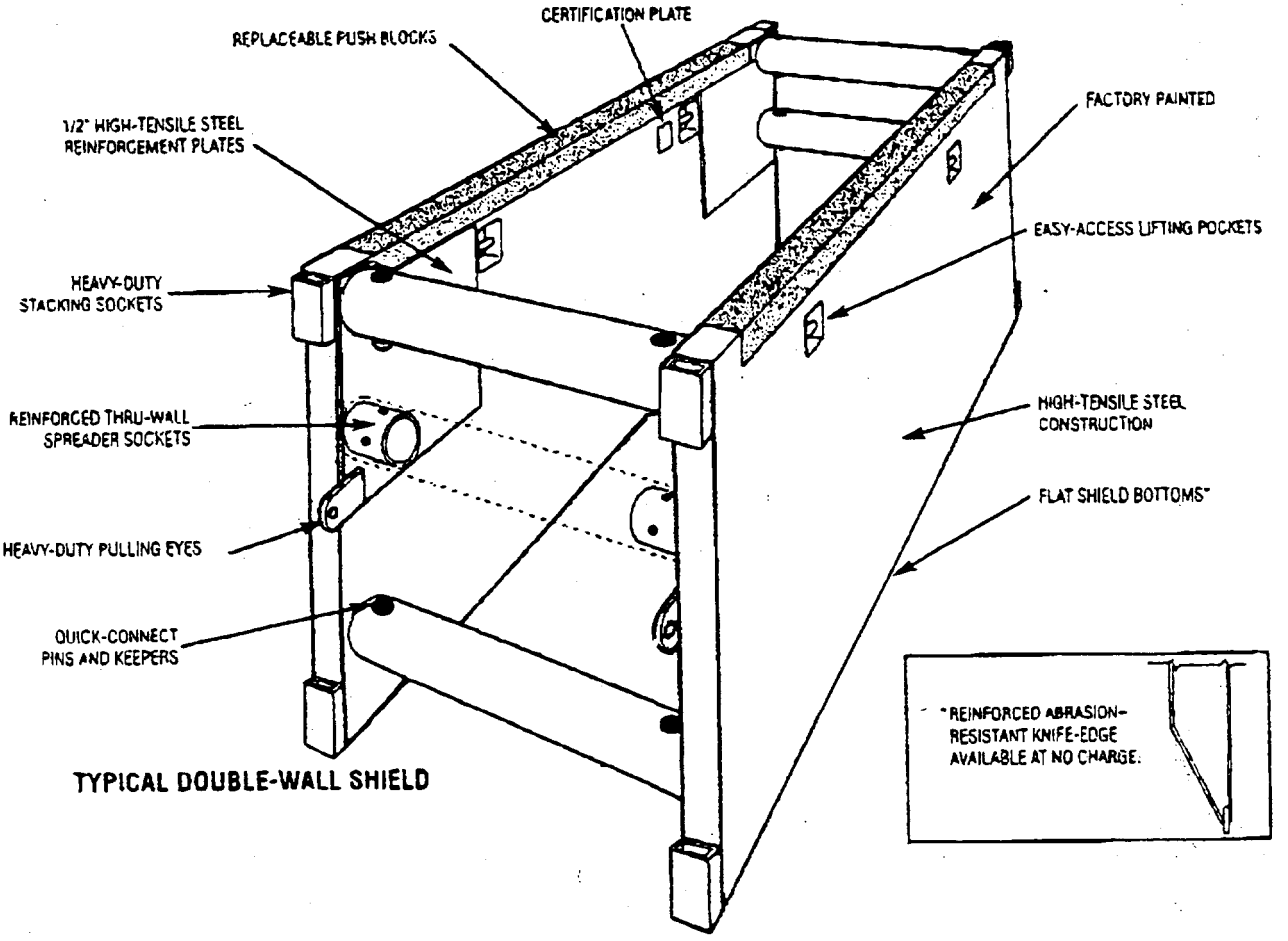

TYPICAL DOUBLE-WALL SHIELD

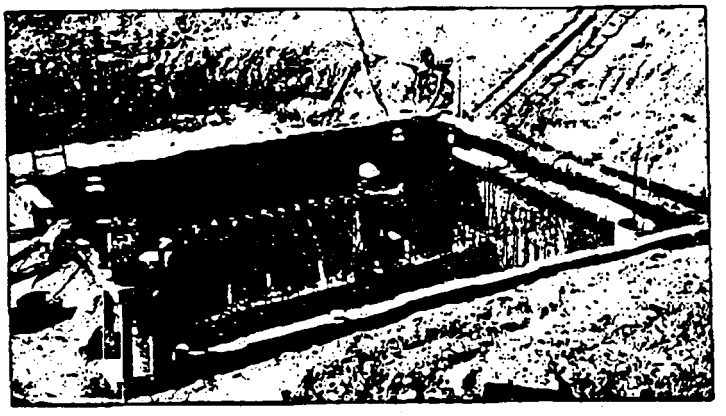

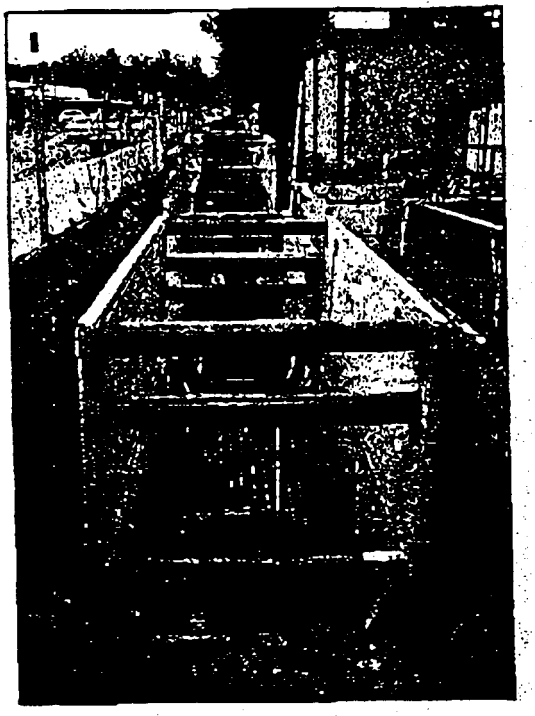

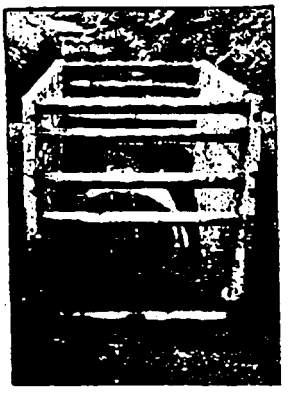

ALL SYSTEMS CERTIFIED TO MEET OSHA REGULATIONS
P.E.
CERTIFIED

Double-Wall Trench Shields

4" Double-Wall

MODEL	DIMENSIONS H (Ft.)	L	PIPE CLEARANCE (In.)	WEIGHT (Lbs.)	SHIELD CAPACITY (Psf)	ALLOWABLE DEPTH (Ft.) by soil type ** A	B	C(60)	C
TS-0408-DW4	4	8	20	2430	5540	50	50	50	50
TS-0410-DW4	4	10	20	2780	3390	50	50	50	43
TS-0412-DW4	4	12	20	3150	2280	50	50	38	29
TS-0416-DW4	4	16	20	3790	1230	47	27	21	16
TS-0420-DW4	4	20	20	4420	770	29	17	13	10
TS-0608-DW4	6	8	42	3300	4330	50	50	50	50
TS-0610-DW4	6	10	42	3840	3420	50	50	50	45
TS-0612-DW4	6	12	42	4320	2310	50	50	40	31
TS-0616-DW4	6	16	42	5785	1250	48	29	22	17
TS-0620-DW4	6	20	42	7435	880	34	20	16	13
TS-0808-DW4	8	8	62	4220	2100	50	48	37	29
TS-0810-DW4	8	10	62	4435	1680	50	39	30	24
TS-0812-DW4	8	12	62	5200	1400	50	33	26	21
TS-0816-DW4	8	16	62	7360	1250	50	30	24	19
TS-0820-DW4	8	20	62	9550	900	36	22	18	14

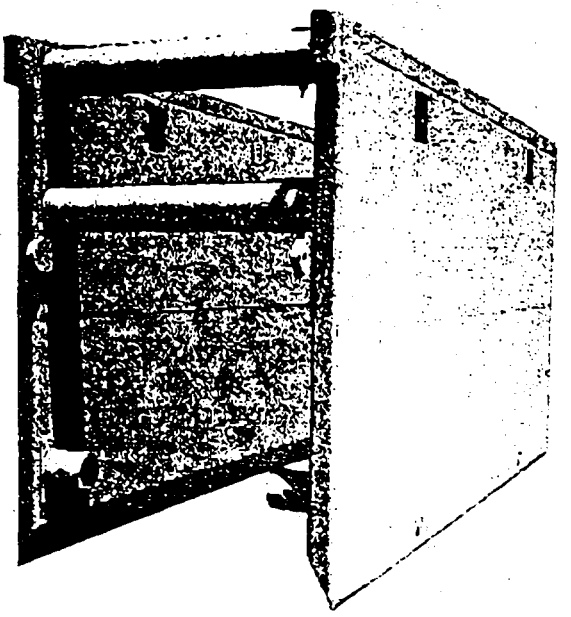

6" Double-Wall

MODEL	DIMENSIONS H (Ft.)	L	PIPE CLEARANCE (In.)	WEIGHT (Lbs.)	SHIELD CAPACITY (Psf)	ALLOWABLE DEPTH (Ft.) by soil type ** A	B	C(60)	C
TS-0412-DW6	4	12	20	3720	3680	50	50	50	47
TS-0416-DW6	4	16	20	4590	1990	50	44	34	26
TS-0420-DW6	4	20	20	5240	1250	48	23	22	17
TS-0424-DW6	4	24	20	6300	850	32	19	15	12
TS-0428-DW6	4	24	20	7230	620	23	14	11	9
TS-0612-DW6	6	12	42	5465	3690	50	50	50	46
TS-0616-DW6	6	16	42	6610	2000	50	50	35	27
TS-0620-DW6	6	20	42	8370	1250	49	29	23	18
TS-0624-DW6	6	24	42	9540	950	37	22	18	14
TS-0628-DW6	6	28	42	11540	740	29	17	15	11
TS-0812-DW6	8	12	65	6880	2030	50	47	36	28
TS-0816-DW6	8	16	65	8525	2000	50	46	36	28
TS-0820-DW6	8	20	65	9980	1250	50	30	24	19
TS-0824-DW6	8	24	65	12400	960	38	24	19	15
TS-0828-DW6	8	28	65	15650	790	32	20	16	13
TS-1012-DW6	10	12	88	8410	1600	50	38	30	24
TS-1016-DW6	10	16	86	10560	1200	49	31	24	19
TS-1020-DW6	10	20	86	13540	860	40	25	20	16
TS-1024-DW6	10	24	86	15035	860	35	22	18	15
TS-1028-DW6	10	28	86	19880	770	32	20	16	13

8" Double-Wall

MODEL	DIMENSIONS H (Ft.)	L	PIPE CLEARANCE (In.)	WEIGHT (Lbs.)	SHIELD CAPACITY (Psf)	ALLOWABLE DEPTH (Ft.) by soil type ** A	B	C(60)	C
TS-0420-DW8	4	20	20	6450	1800	50	40	30	24
TS-0424-DW8	4	24	20	7460	1230	47	27	21	17
TS-0428-DW8	4	28	20	8600	900	34	20	16	12
TS-0432-DW8	4	32	20	9460	880	26	15	12	10
TS-0620-DW8	6	20	42	9380	1790	50	41	31	24
TS-0624-DW8	6	24	42	10750	1220	48	28	22	17
TS-0628-DW8	6	28	42	13395	1080	48	28	22	17
TS-0632-DW8	6	32	42	14760	860	38	22	18	15
TS-0820-DW8	8	20	65	11950	1780	50	41	32	25
TS-0824-DW8	8	24	65	13260	1220	49	29	24	19
TS-0828-DW8	8	28	65	16870	1270	50	30	24	19
TS-0832-DW8	8	32	65	21890	980	39	24	19	15
TS-1020-DW8	10	20	86	14420	1320	50	33	26	21
TS-1024-DW8	10	24	86	16390	1100	47	28	22	18
TS-1028-DW8	10	28	86	18700	920	37	23	19	16
TS-1032-DW8	10	32	86	24420	870	36	22	18	15

Spreader Sets*

MODEL	DESCRIPTION	WEIGHT (Lbs.)
SPR8-024	24" (2') Spreaders	350
SPR8-030	30" (2.5') Spreaders	430
SPR8-036	36" (3') Spreaders	520
SPR8-042	42" (3.5') Spreaders	610
SPR8-048	48" (4') Spreaders	695
SPR8-054	54" (4.5') Spreaders	780
SPR8-060	60" (5') Spreaders	870
SPR8-072	72" (6') Spreaders	1040
SPR8-084	84" (7') Spreaders	1215
SPR8-096	96" (8') Spreaders	1390
SPR8-108	108" (9') Spreaders	1580
SPR8-120	120" (10') Spreaders	1736
SPR8-132	132" (11') Spreaders	1910
SPR8-144	144" (12') Spreaders	2085
SPR8-156	156" (13') Spreaders	2255
SPR8-168	168" (14') Spreaders	2430
SPR8-180	180" (15') Spreaders	2600

* Includes 4 spreaders per set.

Psf = Pounds per square foot.

** Prior to use, refer to OSHA's 29 CFR, Part 1926 (subpart P) and Manufacturer's Tabulated Data for detailed explanation of soil types and product application. Type A soil not to exceed 25 Psf per foot of depth; Type B soil not to exceed 45 Psf per foot of depth; Type C(60) soil not to exceed 60 Psf per foot of depth; Type C soil not to exceed 80 Psf per foot of depth.

Note: Allowable depths are limited to 50 feet for practical purposes. Contact Speed Shore for applications exceeding posted allowable depths.

Single-Wall Trench Shields

3" Economy Single-Wall

MODEL	DIMENSIONS H (Ft.)	L	PIPE CLEARANCE (In.)	WEIGHT (Lbs.)	SHIELD CAPACITY (Psf.)	ALLOWABLE DEPTH (Ft.) by soil type ** A	B	C(60)	C
TS-0406-SW3	4	6	22	935	1700	50	38	29	22
TS-0408-SW3	4	8	22	1150	910	35	20	16	18
TS-0410-SW3	4	10	22	1395	570	21	13	10	8
TS-0412-SW3	4	12	22	1760	510	19	12	9	8
TS-0606-SW3	6	6	34	1305	1200	47	28	22	17
TS-0608-SW3	6	8	34	1655	820	32	19	15	12
TS-0610-SW3	6	10	34	1965	510	20	13	10	9
TS-0612-SW3	6	12	34	2415	430	17	11	8	8
TS-0806-SW3	8	6	46	1665	750	30	19	15	13
TS-0808-SW3	8	8	46	2055	580	23	15	12	10
TS-0810-SW3	8	10	46	2520	450	18	12	10	9
TS-0812-SW3	8	12	46	3060	380	16	11	9	8

3" Single-Wall Shields are of tubular construction. Heavy-Duty Stacking Sockets and Pulling Eyes are optional.

Psf = Pounds per square foot.

** Prior to use, refer to OSHA's 29 CFR, Part 1926 (subpart P) and Manufacturer's Tabulated Data for detailed explanation of soil types and product application. Type A soil not exceed 25 Psf per foot of depth; Type B soil not to exceed 45 Psf per foot of depth; Type C(60) soil not to exceed 60 Psf per foot of depth; Type C soil not to exceed 80 Psf per foot of depth.

Note: Allowable depths are limited to 50 feet for practical purposes. Contact Speed Shore for applications exceeding posted allowable depths.

Spreader Sets*

MODEL NO.	DESCRIPTION	WEIGHT (Lbs.)
SPR4-024	24" (2') Spreaders	90
SPR4-030	30" (2.5') Spreaders	110
SPR4-036	36" (3') Spreaders	130
SPR4-042	42" (3.5') Spreaders	150
SPR4-048	48" (4') Spreaders	175
SPR4-054	54" (4.5') Spreaders	195
SPR4-060	60" (5') Spreaders	215
SPR4-072	72" (6') Spreaders	260
SPR4-084	84" (7') Spreaders	300
SPR4-096	96" (8') Spreaders	345

*Includes 4 spreaders per set.

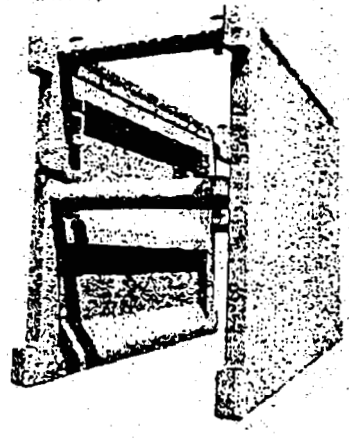

4" Heavy-Duty Single-Wall

MODEL	DIMENSIONS H (Ft.)	L	PIPE CLEARANCE (In.)	WEIGHT (Lbs.)	SHIELD CAPACITY (Psf.)	ALLOWABLE DEPTH (Ft.) by soil type ** A	B	C(60)	C
TS-0408-SW4H	4	6	22	995	2840	50	50	48	37
TS-0408-SW4H	4	8	22	1230	1525	50	34	26	20
TS-0410-SW4H	4	10	22	1510	950	37	21	17	13
TS-0412-SW4H	4	12	22	1840	650	24	15	12	9
TS-0414-SW4H	4	14	22	2220	675	25	15	12	10
TS-0416-SW4H	4	16	22	2760	650	24	15	12	9
TS-0606-SW4H	6	6	36	1545	2080	50	48	37	28
TS-0608-SW4H	6	8	36	1875	1525	50	35	27	21
TS-0610-SW4H	6	10	36	2280	950	36	22	18	14
TS-0612-SW4H	6	12	36	2740	650	25	16	13	10
TS-0614-SW4H	6	14	36	3195	600	24	15	12	10
TS-0616-SW4H	6	16	36	3585	460	18	11	9	8
TS-0806-SW4H	8	6	46	1980	1300	50	31	26	19
TS-0808-SW4H	8	8	46	2410	980	40	24	19	15
TS-0810-SW4H	8	10	46	2940	780	32	20	16	13
TS-0812-SW4H	8	12	46	3450	650	26	17	14	11
TS-0814-SW4H	8	14	46	4055	560	23	15	12	10
TS-0816-SW4H	8	16	46	4645	430	18	12	10	9

4" Single-Wall Shields are constructed with Speed Shore's exclusive slope-laced structural design, and include Stacking Sockets and Pulling Eyes.

Psf = Pounds per square foot.

** Prior to use, refer to OSHA's 29 CFR, Part 1926 (subpart P) and Manufacturer's Tabulated Data for detailed explanation of soil types and product application. Type A soil not exceed 25 Psf per foot of depth; Type B soil not to exceed 45 Psf per foot of depth; Type C(60) soil not to exceed 60 Psf per foot of depth; Type C soil not to exceed 80 Psf per foot of depth.

Note: Allowable depths are limited to 50 feet for practical purposes. Contact Speed Shore for applications exceeding posted allowable depths.

Spreader Sets*

MODEL	DESCRIPTION	WEIGHT (Lbs.)
SPR5-024	30" (2') Spreaders	185
SPR5-036	36" (3') Spreaders	250
SPR5-048	48" (4') Spreaders	330
SPR5-060	60" (5') Spreaders	415
SPR5-072	72" (6') Spreaders	500
SPR5-084	84" (7') Spreaders	580
SPR5-096	96" (8') Spreaders	665
SPR5-102	102" (9') Spreaders	750
SPR5-120	120" (10') Spreaders	830
SPR5-132	132" (11') Spreaders	915
SPR5-144	144" (12') Spreaders	995
SPR5-156	156" (13') Spreaders	1081
SPR5-168	168" (14') Spreaders	1164
SPR5-180	180" (15') Spreaders	1247

*Includes 4 spreaders per set

NES TRENCH SHORING
3855 South 700 West
Salt Lake City, UT 84119
(801) 270-5821 • Fax: 270-8175

Arch Spreaders

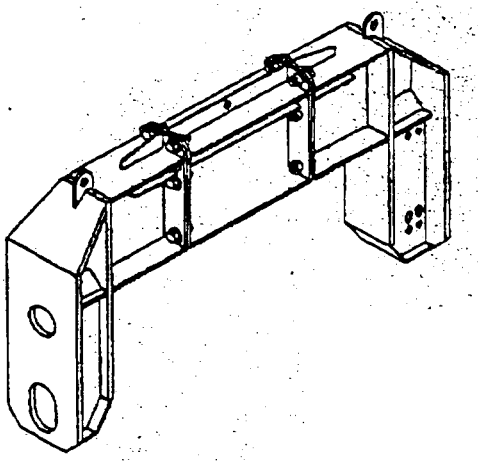

Designed for bore-pits and large-diameter pipe clearance, Speed Shore's Arch Spreaders are quick and easy to install. Available with a full range of bolt-on extensions, they simply pin in place on the standard double-wall shields to provide for exceptionally high clearances.

MODEL	DESCRIPTION	WEIGHT (Lbs.)
TS-ARCH	Basic Arch Spreader	2290
TS-ARCH-EXT01	1' Extension	150
TS-ARCH-EXT02	2' Extension	255
TS-ARCH-EXT03	3' Extension	360
TS-ARCH-EXT04	4' Extension	465
TS-ARCH-EXT05	5' Extension	565
TS-ARCH-EXT06	6' Extension	670
TS-ARCH-EXT07	7' Extension	775
TS-ARCH-EXT08	8' Extension	880
TS-ARCH-EXT09	9' Extension	985
TS-ARCH-EXT10	10' Extension	1085

The standard Arch Spreader is designed for use with 6', 8', and 10' high Speed Shore Shields.

The basic Arch Spreader will produce a 6' span between the inside walls of the shield. Extensions are available in 1' increments.

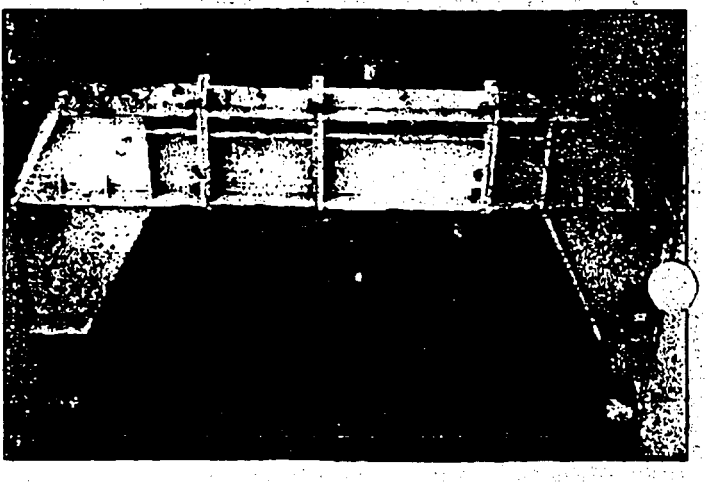

Pioneer of the World's Most Advanced Trench Safety Systems

Shoring Shields® | Vertical Shores | Waler Systems | Excavation Braces | Modular Alum. Panel Systems | Aluminum Trench Shields | Steel Trench Shields | Manhole Shields | Manguard® Shields | Slide-Rail Systems | Mega-Shore® Systems | Bedding Boxes

SPEED SHORE®
PIONEERING TRENCH SAFETY
3330 S. SAM HOUSTON PKWY E. • HOUSTON, TEXAS 77047
(713) 946-0750 • FAX (713) 943-8483 • USA TOLL FREE: 1-800-231-6662
www.speedshore.com

Authorized Distributor

NES TRENCH SHORING
3655 South 700 West
Salt Lake City, UT 84119
(801) 270-5821 • Fax: 270-8175

Copyright USA Speed Shore

ABQ06

CALCULATION COVER SHEET

Project:	**INEEL V-Tank Remediation Project**				**Number of Sheets:** 1 of 5
Site:	INEEL Test Area North, Idaho Falls, Idaho				
Calculation Number:	ABQ06 – CE002		**Work Order Number:**	12393.002.001	
Subject:	**Excavation – Estimated Excavated Soil Volume/Storage Requirements**				
Rev #:	**Date:**	**Revision:**	**Calculated by:**	**Checked by:**	**Approved:**
RAA		60%	Rob Ederer		
RAB	5/31/01	90%	Rob Ederer	Berg Keshian	Berg Keshian
RAC	6/27/01	90% Polish	Berg Keshian	D. Brennecke	B. Keshian
RAD	9/27/01	Draft Final	Berg Keshian	D. Brennecke	9/27/01

WESTON
MANAGERS DESIGNERS CONSULTANTS

SHEET ____ of ____

CLIENT/SUBJECT _____ W.O. NO. _____

TASK DESCRIPTION _____ TASK NO. _____

PREPARED BY B. KESHIAN DEPT _____ DATE 5/31/01

MATH CHECK BY _____ DEPT _____ DATE _____

METHOD REV. BY _____ DEPT _____ DATE _____

APPROVED BY _____ DEPT _____ DATE _____

Problem Statement:

Estimate the volume of excavated soil, soil container capacity, and quantity of containers.

Method of Solution:

1. Estimate the weight of soil and compare to weight capacity of the bags.
2. Estimate the volume of soil to be excavated.
3. Estimate the number of bags required.

Assumptions:

Average dry soil density if 95.5 pcf.
Average total density is 111 pcf. @ 16.2% moisture content
Soil bag capacity is 258 ~~pcf.~~ cubic ft.

Sources of Formulas and References:

INEEL ~~BBWI~~ Engineering Data – Soils test results (see Calculation ABQ05 – CE001)
LiftBag Product Literature
Design Drawings

Calculation:

1. Estimate volume of Soil for TANK Excavation

Depth: 15' Area: 48 x 26' = 1248 SF

Vol = 1248 x 15/27 = 693 CY

Exclude volume of TANKS to Spring Line

$$\frac{\frac{\pi D^3}{4} \times L}{27} \times \frac{3}{2} = \frac{\frac{3.14 \times 10^2}{4} \times 19.5}{27} \times \frac{3}{2} = 85 \text{ CY}$$

Volume of Soil = 693 − 85 = **608 CY** ←

WESTON
MANAGERS DESIGNERS CONSULTANTS

SHEET ____ of ____

CLIENT/SUBJECT _____ W.O. NO. _____

TASK DESCRIPTION _____ TASK NO. _____

PREPARED BY _____ DEPT _____ DATE _____

MATH CHECK BY _____ DEPT _____ DATE _____

METHOD REV. BY _____ DEPT _____ DATE _____

APPROVED BY _____

DEPT _____ DATE _____

2. Determine Volume of Soil for UG & Valve Box excavation

Assume depth of 12' depth

Vol = 18' wide x 12' Long by 12' deep / 27

= 96 cy

Exclude UG TANK and valve box

UG tank is 400 gal

400 gal / 7.45 gal/cf = 53.69 CF = 2 cy

Valve box

6' x 6.5' x 8' / 27 = 11.5 cy

Vol Soil = 96 - 2 - 11.5 = **82.5 cy** ←

3. Determine Volume of Soil from Pipe Removal

Assume lines 7' deep and Trenching 3' wide

Assume ~~100~~ 200 of lines

~~100~~ 200 x 7' x 3' / 27 = ~~47.8~~ 156 cy ←

Neglect Volume of Pipe

WESTON
MANAGERS DESIGNERS/CONSULTANTS

SHEET ____ of ____

CLIENT/SUBJECT _____ W.O. NO. _____

TASK DESCRIPTION _____ TASK NO. _____

PREPARED BY _____ DEPT _____ DATE _____

MATH CHECK BY _____ DEPT _____ DATE _____

METHOD REV. BY _____ DEPT _____ DATE _____

APPROVED BY _____

DEPT _____ DATE _____

4) TOTAL Volume of Soil to be handled

608 + 82.5 + ~~77.8~~ 156 = ~~768~~ 847 cy

Assume 20% Expansion

~~768~~ 847 × 1.2 = ~~922~~ 1016 cy

5) Estimate number of bags

Each bag has volume of 258 cf and 2400 lb limit

Based on unit weight of Soil = 111 pcf

Capacity of bag = Vol bag / bag Vol = 2400 lbs/111 / 258 = 216.2 cf = 84%

216 cf/27 = 8 cy/bag

~~922~~ 1016 cy/8 = ~~115~~ 127 bags of Soil

6. Estimate No of bags for piling

WESTON
MANAGERS DESIGNERS/CONSULTANTS

CLIENT/SUBJECT _____ W.O. NO. _____

TASK DESCRIPTION _____ TASK NO. _____

PREPARED BY _____ DEPT _____ DATE _____

MATH CHECK BY _____ DEPT _____ DATE _____

METHOD REV. BY _____ DEPT _____ DATE _____

APPROVED BY _____ DEPT _____ DATE _____

Assume Volume of pipe is 80 cf and that pipe takes up 10 times the space of its Volume

10 x 80 = 800 cf / 27 = 29.63 cy

Assume each bag can only be filled to 4.5 cy

∴ 29.63/4.5 = 6.6 bags — Assume 7 bags of pipe

Total Bags = ~~122~~ bags 134 pr

7. Determine Storage Area for Bags

Assume Stack 2 high

Area of EACH bag = 52.4 SF

134 ~~122~~ bags / 2 x 52.4/bag = ~~3196 SF~~ 3511 pr

Size Area or Rectangle

~~40~~ 45' x 80' = ~~3200~~ 3600 SF pr

* SPACE AVAILABLE 5300 SF which Allows for bag expansion pr

Discussion

Total Soil Volume ~~922~~ 1016 cy

Total Bags 134 ~~122~~ Bags

Soil Container Capacity 8 cy/bag ⇒ ~~85~~ 84% capacity

Storage Area Required 40 x 80' = ~~3200~~ SF 3600 SF pr

WESTON MANAGERS DESIGNERS/CONSULTANTS

SHEET ____ of ____

CLIENT/SUBJECT U TANKS W.O. NO. ____

TASK DESCRIPTION ____ TASK NO. ____

PREPARED BY B. KESHIAN DEPT ____ DATE 9/27/01

MATH CHECK BY ____ DEPT ____ DATE ____

METHOD REV. BY ____ DEPT ____ DATE ____

APPROVED BY ____ DEPT ____ DATE ____

* There is the potential that gravel road base within the AOC and laydown areas could become contaminated and require bagging for disposal

Drum Storage

$1' \times 3000\ SF \times 1/27 = 111\ cy$

HIC Storage

$\frac{1'}{27} \times (53 \times 53) + \left(\frac{53+15}{2} \times 45\right) = 161\ cy$

Offsite Access Rd

$1/2 \times 12 \times 113 \times 1/27 = 25\ cy$

$+ 1/2 \times 20 \times 255 \times 1/27 = 94\ cy$

Other Gravel Areas

$[1/2 \times 15 \times 70] + (1/2 \times 23 \times 105) + (1/2 \times 23 \times 45) \times 1/27 = 83\ cy$

TOTAL = 474 cy or

Approx 59 Bags

RFW 10-05-003/A-5/85

ABQ07

CALCULATION COVER SHEET

Project:	**INEEL V-Tank Remediation Project**				**Number of Sheets:** 1 of 9
Site:	INEEL Test Area North, Idaho Falls, Idaho				
Calculation Number:	ABQ07 – CE003		**Work Order Number:**	12393.002.001	
Subject:	**Lifting Requirements**				
Rev #:	**Date:**	**Revision:**	**Calculated by:**	**Checked by:**	**Approved:**
RAA	4/11/01	60%	R. Ederer	N/A	N/A
RAB	6/1/01	90%	R. Ederer	D. Bennecke	B.Keshian
RAC	6/27/01	90% Polish	D. Brennecke	B. Keshian	B. Keshian
RAD	9/27/01	Draft Final	D. Brennecke	B. Keshian	9/27/01

Client/Subject: INEEL-BBWI / V-tank Removal Project W.O. No.:12393.002.001
Task Description: Lifting Requirements Task: 90% Design Calc
Prepared by: R. Ederer

Problem Statement:

Evaluate the lifting requirements of the V-1, 2, 3, and V-9 tanks. Consider lifting of shipping casks, concrete rad-vault, and soil bags.

Method of Solution:

1. Estimate the tank surface area.
2. Estimate thickness of the steel.
3. Estimate the tank weight.

Assumptions: / DATA Provided by INEEL

1. The tanks are stainless steel (type 304 for this analysis)
2. The V-1, 2, 3 tanks are 10 ft. diameter and 19.5 ft. long.
3. The V-9 tanks is 3.5 ft diameter by 5.5 ft to top of cone section, cone is 1.75' long.

Sources of Formulas and References:

- Grove Hydraulic Crane Product literature
- Design Drawings
- Duratek shipping container and vault literature
- "Lift Liner" system product literature

Calculation:

A. Calculate the expected weight of V-1, V-2, and V-3 Tanks

1. Determine the surface area of the tanks.

$Dia_{tank} := 10$ $L_{tank} := 19.5$

$Area_{surface} := (Dia_{tank} \cdot \pi \cdot L_{tank}) + 2 \cdot \pi \cdot \frac{Dia_{tank}^2}{4}$ 785 sf

Assume the tank thickness: $t_{shell} := \frac{0.25}{12}$

2. Determine the tank weight

Steel volume is: $Vol_{sst} := t_{shell} \cdot Area_{surface}$ Vol_{sst} 16.35 cf

Assume the density of Type 304 stainless steel is:

$sg_{sst} := 8.04$ $\rho_{sst} := sg_{sst} \cdot 62.4$ ρ_{sst} 501.7 pcf

The tank weight is:

$W_{tank} := \rho_{sst} \cdot Vol_{sst}$ W_{tank} 8203 lbs

Assume approximately 2" of liquid or sludge left in the tank when lifted.

$s := \frac{2}{12}$ $r := 5$ $\alpha := \frac{s}{r}$ $\alpha = 0.033$

$W_{liquid} := (0.5 \cdot r^2 \cdot \alpha - \sin(\alpha)) \cdot L_{tank} \cdot (62.4 \cdot 1.2)$ W = 601 lbs

~~Adujst~~ tank weight for fittings, flanges, and miscellaeous piping (1,000 lbs).
Adjust

$W_{tank} := (W_{tank} + W_{liquid} + 1000)$ $W_{tank} := 9804$ lbs

B. **Estimate the weight of the V-9 tank**. To be conservative and simplify the calculation, assume the cone section is a cylinder.

$Dia_{tank.v9} := 4$ $L_{tank.v9} := 5 + 1.5$

$Area_{surface.v9} := \left(Dia_{tank.v9}^2 \cdot \frac{\pi}{2}\right) + L \cdot (\pi \cdot Dia_{tank.v9})$ area := 101.71 sf

Assume the tank thickness: $t_{shell} := \frac{0.25}{12}$

2. Determine the tank weight

Steel volume is: $Vol_{sst.v9} := t_{shell} \cdot Area_{surface.v9}$ $Vol_{sst.v9} =$ 2.11 cf

Assume the density of Type 304 stainless steel is:

$sg_{sst} := 8.04$ $\rho_{sst} := sg_{sst} \cdot 62.4$ ρ_{sst} 501.7 pcf

The tank weight is:

$W_{tank.v9} := \rho_{sst} \cdot Vol_{sst.v9}$ $W_{tank.v9} =$ 1063 lbs

Adujst tank weight for fittings, flanges, and miscellaeous piping (500 lbs).

$W_{tank.v9} := W_{tank.v9} + 500$ 1563 lbs

C. **Evaluate the lifting requirements for the tanks.** **Design lifting for V-1, 2, & 3 tanks**

1. In summary, the weight of each tanks is:

   V-1, V-2, and V-3 (each): W.tank =9804 lbs

   V-9: $W_{tank.v9} = 1563$ lbs

2. Assume the tanks are placed in granular fill material (cohesion = 0), with no groundwater therefore neglect the suction required to overcome the capillary forces.

   $c := 0$ $c_a := c \cdot 0.9$

3. Add the force to overcome soil friction. Assume the soil rises to the springline of the tank (5').

   a. Determine the active soil force on the tank

   $\gamma_{soil} := 111$ pcf $H := 5$ $\phi := 32 \cdot deg$

   $K_a := \frac{1 - \sin(\phi)}{1 + \sin(\phi)}$ $K_a = 0.307$

   $P_{vertical} := \gamma_{soil} \cdot H = 555$

   $P_{active} := K_a \cdot P_{vertical}$ $P_{active} = 172$ psf

   b. Determine the skin friction coefficient on the tank.

   $\delta := 17 \cdot deg$ $Ca := 0.9$ $f_o := c_a + P_{active} \cdot \tan(\delta)$ $f_o = 53.5$ psf

   c. Estimate the surface area of the tank in contact with soil.

   LΠD $\frac{(19.5 \times \Pi \times 10)}{2}$ $s_{tank} = 306$ sf

   d. Estimate the breaking force to overcome the soil friction

   $P_{break} := f_o \cdot s_{tank}$ $P_{break} = 16,387$ lbs

4. Estimate the lifting requirement for removing the largest tank.

   $Lift_{capacity} := (W_{tank} + P_{break})$ $Lift_{capacity} := 26191$ lbs or 13.1 tons

   9804 + 16387

Discussion

Summary of calcs:

weight of each V-1, V-2, and V-3 tanks (tons):	W ea.tank=4.9 tons	
weight of V-9 tank (tons):	$W_{tank.v9}$	0.781 tons
Tank lifting capacity required (tons)	$Lift_{capacity}$	13.1 tons

Select a Grove RT650E ~~Series~~ Rough Terrrain Hydraulic Crane or equal. A cut sheet is included as Attachment 1. This crane will be adequate for other lifting requirements on the job such as the "Rad Vault 8-120" with loaded HIC (66,700 lbs + 7,500 lbs = 74,200 lbs), DURATEK CNS 8-120B Type B shipping casks (49,300 lbs, empty; 63,980 lbs w/maximum payload) and soil bags (24,000 lbs).

ATTACHMENT 1

GROVE

RT600E SERIES

ROUGH TERRAIN HYDRAULIC CRANE

Dimensions

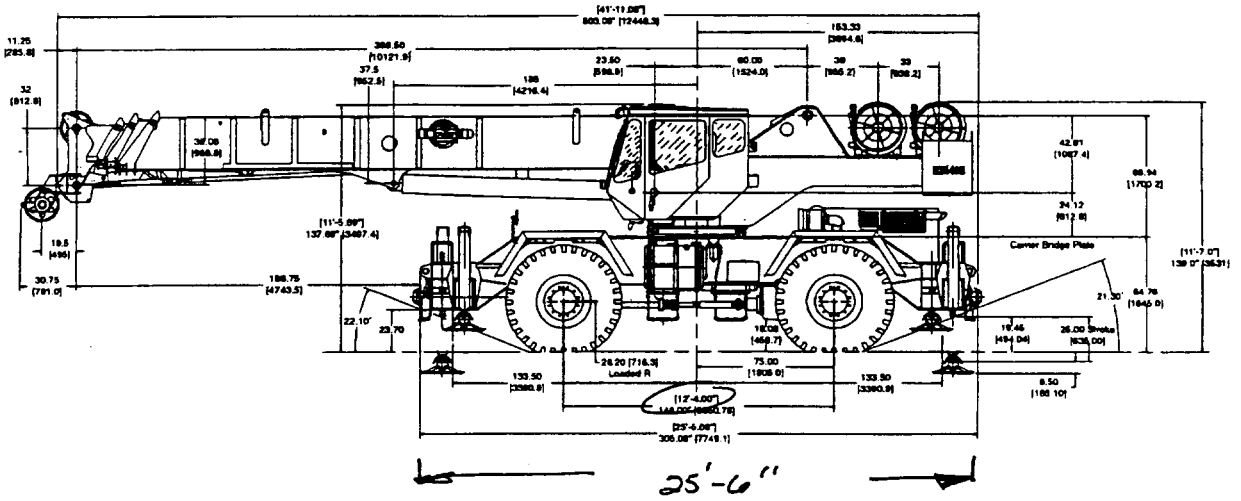

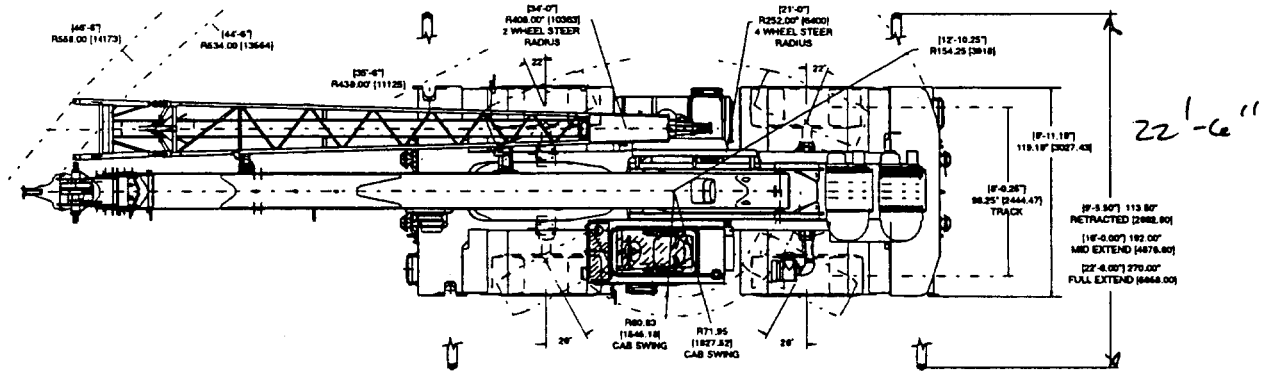

Note: ( ) Reference dimensions in mm

RT650E RATED LIFTING CAPACITIES IN POUNDS
33 FT. - 105 FT. BOOM
ON OUTRIGGERS FULLY EXTENDED - 360°

Radius in Feet	#0001								
	Main Boom Length in Feet								
	33	40	50	60	70	80	90	100	105
10	100,000 (69.5)	80,550 (73.5)	67,250 (77)						
12	87,100 (65.5)	79,150 (70.5)	64,200 (75)	*56,100 (78)					
15	69,050 (59.5)	69,550 (65.5)	59,950 (71)	51,800 (75)	45,200 (77.5)				
20	50,500 (47.5)	50,950 (57)	51,400 (64.5)	44,500 (69.5)	38,550 (73)	34,450 (75.5)	*31,400 (78)		
25	38,300 (32)	38,850 (47)	39,350 (58)	39,650 (64.5)	37,100 (68.5)	29,850 (72)	27,250 (74.5)	21,000 (76.5)	18,350 (77.5)
30		30,700 (34.5)	31,200 (50.5)	31,500 (58.5)	31,700 (64)	26,350 (68)	24,100 (71)	21,000 (73.5)	18,350 (74.5)
35			25,450 (41.5)	25,750 (52.5)	26,000 (59)	23,650 (64)	21,500 (67.5)	19,150 (70)	18,350 (71.5)
40			20,850 (30.5)	21,200 (46)	21,600 (54)	21,350 (59.5)	19,400 (64)	16,650 (67)	17,300 (68.5)
45				17,100 (38)	17,350 (48.5)	17,300 (55)	17,300 (60)	14,650 (64)	15,750 (65.5)
50				13,950 (28)	14,150 (42.5)	14,200 (50.5)	14,200 (56)	13,000 (60.5)	14,300 (62.5)
55					11,700 (35)	11,750 (45.5)	11,850 (52)	11,900 (57)	12,000 (59)
60					9,730 (26)	9,870 (39.5)	9,980 (47.5)	10,100 (53.5)	10,150 (55.5)
65						8,300 (33)	8,440 (42.5)	8,600 (49.5)	8,680 (52)
70						6,960 (24.5)	7,170 (37.5)	7,340 (45.5)	7,430 (48.5)
75							6,080 (31)	6,290 (40.5)	6,390 (44.5)
80							5,130 (23)	5,380 (35.5)	5,490 (40)
85								4,580 (29.5)	4,720 (35)
90								3,880 (22)	4,020 (29)
95									3,400 (21.5)
Minimum boom angle (°) for indicated length (no load)									0
Maximum boom length (ft.) at 0° boom angle (no load)									105

NOTE: ( ) Boom angles are in degrees.
#LMI operating code. Refer to LMI manual for operating instructions.
*This capacity is based on maximum boom angle.

Lifting Capacities at Zero Degree Boom Angle On Outriggers Fully Extended - 360°

Boom Angle	Main Boom Length in Feet								
	33	40	50	60	70	80	90	100	
0°	16,250 (28.2)	12,500 (35)	8,780 (45)	6,290 (55)	4,510 (65)	3,160 (75)	2,110 (85)	1,260 (95)	

NOTE: ( ) Reference radii in feet.

A6-829-100936

RT600E SERIES ON RUBBER CAPACITIES

STATIONARY CAPACITIES
360°

Radius in Feet	#9005				
	Main Boom Length in Feet				
	33	40	50	60	70
10	38,550 (69.5)	38,550 (73.5)			
12	32,550 (65.5)	32,550 (70.5)	32,550 (74.5)		
15	23,700 (59.5)	23,700 (65.5)	23,700 (71)	23,700 (75.5)	
20	14,450 (47.5)	14,450 (57)	14,450 (64.5)	14,450 (70)	14,450 (73.5)
25	9,640 (32)	9,640 (47)	9,640 (58)	9,640 (65)	9,640 (69.5)
30		6,840 (34.5)	6,840 (50)	6,840 (59)	6,840 (64.5)
35			4,850 (41.5)	4,850 (53)	4,850 (60)
40			3,450 (30.5)	3,450 (46.5)	3,450 (54.5)
45				2,410 (38.5)	2,410 (49)
50				1,610 (28.5)	1,610 (43)
Min. boom angle (°) for indicated length (no load)					30
Max. boom length (ft.) at 0° boom angle (no load)					60

NOTE: ( ) Boom angles are in degrees.
#LMI operating code. Refer to LMI manual for operating instructions.

Lifting Capacities at Zero Degree Boom Angle On Rubber - 360°					
Boom Angle	Main Boom Length in Feet				
	33	40	50		
0°	7,580 (28.2)	4,850 (35)	2,410 (45)		

NOTE: ( ) Reference radii in feet. A6-829-100836A

STATIONARY CAPACITIES
DEFINED ARC OVER FRONT (See Note 3)

Radius in Feet	#9005				
	Main Boom Length in Feet				
	33	40	50	60	70
10	46,600 (69.5)	40,800 (73.5)	34,600 (77)		
12	40,800 (65.5)	40,800 (70.5)	34,600 (74.5)		
15	34,000 (59.5)	34,000 (65.5)	34,000 (71)	26,650 (75.5)	21,500 (78)
20	26,050 (47.5)	26,050 (57)	26,050 (64.5)	26,050 (70)	21,500 (73.5)
25	18,200 (32)	18,200 (47)	18,200 (58)	18,200 (65)	18,200 (69.5)
30		13,100 (34.5)	13,100 (50)	13,100 (59)	13,100 (64.5)
35			10,050 (41.5)	10,050 (53)	10,050 (60)
40			7,900 (30.5)	7,900 (46.5)	7,900 (54.5)
45				6,290 (38.5)	6,290 (49)
50				5,050 (28.5)	5,050 (43)
55					4,060 (35.5)
60					3,260 (26.5)
Min. boom angle (°) for indicated length (no load)					0
Max. boom length (ft.) at 0° boom angle (no load)					70

NOTE: ( ) Boom angles are in degrees.
#LMI operating code. Refer to LMI manual for operating instructions.

Lifting Capacities at Zero Degree Boom Angle On Rubber - Defined Arc Over Front					
Boom Angle	Main Boom Length in Feet				
	33	40	50	60	70
0°	14,550 (28.2)	10,050 (35)	6,290 (45)	4,060 (55)	2,590 (65)

NOTE: ( ) Reference radii in feet. A6-829-100835A

ABQ08

CALCULATION COVER SHEET

Project:	**INEEL V-Tank Remediation Project**				**Number of Sheets:** 1 of 8
Site:	INEEL Test Area North, Idaho Falls, Idaho				
Calculation Number:	ABQ08 – CE004		**Work Order Number:**	12393.002.001	
Subject:	**Drum Storage/Water Storage/Decontamination Area Secondary Containment Requirements**				
Rev #:	**Date:**	**Revision:**	**Calculated by:**	**Checked by:**	**Approved:**
RAA		60%	R. Ederer		
RAB	5/31/01	90%	R. Ederer	B. Keshian	B. Keshian
RAC	6/29/01	90% Polish	D. Brennecke	B. Keshian	B. Keshian
RAD	9/27/01	Draft Final	D. Brennecke	B. Keshian	Jim Lockhart
RAE	10/23/01	Draft Final Polish	D. Brennecke	B. Keshian	Jim Lockhart 10/24/01

WESTON
MANAGERS DESIGNERS/CONSULTANTS

CLIENT/SUBJECT _____ W.O. NO. _____

TASK DESCRIPTION _____ TASK NO. _____

PREPARED BY _____ DEPT _____ DATE _____

MATH CHECK BY _____ DEPT _____ DATE _____

METHOD REV. BY _____ DEPT _____ DATE _____

APPROVED BY _____ DEPT _____ DATE _____

Problem Statement:

Estimate the containment ~~area~~ volume required for ~~storage~~ secondary containment of contaminated liquids.

Method of Solution:

1. Determine the area needed for containers.
2. Determine the volume need for 25 yr / 24 hr storm.
3. Determine volume of liquids in containers.
4. Design containment berm with a capacity to contain the volume of contaminated liquids & 25 yr/24 hr. storm.

Sources of Information:

Design Drawings
Design information from Bartlett, INEEL and BBWI

NOAA ATLAS 2, VOL V, ISOPLUVIALS OF 25 yr / 24 hr. Precipitation in tenths of an inch
TR-55

Assumptions:

$CN = 79$

$$S = \frac{1000}{CN} - 10$$

$$Q = \frac{(P - 0.2S)^2}{(P + 0.8S)}$$

DETERMINATION OF WATER SOURCES

Item	Value	Units
Sources of water		
V-1	1164	gallons
V-2	1076	gallons
V-3	7648	gallons
V-9	70	gallons
Decon	2000	gallons
Runoff	15000	gallons
Rinse	500	gallons
Total water volume	27458	gallons

WESTON
MANAGERS DESIGNERS/CONSULTANTS

CLIENT/SUBJECT _____ W.O. NO. _____

TASK DESCRIPTION _____ TASK NO. _____

PREPARED BY _____ DEPT _____ DATE _____

MATH CHECK BY _____ DEPT _____ DATE _____

METHOD REV. BY _____ DEPT _____ DATE _____

APPROVED BY _____ DEPT _____ DATE _____

Assumptions. Con't

- Contain 100% volume of the largest container or 10% of total storage volume plus volume of 25 YR 24 HR storm per 40 CFR 264.175b3

- Total storage volume:

  Decon, Runoff, Rinse, Tank water ≈ 30,000 GALLONS

- Largest container will be 10,000 GAL water tank (12' ϕ x 14' HIGH) Area req'd = $\pi 6^2$ = 113 SF/TANK

- ESTIMATED AREA OF CONTAINMENT AREA FROM DRAWINGS

$$\approx 6{,}000 \text{ SF} \times \frac{\text{mi}^2}{(5280 \text{ FT/m})^2} = 0.000215 \text{ mi}^2$$

WESTON
MANAGERS DESIGNERS/CONSULTANTS

CLIENT/SUBJECT _____ W.O. NO. _____

TASK DESCRIPTION _____ TASK NO. _____

PREPARED BY _____ DEPT _____ DATE _____

MATH CHECK BY _____ DEPT _____ DATE _____

METHOD REV. BY _____ DEPT _____ DATE _____

APPROVED BY _____ DEPT _____ DATE _____

Calculations:

Volume of Stormwater from within containment area

$V_{AC\ FT} = Q * Am * 53 * 33$

Am = Area in mi^2

$$Q = \frac{(P_{25} - 0.2S)^2}{(P + 0.8S)}$$

$S = \frac{1000}{CN} - 10 \Rightarrow S = \frac{1000}{79} - 10 = 2.66$

$P_{25} = 2.0$

$Q = 0.522$ in

$V = 0.522 \times 0.000215\ mi^2 \times 53.33$

$= 0.005985\ AC\text{-}FT \times \frac{43{,}560\ SF}{AC} = 260.7\ CF$

$= 260.7\ CF \times \frac{7.48\ gal}{CF}$

$= \underline{1950\ GAL}$ ←

Storage Volume Req'd

Vol = Tank + 25 YR 24 HR STORM
= 10,000 GAL + 1950 GAL

= $\underline{11{,}950\ GAL}$ ←

WESTON MANAGERS DESIGNERS/CONSULTANTS

SHEET 6 of 8

CLIENT/SUBJECT INEEL V-TANK W.O. NO.

TASK DESCRIPTION RECALCULATE SIZE OF DRUM STORAGE AREA TASK NO.

PREPARED BY DFB DEPT DATE ~~8/14/01~~ 10/22/01

MATH CHECK BY DEPT DATE

METHOD REV. BY DEPT DATE

APPROVED BY

DEPT DATE

ASSUMPTIONS

- DRUMS ARE MOVED DIRECTLY TO INTERIM STORAGE AFTER FILLING AND NO MORE THAN 10 DRUMS ARE STORED IN DRUM STORAGE AREA AT ONE TIME
- DRUM STORAGE AREA IS 25 □'/DRUM
- 10,000 GAL H_2O STORAGE TANKS (12'ø) REQUIRE $\pi 6^2 = 113$ SF/TANK
- 30% ADDITIONAL AREA REQD FOR LOGISTICS
- 10,975 GAL OF SECONDARY CONTAINMENT STORAGE IS REQD (AB908RAC) (10,000 GAL + 1950/2 = 10,975) ASSUMES 3,000 SF AREA CATCHES STORM WATER

CALCULATE AREA REQD

DRUMS	25 □'/DRUM × 10 DRUMS	=	250 □'
10,000 GAL WATER STORAGE	113 SF/TANK × ~~3~~ 2 TANKS	=	~~339~~ 226 □'
1,000 GAL WATER CONTAINER (6' × 14.5 = 87 □')	87 SF/TANK × 10 TANKS		870 □'
			~~589~~ □' 1346
	+30% LOGISTICS		~~177~~ □' 404
			~~766~~ □' 1750 □'
	ACCESS ROAD 12'×60'		720 □'
			~~1486~~ □' 2470 ≈ ~~1500~~ 2500 □'

CALCULATE MIN AREA REQD ASSUMING MINIMUM STORAGE DEPTH OF 1 FOOT

$$10{,}975 \text{ GAL} \times \frac{ft^3}{7.48 \text{ gal}} \times \frac{}{1 \text{ ft}} = 1{,}467 \text{ □' MIN AREA REQD}$$

⇒ MINIMUM DIMENSIONS OF AREA = $\sqrt{1500}$ □' = 38.7'

∴ MAKE AREA 50' × 60' TO ACCOMODATE SEMI TRACTOR TRAILOR DECON

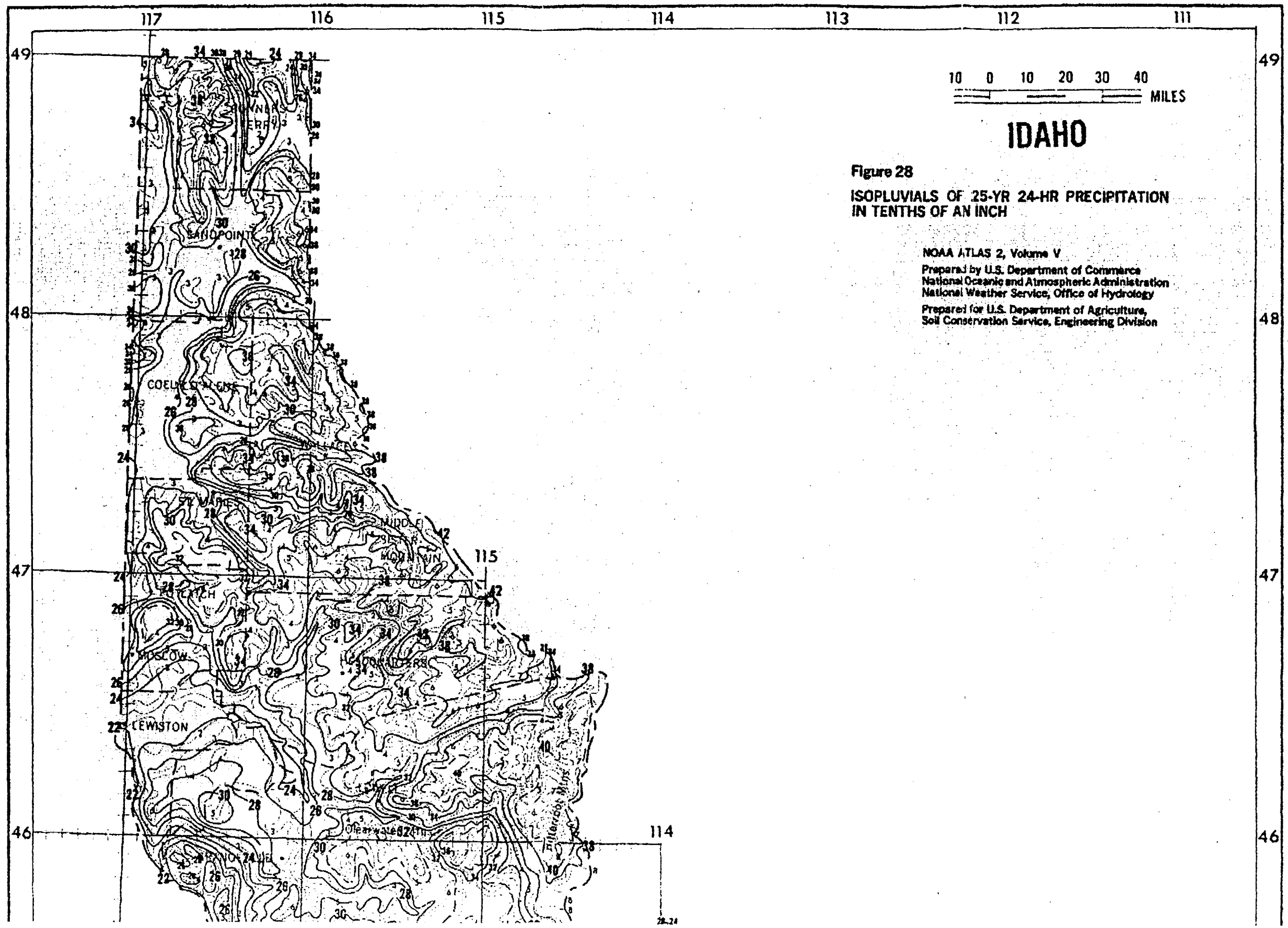

Figure 28

ISOPLUVIALS OF 25-YR 24-HR PRECIPITATION IN TENTHS OF AN INCH

NOAA ATLAS 2, Volume V

Prepared by U.S. Department of Commerce
National Oceanic and Atmospheric Administration
National Weather Service, Office of Hydrology

Prepared for U.S. Department of Agriculture,
Soil Conservation Service, Engineering Division

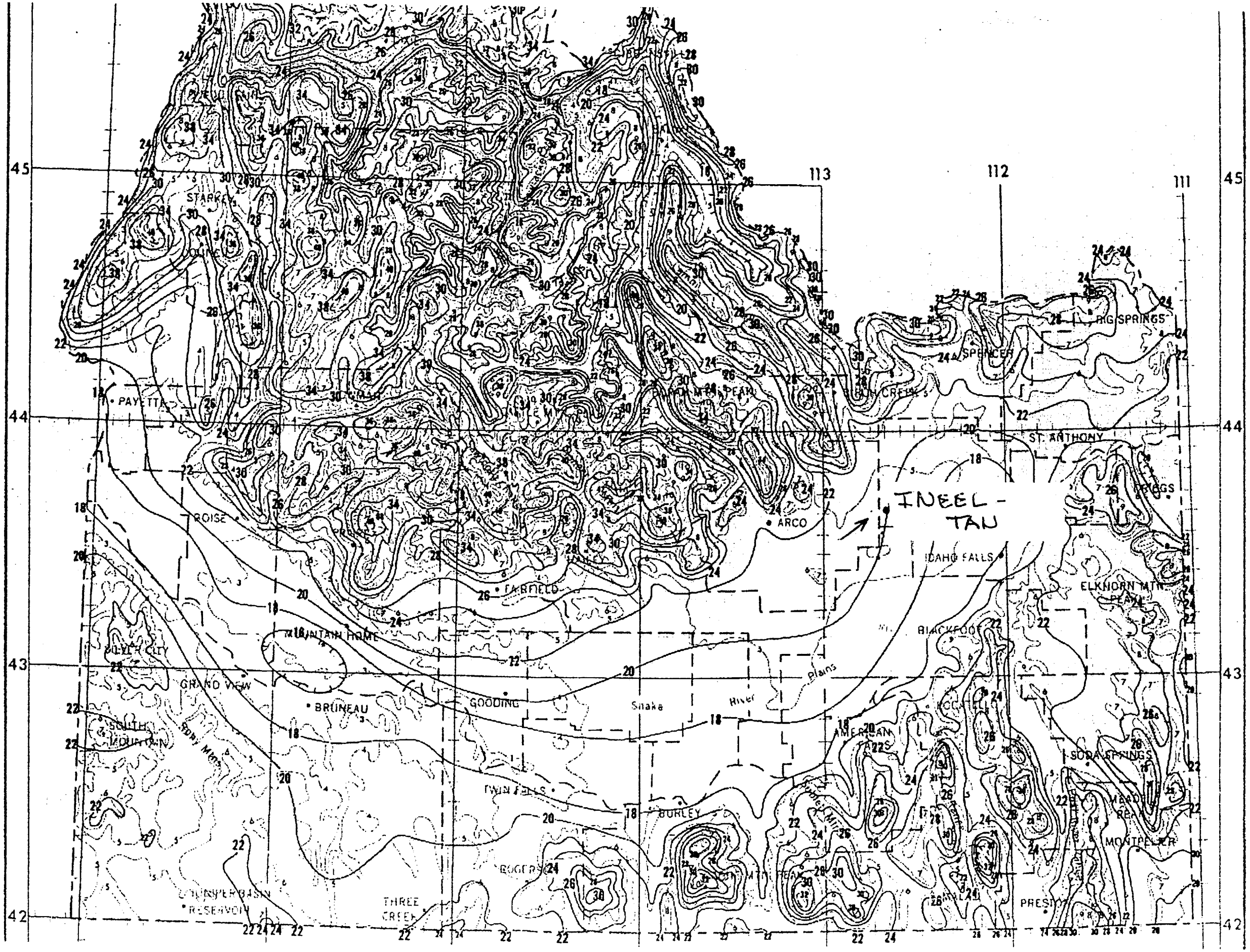
INEEL - TAN
113
112
111
45
44
43
42
STARKEY
PAYETTE
BOISE
FAIRFIELD
MOUNTAIN HOME
GRAND VIEW
BRUNEAU
GOODING
Snake
River
Plains
TWIN FALLS
BURLEY
ROGERS
THREE CREEK
RESERVOIR
SOUTH MOUNTAIN
SILVER CITY
ARCO
IDAHO FALLS
BLACKFOOT
AMERICAN FALLS
SPENCER
RIG SPRINGS
ST. ANTHONY
ELKHORN MTN PEAK
SODA SPRINGS
MONTPELIER
PRESTON

ABQ09

CALCULATION COVER SHEET

Project:	**INEEL V-Tank Remediation Project**				**Number of Sheets:** 1 of 52
Site:					
Calculation Number:	ABQ09 – CE005		**Work Order Number:**	12393.002.001	
Subject:	**HIC Storage/Drum Filling Staging Area Secondary Containment Requirements**				
	Date:	**Revision:**	**Calculated by:**	**Checked by:**	**Approved:**
RAA		60%	R. Ederer		
RAB	5/7/01	90%	R. Ederer	B. Keshian	B. Keshian
RAC	6/29/01	90% Polish	D. Brennecke	B. Keshian	B. Keshian
RAD	9/27/01	Draft Final	D. Brennecke	B. Keshian	Jim Lockhart
RAE	10/23/01	Draft Final Polish	D. Brennecke	B. Keshian	Jim Lockhart 10/24/01

WESTON
MANAGERS DESIGNERS/CONSULTANTS

CLIENT/SUBJECT _____ W.O. NO. _____

TASK DESCRIPTION _____ TASK NO. _____

PREPARED BY _____ DEPT _____ DATE _____

MATH CHECK BY _____ DEPT _____ DATE _____

METHOD REV. BY _____ DEPT _____ DATE _____

APPROVED BY _____

DEPT _____ DATE _____

Problem Statement:

Estimate the secondary containment volume required for HIC storage area and determine area required for HICs and drum filling operation.

Assumptions:

- 9 ~ 9½' ϕ HIC will be needed.
- Estimated containment area from drawing

$$\approx 3500\ SF \times \frac{mi^2}{(5280\ ft)^2} = 0.000125\ mi^2$$

- Contain 100% volume of the largest container or 10% of total storage volume plus volume of 25 YR 24 HR storm per 40 CFR 264.175b3
- Largest container will be sludge HIC w/ 107.6 CF (805 gal) capacity

Sources and References

Design Drawings
Duratek product information
NOAA Precipitation atlas (25 YR/ 24 HR)
Bartlett Services, Art Derosiers

WESTON
MANAGERS DESIGNERS/CONSULTANTS

CLIENT/SUBJECT _____ W.O. NO. _____

TASK DESCRIPTION _____ TASK NO. _____

PREPARED BY _____ DEPT _____ DATE _____

MATH CHECK BY _____ DEPT _____ DATE _____

METHOD REV. BY _____ DEPT _____ DATE _____

APPROVED BY _____ DEPT _____ DATE _____

Calculations:

storage volume = 9 HIC × 805 gals/HIC = 7245 gals
(968.5 CF)

containment volume = 10% × 7248 gal = 725 gal < 805 gal
∴ use 805 gal

Stormwater Volume:

$V = Q * Am \cdot 53.33$

$Cn = 79$

$S = 2.66$

$P_{25} = 2.0$

Am = Area in (miles)^2

$Am = 0.000125\ mi^2$

$$Q = \frac{(P_{25} - 0.2S)^2}{(P + 0.8S)} = 0.522$$

$$V = 0.522 \times 0.000125 \times 53.33$$
$$= 0.00348\ AC\text{-}FT \times 43{,}560\ \frac{SF}{AC}$$
$$= 152\ CF \times \frac{7.48\ gal}{CF}$$
$$= \underline{\underline{1137\ gal}} \leftarrow$$

WESTON
MANAGERS DESIGNERS/CONSULTANTS

CLIENT/SUBJECT _____ W.O. NO. _____

TASK DESCRIPTION _____ TASK NO. _____

PREPARED BY _____ DEPT _____ DATE _____

MATH CHECK BY _____ DEPT _____ DATE _____

METHOD REV. BY _____ DEPT _____ DATE _____

APPROVED BY _____ DEPT _____ DATE _____

Containment Storage Volume Req'd

Tank + 25 YR 24 HR STORM

805 gal + 1137 gal = 1942 gal

Height of Berm Req'd

Assume flat bottom as shown on dwg

$$\text{Berm HT} = 1942\ \text{GAL} \times \frac{1}{3500\ \text{SF}} \times \frac{\text{CF}}{7.48} = 0.07' \times 12''/\text{FT}$$

$$= 0.89''$$

0.89" < 12" BERM HEIGHT ∴ OK

DETERMINATION OF SLUDGE HIC STORAGE AREA REQUIRED

Item	Value	Units			
Tank diameter	10	feet			
Tank length	19.3	feet			
Sludge solid fraction	0.65				
Tank/sludge					
V-1	520	gallons	69	cubic feet	100
V-2	520	gallons	69	cubic feet	
V-3	653	gallons	87	cubic feet	
V-9	250	gallons	33	cubic feet	
Total	1943	gallons	259	cubic feet	
HIC capacity	54	cubic feet	(CNSI PL8-120 FP/FEDX at 55% capacity)		
Number of HICs	8		(One HIC needed for water polishing; sludges within individual tanks will not be mixed)		
HIC's diameter	5	feet	(CNSI PL8-120 FP/FEDX)		
Shield diameter	9.5	feet			
Required area/each	156	square feet			
Added logistics area	30%				
Area for HICS	1625	square feet			
Area for HIC-drum TX	1625	square feet			
Total area required for sludge HIC/Drum Filling	**3250**	**square feet**			

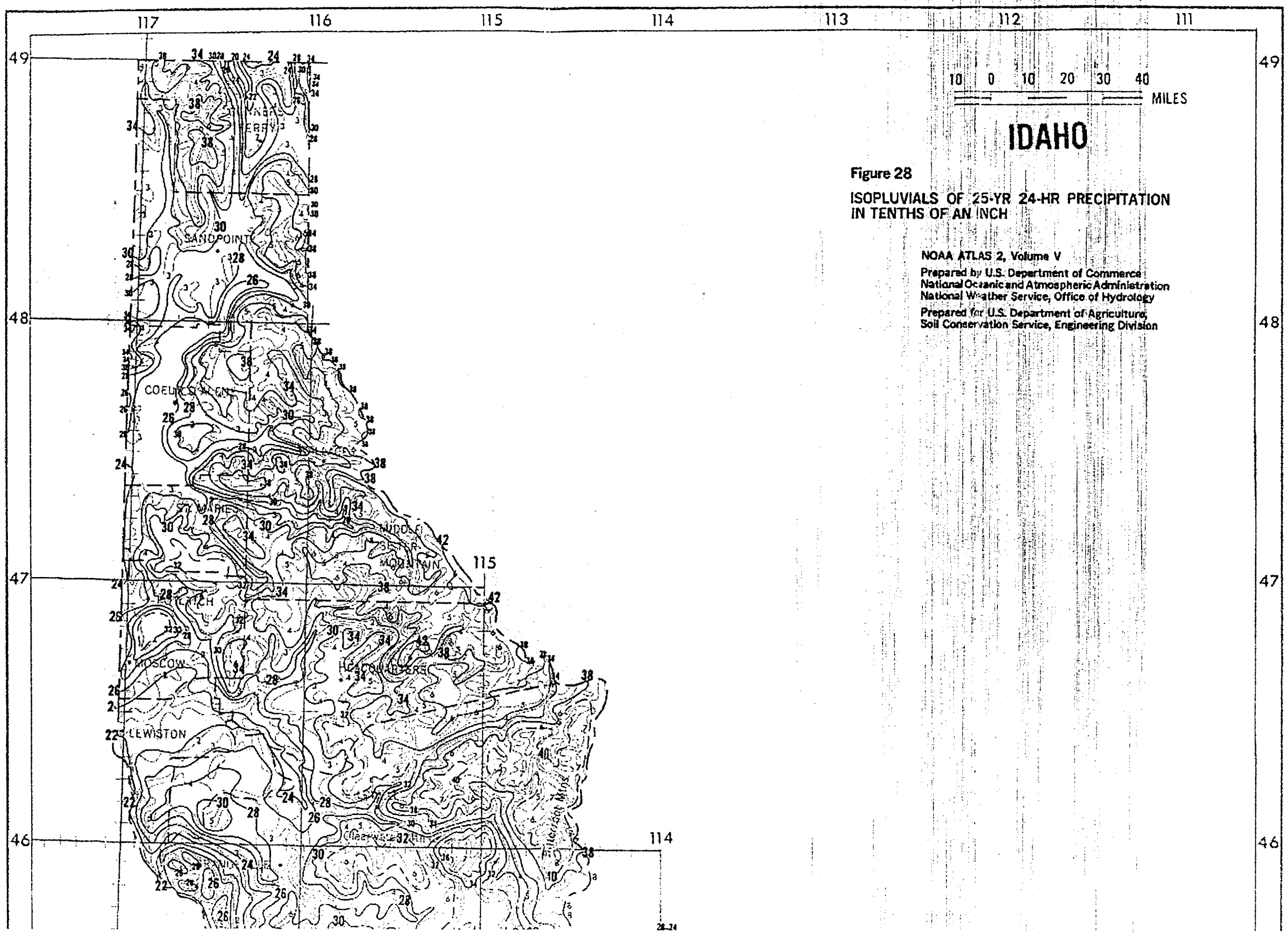

Figure 28

ISOPLUVIALS OF 25-YR 24-HR PRECIPITATION IN TENTHS OF AN INCH

NOAA ATLAS 2, Volume V

Prepared by U.S. Department of Commerce
National Oceanic and Atmospheric Administration
National Weather Service, Office of Hydrology

Prepared for U.S. Department of Agriculture,
Soil Conservation Service, Engineering Division

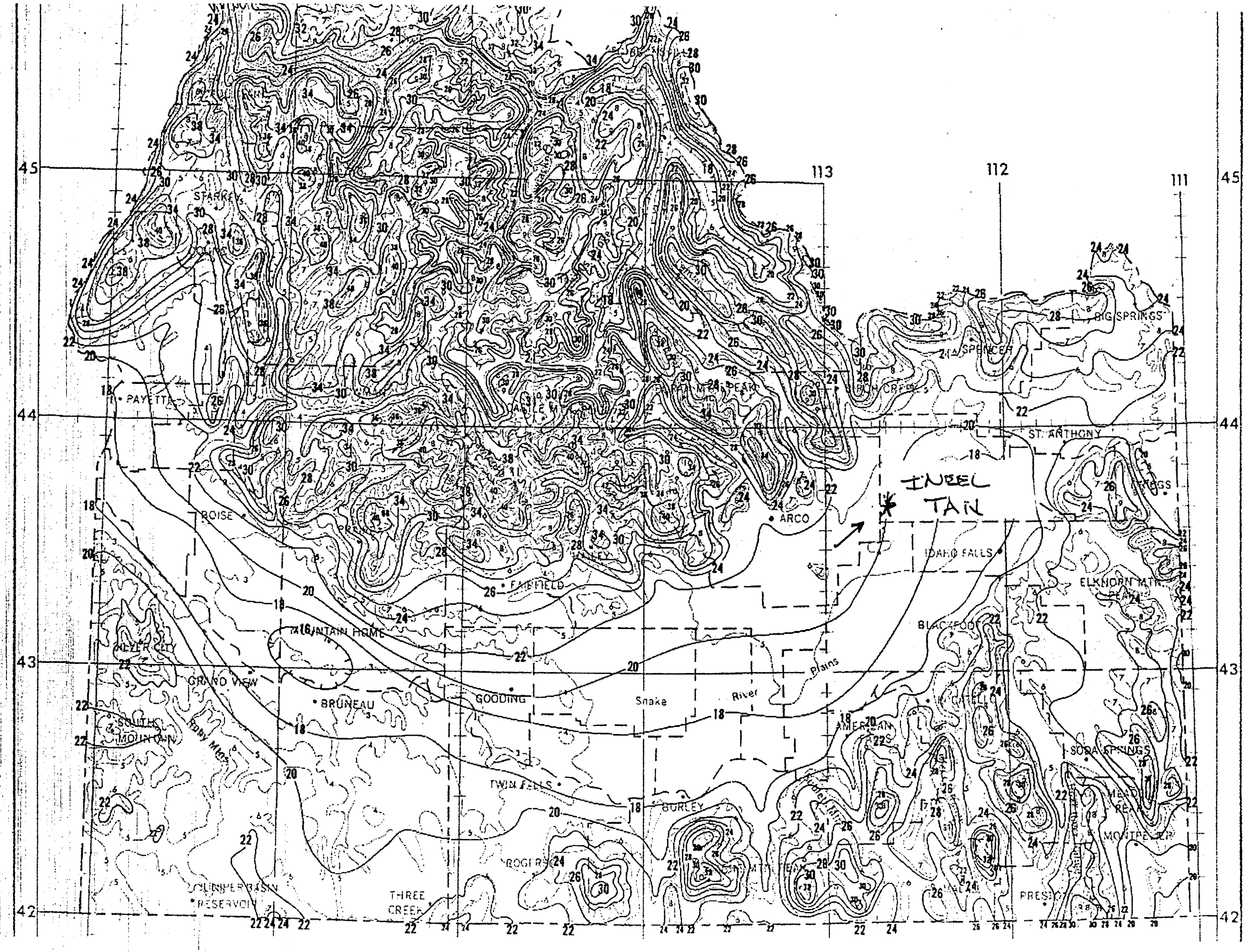
45
44
43
42
113
112
111
STARKEY
PAYETTE
BOISE
ARCO
INEEL
TAN
IDAHO FALLS
ELKHORN MTN
BIG SPRINGS
SPENCER
ST. ANTHONY
FAIRFIELD
MOUNTAIN HOME
GRAND VIEW
BRUNEAU
GOODING
Snake
River
Plains
BLACKFOOT
AMERICAN
SODA SPRINGS
MONTPELIER
PRESTON
TWIN FALLS
BURLEY
ROGERS
THREE
CREEK
SOUTH
MOUNTAIN
Ruby Mtns
RESERVOIR

Duratek

Table 3 Duratek Polyethylene HICs Dimensions and Volumes					
Empty Size/Type Polyethylene HICs	Weight (Lbs.)	Height (In.)	Diameter (in.)	Internal Usable Vol. (cu ft.)	Disposal Volume
PL6-80 MT	500	56.5	57	73.3	83.4
PL6-80 MTIF	525	56.5	57	64.1	83.4
PL6-80 FR	550	56.5	57	73.3	83.4
PL6-80 FP/FEDX	625	56.5	57	73.3	83.4
PL8-120 MT	600	73.5	60	107.6	120.3
PL8-120 MTIF	625	73.5	60	95.8	120.3
PL8-120 FR	650	73.5	60	107.6	120.3
PL8-120 FP/FEDX	725	73.5	60	107.6	120.3
PL14-170 MT	800	71.5	72.5	150.3	170.8
PL14-170 MTIF	850	71.5	72.5	134.9	170.8
PL14-170 FR	850	71.5	72.5	150.3	170.8
PL14-170 FP/FEDX	1,000	71.5	72.5	150.3	170.8
PL14-195 MT	850	78	74	171.4	194.1
PL14-195 MTIF	900	78	74	154.6	194.1
PL14-195 FR	900	78	74	171.4	194.1
PL14-195 FP/FEDX	1,050	78	74	171.4	194.1
PL14-215 MT	1,200	78.375	76	189.2	205.8
PL14-215 MTIF	1,250	78.375	76	171.7	205.8
PL14-215 FR	1,250	78.375	76	189.2	205.8
PL14-215 FP/FEDX	1,400	78.375	76	189.2	205.8
PL21-300 MT	1,100	108	80	285.1	314.2
PL21-300 MTIF	1,175	108	80	262.1	314.2
PL21-300 FR	1,150	108	80	285.1	314.2
PL21-300 FP/FEDX	1,350	108	80	285.1	314.2

ABQ10

CALCULATION COVER SHEET

Project:	**INEEL V-Tank Remediation Project**				**Number of Sheets:** 1 of 33
Site:	Test Area North, Idaho Falls, Idaho				
Calculation Number:	ABQ10-CE006		**Work Order Number:**	12393.002.001	
Subject:	**Storm Water Hydrology**				
Rev #:	**Date:**	**Revision:**	**Calculated by:**	**Checked:**	**Approved:**
RAA	5/15/01	90%	Chris Ehrsam	Berg Keshian	B. Keshian
RAB	6/27/01	90% Polish	D. Brennecke	B. Keshian	B. Keshian
RAC	9/27/01	Draft Final	D. Brennecke	B. Keshian	9-28-01

Problem Statement:

Determine on-site storm water volumes that must be retained and size off-site storm water run-on control features.

Method of Solution:

Urban Hydrology for Small Watersheds, TR-55
Haestad Methods – Flowmaster Software

Assumptions:

Soil type is the same throughout the site
Soil Hydrological Group is B
Storm water runoff in the HIC/Drum Filling Area will be contain within its boundary by a berm.
Storm water runoff in the Liquid Waste Storage Area will be contain within its' boundary by a berm.
The existing system carrying Storm water runoff from Basins 1 and 2 have the capacity to accept the flows.

Sources of Formulas and References:

INEEL/BBWI Drawings
Urban Hydrology for Small Watersheds, TR-55
NOAA Atlas 2, Volume V, Isopluvials of 2yr./24 hr. Precipitation
Site Photographs
Information gathered from Site Visit
Survey provided by INEEL

Calculation:

See Attachments

Discussion:

Six Basins were used to develop the storm water analysis for this site (see attached Basin Map). A 2yr/24hr storm was used to calculate the storm water volume and flow rate for each basin. All storm water will be kept on site. Offsite flows are diverted by the proposed V-ditches and discharge into existing systems. The new 21" corrugated metal pipe culvert replacing the 8" and 15" pipe culverts crossing the site exceeds the capacity of the existing culverts.

Storm water runoff from roof 616 will be captured in rain gutters and discharged offsite.

Summary:

Basin Number	Peak Discharge (CFS)	Storm water Volume (CF)
1	0.027	116.2
2	0.043	185.8
3	0.123	299.7
4	0.065	200
5	0.06	149
6	0.280	694

V-Ditch at East Boundary:
A one-foot deep v-ditch installed at 1% grade will adequately handle peak discharge rates for Basins 1 and 2.

21" CMP:
Pipe can handle 7.0 cfs at 0.67% grade. Pipe can handle a drainage area of 5 acres if a 100-year 24-hour storm occurred. Pipe can handle a drainage area of 75 acres if a 2-year 24-hour storm occurred. Mapping was not available to determine actual size of drainage area but field inspection indicates that drainage area is less than 5 acres; therefore, 21" CMP should be more than adequate.

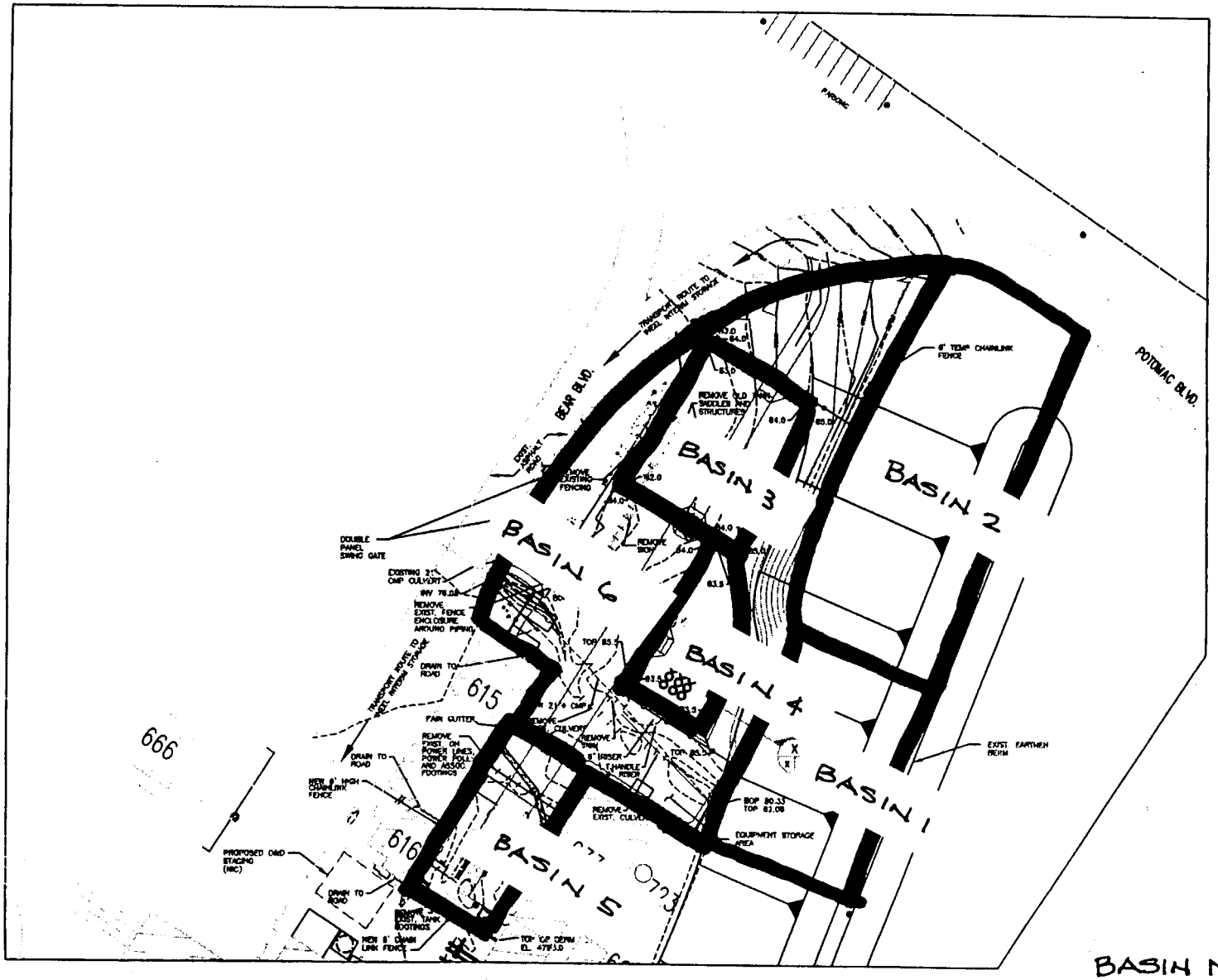

CONSTRUCTION NOTES:

1. OVERHEAD STEAM/CONDENSATION AND POWER LINES AND SUPPORT STRUCTURES ARE TO BE REMOVED BY BBWI PRIOR TO START OF WORK.
2. ONE FOOT (1') OF COVER IS REQUIRED OVER NEW 21" CMP CULVERT.
3. PLACE JERSEY BARRIERS AROUND 8" RISER AND T-HANDLE 8" RISER.

BASIN MAP

SCALE 1" = 20'

Revisions						
Rev. No.:	Date:	Description:	Drawn By:	Checked By:	Project A/E:	Approval:

		Date
Designed by:	B. Edwar	8/01/01
Drawn by:	J. M. M.	8/01/01
Checked by:	B. Brunsdale	8/01/01
Project Manager:	B. Hoskins	8/01/01
Client Approval:		

WESTON

6501 AMERICAS PARKWAY
SUITE 800
ALBUQUERQUE, NM 87110
(505) 884-6000

V-TANK REMEDIATION PROJECT
IDAHO FALLS, IDAHO

GRADING AND SURFACE DEMOLITION PLAN

DRAWING NO.: ABQ 00011-RAA-C02
PROJECT NO.: 12302.002.001

SHEET 4 of 14

3 of 32

Worksheet 2: Runoff curve number and runoff

Project	By	Date
Ineel- V. tanks Remediation	C. Ehrsam	5/23/01
Location	**Checked**	**Date**
Idaho Falls, Idaho		

Check one: ☐ Present ☑ Developed BASIN 1

1. Runoff curve number

Soil name and hydrologic group (appendix A)	Cover description (cover type, treatment, and hydrologic condition; percent impervious; unconnected/connected impervious area ratio)	CN[1/] Table 2-2	CN[1/] Figure 2-3	CN[1/] Figure 2-4	Area ☑ acres ☐ mi² ☐ %	Product of CN x area
B	gravel, natural grass	79			.291	22.99

[1/] Use only one CN source per line

Totals ➡ .291 | 22.99

CN (weighted) = $\frac{\text{total product}}{\text{total area}} = \frac{22.99}{.291} = 79$; **Use CN** ➡ 79

2. Runoff

		Storm #1	Storm #2	Storm #3
Frequency	yr	2		
Rainfall, P (24-hour)	in	1.1	SEE Pg 24/32	
Runoff, Q (Use P and CN with table 2-1, figure 2-1, or equations 2-3 and 2-4)	in	0.1001		

$S = \frac{1000}{CN} - 10 = 2.66$

$Q = \frac{(P - 0.2S)^2}{(P + 0.8S)} = 0.100$

Worksheet 3: Time of Concentration (T_c) or travel time (T_t)

Project	By	Date
Inee l - V. tanks	C. Ehrsam	5/28/01
Location	**Checked**	**Date**
Idaho Falls, Idaho		

Check one: ☐ Present ☑ Developed

Check one: ☑ T_c ☐ T_t through subarea

Notes: Space for as many as two segments per flow type can be used for each worksheet. Include a map, schematic, or description of flow segments.

Sheet flow (Not to be used for T_t)

Segment ID	1		
1. Surface description (table 3-1)	gravel/bare soil		
2. Manning's roughness coefficient, n (table 3-1)	.011		
3. Flow length, L (total L † 300 ft) ft	100		
4. Two-year 24-hour rainfall, P_2 in	1.1		
5. Land slope, s ft/ft	.1313		
6. $T_t = \frac{0.007\ (nL)^{0.8}}{P_2^{0.5}\ s^{0.4}}$ Compute T_t hr	.0162	+	= .0162

min. = .10 hr = .10

Shallow concentrated flow

Segment ID			
7. Surface description (paved or unpaved)			
8. Flow length, L ft			
9. Watercourse slope, s ft/ft			
10. Average velocity, V (figure 3-1) ft/s			
11. $T_t = \frac{L}{3600\ V}$ Compute T_t hr		+	=

Channel flow

Segment ID			
12. Cross sectional flow area, a ft^2			
13. Wetted perimeter, p_w ft			
14. Hydraulic radius, $r = \frac{a}{p_w}$ Compute r ft			
15 Channel slope, s ft/ft			
16. Manning's roughness coefficient, n			
17. $V = \frac{1.49\ r^{2/3}\ s^{1/2}}{n}$ Compute V ft/s			
18. Flow length, L ft			
19. $T_t = \frac{L}{3600\ V}$ Compute T_t hr		+	=

20. Watershed or subarea T_c or T_t (add T_t in steps 6, 11, and 19) Hr .10

Worksheet 4: Graphical Peak Discharge method

Project	By	Date
Location	Checked	Date

Check one: ☐ Present ☑ Developed

1. Data

Drainage area ..... A_m = 0.0005 mi² (acres/640)

Runoff curve number ..... CN = 79 (From worksheet 2)

Time of concentration ..... T_c = .10 hr (From worksheet 3)

Rainfall distribution ..... = II (I, IA, II III)

Pond and swamp areas sprea
throughout watershed ..... = 0 percent of A_m (_____ acres or mi² covered)

		Storm #1	Storm #2	Storm #3
2. Frequency	yr	2		
3. Rainfall, P (24-hour)	in	1.1		
4. Initial abstraction, I_a (Use CN with table 4-1)	in	0.532		
5. Compute I_a/P		.5		
6. Unit peak discharge, q_u (Use T_c and I_a/P with exhibit 4– 11)	csm/in	545		
7. Runoff, Q (From worksheet 2) Figure 2-6	in	.10		
8. Pond and swamp adjustment factor, F_p (Use percent pond and swamp area with table 4-2. Factor is 1.0 for zero percent pond ans swamp area.)		0		
9. Peak discharge, q_p	ft³/s	.027		

(Where $q_p = q_u A_m Q F_p$)

V_r = Q * Am * 53.33 = 0.0027 AC·FT
116.15 CF

Worksheet 2: Runoff curve number and runoff

Project	By	Date
Location	Checked	Date

Check one: ☐ Present ☐ Developed Basin 2

1. Runoff curve number

Soil name and hydrologic group (appendix A)	Cover description (cover type, treatment, and hydrologic condition; percent impervious; unconnected/connected impervious area ratio)	CN[1/] Table 2-2	CN[1/] Figure 2-3	CN[1/] Figure 2-4	Area ☑ acres ☐ mi² ☐ %	Product of CN x area
B	gravel, sand, < 50% grass	79			.5052	39.91
					Totals ● .505	39.91

[1/] Use only one CN source per line

CN (weighted) = $\frac{\text{total product}}{\text{total area}} = \frac{39.91}{.505} = .79$; Use CN ➡ 79

2. Runoff

		Storm #1	Storm #2	Storm #3
Frequency	yr	2		
Rainfall, P (24-hour)	in	1.1	SEE Pg 24/32	
Runoff, Q	in	0.10		

(Use P and CN with table 2-1, figure 2-1, or equations 2-3 and 2-4)

Worksheet 3: Time of Concentration (T_c) or travel time (T_t)

Project	By	Date
Location	Checked	Date

Check one: ☐ Present ☐ Developed

Check one: ☐ T_c ☐ T_t through subarea

Notes: Space for as many as two segments per flow type can be used for each worksheet. Include a map, schematic, or description of flow segments.

Sheet flow (Applicable to T_c only)

Segment ID	1	
1. Surface description (table 3-1)	gravel/sand	
2. Manning's roughness coefficient, n (table 3-1)	.011	
3. Flow length, L (total L † 300 ft) ft	95	
4. Two-year 24-hour rainfall, P_2 in	1.1	
5. Land slope, s ft/ft	.1313	
6. $T_t = \frac{0.007\ (nL)^{0.8}}{P_2^{0.5}\ s^{0.4}}$ Compute T_t hr	.016 +	= .016

MIN. T =

Shallow concentrated flow

Segment ID		
7. Surface description (paved or unpaved)		
8. Flow length, L ft		
9. Watercourse slope, s ft/ft		
10. Average velocity, V (figure 3-1) ft/s		
11. $T_t = \frac{L}{3600\ V}$ Compute T_t hr	+	=

Channel flow

Segment ID		
12. Cross sectional flow area, a ft^2		
13. Wetted perimeter, p_w ft		
14. Hydraulic radius, $r = \frac{a}{p_w}$ Compute r ft		
15 Channel slope, s ft/ft		
16. Manning's roughness coefficient, n		
17. $V = \frac{1.49\ r^{2/3}\ s^{1/2}}{n}$ Compute V ft/s		
18. Flow length, L ft		
19. $T_t = \frac{L}{3600\ V}$ Compute T_t hr	+	=

20. Watershed or subarea T_c or T_t (add T_t in steps 6, 11, and 19) Hr .10

Worksheet 4: Graphical Peak Discharge method

Project	By	Date
Location	Checked	Date

Check one: ☐ Present ☐ Developed

1. Data

Drainage area ..... A_m = 0.0008 mi² (acres/640)

Runoff curve number ..... CN = 79 (From worksheet 2)

Time of concentration ..... T_c = .10 hr (From worksheet 3)

Rainfall distribution ..... = II (I, IA, II III)

Pond and swamp areas sprea throughout watershed ..... = 0 percent of A_m (_____ acres or mi² covered)

		Storm #1	Storm #2	Storm #3
2. Frequency	yr	2		
3. Rainfall, P (24-hour)	in	1.1		
4. Initial abstraction, I_a (Use CN with table 4-1)	in	0.532		
5. Compute I_a/P		.50		
6. Unit peak discharge, q_u (Use T_c and I_a/P with exhibit 4– _____)	csm/in	550		
7. Runoff, Q (From worksheet 2) Figure 2-6	in	.10		
8. Pond and swamp adjustment factor, F_p (Use percent pond and swamp area with table 4-2. Factor is 1.0 for zero percent pond ans swamp area.)		0		
9. Peak discharge, q_p	ft³/s	.0434		

(Where $q_p = q_u A_m Q F_p$)

V_r = 185.8 CF

Worksheet 2: Runoff curve number and runoff

Project	By	Date
Location	Checked	Date

Check one: ☐ Present ☐ Developed BASIN 3

1. Runoff curve number

Soil name and hydrologic group (appendix A)	Cover description (cover type, treatment, and hydrologic condition; percent impervious; unconnected/connected impervious area ratio)	CN[1/] Table 2-2	CN[1/] Figure 2-3	CN[1/] Figure 2-4	Area ☐ acres ☐ mi² ☐ %	Product of CN x area
B	Newly graded	91			.1687	15.35
					Totals ➡	

[1/] Use only one CN source per line

CN(weighted) = $\frac{\text{total product}}{\text{total area}}$ = _____ = _____ ; **Use CN ➡** 91

2. Runoff

		Storm #1	Storm #2	Storm #3
Frequency	yr	2		
Rainfall, P (24-hour)	in	1.1	SEE Pg 24/32	
Runoff, Q (Use P and CN with table 2-1, figure 2-1, or equations 2-3 and 2-4)	in	.43		

Worksheet 3: Time of Concentration (T_c) or travel time (T_t)

Project	By	Date
Location	Checked	Date

Check one: ☐ Present ☐ Developed

Check one: ☐ T_c ☐ T_t through subarea

Notes: Space for as many as two segments per flow type can be used for each worksheet. Include a map, schematic, or description of flow segments.

Sheet flow (Will not exceed 100 ft)

Segment ID		
1. Surface description (table 3-1)	Flat	
2. Manning's roughness coefficient, n (table 3-1)	.011	
3. Flow length, L (total L † 300 ft) ft	0	
4. Two-year 24-hour rainfall, P_2 in	1.1	
5. Land slope, s ft/ft	0	
6. $T_t = \frac{0.007\ (nL)^{0.8}}{P_2^{0.5}\ s^{0.4}}$ Compute T_t hr	0 +	= 0

T = .10

Shallow concentrated flow

Segment ID		
7. Surface description (paved or unpaved)		
8. Flow length, L ft		
9. Watercourse slope, s ft/ft		
10. Average velocity, V (figure 3-1) ft/s		
11. $T_t = \frac{L}{3600\ V}$ Compute T_t hr	+	=

Channel flow

Segment ID		
12. Cross sectional flow area, a ft^2		
13. Wetted perimeter, p_w ft		
14. Hydraulic radius, $r = \frac{a}{p_w}$ Compute r ft		
15 Channel slope, s ft/ft		
16. Manning's roughness coefficient, n		
17. $V = \frac{1.49\ r^{2/3}\ s^{1/2}}{n}$ Compute V ft/s		
18. Flow length, L ft		
19. $T_t = \frac{L}{3600\ V}$ Compute T_t hr	+	=

20. Watershed or subarea T_c or T_t (add T_t in steps 6, 11, and 19) Hr .10

MIN.

Worksheet 4: Graphical Peak Discharge method

Project	By	Date
Location	Checked	Date

Check one: ☐ Present ☐ Developed

1. Data

Drainage area ..... A_m = .0003 mi^2 (acres/640)

Runoff curve number ..... CN = 91 (From worksheet 2)

Time of concentration ..... T_c = .10 hr (From worksheet 3)

Rainfall distribution ..... = II (I, IA, II III)

Pond and swamp areas sprea
throughout watershed ..... = 0 percent of A_m (_____ acres or mi^2 covered)

		Storm #1	Storm #2	Storm #3
2. Frequency	yr	2		
3. Rainfall, P (24-hour)	in	1.1		
4. Initial abstraction, I_a (Use CN with table 4-1)	in	0.198		
5. Compute I_a/P		.225		
6. Unit peak discharge, q_u (Use T_c and I_a/P with exhibit 4– II)	csm/in	950		
7. Runoff, Q (From worksheet 2) Figure 2-6	in	.43		
8. Pond and swamp adjustment factor, F_p (Use percent pond and swamp area with table 4-2. Factor is 1.0 for zero percent pond ans swamp area.)		0		
9. Peak discharge, q_p	ft^3/s	.1226		

(Where $q_p = q_u A_m Q F_p$)

V_r = Q * Am * 53.33 = .0069 AC · FT

299.7 CF

Worksheet 2: Runoff curve number and runoff

Project	By	Date
Location	Checked	Date

Check one: ☐ Present ☐ Developed BASIN 4

1. Runoff curve number

Soil name and hydrologic group (appendix A)	Cover description (cover type, treatment, and hydrologic condition; percent impervious; unconnected/connected impervious area ratio)	CN[1/] Table 2-2	CN[1/] Figure 2-3	CN[1/] Figure 2-4	Area ☐ acres ☐ mi² ☐ %	Product of CN x area
B	Newly graded areas	91			.1018	9.26

[1/] Use only one CN source per line

Totals ➡ .102 | 9.26

$$CN(\text{weighted}) = \frac{\text{total product}}{\text{total area}} = \frac{9.26}{.102} = 91$$; Use CN ➡ 91

2. Runoff

		Storm #1	Storm #2	Storm #3
Frequency	yr	2		
Rainfall, P (24-hour)	in	1.1	SEE Pg 24/32	
Runoff, Q	in	0.4304		

(Use P and CN with table 2-1, figure 2-1, or equations 2-3 and 2-4)

S = 0.99

Project	By	Date
Location	Checked	Date

Check one: ☐ Present ☑ Developed

Check one: ☑ T_c ☐ T_t through subarea

Notes: Space for as many as two segments per flow type can be used for each worksheet.
Include a map, schematic, or description of flow segments.

3. Flow length, L (total L † 300 ft) ..... ft	0	
4. Two-year 24-hour rainfall, P_2 ..... in	1.1	
5. Land slope, s ..... ft/ft	0	
0.8		= 0

Min. T_c = 0.10

Segment ID			
7. Surface description (paved or unpaved)			
8. Flow length, L .....ft			
9. Watercourse slope, s ..... ft/ft			
10. Average velocity, V (figure 3-1) ..... ft/s			
11. T_t = L Compute T_t ..... hr		+	=

Segment ID		
12. Cross sectional flow area, a ..... ft^2		
13. Wetted perimeter, p_w ..... ft		
14. Hydraulic radius, $r = \frac{a}{p_w}$ Compute r ..... ft		
15 Channel slope, s ..... ft/ft		
16. Manning's roughness coefficient, n		
17. $V = \frac{1.49\, r^{2/3} s^{1/2}}{n}$ Compute V .....ft/s		
18. Flow length, L ..... ft		
19. T_t = L Compute T_t ..... hr		+

Worksheet 4: Graphical Peak Discharge method

Project	By	Date
Location	Checked	Date

Check one: ☐ Present ☐ Developed

1. Data

Drainage area ..... A_m = .0002 mi^2 (acres/640)

Runoff curve number ..... CN = 91 (From worksheet 2)

Time of concentration ..... T_c = .10 hr (From worksheet 3)

Rainfall distribution ..... = II (I, IA, II III)

Pond and swamp areas sprea throughout watershed ..... = 0 percent of A_m (_____ acres or mi^2 covered)

		Storm #1	Storm #2	Storm #3
2. Frequency	yr	2		
3. Rainfall, P (24-hour)	in	1.1		
4. Initial abstraction, I_a (Use CN with table 4-1)	in	0.198		
5. Compute I_a/P		.225		
6. Unit peak discharge, q_u (Use T_c and I_a/P with exhibit 4– _____)	csm/in	950		
7. Runoff, Q (From worksheet 2) Figure 2-6	in	.43		
8. Pond and swamp adjustment factor, F_p (Use percent pond and swamp area with table 4-2. Factor is 1.0 for zero percent pond ans swamp area.)		0		
9. Peak discharge, q_p	ft^3/s	.065		

(Where $q_p = q_u A_m Q F_p$)

10. Volume of Runoff V_r =

$V_r = Q \cdot A_m \cdot 53.33 = 0.0043$ AC FT

$V_r = 200$ CF

Worksheet 2: Runoff curve number and runoff

Project	By	Date
Location	Checked	Date

Check one: ☐ Present ☐ Developed BASIN 5

1. Runoff curve number

Soil name and hydrologic group (appendix A)	Cover description (cover type, treatment, and hydrologic condition; percent impervious; unconnected/connected impervious area ratio)	CN[1/] Table 2-2	CN[1/] Figure 2-3	CN[1/] Figure 2-4	Area ☑ acres ☐ mi² ☐ %	Product of CN x area
B	graded	91			.098	8.92
B	gravel /sand	79			.048	3.79
					Totals ➡ .146	12.71

[1/] Use only one CN source per line

$$CN(\text{weighted}) = \frac{\text{total product}}{\text{total area}} = \frac{12.71}{.146} = 87.05 \; ; \quad \text{Use CN} \Rightarrow \boxed{87}$$

2. Runoff

		Storm #1	Storm #2	Storm #3
Frequency	yr	2		
Rainfall, P (24-hour)	in	1.1	SEE Pg 24/32	
Runoff, Q	in	.351		

(Use P and CN with table 2-1, figure 2-1, or equations 2-3 and 2-4)

S = 1.4943

Worksheet 3: Time of Concentration (T_c) or travel time (T_t)

Project	By	Date
Location	Checked	Date

Check one: ☐ Present ☐ Developed

Check one: ☐ T_c ☐ T_t through subarea

Notes: Space for as many as two segments per flow type can be used for each worksheet. Include a map, schematic, or description of flow segments.

Segment ID			
1. Surface description (table 3-1) ..... gravel	graded -		
2. Manning's roughness coefficient, n (table 3-1)	.011		
3. Flow length, L (total L † 300 ft) ..... ft	25		
4. Two-year 24-hour rainfall, P_2 ..... in	1.1		
5. Land slope, s ..... ft/ft	.02		
6. $T_t = \frac{0.007\ (nL)^{0.8}}{P_2^{0.5}\ s^{0.4}}$ Compute T_t ..... hr	.0114	+	= .0114

min t_c = 0.10

Segment ID			
7. Surface description (paved or unpaved)			
8. Flow length, L ..... ft			
9. Watercourse slope, s ..... ft/ft			
10. Average velocity, V (figure 3-1) ..... ft/s			
11. $T_t = \frac{L}{3600\ V}$ Compute T_t ..... hr		+	=

Segment ID			
12. Cross sectional flow area, a ..... ft^2			
13. Wetted perimeter, p_w ..... ft			
14. Hydraulic radius, $r = \frac{a}{p_w}$ Compute r ..... ft			
15 Channel slope, s ..... ft/ft			
16. Manning's roughness coefficient, n			
17. $V = \frac{1.49\ r^{2/3}\ s^{1/2}}{n}$ Compute V .....ft/s			
18. Flow length, L ..... ft			
19. $T_t = \frac{L}{3600\ V}$ Compute T_t ..... hr		+	=

20. Watershed or subarea T_c or T_t (add T_t in steps 6, 11, and 19) ..... Hr 0.10

Worksheet 4: Graphical Peak Discharge method

Project	By	Date
Location	Checked	Date

Check one: ☐ Present ☑ Developed

1. Data

Drainage area ..... A_m = .000223 mi^2 (acres/640)

Runoff curve number ..... CN = 87 (From worksheet 2)

Time of concentration ..... T_c = 0.10 hr (From worksheet 3)

Rainfall distribution ..... = II (I, IA, II III)

Pond and swamp areas sprea throughout watershed ..... = 0 percent of A_m (_____ acres or mi^2 covered)

		Storm #1	Storm #2	Storm #3
2. Frequency	yr	2		
3. Rainfall, P (24-hour)	in	1.1		
4. Initial abstraction, I_a (Use CN with table 4-1)	in	.299		
5. Compute I_a/P		.30		
6. Unit peak discharge, q_u (Use T_c and I_a/P with exhibit 4– _____)	csm/in	940		
7. Runoff, Q (From worksheet 2) Figure 2-6	in	.281		
8. Pond and swamp adjustment factor, F_p (Use percent pond and swamp area with table 4-2. Factor is 1.0 for zero percent pond ans swamp area.)		0		
9. Peak discharge, q_p	ft^3/s	.06		

(Where $q_p = q_u A_m Q F_p$)

Volume of Runoff V_r

$V_r = Q. * A_m * 53.33 = .0034$ Ac. FT

$= 149$ cf

Worksheet 2: Runoff curve number and runoff

Project	By	Date
Location	Checked	Date

Check one: ☐ Present ☑ Developed BASIN 6

1. Runoff curve number

Soil name and hydrologic group (appendix A)	Cover description (cover type, treatment, and hydrologic condition; percent impervious; unconnected/connected impervious area ratio)	CN[1/] Table 2-2	CN[1/] Figure 2-3	CN[1/] Figure 2-4	Area ☑ acres ☐ mi² ☐ %	Product of CN x area
B	Newly graded	86			.683	58.759
	Paved (3055)	98			.071	6.938

[1/] Use only one CN source per line

Totals ➡ .754 | 65.677

$$CN(weighted) = \frac{total\ product}{total\ area} = \frac{65.677}{.754} = 87.105;$$

Use CN ➡ 87

2. Runoff

		Storm #1	Storm #2	Storm #3
Frequency	yr	2		
Rainfall, P (24-hour)	in	1.1	SEE Pg 24/32	
Runoff, Q (Use P and CN with table 2-1, figure 2-1, or equations 2-3 and 2-4)	in	0.28		

S = 1.4943

Worksheet 3: Time of Concentration (T_c) or travel time (T_t)

Project	By	Date
Location	Checked	Date

Segment ID	1	2
1. Surface description (table 3-1) ....gravel	graded	grade
2. Manning's roughness coefficient, n (table 3-1)	.011	.011
3. Flow length, L (total L † 300 ft) ft	120	170'
4. Two-year 24-hour rainfall, P_2 in	1.1	1.1

= .093

t_c = min

Segment ID		
7. Surface description (paved or unpaved)		
8. Flow length, L ft		
9. Watercourse slope, s ft/ft		
10. Average velocity, V (figure 3-1) ft/s		
11. $T_t = \frac{L}{\ }$ Compute T_t hr	+	=

Segment ID		
12. Cross sectional flow area, a ft^2		
13. Wetted perimeter, p_w ft		
14. Hydraulic radius, $r = \frac{a}{p_w}$ Compute r ft		
15 Channel slope, s ft/ft		
16. Manning's roughness coefficient, n		
17. $V = \frac{1.49\, r^{2/3} s^{1/2}}{n}$ Compute V ft/s		
18. Flow length, L ft		
19. $T_t = \frac{L}{3600\, V}$ Compute T_t hr	+	=

20. Watershed or subarea T_c or T_t (add T_t in steps 6, 11, and 19) Hr 0.10

Worksheet 4: Graphical Peak Discharge method

Project	By	Date
Location	Checked	Date

Check one: ☐ Present ☐ Developed

1. Data

Drainage area ..... A_m = .001067 mi^2 (acres/640)

Runoff curve number ..... CN = 87 (From worksheet 2)

Time of concentration ..... T_c = .10 hr (From worksheet 3)

Rainfall distribution ..... = II (I, IA, II III)

Pond and swamp areas sprea
throughout watershed ..... = 0 percent of A_m (_____ acres or mi^2 covered)

		Storm #1	Storm #2	Storm #3
2. Frequency	yr	2		
3. Rainfall, P (24-hour)	in	1.1		
4. Initial abstraction, I_a (Use CN with table 4-1)	in	.299		
5. Compute I_a/P		.300		
6. Unit peak discharge, q_u (Use T_c and I_a/P with exhibit 4-II)	csm/in	950		
7. Runoff, Q (From worksheet 2) Figure 2-6	in	0.28		
8. Pond and swamp adjustment factor, F_p (Use percent pond and swamp area with table 4-2. Factor is 1.0 for zero percent pond ans swamp area.)		0		
9. Peak discharge, q_p	ft^3/s	.28		

(Where $q_p = q_u A_m Q F_p$)

Volume of Runoff V_r = 0.015933 AC.FT

$V_r = Q * A_m * 53.32 = 0.015933$ AC.FT
694 CF

800.847.4843
208.334.2470

ROAD CONDITIONS:
208.336.6600 (WINTER)
208.376.8028 (BOISE)

208.239.3300 (POCATELLO)
208.239.3307 (POCATELLO)

ROAD CONSTRUCTION:
208.334.8888

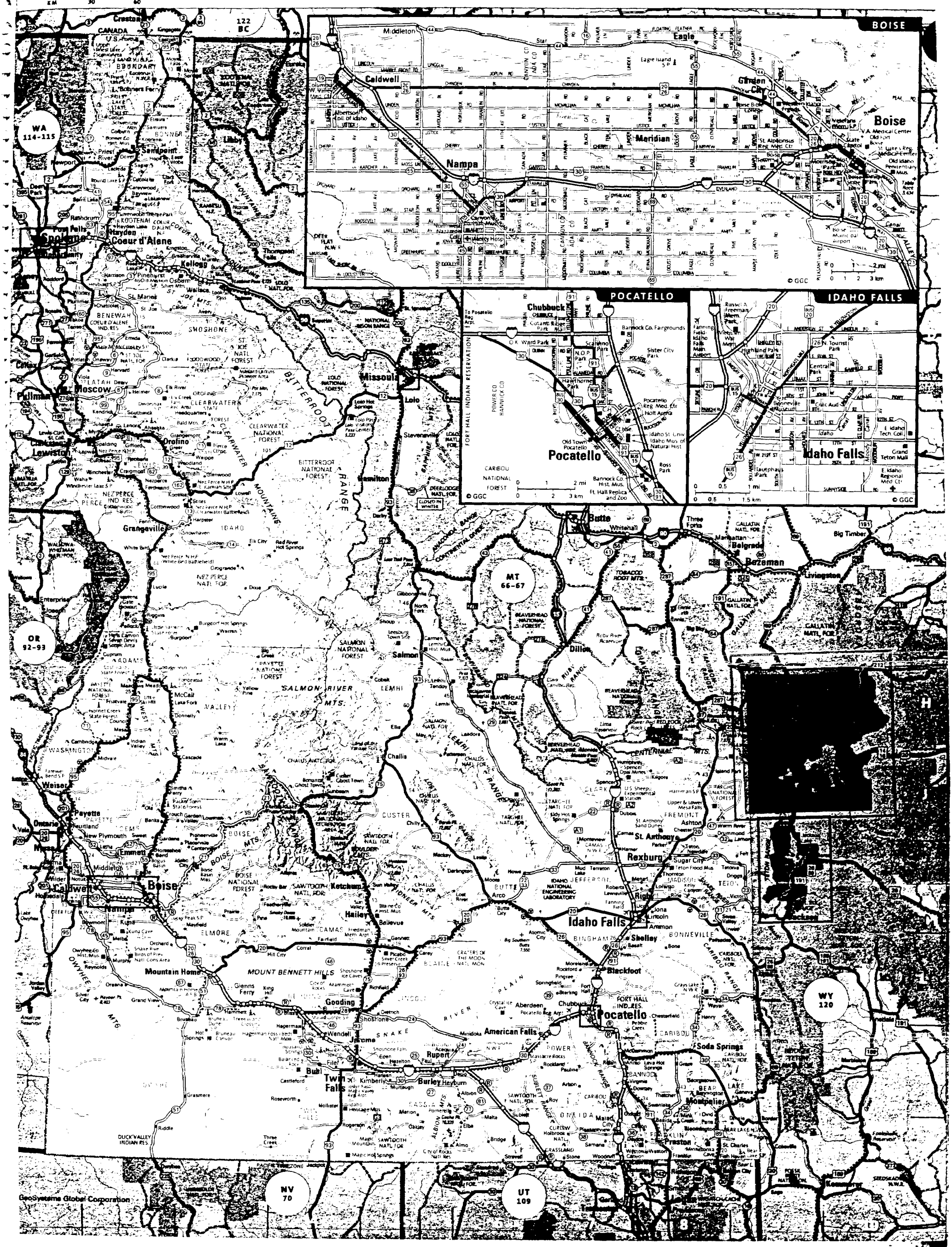
BOISE
POCATELLO
IDAHO FALLS
WA 114-115
OR 92-93
MT 66-67
WY 120
NV 70
UT 109
Spokane
Coeur d'Alene
Kellogg
Moscow
Pullman
Lewiston
Orofino
Grangeville
Missoula
Butte
Bozeman
Belgrade
Livingston
Dillon
Salmon
Challis
Boise
Nampa
Caldwell
Meridian
Eagle
Garden City
Ketchum
Sun Valley
Hailey
Mountain Home
Gooding
Twin Falls
Jerome
Wendell
Rupert
Burley
Pocatello
Chubbuck
Idaho Falls
Rexburg
St. Anthony
Ashton
Blackfoot
American Falls
Soda Springs
Montpelier
Preston
Weiser
Payette
Ontario
Emmett
Middleton
Caldwell
Nampa
Kuna
Mountain Home
Glenns Ferry
Hagerman
Bliss
Hazelton
Kimberly
Filer
Buhl
Shoshone
Gooding
Hailey
Bellevue
Stanley
Challis
Salmon
Dillon
Ashton
Rexburg
Idaho Falls
Shelley
Blackfoot
Pocatello
Chubbuck
Soda Springs
Montpelier
Preston
Malad City
Oakley
Almo
Malta
Elba
Burley
Heyburn
Rupert
Paul
Jerome
Wendell
Gooding
Shoshone
Twin Falls
Kimberly
Hazelton
Buhl
Filer
Hagerman
Bliss
Hammett
Glenns Ferry
Mountain Home
Grasmere
Riddle
Jordan Valley
Silver City
Grand View
Oreana
Reynolds
Owyhee
Bruneau
Hot Springs
Bruneau Canyon
Hagerman Fossil Beds Nat Mon
Malta
Almo
Oakley
Elba
Bridge
Strevell
Sublett
Malad City
Preston
Franklin
Weston
Oxford
Dayton
Clifton
Lava Hot Springs
Inkom
Pocatello
Chubbuck
Aberdeen
American Falls
Rockland
Pauline
Arbon
Raft River
Malta
Almo
Oakley

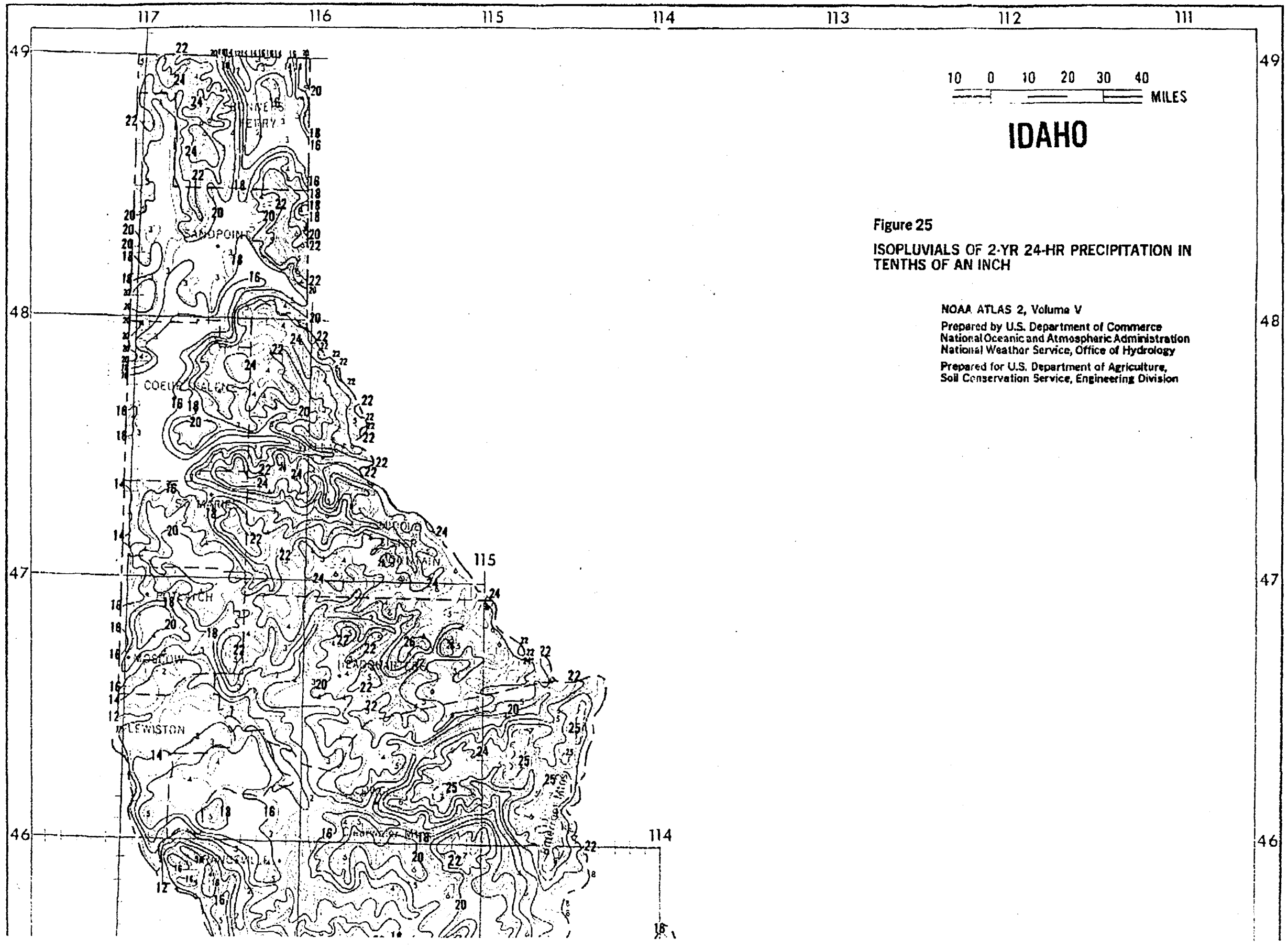

Figure 25

ISOPLUVIALS OF 2-YR 24-HR PRECIPITATION IN TENTHS OF AN INCH

NOAA ATLAS 2, Volume V

Prepared by U.S. Department of Commerce
National Oceanic and Atmospheric Administration
National Weather Service, Office of Hydrology

Prepared for U.S. Department of Agriculture,
Soil Conservation Service, Engineering Division

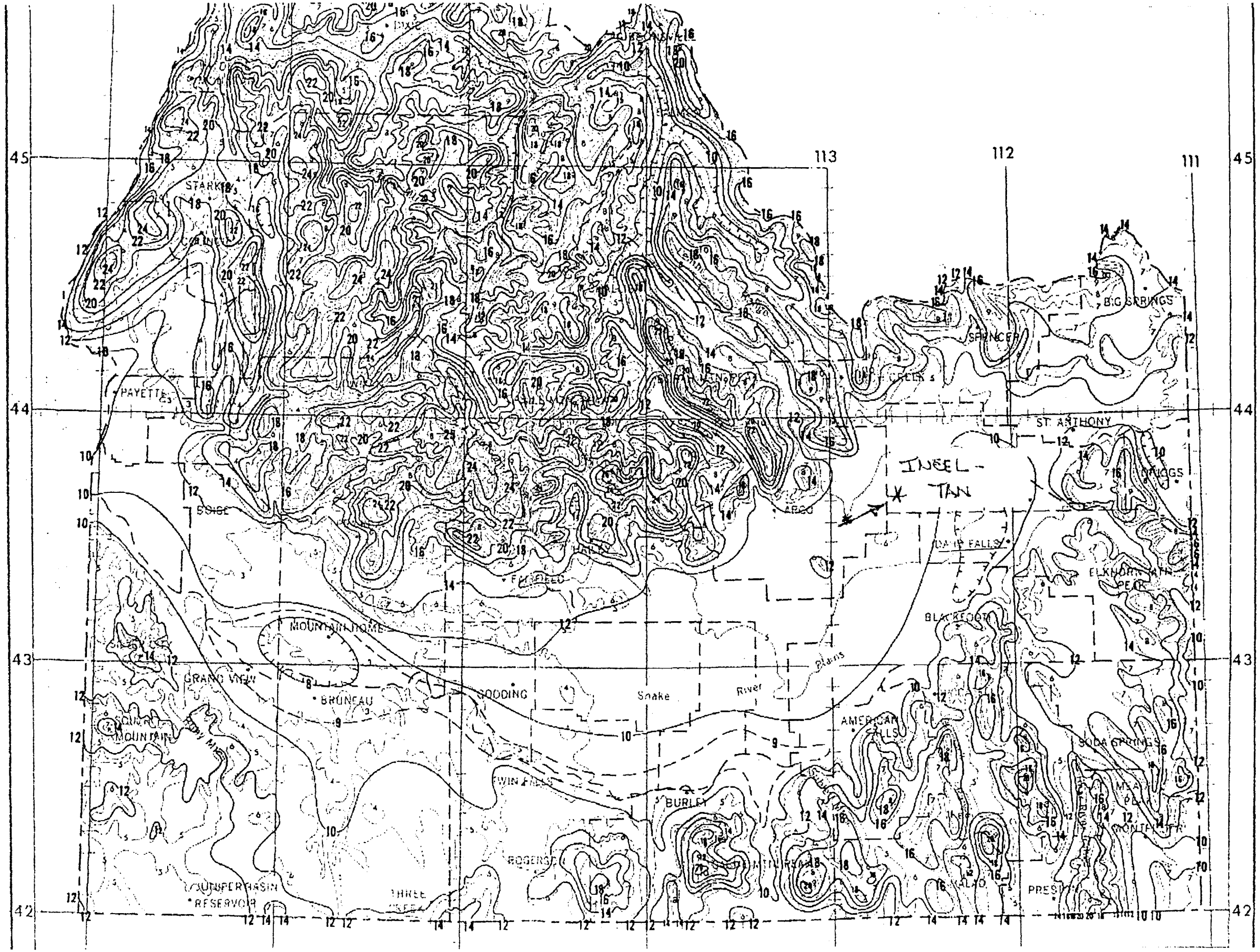
45
44
43
42
113
112
111
STARKS
PAYETTE
BOISE
MOUNTAIN HOME
GRAND VIEW
BRUNEAU
GOODING
Snake
River
Plains
TWIN FALLS
BURLEY
ROGERSON
THREE CREEK
JUNIPER BASIN
RESERVOIR
AMERICAN FALLS
BLACKFOOT
ST. ANTHONY
SPENCER
BIG SPRINGS
ARCO
DAVIS FALLS
ELKHORN PEAK
SODA SPRINGS
PRESTON
INEEL - TAN

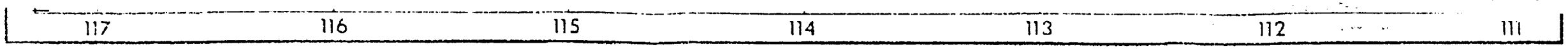
117
116
115
114
113
112
111

Exhibit 4-II Unit peal discharge (q_u) for NRCS (SCS) type II rainfall distribution

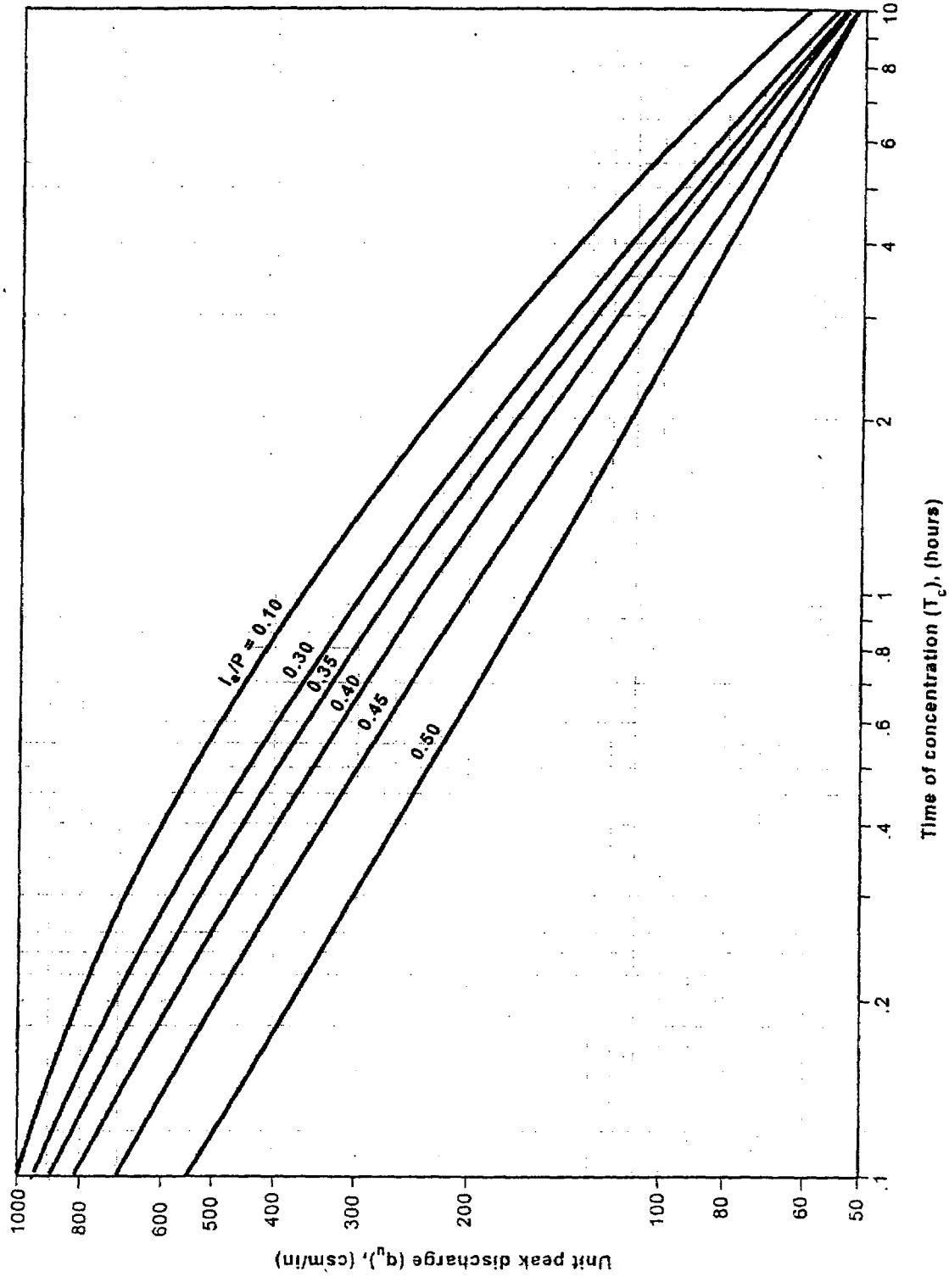

Chapter 4 Graphical Peak Discharge Method

This chapter presents the Graphical Peak Discharge method for computing peak discharge from rural and urban areas. The Graphical method was developed from hydrograph analyses using TR-20, "Computer Program for Project Formulation—Hydrology" (SCS 1983). The peak discharge equation used is:

$$q_p = q_u A_m Q F_p \qquad \text{[eq. 4-1]}$$

where:

q_p = peak discharge (ft^3/s)
q_u = unit peak discharge (csm/in)
A_m = drainage area (mi^2)
Q = runoff (in)
F_p = pond and swamp adjustment factor

The input requirements for the Graphical method are as follows: (1) T_c (hr), (2) drainage area (mi^2), (3) appropriate rainfall distribution (I, IA, II, or III), (4) 24-hour rainfall (in), and (5) *CN*. If pond and swamp areas are spread throughout the watershed and are not considered in the T_c computation, an adjustment for pond and swamp areas is also needed.

Peak discharge computation

For a selected rainfall frequency, the 24-hour rainfall (*P*) is obtained from appendix B or more detailed local precipitation maps. *CN* and total runoff (*Q*) for the watershed are computed according to the methods outlined in chapter 2. The CN is used to determine the initial abstraction (I_a) from table 4-1. I_a/P is then computed.

If the computed I_a/P ratio is outside the range in exhibit 4 (4-I, 4-IA, 4-II, and 4-III) for the rainfall distribution of interest, then the limiting value should be used. If the ratio falls between the limiting values, use linear interpolation. Figure 4-1 illustrates the sensitivity of I_a/P to *CN* and *P*.

Peak discharge per square mile per inch of runoff (*qu*) is obtained from exhibit 4-I, 4-IA, 4-II, or 4-III by using T_c (chapter 3), rainfall distribution type, and I_a/P ratio. The pond and swamp adjustment factor is obtained from table 4-2 (rounded to the nearest table value). Use worksheet 4 in appendix D to aid in computing the peak discharge using the Graphical method.

Figure 4-1 Variation of I_a/P for *P* and *CN*

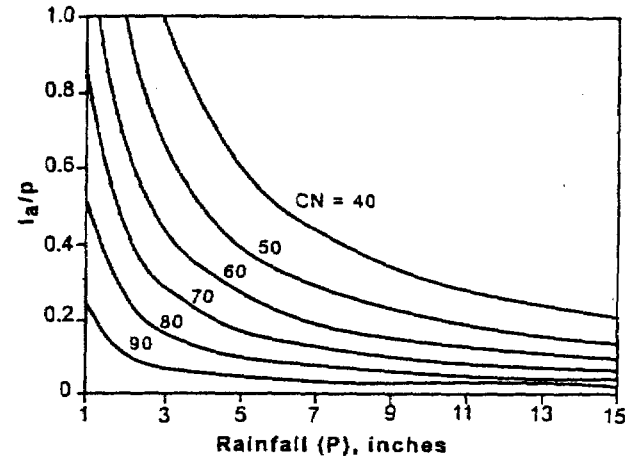

Table 4-1 I_a values for runoff curve numbers

Curve number	I_a (in)	Curve number	I_a (in)
40	3.000	70	0.857
41	2.878	71	0.857
42	2.762	72	0.817
43	2.651	73	0.778
44	2.545	74	0.703
45	2.444	75	0.667
46	2.348	76	0.632
47	2.255	77	0.597
48	2.167	78	0.564
49	2.082	79	0.532
50	2.000	80	0.500
51	1.922	81	0.469
52	1.846	82	0.439
53	1.774	83	0.410
54	1.704	84	0.381
55	1.636	85	0.353
56	1.571	86	0.326
57	1.509	87	0.299
58	1.448	88	0.273
59	1.390	89	0.247
60	1.333	90	0.222
61	1.279	91	0.198
62	1.226	92	0.174
63	1.175	93	0.151
64	1.125	94	0.128
65	1.077	95	0.105
66	1.030	96	0.083
67	0.985	97	0.062
68	0.941	98	0.041
69	0.899		

WESTON
MANAGERS DESIGNERS/CONSULTANTS

SHEET ____ of ____

CLIENT/SUBJECT _____ W.O. NO. _____

TASK DESCRIPTION _____ TASK NO. _____

PREPARED BY _____ DEPT _____ DATE _____

MATH CHECK BY _____ DEPT _____ DATE _____

METHOD REV. BY _____ DEPT _____ DATE _____

APPROVED BY _____

DEPT _____ DATE _____

Stormwater Runoff from Buildings 615, 616

Area for Building 615 = 1267 SF, 0.029 Ac, 4.545×10^{-5}

Area for Building 616 = 3956 SF, 0.091 Ac, 1.42×10^{-4}

CN = 98, impervious

$S = \frac{1000}{98} - 10 = 0.20$

Q = 0.89 in

$V_R = Q \times A_M \times 53.33$

$V_{R_{615}} = 0.00216$ Ac.FT => 93.97 CF, use 94.0 CF

$V_{R_{616}} = 0.00674$ Ac.FT => 293.59 CF, use 294 CF

Basin 1 V-Ditch
Worksheet for Triangular Channel

Project Description	
Project File	c:\haestad\fmw\vtank.fm2
Worksheet	V-ditch at East Boundary
Flow Element	Triangular Channel
Method	Manning's Formula
Solve For	Equal Side Slopes

Input Data		
Mannings Coefficient	0.022	
Channel Slope	0.010000	ft/ft
Depth	1.00	ft
Discharge	0.03	cfs

Results		
Left Side Slope	0.048049	H : V
Right Side Slope	0.048049	H : V
Flow Area	0.05	ft^2
Wetted Perimeter	2.00	ft
Top Width	0.10	ft
Critical Depth	0.46	ft
Critical Slope	0.662071	ft/ft
Velocity	0.56	ft/s
Velocity Head	0.49e-2	ft
Specific Energy	1.00	ft
Froude Number	0.14	
Flow is subcritical.		

Basin 2 V-Ditch
Worksheet for Triangular Channel

Project Description	
Project File	c:\haestad\fmw\vtank.fm2
Worksheet	V-ditch at East Boundary
Flow Element	Triangular Channel
Method	Manning's Formula
Solve For	Equal Side Slopes

Input Data		
Mannings Coefficient	0.022	
Channel Slope	0.010000	ft/ft
Depth	1.00	ft
Discharge	0.04	cfs

Results		
Left Side Slope	0.063902	H : V
Right Side Slope	0.063902	H : V
Flow Area	0.06	ft^2
Wetted Perimeter	2.00	ft
Top Width	0.13	ft
Critical Depth	0.49	ft
Critical Slope	0.441963	ft/ft
Velocity	0.68	ft/s
Velocity Head	0.01	ft
Specific Energy	1.01	ft
Froude Number	0.17	
Flow is subcritical.		

WESTON
MANAGERS DESIGNERS/CONSULTANTS

SHEET ____ of ____

CLIENT/SUBJECT _____ W.O. NO. _____

TASK DESCRIPTION _____ TASK NO. _____

PREPARED BY _____ DEPT _____ DATE _____

MATH CHECK BY _____ DEPT _____ DATE _____

METHOD REV. BY _____ DEPT _____ DATE _____

APPROVED BY _____

DEPT _____ DATE _____

Find Area.

Assume pipe designed for 100 yr /24 hr storm

$P = 2.6$

$c = 79$

$Q = 7.02$ cfs

$t_c = .10$

$$Q = \frac{(P - 0.2S)^2}{(P + 0.8S)}$$

$$S = \frac{1000}{79} = 2.66$$

$Q = 0.9045$ in

$t_c = .10$

100 yr = 5 AC

2 yr = 75 AC

$p = 1.1$

7 AC = 11 CFS

6 AC = 8 CFS

5 AC = 7 CFS

Worksneet
Worksheet for Circular Channel

Project Description	
Project File	c:\haestad\fmw\temp.fm2
Worksheet	21" pipe
Flow Element	Circular Channel
Method	Manning's Formula
Solve For	Full Flow Capacity

Input Data		
Mannings Coefficient	0.024	
Channel Slope	0.006700	ft/ft
Diameter	21.00	in

Results		
Depth	1.75	ft
Discharge	7.02	cfs
Flow Area	2.41	ft²
Wetted Perimeter	5.50	ft
Top Width	0.00	ft
Critical Depth	0.98	ft
Percent Full	100.00	
Critical Slope	0.018413	ft/ft
Velocity	2.92	ft/s
Velocity Head	0.13	ft
Specific Energy	FULL	ft
Froude Number	FULL	
Maximum Discharge	7.56	cfs
Full Flow Capacity	7.02	cfs
Full Flow Slope	0.006700	ft/ft