Appendix A

Design Drawings

INEEL
V-TANK REMEDIATION PROJECT
IDAHO FALLS, IDAHO

FINAL DESIGN

PREPARED FOR: BECHTEL BWXT IDAHO, LLC

SUBCONTRACT #K01-564442
NOVEMBER 16, 2001

SITE VICINITY MAP

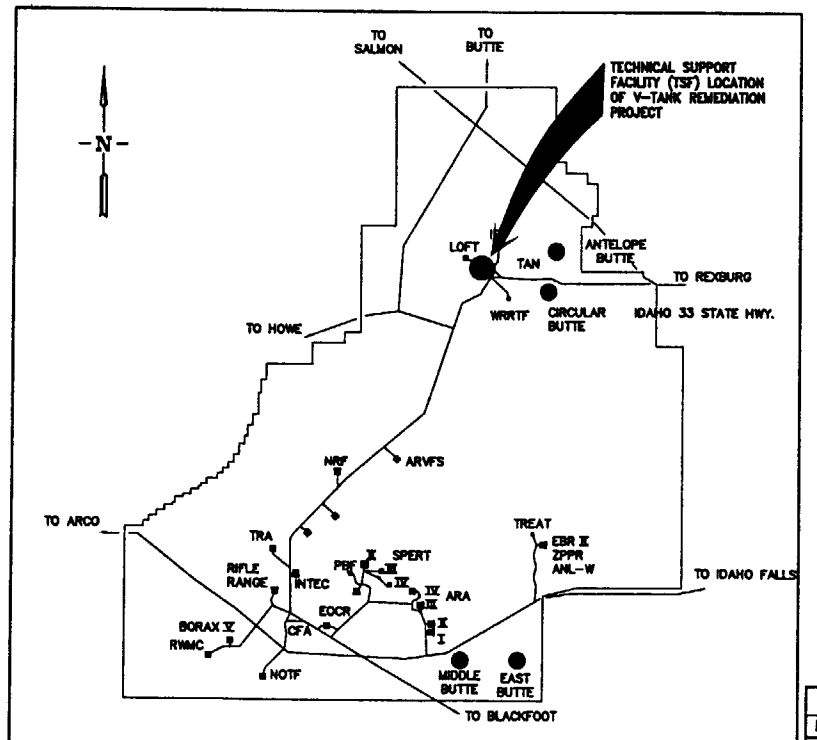

SITE MAP
SCALE: NONE

DRAWING INDEX

TITLE	DRAWING NUMBER	
Title Sheet	ABQ 00001-R00-T01	Sheet 1 of 20
General Notes, Symbols, and Abbreviations	ABQ 00002-R00-T02	Sheet 2 of 20
Site Plan	ABQ 00003-R00-C01	Sheet 3 of 20
Grading & Surface Demolition Plan	ABQ 00011-R00-C02	Sheet 4 of 20
Access Control & Site Layout Plan	ABQ 00004-R00-C03	Sheet 5 of 20
Access Control Building Plan	ABQ 00012-R00-C04	Sheet 6 of 20
Pipe Removal Plan	ABQ 00005-R00-C05	Sheet 7 of 20
V-1, V-2, V-3 & V-9 Tank Removal Plan	ABQ 00006-R00-C06	Sheet 8 of 20
Demolition & Excavation Details	ABQ 00007-R00-C07	Sheet 9 of 20
V-Tank Sludge Content Removal P & ID	ABQ 00008-R00-C08	Sheet 10 of 20
V-Tank Water Treatment P & ID Details	ABQ 00013-R00-C09	Sheet 11 of 20
V-Tank Drum Filling & Dewatering P & ID	ABQ 00014-R00-C10	Sheet 12 of 20
V-Tank Sludge Content Removal/ Water Treatment Plan	ABQ 00015-R00-C11	Sheet 13 of 20
V-Tank Sludge Content Removal/ Water Treatment Section Details	ABQ 00016-R00-C12	Sheet 14 of 20
V-Tank Sludge Content Removal/ Water Treatment Section Details	ABQ 00017-R00-C13	Sheet 15 of 20
Drum Filling & Dewatering Plan	ABQ 00018-R00-C14	Sheet 16 of 20
Drum Filling & Dewatering Section Details	ABQ 00020-R00-C15	Sheet 17 of 20
Backup Water Treatment Plan and Section Details	ABQ 00019-R00-C16	Sheet 18 of 20
Site Restoration Plan	ABQ 00009-R00-C17	Sheet 19 of 20
Miscellaneous Details	ABQ 00010-R00-C18	Sheet 20 of 20

50% REDUCTION

REGISTERED PROFESSIONAL ENGINEER 4596 STATE OF IDAHO BERG KESHIAN JR 11/16/01

Revisions						
Rev. No.:	Date:	Descriptions:	Drawn By:	Checked By:	Project A/E:	Approval:

		Date
Designed by:	R. Ederer	11/16/01
Drawn by:	JMM/KDF	11/16/01
Checked by:	D.Brennecke	11/16/01
Project Manager:	B. Keshian	11/16/01
Client Approval:		

WESTON
6501 AMERICAS PARKWAY
SUITE 800
ALBUQUERQUE, NM 87110
(505) 884-5050

V-TANK REMEDIATION PROJECT
IDAHO FALLS, IDAHO

TITLE SHEET

DRAWING NO.: ABQ 00001-R00-T01
PROJECT NO.: 12393.002.001
SHEET # 1 OF 20

ABQ00001_R00_T01.DWG.KDF 11-16-01

LINETYPE LEGEND

-E-T-CTV-?-	EXISTING ELECTRICAL/TELEPHONE/CABLE TELEVISION/UNKNOWN (BURIED)
-SS-D-W-IW-G-	SANITARY SEWER/DRAIN/ WATER/IRRIGATION WATER/GAS (BURIED)
	NEW CULVERT
	EXISTING CULVERT
	OVERHEAD ELECTRIC/TELEPHONE
	4' HIGH ACCESS CONTROL FENCE
	TEMPORARY 6' CHAIN LINK ACCESS CONTROL FENCE
	DRAINAGE DITCH
	EDGE OF EXISTING ASPHALT
	GRADE BREAK LINES
	ACCESS ROUTE LINE
	PIPING TO BE REMOVED
	LIMITS OF EXCAVATION SHIELDING
	ROOF LINES

PLAN VIEW

	UTILITY POLE
N 1,085,156 / E 452,599	SURVEY COORDINATE
	SLOPE/FLOW ARROW
	TOP OF SLOPE
	SURVEY CONTROL POINT
WELL-1	WELL
FH	FIRE HYDRANT
	EXISTING CONCRETE
	NEW GRAVEL SURFACE

DRAWING LEGEND

5210	EXISTING CONTOUR
	INTERMEDIATE CONTOUR
	PROPOSED CONTOUR
	SPOT ELEVATIONS
	BUILDING/STRUCTURE
	V-DITCH

SECTION

	COMMON BORROW
	TOPSOIL
	UNDISTURBED SOIL
	AGGREGATE BASE
	GRAVEL OR DRAIN ROCK
	CONCRETE
	WATER LEVEL
	TRENCH SHIELD

ABBREVIATIONS

AOC	AREA OF CONTAMINATION	NA	NOT APPLICABLE
℄	CENTER LINE	NIC	NOT IN CONTRACT
CONC.	CONCRETE	NTS	NOT TO SCALE
CMP	CORRUGATED METAL PIPE	OC	ON CENTER
D&D	DEMOLITION & DECONDITIONING	PL	PROPERTY LINE
DIA. OR ø	DIAMETER	PP	POWER POLE
E	EASTING	PVC	POLYVINYL CHLORIDE
ELEC	ELECTRIC	SAN	SANITARY SEWER
ELEV	ELEVATION	SHT.	SHEET
EXIST	EXISTING	SSD	SANITARY SEWER-CONCRETE
FL	FLOW LINE	SF	SQUARE FEET
HASP	HEALTH & SAFETY PLAN	TYP	TYPICAL
HDA	HOT DRAIN-STAINLESS STEEL	UG	UNDERGROUND
HDPE	HIGH DENSITY POLYETHYLENE	UST	UNDERGROUND STORAGE TANK
HIC	HIGH INTEGRITY CONTAINER	VCO	VOLUNTARY CONSENT ORDER
INV	INVERT	VOC	VOLATILE ORGANIC COMPOUNDS
IW	IRRIGATION WATER	W	WATER
LF	LINEAR FOOT	WAC	WASTE ACCEPTANCE CRITERIA
MH	MANHOLE	WDA	WARM DRAIN-STAINLESS STEEL
MIN	MINIMUM	WDC	WARM DRAIN-CAST IRON
MW	MONITORING WELL	WL	WATER LEVEL
MTL	METAL	N	NORTHING

GENERAL NOTES

1. TAN TANK V-TANK AREA TOPOGRAPHIC SURVEY SURVEYED BY SUTHERLIN & GRADY. DATUM: NAD-27 STATE PLANE AND 1929 VERTICAL. SURVEY DATE: 04/19/01.
2. THE FOLLOWING IS THE LIST DRAWINGS PROVIDED BY INEEL AND USED BY WESTON TO IDENTIFY AND LOCATE UTILITIES SHOWN ON THESE CONSTRUCTION DRAWINGS.

TITLE	INEEL DRAWING NO.	DATE
TAN RADIOACTIVE LIQUID WASTE UNDERGROUND PIPING 607 AREA	422643	3-88
TAN/TSF AREA FIRE WATER & UTILITY WATER SITE PLAN	423185	12-15-88
TAN RADIOACTIVE LIQUID WASTE UNDERGROUND PIPING PLAN	422642	3-88
TFS AREA WASTE LINE IDENTIFICATION	154298	11-15-71
ANP LIQUID WASTE TREATMENT PLANT BLDG. 616, PLANS, ELEVATIONS SECTIONS & DETAILS	106889	12-20-52
ANP ASSEMBLY & MAINTENANCE AREA LIQUID WASTE TREATMENT PLANT 616 PIPING PLAN	106892	12-20-52
ANP ASSEMBLY & MAINTENANCE AREA LIQUID WASTE TREATMENT PLANT 616 VESSEL DETAILS & ORIENTATIONS	106894	12-20-52
ANP ASSEMBLY & MAINTENANCE AREA LIQUID WASTE TREATMENT PLANT 616 PIPING SECTIONS	106893	12-20-52
TAN RADIOACTIVE LIQUID WASTE STORAGE AND TRANSFER SYSTEM	138651	11-3-82

3. ALL ACTIVE UNDERGROUND PIPING AND UTILITIES SHALL BE LOCATED AND DE-ENERGIZED PRIOR TO CONSTRUCTION BY ELECTRONIC LOCATING DEVICES OR EXPLORATORY EXCAVATIONS.
4. STORM WATER CONTROLS SHALL BE IN PLACE PRIOR TO START OF EXCAVATION WORK.

SECTION AND DETAIL SYMBOL

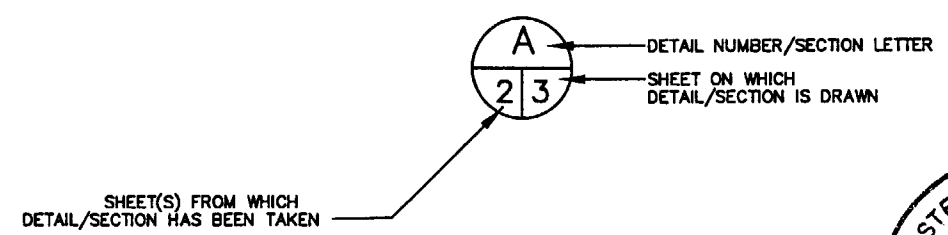

LINE IDENTIFICATION

HD – HOT DRAIN
WD – WARM DRAIN
SW – SERVICE WASTE (COLD DRAIN)
SS – SANITARY SEWER

REGISTERED PROFESSIONAL ENGINEER 4596 STATE OF IDAHO
11/16/01

50% REDUCTION

Revisions						
Rev. No.:	Date:	Descriptions:	Drawn By:	Checked By:	Project A/E:	Approval:

		Date
Designed by:	R. Ederer	11/16/01
Drawn by:	JMM/KDF	11/16/01
Checked by:	D.Brennecke	11/16/01
Project Manager:	B. Keshlan	11/16/01
Client Approval:		

WESTON
6501 AMERICAS PARKWAY
SUITE 800
ALBUQUERQUE, NM 87110
(505) 884-5050

V-TANK REMEDIATION PROJECT
IDAHO FALLS, IDAHO

GENERAL NOTES.
SYMBOLS, AND ABBREVIATIONS

DRAWING NO.: ABQ 00002-R00-T02
PROJECT NO.: 12393.002.001
SHEET # 2 OF 20

ABQ00002_R00_T02.DWG.KDF 11-16-01

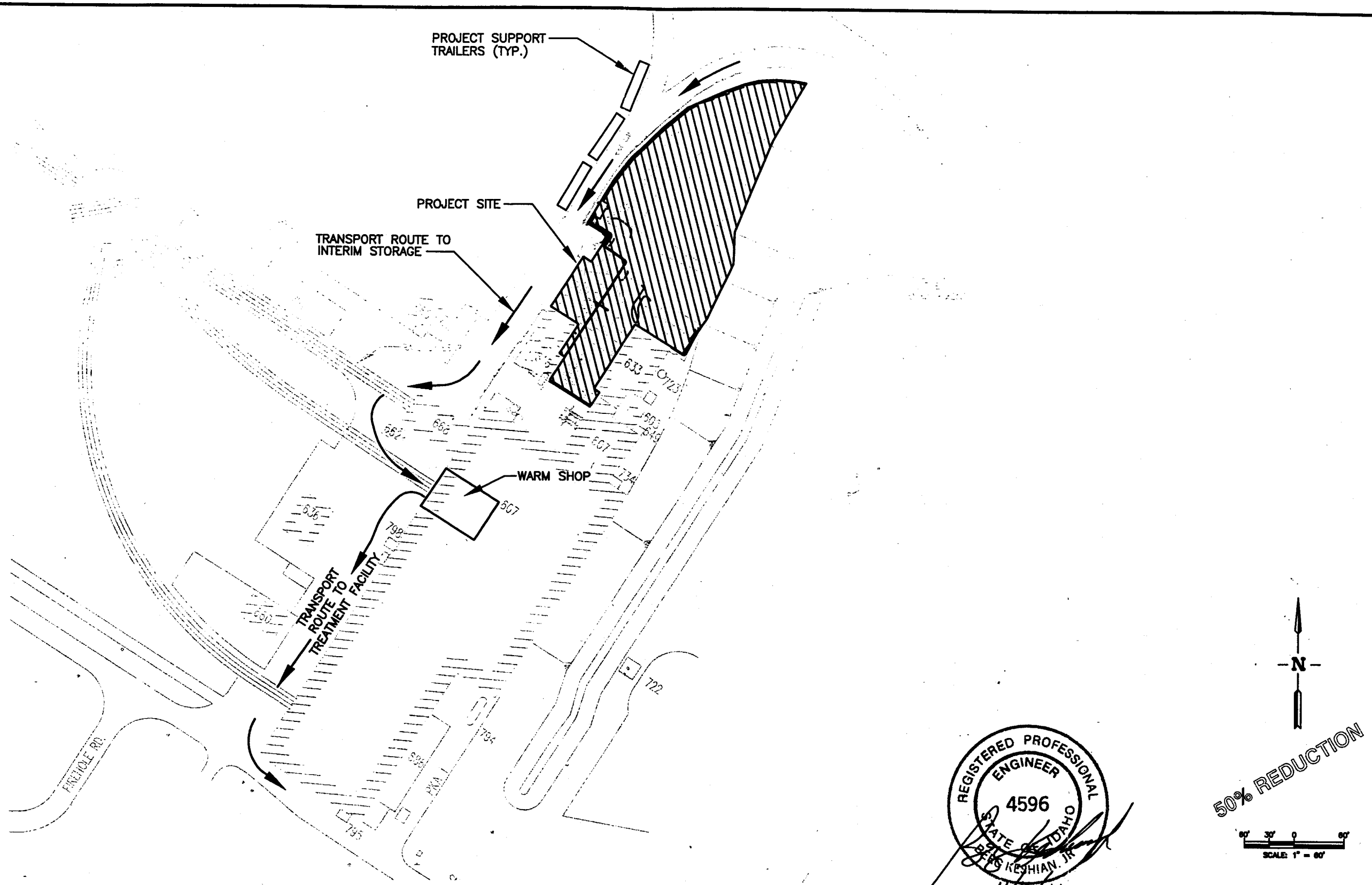

Revisions						
Rev. No.:	Date:	Descriptions:	Drawn By:	Checked By:	Project A/E:	Approval:

		Date
Designed by:	R. Ederer	11/16/01
Drawn by:	JMM/KDF	11/16/01
Checked by:	D.Brennecke	11/16/01
Project Manager:	B. Keshian	11/16/01
Client Approval:		

WESTON
MANAGERS DESIGNERS/CONSULTANTS
6501 AMERICAS PARKWAY
SUITE 800
ALBUQUERQUE, NM 87110
(505) 884-5050

V-TANK REMEDIATION PROJECT
IDAHO FALLS, IDAHO

SITE PLAN

DRAWING NO.: ABQ 00003-R00-C01
PROJECT NO.: 12393.002.001
SHEET # 3 OF 20

ABQ00003_R00_C01.DWG.KDF 11-16-01

1/4/4 BERM DETAIL

2/4/4 V-DITCH DETAIL

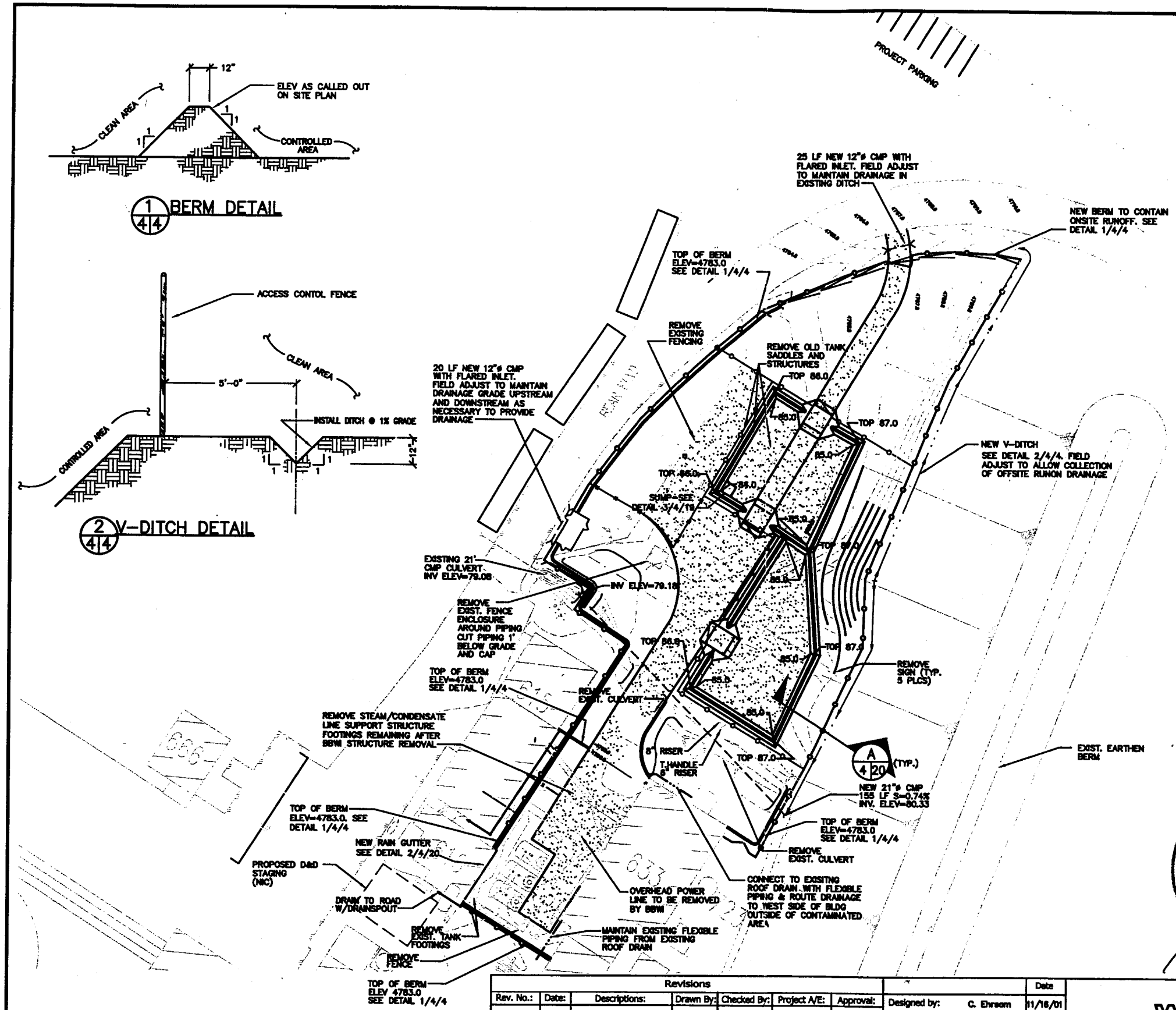

REGISTERED PROFESSIONAL ENGINEER 4596 STATE OF IDAHO

11/16/01

CONSTRUCTION NOTES:

1. OVERHEAD STEAM/CONDENSATION AND POWER LINES AND SUPPORT STRUCTURES ARE TO BE REMOVED BY BBWI PRIOR TO START OF WORK.
2. MINIMUM ONE FOOT (1') OF COVER IS REQUIRED OVER ALL NEW CMP CULVERTS.
3. PLACE ACCESS CONTROL FENCE AND "T" POSTS AROUND 8" RISER AND T-HANDLE 6" RISER TO PROTECT FROM EQUIPMENT DAMAGE. MAINTAIN 3' CLEAR SPACE BETWEEN FENCE AND RISERS.
4. PROVIDE GENERAL GRADING AS NECESSARY TO ALLOW FOR ADEQUATE WORKING SURFACES. ALL GRADING SHALL OCCUR IN A MANNER THAT DOES NOT ALLOW DRAINAGE TO RUN OFF BEYOND THE PROJECT BOUNDARIES.
5. SPOT ELEVATIONS SHOWN ON SITE PLAN REPRESENT FINISHED GRADES.
6. BENCHMARK FOR SURVEY CONTROL WILL BE ESTABLISHED BY INEEL PERSONNEL.

Revisions

Rev. No.:	Date:	Descriptions:	Drawn By:	Checked By:	Project A/E:	Approval:

		Date
Designed by:	C. Ehrsam	11/16/01
Drawn by:	JMM/KDF	11/16/01
Checked by:	D.Brennecke	11/16/01
Project Manager:	B. Keshlan	11/16/01
Client Approval:		

WESTON
ARCHITECTS DESIGNERS/CONSULTANTS
6501 AMERICAS PARKWAY
SUITE 800
ALBUQUERQUE, NM 87110
(505) 884-5050

V-TANK REMEDIATION PROJECT
IDAHO FALLS, IDAHO

GRADING AND SURFACE DEMOLITION PLAN

DRAWING NO.: ABQ 00011-R00-C02
PROJECT NO.: 12393.002.001
SHEET # 4 OF 20

ABQ00011_R00_C02.DWG.KDF 11-16-01

NOTE:

1. SHIELDING SHALL BE PLACED AROUND PERIMETER OF DRUM STORAGE/WATER STORAGE/DECONTAMINATION AREA AS REQUIRED TO CONTROL RADIATION DOSE EXPOSURE.
2. ALL DIMENSIONS SHOWN ON DRAWING SHALL BE INSTALLED WITHIN ± 1 FOOT.

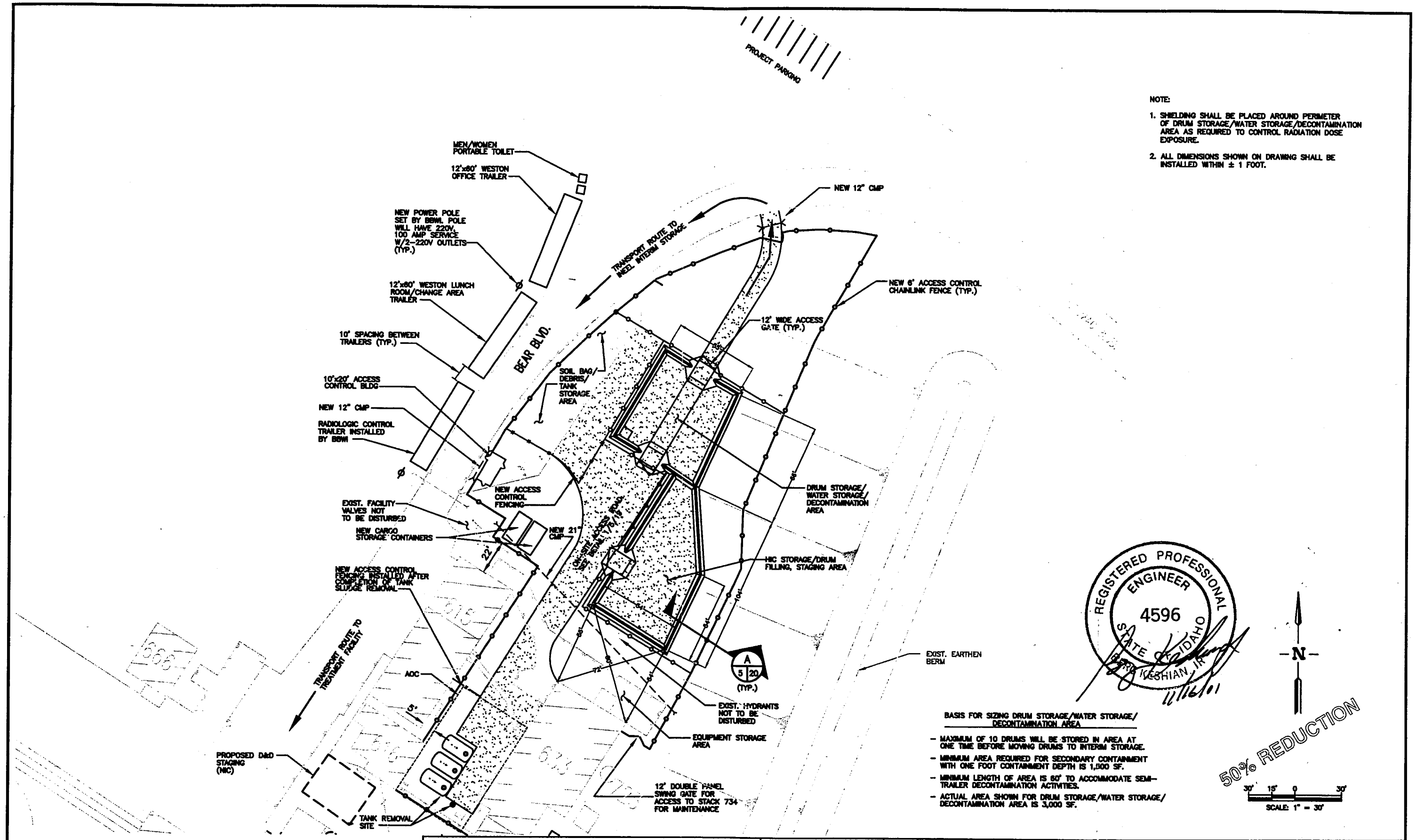

REGISTERED PROFESSIONAL ENGINEER 4596 STATE OF IDAHO BARRY KESHIAN, JR. 11/16/01

BASIS FOR SIZING DRUM STORAGE/WATER STORAGE/ DECONTAMINATION AREA

- MAXIMUM OF 10 DRUMS WILL BE STORED IN AREA AT ONE TIME BEFORE MOVING DRUMS TO INTERIM STORAGE.
- MINIMUM AREA REQUIRED FOR SECONDARY CONTAINMENT WITH ONE FOOT CONTAINMENT DEPTH IS 1,500 SF.
- MINIMUM LENGTH OF AREA IS 60' TO ACCOMMODATE SEMI-TRAILER DECONTAMINATION ACTIVITIES.
- ACTUAL AREA SHOWN FOR DRUM STORAGE/WATER STORAGE/ DECONTAMINATION AREA IS 3,000 SF.

Revisions						
Rev. No.:	Date:	Descriptions:	Drawn By:	Checked By:	Project A/E:	Approval:

		Date
Designed by:	R. Ederer	11/16/01
Drawn by:	JMM/KDF	11/16/01
Checked by:	D.Brennecke	11/16/01
Project Manager:	B. Keshian	11/16/01
Client Approval:		

WESTON
ENGINEERS/DESIGNERS/CONSULTANTS
6501 AMERICAS PARKWAY
SUITE 800
ALBUQUERQUE, NM 87110
(505) 884-5050

V-TANK REMEDIATION PROJECT
IDAHO FALLS, IDAHO

ACCESS CONTROL & SITE LAYOUT PLAN

DRAWING NO.: ABQ 00004-R00-C03
PROJECT NO.: 12393.002.001
SHEET # 5 OF 20

ABQ00004_R00_C03.DWG.KDF 11-16-01

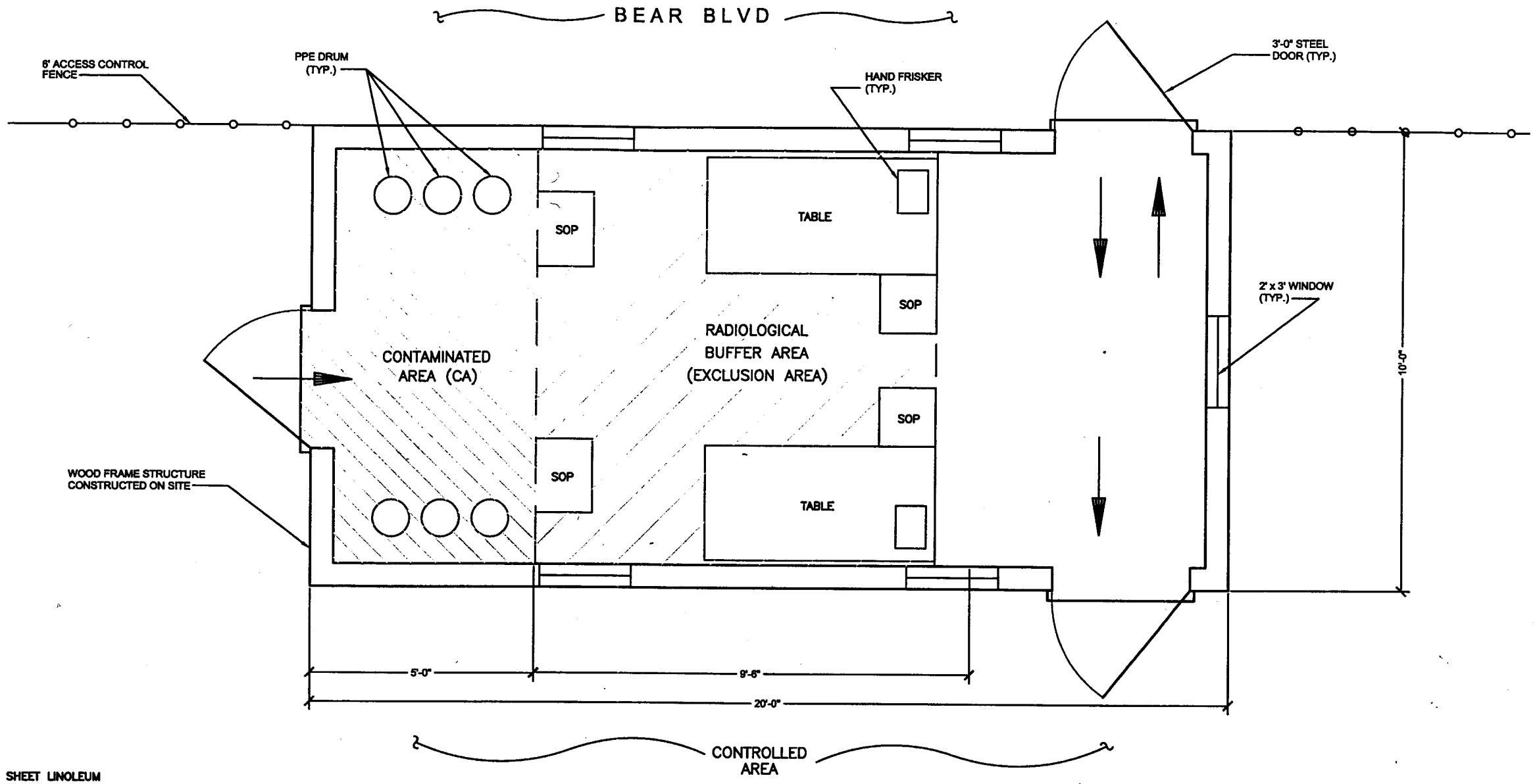

ACCESS CONTROL BUILDING PLAN

SCALE: 3/4"=1'-0"

NOTE:

1. FLOOR COVERING WILL BE SHEET LINOLEUM
2. BLDG WILL REQUIRE 110V POWER FOR INTERIOR LIGHTING & MISC. POWER REQUIREMENTS.

LEGEND:

SOP	STEP OFF PAD
CA	CONTAMINATION AREA
RBA	RADIOLOGICAL BUFFER AREA
PPE	PERSONNEL PROTECTIVE EQUIPMENT

REGISTERED PROFESSIONAL ENGINEER 4596 STATE OF IDAHO BEG KESHIAN, JR. 11/16/01

50% REDUCTION

Revisions						
Rev. No.:	Date:	Descriptions:	Drawn By:	Checked By:	Project A/E:	Approval:

		Date
Designed by:	R. Ederer	11/16/01
Drawn by:	JMM/KDF	11/16/01
Checked by:	D.Brennecke	11/16/01
Project Manager:	B. Keshian	11/16/01
Client Approval:		

WESTON
MANAGERS DESIGNERS/CONSULTANTS
6501 AMERICAS PARKWAY
SUITE 800
ALBUQUERQUE, NM 87110
(505) 884-5050

V-TANK REMEDIATION PROJECT
IDAHO FALLS, IDAHO

ACCESS CONTROL BUILDING PLAN

DRAWING NO.: ABQ 00012-R00-C04
PROJECT NO.: 12393.002.001
SHEET # 6 OF 20

ABQ00012_R00_C04.DWG.KDF 11-16-01

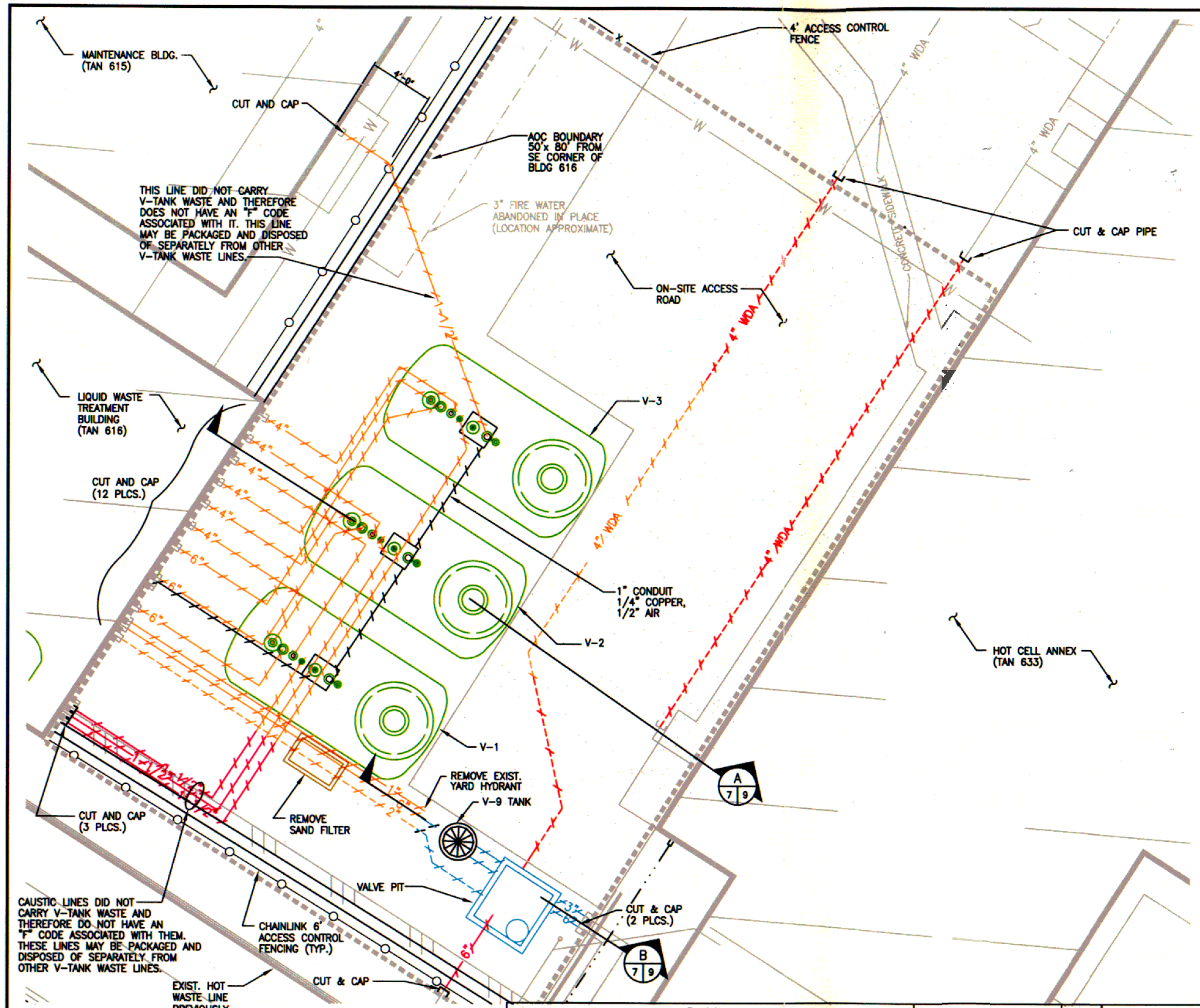

NOTES

1. ALL PIPING AND TANKS SHALL BE REMOVED IN THE ORDER INDICATED IN THE MANDATORY REMOVAL SEQUENCE LEGEND. REMOVAL OF SUBSEQUENT ITEMS SHALL NOT COMMENCE UNTIL THE PRECEEDING REMOVAL ITEMS ARE 100% COMPLETE.
2. VOLUNTARY CONSENT ORDER PIPING SHALL BE PACKAGED SEPARATELY AND GIVEN TO BBWI FOR SUBSEQUENT TRANSFER TO THE INEEL VCO PROGRAM.
3. HAZARDOUS CONSTITUENTS DECONTAMINATION SHALL BE CONDUCTED ON ALL EQUIPMENT AND PERSONNEL TO REMOVE ALL VISIBLE CONTAMINATION BEFORE EXITING THE NORTH END OF AREA OF CONTAMINATION (AOC).
4. PIPES TO BE CUT AND CAPPED AT THE LIMITS OF THE AOC BOUNDARY SHALL BE CUT & CAPPED WITHIN 5' BEYOND THE AOC BOUNDARY.

MANDATORY REMOVAL SEQUENCE LEGEND

1. SAND FILTER REMOVAL
2. PIPING REMOVAL
3. V-3, V-2, V-1 TANK REMOVAL IN RESPECTIVE ORDER.
4. PIPING REMOVAL
5. V-9 TANK AND VALVE PIT REMOVAL
6. PIPING REMOVAL

VOLUNTARY CONSENT ORDER PIPING (ALL COLORS)

NON-VCO PIPING TO BE REMOVED

REGISTERED PROFESSIONAL ENGINEER 4596 STATE OF IDAHO BERG KESHIAN JR

N

50% REDUCTION

5' 2.5' 0 5'
SCALE: 1" = 5'

Revisions						
Rev. No.:	Date:	Descriptions:	Drawn By:	Checked By:	Project A/E:	Approval:

		Date
Designed by:	R. Ederer	11/16/01
Drawn by:	JMM/KDF	11/16/01
Checked by:	D.Brennecke	11/16/01
Project Manager:	B. Keshian	11/16/01
Client Approval:		

WESTON
MANAGERS DESIGNERS/CONSULTANTS
6501 AMERICAS PARKWAY
SUITE 800
ALBUQUERQUE, NM 87110
(505) 884-5050

V-TANK REMEDIATION PROJECT
IDAHO FALLS, IDAHO

PIPE REMOVAL PLAN

DRAWING NO.: ABQ 00005-R00-C05
PROJECT NO.: 12393.002.001
SHEET # 7 OF 20

ABQ00005_R00_C05.DWG.KDF 11-16-01

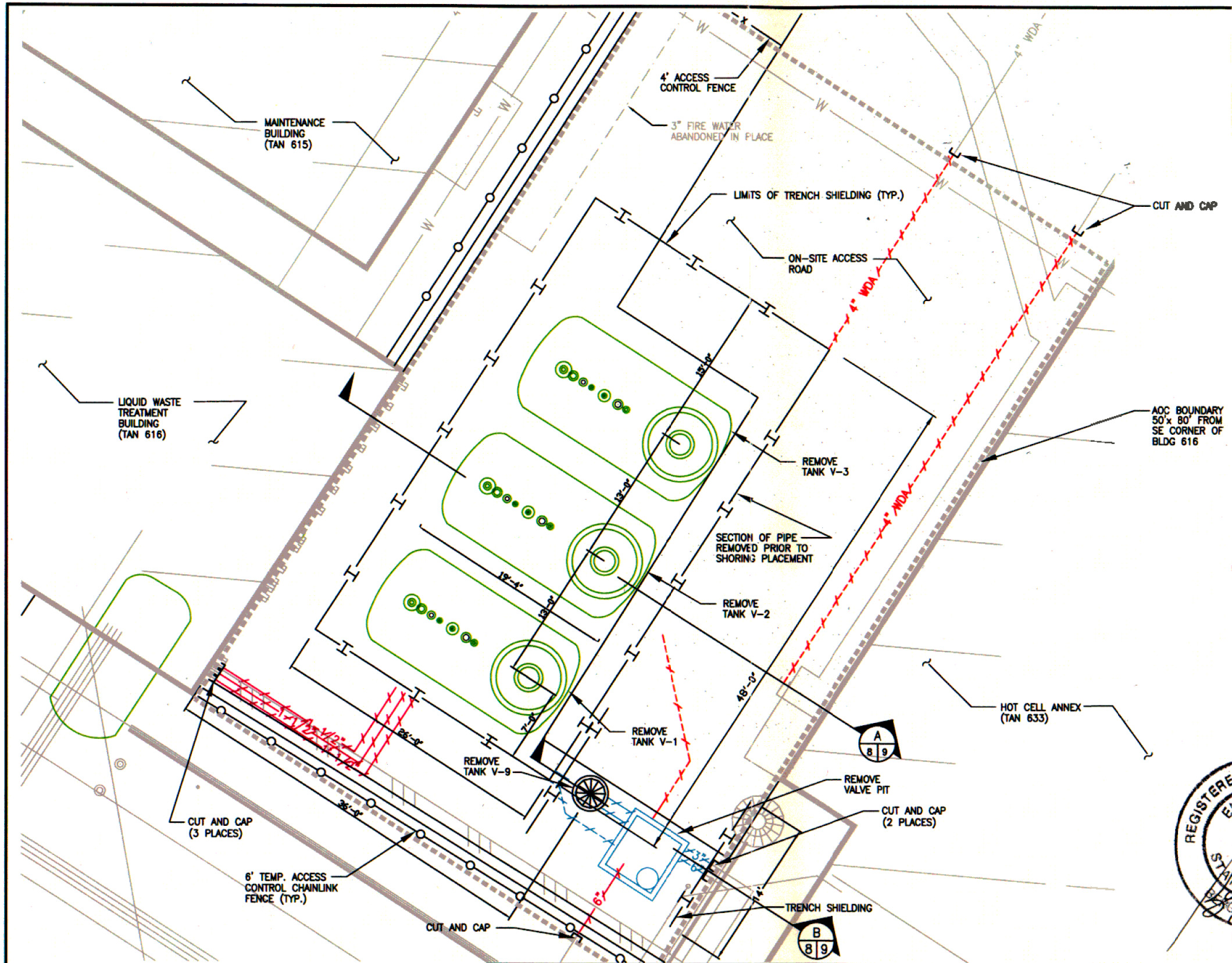

NOTES

1. PIPING REMOVED AS PART OF THE PIPE REMOVAL PLAN IS NOT SHOWN ON THIS DRAWING (SEE SHEET 7 OF 19).
2. ALL PIPING AND TANKS SHALL BE REMOVED IN THE ORDER INDICATED IN THE MANDATORY REMOVAL SEQUENCE LEGEND. REMOVAL OF SUBSEQUENT ITEMS SHALL NOT COMMENCE UNTIL THE PRECEEDING REMOVAL ITEMS ARE 100% COMPLETE.
3. VOLUNTARY CONSENT ORDER PIPING SHALL BE PACKAGED SEPARATELY AND GIVEN TO BBWI FOR SUBSEQUENT TRANSFER TO THE INEEL VCO PROGRAM.
4. HAZARDOUS CONSTITUENTS DECONTAMINATION SHALL BE CONDUCTED ON ALL EQUIPMENT AND PERSONNEL TO REMOVE ALL VISIBLE CONTAMINATION BEFORE EXITING THE NORTH END OF AREA OF CONTAMINATION (AOC).
5. PIPES TO BE CUT & CAPPED AT THE LIMITS OF THE AOC BOUNDARY SHALL BE CUT & CAPPED WITHIN 5' BEYOND THE AOC BOUNDARY.

MANDATORY REMOVAL SEQUENCE LEGEND

1. SAND FILTER REMOVAL
2. PIPING REMOVAL
3. V-3, V-2, V-1 TANK REMOVAL IN RESPECTIVE ORDER.
4. PIPING REMOVAL
5. V-9 TANK AND VALVE PIT REMOVAL
6. PIPING REMOVAL

VOLUNTARY CONSENT ORDER PIPING (ALL COLORS)

NON-VCO PIPING TO BE REMOVED

REGISTERED PROFESSIONAL ENGINEER 4596 STATE OF IDAHO BERG KESHIAN, JR. 11/16/01

N

50% REDUCTION

5' 2.5' 0 5'
SCALE: 1" = 5'

Revisions						
Rev. No.:	Date:	Descriptions:	Drawn By:	Checked By:	Project A/E:	Approval:

		Date
Designed by:	R. Ederer	11/16/01
Drawn by:	JMM/KDF	11/16/01
Checked by:	D.Brennecke	11/16/01
Project Manager:	B. Keshian	11/16/01
Client Approval:		

WESTON
6501 AMERICAS PARKWAY
SUITE 800
ALBUQUERQUE, NM 87110
(505) 884-5050

V-TANK REMEDIATION PROJECT
IDAHO FALLS, IDAHO

V-1, V-2, V-3, & V-9 TANK REMOVAL PLAN

DRAWING NO.: ABQ 00006-R00-C06
PROJECT NO.: 12393.002.001
SHEET # 8 OF 20

ABQ00006_R00_C06.DWG.KDF 11-16-01

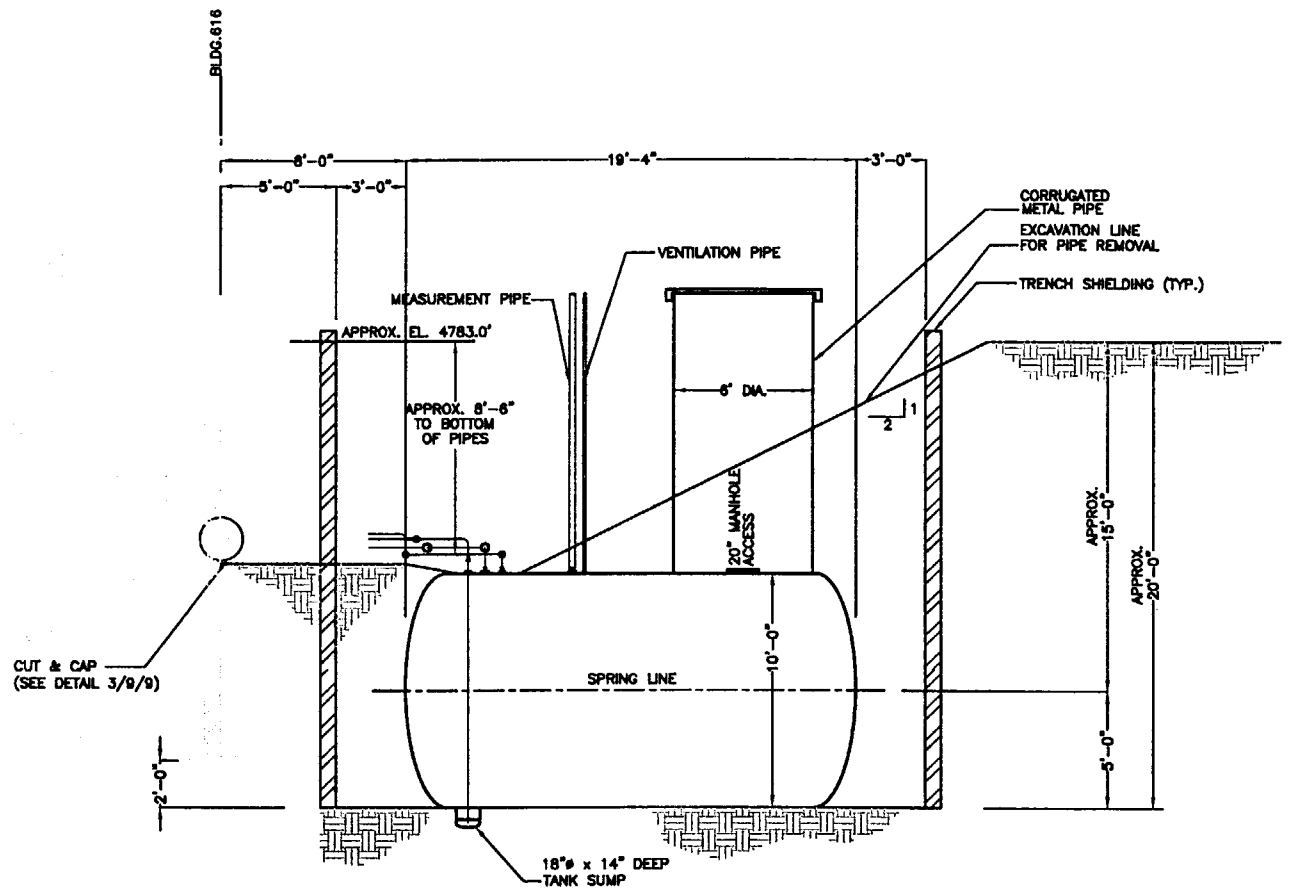

A/9 TYP 10,000 GAL TANK & PIPING REMOVAL SECTION

7,8

4' 2' 0 4'

SCALE: 1/4"=1'-0"

NOTE:

1. DIMENSIONS OF EXISTING STRUCTURES, PIPING, AND TANK ARE APPROXIMATE. THESE FEATURES SHALL BE VERIFIED BY EXPLORATORY EXCAVATION. LOCKOUT AND TAG ALL ISOLATION VALVES.
2. PIPING AND TANKS ARE ASSUMED TO BE STAINLESS STEEL. BASED ON AVAILABLE AS-BUILT INFORMATION
3. VERIFY ELECTICAL SUPPLY LOCATION. LOCKOUT AND TAG. PER SITE HASP.
4. ALL PIPE WILL BE EXPOSED AND CUT TO APPROPRIATE LENGTHS.
5. DEPTH OF BUILDING 616 FOOTING IS ESTIMATED. IF EXCAVATION IS REQUIRED OUTSIDE OF TRENCH SHIELDING AND ADJACENT TO BLDG 616, ACTUAL DEPTH OF FOOTING SHALL BE FIELD VERIFIED.

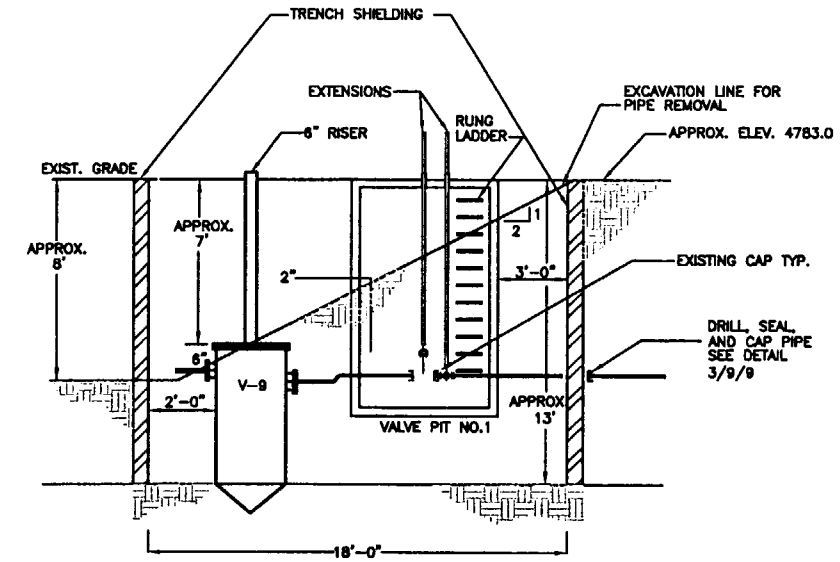

B/9 TANK V-9 EXCAVATION SECTION

7,8

4' 2' 0 4'

SCALE: 1/4"=1'-0"

NOTE:

1. VALVE PIT AND PIPING WITHIN VALVE PIT ARE PART OF A VCO PROGRAM. SEE SHEET 7/19 FOR PIPING OUTSIDE OF VALVE PIT. VALVE PIT & PIPELINE SHALL BE REMOVED, PACKAGED, AND DELIVERED TO THE INEEL VCO PROGRAM.

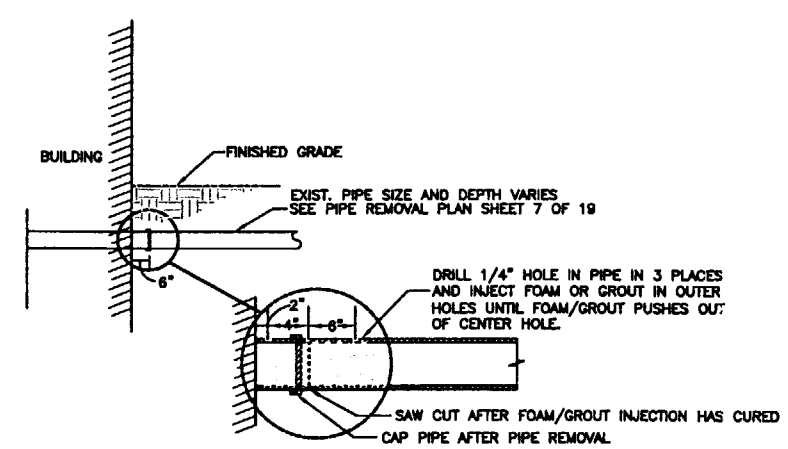

3/9/9 PIPE CUT/SEAL DETAIL

NTS

REGISTERED PROFESSIONAL ENGINEER 4596 STATE OF IDAHO BARRY KESHIAN JR.

11/16/01

50% REDUCTION

Revisions						
Rev. No.:	Date:	Descriptions:	Drawn By:	Checked By:	Project A/E:	Approval:

		Date
Designed by:	R. Ederer	11/16/01
Drawn by:	JMM/KDF	11/16/01
Checked by:	D.Brennecke	11/16/01
Project Manager:	B. Keshian	11/16/01
Client Approval:		

WESTON

6501 AMERICAS PARKWAY
SUITE 800
ALBUQUERQUE, NM 87110
(505) 884-5050

V-TANK REMEDIATION PROJECT
IDAHO FALLS, IDAHO

DEMOLITION & EXCAVATION DETAILS

DRAWING NO.: ABQ 00007-R00-C07

PROJECT NO.: 12393.002.001

SHEET # 9 OF 20

ABQ00007_R00_C07.DWG.KDF 11-16-01

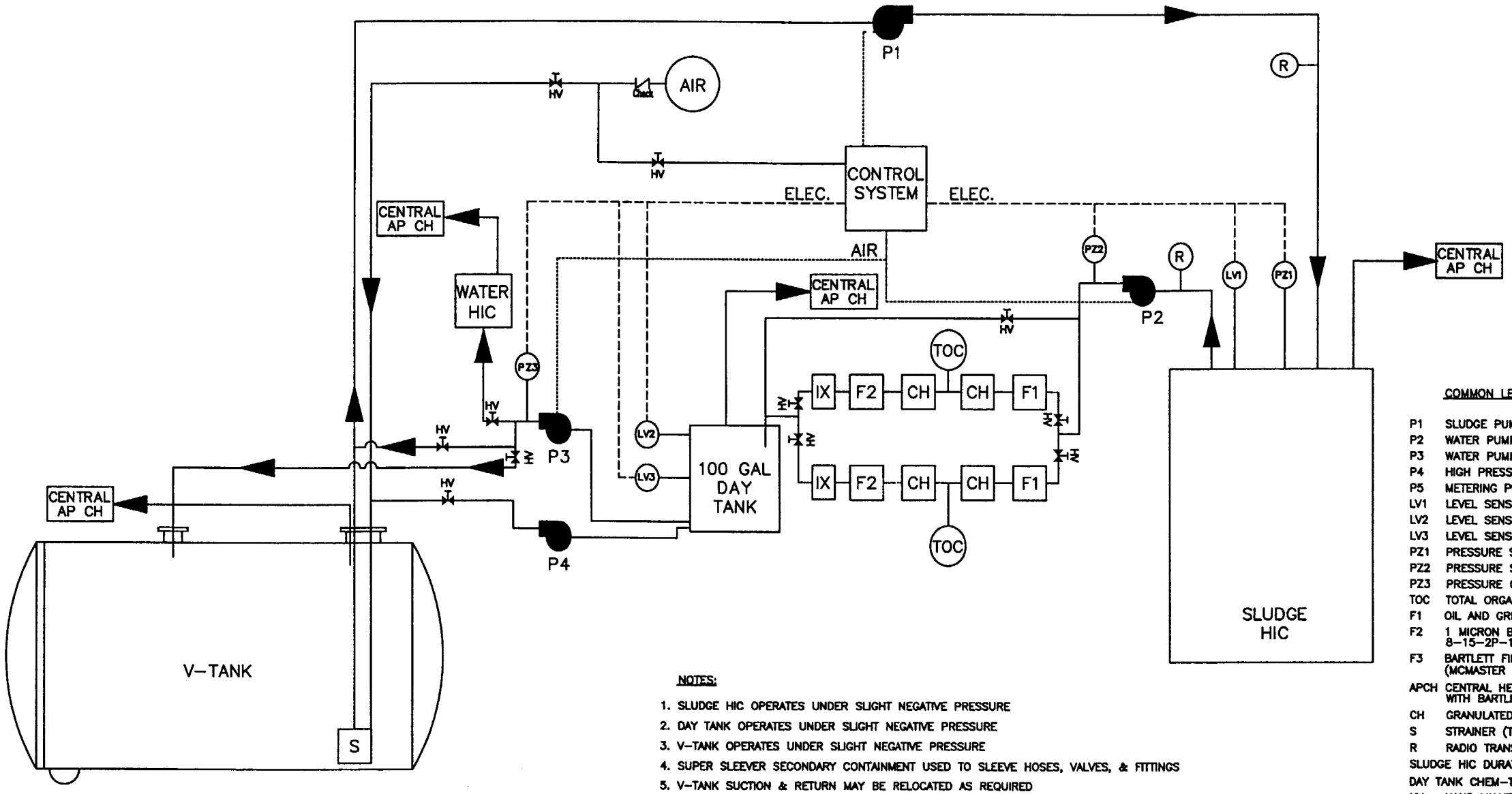

COMMON LEGEND FOR SHTS. 10 – 18

P1	SLUDGE PUMP (NE-5A BARTLETT MASTER-PUMP)
P2	WATER PUMP (WILDEN T-4)
P3	WATER PUMP (WILDEN T-4)
P4	HIGH PRESSURE PUMP (MCMASTER CARR 3138K26)
P5	METERING PUMP (NE-5A BARTLETT MASTER-PUMP)
LV1	LEVEL SENSOR (FLOWLINE LA21-5001)
LV2	LEVEL SENSOR (MCMASTER CARR PN 46515K81)
LV3	LEVEL SENSOR (MCMASTER CARR PN 46515K81)
PZ1	PRESSURE SENSOR (MCMASTER CARR PN 38915K77)
PZ2	PRESSURE SENSOR (MCMASTER CARR PN 38915K77)
PZ3	PRESSURE GAUGE (MCMASTER CARR PN 3852K125)
TOC	TOTAL ORGANIC CARBON MEASUREMENT PORT
F1	OIL AND GREASE FILTER (BONIFIBERS H IN 55 GAL DRUM)
F2	1 MICRON BAG FILTER (MCMASTER CARR 6835K11-13 & ROSEDALE 8-15-2P-150-S-B-S-B) W/43 GAL/MIN CAPACITY
F3	BARTLETT FILTER, 20 x 2" POLYPROPYLENE ELEMENT (MCMASTER CARR 4411K65) W/8 GAL/MIN CAPACITY/ELEMENT
APCH	CENTRAL HEPA FILTER W/CARBON UNIT (BARTLETT AP-1000-B WITH BARTLETT CH-1000)
CH	GRANULATED ACTIVATED CARBON FILTER (55 GAL) (GENERAL CARBON 8 x 30)
S	STRAINER (TYPICAL, 3/8")
R	RADIO TRANSCEIVING PROCESS DOSIMETER (SAIC MODEL PDE-4)
SLUDGE HIC	DURATEK PL8-120-FP-FEDX WITH BUILT IN FILTER UNIT
DAY TANK	CHEM-TAINER (TRANS-100)
HV	HAND VALVE (MCMASTER CARR 47865K21-28)
WATER HIC	DURATEK PL8-120-MT
IX	ION EXCHANGE RESIN

NOTE: COMPRESSED AIR REQUIRED – 375 CFM @ 125 PSI.

NOTES:

1. SLUDGE HIC OPERATES UNDER SLIGHT NEGATIVE PRESSURE
2. DAY TANK OPERATES UNDER SLIGHT NEGATIVE PRESSURE
3. V-TANK OPERATES UNDER SLIGHT NEGATIVE PRESSURE
4. SUPER SLEEVER SECONDARY CONTAINMENT USED TO SLEEVE HOSES, VALVES, & FITTINGS
5. V-TANK SUCTION & RETURN MAY BE RELOCATED AS REQUIRED
6. CONTROL LOGIC IS AS FOLLOWS:
   (1.) P1 "ON" IF (SLUDGE HIC LV1 ≠ HIGH) & (SLUDGE HIC PZ1 ≠ HIGH) & (F1 PZ2 ≠ HIGH)
   (2.) P2 "ON" IF (DAY TANK LV2 ≠ HIGH) & (SLUDGE HIC LV1 ≠ LOW) & (F1 PZ2 ≠ HIGH)
   (3.) P3 "ON" IF (DAY TANK LV3 ≠ LOW) & (P3 PZ3 ≠ HIGH)
   (4.) P4 IS MANUALLY OPERATED
7. SLUDGE CONTENT REMOVAL PROCESS WILL BE REPEATED UNIQUELY FOR EACH V-TANK. SLUDGES FROM RESPECTIVE TANKS WILL NOT BE MIXED DURING SLUDGE REMOVAL PROCESS

V-TANK SLUDGE CONTENT REMOVAL/WATER TREATMENT P & ID DETAIL (1/10)

NOT TO SCALE

REGISTERED PROFESSIONAL ENGINEER 4596 STATE OF IDAHO BEAGHESHAN, JR. 11/16/01

50% REDUCTION

THE INFORMATION CONTAINED IN THIS DOCUMENT IS THE INTELLECTUAL PROPERTY OF ROY F. WESTON, INC. & BARTLETT SERVICES, INC. AND SHALL ONLY BE USED FOR SUBCONTRACT K01-564442 WITH BBWI

Revisions

Rev. No.:	Date:	Descriptions:	Drawn By:	Checked By:	Project A/E:	Approval:

		Date
Designed by:	A. Desrosiers	11/16/01
Drawn by:	JMM/KDF	11/16/01
Checked by:	D.Brennecke	11/16/01
Project Manager:	B. Keshian	11/16/01
Client Approval:		

WESTON
6501 AMERICAS PARKWAY
SUITE 800
ALBUQUERQUE, NM 87110
(505) 884-5050

V-TANK REMEDIATION PROJECT
IDAHO FALLS, IDAHO

V-TANK SLUDGE CONTENT REMOVAL PROCESS & INSTRUMENTATION DIAGRAM (P & ID)

DRAWING NO.: ABQ 00008-R00-C08
PROJECT NO.: 12393.002.001
SHEET # 10 OF 20

ABQ00008_R00_C08.DWG.KDF 11-16-01

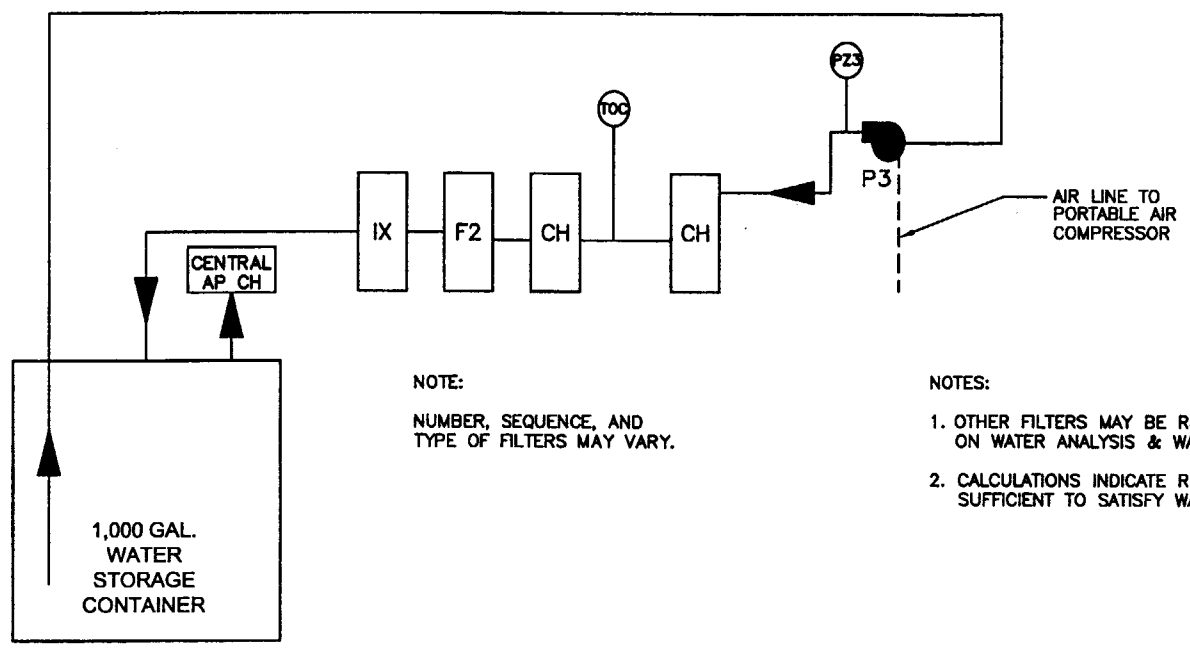

NOTE:

NUMBER, SEQUENCE, AND TYPE OF FILTERS MAY VARY.

NOTES:

1. OTHER FILTERS MAY BE REQUIRED DEPENDING ON WATER ANALYSIS & WAC.
2. CALCULATIONS INDICATE REMOVAL OF VOC SUFFICIENT TO SATISFY WAC.

COMMON LEGEND FOR SHTS. 10 – 18

P1 SLUDGE PUMP (NE-5A BARTLETT MASTER-PUMP)
P2 WATER PUMP (WILDEN T-4)
P3 WATER PUMP (WILDEN T-4)
P4 HIGH PRESSURE PUMP (MCMASTER CARR 3138K26)
P5 METERING PUMP (NE-5A BARTLETT MASTER-PUMP)
LV1 LEVEL SENSOR (FLOWLINE LA21-5001)
LV2 LEVEL SENSOR (MCMASTER CARR PN 46515K81)
LV3 LEVEL SENSOR (MCMASTER CARR PN 46515K81)
PZ1 PRESSURE SENSOR (MCMASTER CARR PN 38915K77)
PZ2 PRESSURE SENSOR (MCMASTER CARR PN 38915K77)
PZ3 PRESSURE GAUGE (MCMASTER CARR PN 3852K125)
TOC TOC MEASUREMENT PORT
F1 OIL AND GREASE FILTER (BONIFIBERS H IN 55 GAL DRUM)
F2 1 MICRON BAG FILTER (MCMASTER CARR 6835K11-13 & ROSEDALE 8-15-2P-150-S-B-S-B) W/43 GAL/MIN CAPACITY
F3 BARTLETT FILTER, 20 x 2" POLYPROPYLENE ELEMENT (MCMASTER CARR 4411K65) W/8 GAL/MIN CAPACITY/ELEMENT
APCH CENTRAL HEPA FILTER W/CARBON UNIT (BARTLETT AP-1000-B WITH BARTLETT CH-1000)
CH GRANULATED ACTIVATED CARBON FILTER (55 GAL) (GENERAL CARBON 8 x 30)
S STRAINER (TYPICAL, 3/8")
R RADIO TRANSCEIVING PROCESS DOSIMETER (SAIC MODEL PDE-4)
SLUDGE HIC DURATEK PL8-120-FP-FEDX WITH BUILT IN FILTER UNIT
DAY TANK CHEM-TAINER (TRANS-100)
HV HAND VALVE (MCMASTER CARR 47865K21-28)
WATER HIC DURATEK PL8-120-MT
IX ION EXCHANGE RESIN

NOTE: COMPRESSED AIR REQUIRED – 375 CFM @ 125 PSI.

THE INFORMATION CONTAINED IN THIS DOCUMENT IS THE INTELLECTUAL PROPERTY OF ROY F. WESTON, INC. & BARTLETT SERVICES, INC. AND SHALL ONLY BE USED FOR SUBCONTRACT K01-564442 WITH BBWI

V-TANK BACKUP WATER TREATMENT P & ID DETAIL

NOT TO SCALE

REGISTERED PROFESSIONAL ENGINEER 4596 STATE OF IDAHO BERG KESHIAN
11/16/01

50% REDUCTION

Revisions						
Rev. No.:	Date:	Descriptions:	Drawn By:	Checked By:	Project A/E:	Approval:

		Date
Designed by:	A. Desrosiers	11/16/01
Drawn by:	AL/JMM	11/16/01
Checked by:	D.Brennecke	11/16/01
Project Manager:	B. Keshian	11/16/01
Client Approval:		

WESTON
6501 AMERICAS PARKWAY
SUITE 800
ALBUQUERQUE, NM 87110
(505) 884-5050

V-TANK REMEDIATION PROJECT
IDAHO FALLS, IDAHO

V-TANK WATER TREATMENT PROCESS & INSTRUMENTATION (P & ID) DETAILS

DRAWING NO.: ABQ 00013-R00-C09
PROJECT NO.: 12393.002.001
SHEET # 11 OF 20

ABQ00013_R00_C09.DWG.KDF 11-16-01

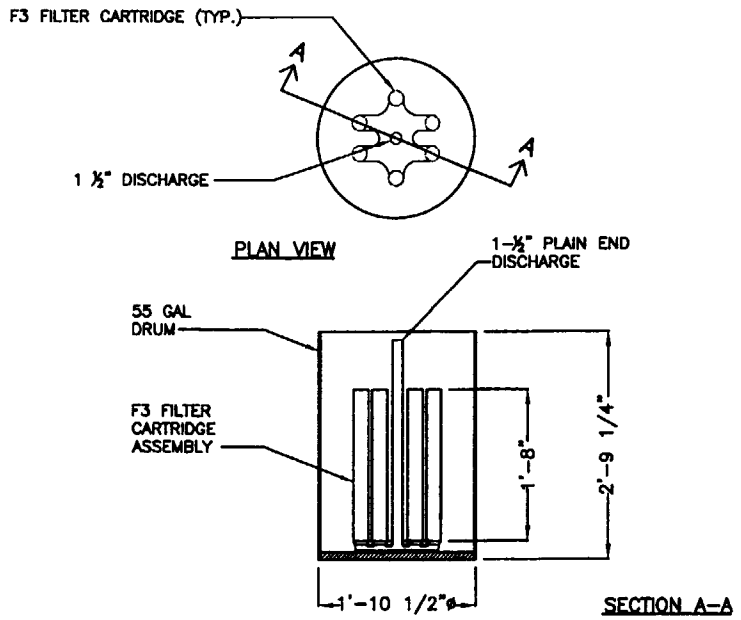

DRUM DEWATER CANISTER DETAIL 1 (12|12)

NOT TO SCALE

NOTES:

1. F3 CARTRIDGES MAY BE INSTALLED EITHER HORIZONTALLY OR VERTICALLY DEPENDING ON MOCK UP TESTING. THE F3 FILTER CARTRIDGE ASSEMBLY WILL BE FABRICATED WITH A COLLECTION MANIFOLD AND DISCHARGE SYSTEM. CARTRIDGE ASSEMBLY WILL BE INSERTED INTO DRUM.
2. AFTER DRUM HAS BEEN FILLED TO DESIGNATED LEVEL, DEWATERING LID WILL BE PLACED ON DRUM SO SPECIFIED VACUUM CAN BE APPLIED.

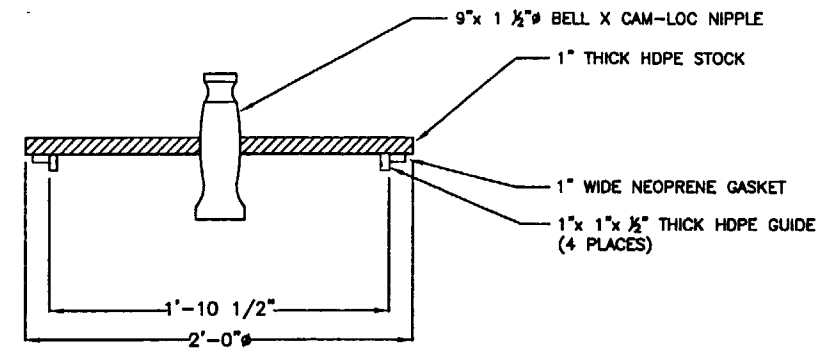

DRUM DEWATERING LID DETAIL 2 (12|12)

NOT TO SCALE

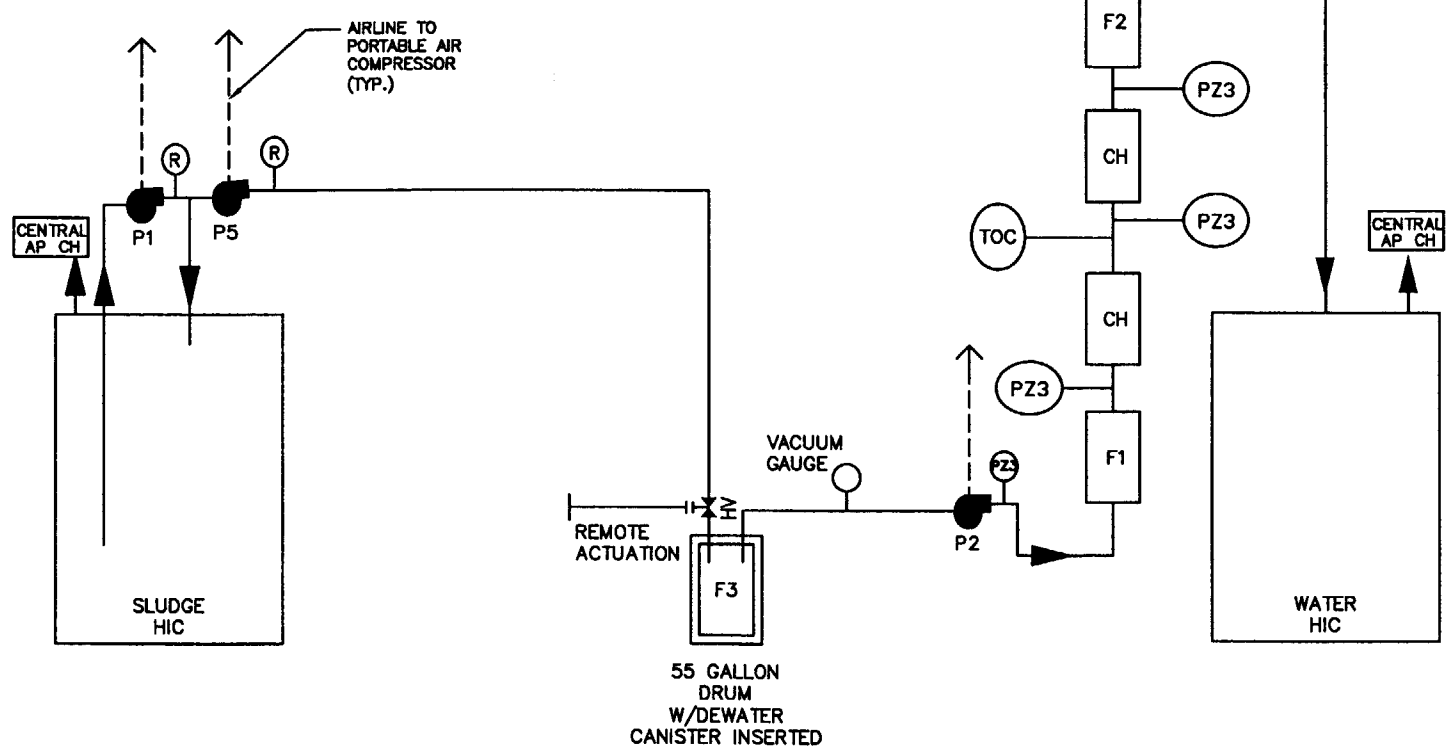

V-TANK DRUM FILLING & DEWATERING P&ID DETAIL 3 (12|12)

NOT TO SCALE

COMMON LEGEND FOR SHTS. 10 – 18

P1	SLUDGE PUMP (NE-5A BARTLETT MASTER-PUMP)
P2	WATER PUMP (WILDEN T-4)
P3	WATER PUMP (WILDEN T-4)
P4	HIGH PRESSURE PUMP (MCMASTER CARR 3138K26)
P5	METERING PUMP (NE-5A BARTLETT MASTER-PUMP)
LV1	LEVEL SENSOR (FLOWLINE LA21-5001)
LV2	LEVEL SENSOR (MCMASTER CARR PN 46515K81)
LV3	LEVEL SENSOR (MCMASTER CARR PN 46515K81)
PZ1	PRESSURE SENSOR (MCMASTER CARR PN 38915K77)
PZ2	PRESSURE SENSOR (MCMASTER CARR PN 38915K77)
PZ3	PRESSURE GAUGE (MCMASTER CARR PN 3852K125)
TOC	TOC MEASUREMENT PORT
F1	OIL AND GREASE FILTER (BONIFIBERS H IN 55 GAL DRUM)
F2	1 MICRON BAG FILTER (MCMASTER CARR 6835K11-13 & ROSEDALE 8-15-2P-150-S-B-S-B) W/43 GAL/MIN CAPACITY
F3	BARTLETT FILTER, 20 x 2" POLYPROPYLENE ELEMENT (MCMASTER CARR 4411K65) W/8 GAL/MIN CAPACITY/ELEMENT
APCH	CENTRAL HEPA FILTER W/CARBON UNIT (BARTLETT AP-1000-B WITH BARTLETT CH-1000)
CH	GRANULATED ACTIVATED CARBON FILTER (55 GAL) (GENERAL CARBON 8 x 30)
S	STRAINER (TYPICAL, 3/8")
R	RADIO TRANSCEIVING PROCESS DOSIMETER (SAIC MODEL PDE-4)
SLUDGE HIC	DURATEK PL8-120-FP-FEDX WITH BUILT IN FILTER UNIT
DAY TANK	CHEM-TAINER (TRANS-100)
HV	HAND VALVE (MCMASTER CARR 47865K21-28)
WATER HIC	DURATEK PL8-120-MT
IX	ION EXCHANGE RESIN

NOTE: COMPRESSED AIR REQUIRED – 375 CFM @ 125 PSI.

REGISTERED PROFESSIONAL ENGINEER 4596 STATE OF IDAHO BERJ KESHIAN, JR.

11/16/01

50% REDUCTION

THE INFORMATION CONTAINED IN THIS DOCUMENT IS THE INTELLECTUAL PROPERTY OF ROY F. WESTON, INC. & BARTLETT SERVICES, INC. AND SHALL ONLY BE USED FOR SUBCONTRACT K01-564442 WITH BBWI

Revisions

Rev. No.:	Date:	Descriptions:	Drawn By:	Checked By:	Project A/E:	Approval:

		Date
Designed by:	A. Desrosiers	11/16/01
Drawn by:	JMM/KDF	11/16/01
Checked by:	D.Brennecke	11/16/01
Project Manager:	B. Keshian	11/16/01
Client Approval:		

WESTON
6501 AMERICAS PARKWAY
SUITE 800
ALBUQUERQUE, NM 87110
(505) 884-5050

V-TANK REMEDIATION PROJECT
IDAHO FALLS, IDAHO

V-TANK DRUM FILLING & DEWATERING PROCESS AND INSTRUMENTATION DIAGRAM (P & ID)

DRAWING NO.: ABQ 00014-R00-C10

PROJECT NO.: 12393.002.001

SHEET # 12 OF 20

ABQ00014_R00_C10.DWG.KDF 11-16-01

NOTES:

1. PLAN VIEW SHOWS ARRANGEMENT OF PIPING FOR REMOVING SLUDGE/TREATING WATER FOR V-TANK 2. PUMP P1 SUCTION LINES AND RETURN LINES WILL BE RELOCATED TO RESPECTIVE TANK WHERE SLUDGE REMOVAL/WATER TREATMENT IS BEING CONDUCTED AND INSTALLED IN A SIMILIAR FASHION. THE LAYOUT OF ALL OTHER COMPONENTS WILL REMAIN THE SAME FOR EACH TANK.
2. SLUDGE HIC AND WATER HIC WILL BE CHANGED OUT AS NECESSARY AND TRANSPORTED TO THE RESPECTIVE STORAGE AREA.
3. SLUDGE SUCTION LINE FROM RESPECTIVE TANK WILL BE ROUTED THROUGH BURIED 6" CONDUIT VIA V-TANK 2 MANWAY TO SLUDGE HIC.

THE INFORMATION CONTAINED IN THIS DOCUMENT IS THE INTELLECTUAL PROPERTY OF ROY F. WESTON, INC. & BARTLETT SERVICES, INC. AND SHALL ONLY BE USED FOR SUBCONTRACT K01-564442 WITH BBWI

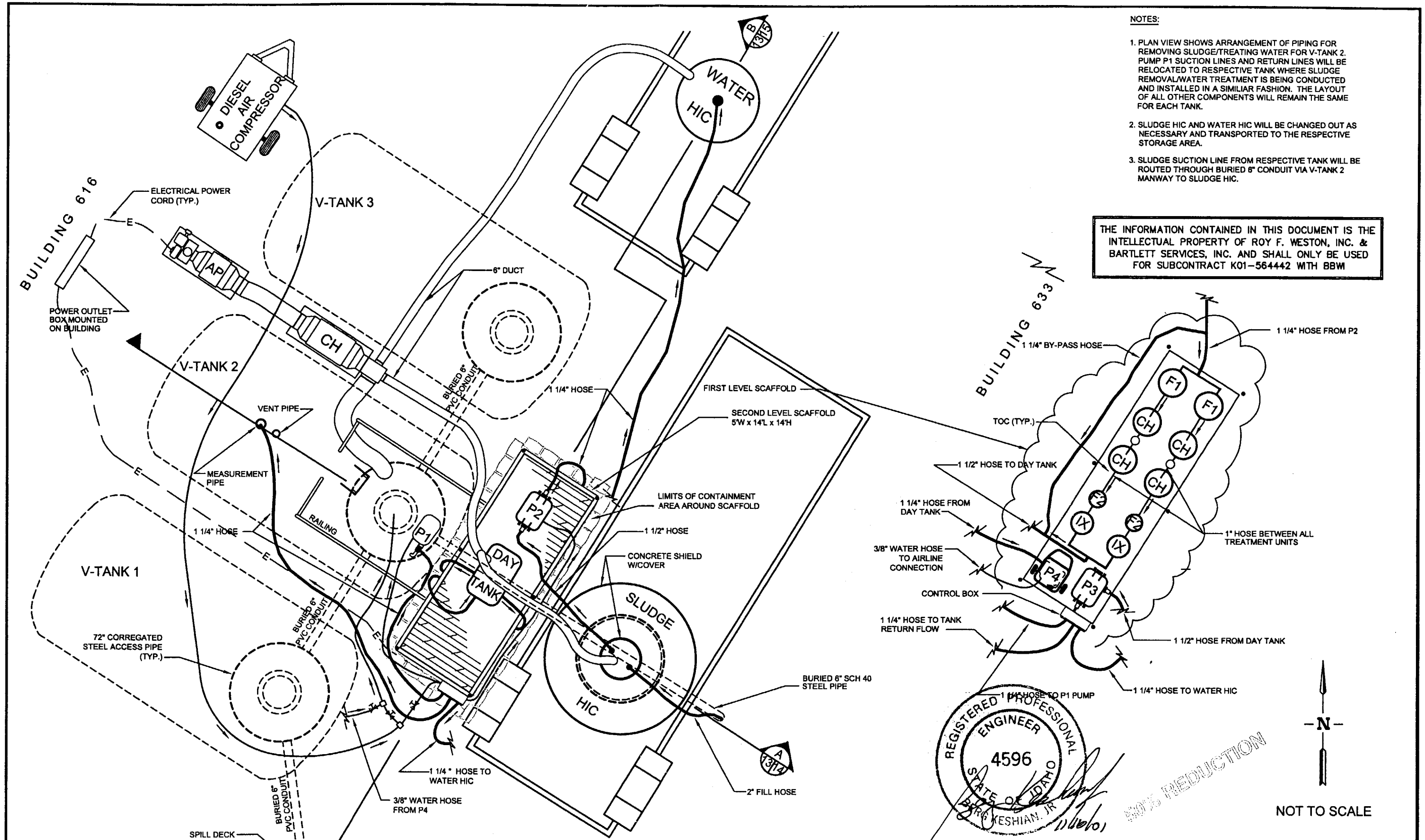

Revisions						
Rev. No.:	Date:	Descriptions:	Drawn By:	Checked By:	Project A/E:	Approval:

		Date
Designed by:	A. Desrosiers	11/16/01
Drawn by:	KDF	11/16/01
Checked by:	D.Brennecke	11/16/01
Project Manager:	B. Keshian	11/16/01
Client Approval:		

WESTON
6501 AMERICAS PARKWAY
SUITE 800
ALBUQUERQUE, NM 87110
(505) 884-5050

V-TANK REMEDIATION PROJECT
IDAHO FALLS, IDAHO

V-TANK SLUDGE CONTENT REMOVAL/ WATER TREATMENT PLAN

DRAWING NO.: ABQ 00015-R00-C11
PROJECT NO.: 12393.002.001
SHEET # 13 OF 20

ABQ00015_R00_C11.DWG.KDF 11-16-01

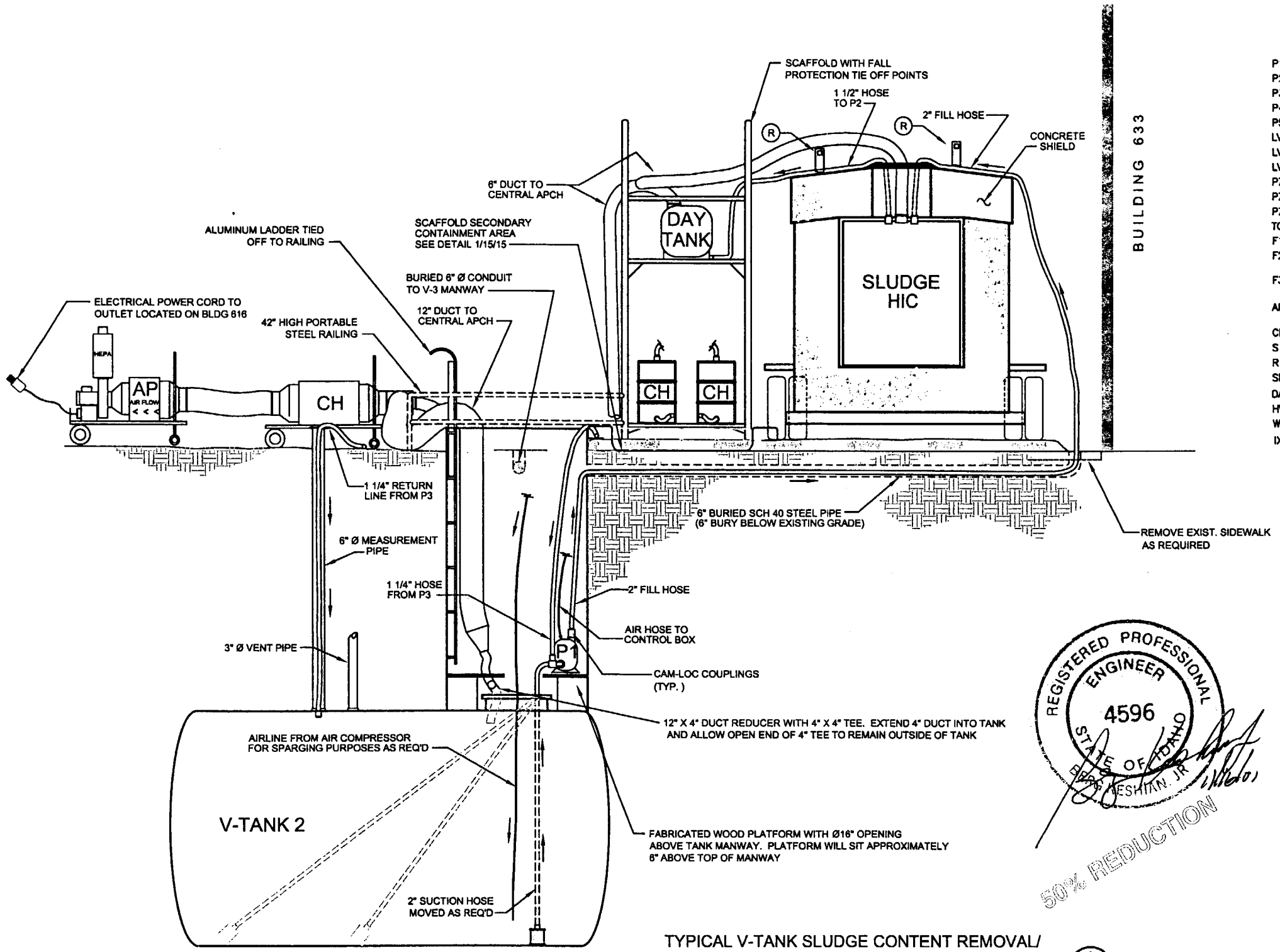

TYPICAL V-TANK SLUDGE CONTENT REMOVAL/
WATER TREATMENT PROFILE SCHEMATIC DETAIL (A 13/14)
NOT TO SCALE

COMMON LEGEND FOR SHTS. 10–18

P1	SLUDGE PUMP (NE–5A BARTLETT MASTER–PUMP)
P2	WATER PUMP (WILDEN T–4)
P3	WATER PUMP (WILDEN T–4)
P4	HIGH PRESSURE PUMP (MCMASTER CARR 3138K26)
P5	METERING PUMP (NE–5A BARTLETT MASTER–PUMP)
LV1	LEVEL SENSOR (FLOWLINE LA21–5001)
LV2	LEVEL SENSOR (MCMASTER CARR PN 46515K81)
LV3	LEVEL SENSOR (MCMASTER CARR PN 46515K81)
PZ1	PRESSURE SENSOR (MCMASTER CARR PN 38915K77)
PZ2	PRESSURE SENSOR (MCMASTER CARR PN 38915K77)
PZ3	PRESSURE GAUGE (MCMASTER CARR PN 3852K125)
TOC	TOC MEASUREMENT PORT
F1	OIL AND GREASE FILTER (BONIFIBERS H IN 55 GAL DRUM)
F2	1 MICRON BAG FILTER (MCMASTER CARR 6835K11–13 & ROSEDALE 8–15–2P–150–S–B–S–B) W/43 GAL/MIN CAPACITY
F3	BARTLETT FILTER, 20 x 2" POLYPROPYLENE ELEMENT (MCMASTER CARR 4411K65) W/8 GAL/MIN CAPACITY/ELEMENT
APCH	CENTRAL HEPA FILTER W/CARBON UNIT (BARTLETT AP–1000–B WITH BARTLETT CH–1000)
CH	GRANULATED ACTIVATED CARBON FILTER (55 GAL) (GENERAL CARBON 8 x 30)
S	STRAINER (TYPICAL, 3/8")
R	RADIO TRANSCEIVING PROCESS DOSIMETER (SAIC MODEL PDE–4)
SLUDGE HIC	DURATEK PL8–120–FP–FEDX WITH BUILT IN FILTER UNIT
DAY TANK	CHEM–TAINER (TRANS–100)
HV	HAND VALVE (MCMASTER CARR 47865K21–28)
WATER HIC	DURATEK PL8–120–MT
IX	ION EXCHANGE RESIN

NOTE: COMPRESSED AIR REQUIRED – 375 CFM @ 125 PSI.

REGISTERED PROFESSIONAL ENGINEER 4596 STATE OF IDAHO B. R. KESHIAN, JR.

50% REDUCTION

NOTES:

1. ALL SLUDGE & WATER HOSE CONNECTIONS TO PUMPS, DRUMS, FILTERS, TANKS, HICS, VALVES, AND OTHER HOSES ARE FIBERGLASS REINFORCED NYLON CAM-LOC COUPLINGS.
2. SEE SHEET 10 OF 19 FOR SLUDGE CONTENT REMOVAL/ WATER TREATMENT P & ID. LOCATION OF LEVEL & PRESSURE SENSORS ARE SHOWN ON P & ID ALONG WITH OPERATING CONTROL LOGIC FOR EACH.
3. BEFORE SLUDGE HIC IS CHANGED OUT, WATER FROM V-TANK BEING PROCESSED WILL BE ADDED BACK IN TO SLUDGE HIC IN AN AMOUNT THAT WILL FACILITATE TRANSFERING OF SLUDGE TO DRUMS.
4. ESTIMATE OF MAXIMUM RADIOLOGIC EXPOSURE DOSE RATES BASED ON AVERAGE SLUDGE CONCENTRATIONS ARE AS FOLLOWS (SEE CALCULATION ABQ01-HP001):

EQUIPMENT TYPE	@ CONTACT (mR/hr)	@ 100 cm (mR/hr)
Pumps	1268	6.8
Hoses	659	21.3

THE INFORMATION CONTAINED IN THIS DOCUMENT IS THE INTELLECTUAL PROPERTY OF ROY F. WESTON, INC. & BARTLETT SERVICES, INC. AND SHALL ONLY BE USED FOR SUBCONTRACT K01–564442 WITH BBWI

Revisions						
Rev. No.:	Date:	Descriptions:	Drawn By:	Checked By:	Project A/E:	Approval:

		Date
Designed by:	A. Desrosiers	11/16/01
Drawn by:	KDF	11/16/01
Checked by:	D.Brennecke	11/16/01
Project Manager:	B. Keshian	11/16/01
Client Approval:		

WESTON
6501 AMERICAS PARKWAY
SUITE 800
ALBUQUERQUE, NM 87110
(505) 884–5050

V-TANK REMEDIATION PROJECT
IDAHO FALLS, IDAHO

V-TANK SLUDGE CONTENT REMOVAL
WATER TREATMENT
SECTION DETAILS

DRAWING NO.: ABQ 00016-R00-C12
PROJECT NO.: 12393.002.001
SHEET # 14 OF 20

ABQ00016_R00_C12.DWG.KDF 11–16–01

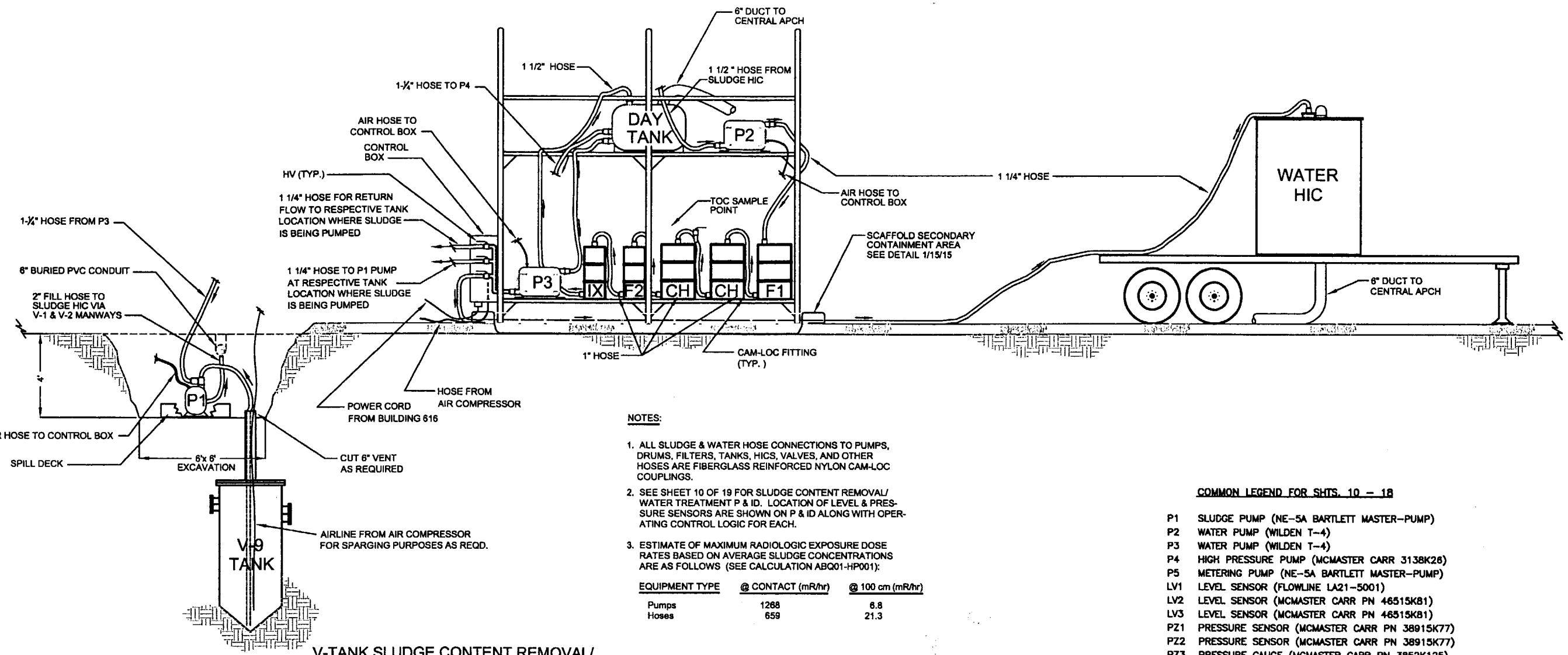

V-TANK SLUDGE CONTENT REMOVAL/ WATER TREATMENT PROFILE SCHEMATIC DETAIL (B / 13,15)

NOT TO SCALE

NOTES:

1. ALL SLUDGE & WATER HOSE CONNECTIONS TO PUMPS, DRUMS, FILTERS, TANKS, HICS, VALVES, AND OTHER HOSES ARE FIBERGLASS REINFORCED NYLON CAM-LOC COUPLINGS.
2. SEE SHEET 10 OF 19 FOR SLUDGE CONTENT REMOVAL/ WATER TREATMENT P & ID. LOCATION OF LEVEL & PRESSURE SENSORS ARE SHOWN ON P & ID ALONG WITH OPERATING CONTROL LOGIC FOR EACH.
3. ESTIMATE OF MAXIMUM RADIOLOGIC EXPOSURE DOSE RATES BASED ON AVERAGE SLUDGE CONCENTRATIONS ARE AS FOLLOWS (SEE CALCULATION ABQ01-HP001):

EQUIPMENT TYPE	@ CONTACT (mR/hr)	@ 100 cm (mR/hr)
Pumps	1268	6.8
Hoses	659	21.3

COMMON LEGEND FOR SHTS. 10 – 18

P1	SLUDGE PUMP (NE-5A BARTLETT MASTER-PUMP)
P2	WATER PUMP (WILDEN T-4)
P3	WATER PUMP (WILDEN T-4)
P4	HIGH PRESSURE PUMP (MCMASTER CARR 3138K26)
P5	METERING PUMP (NE-5A BARTLETT MASTER-PUMP)
LV1	LEVEL SENSOR (FLOWLINE LA21-5001)
LV2	LEVEL SENSOR (MCMASTER CARR PN 46515K81)
LV3	LEVEL SENSOR (MCMASTER CARR PN 46515K81)
PZ1	PRESSURE SENSOR (MCMASTER CARR PN 38915K77)
PZ2	PRESSURE SENSOR (MCMASTER CARR PN 38915K77)
PZ3	PRESSURE GAUGE (MCMASTER CARR PN 3852K125)
TOC	TOC MEASUREMENT PORT
F1	OIL AND GREASE FILTER (BONIFIBERS H IN 55 GAL DRUM)
F2	1 MICRON BAG FILTER (MCMASTER CARR 6835K11-13 & ROSEDALE 8-15-2P-150-S-B-S-B) W/43 GAL/MIN CAPACITY
F3	BARTLETT FILTER, 20 x 2" POLYPROPYLENE ELEMENT (MCMASTER CARR 4411K65) W/8 GAL/MIN CAPACITY/ELEMENT
APCH	CENTRAL HEPA FILTER W/CARBON UNIT (BARTLETT AP-1000-B WITH BARTLETT CH-1000)
CH	GRANULATED ACTIVATED CARBON FILTER (55 GAL) (GENERAL CARBON 8 x 30)
S	STRAINER (TYPICAL, 3/8")
R	RADIO TRANSCEIVING PROCESS DOSIMETER (SAIC MODEL PDE-4)
SLUDGE HIC	DURATEK PL8-120-FP-FEDX WITH BUILT IN FILTER UNIT
DAY TANK	CHEM-TAINER (TRANS-100)
HV	HAND VALVE (MCMASTER CARR 47865K21-28)
WATER HIC	DURATEK PL8-120-MT
IX	ION EXCHANGE RESIN

NOTE: COMPRESSED AIR REQUIRED – 375 CFM @ 125 PSI.

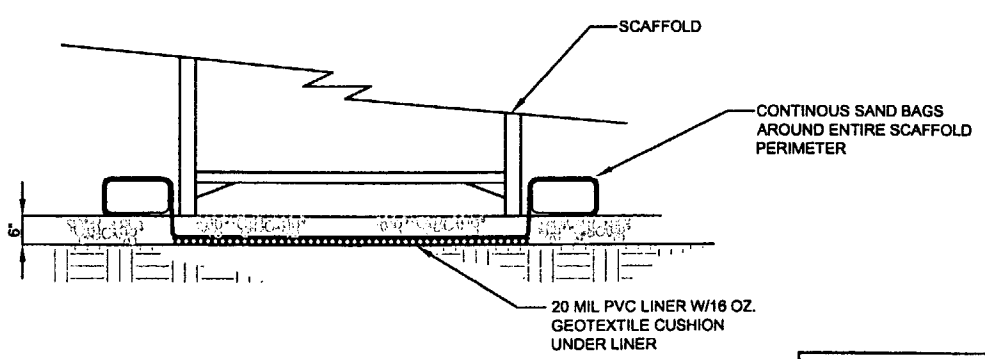

SCAFFOLD SECONDARY CONTAINMENT AREA DETAIL (1 / 15)

NOT TO SCALE

13, 14, 15

REGISTERED PROFESSIONAL ENGINEER 4596 STATE OF IDAHO BERG KESHIAN JR. 11/16/01

50% REDUCTION

THE INFORMATION CONTAINED IN THIS DOCUMENT IS THE INTELLECTUAL PROPERTY OF ROY F. WESTON, INC. & BARTLETT SERVICES, INC. AND SHALL ONLY BE USED FOR SUBCONTRACT K01-564442 WITH BBWI

Revisions						
Rev. No.:	Date:	Descriptions:	Drawn By:	Checked By:	Project A/E:	Approval:

		Date
Designed by:	A. Desrosiers	11/16/01
Drawn by:	KDF	11/16/01
Checked by:	D.Brennecke	11/16/01
Project Manager:	B. Keshian	11/16/01
Client Approval:		

WESTON
6501 AMERICAS PARKWAY
SUITE 800
ALBUQUERQUE, NM 87110
(505) 884-5050

V-TANK REMEDIATION PROJECT
IDAHO FALLS, IDAHO

V-TANK SLUDGE CONTENT REMOVAL WATER TREATMENT SECTION DETAILS

DRAWING NO.: ABQ 00017-R00-C13
PROJECT NO.: 12393.002.001
SHEET # 15 OF 20

ABQ00017_R00_C13.DWG.KDF 11-16-01

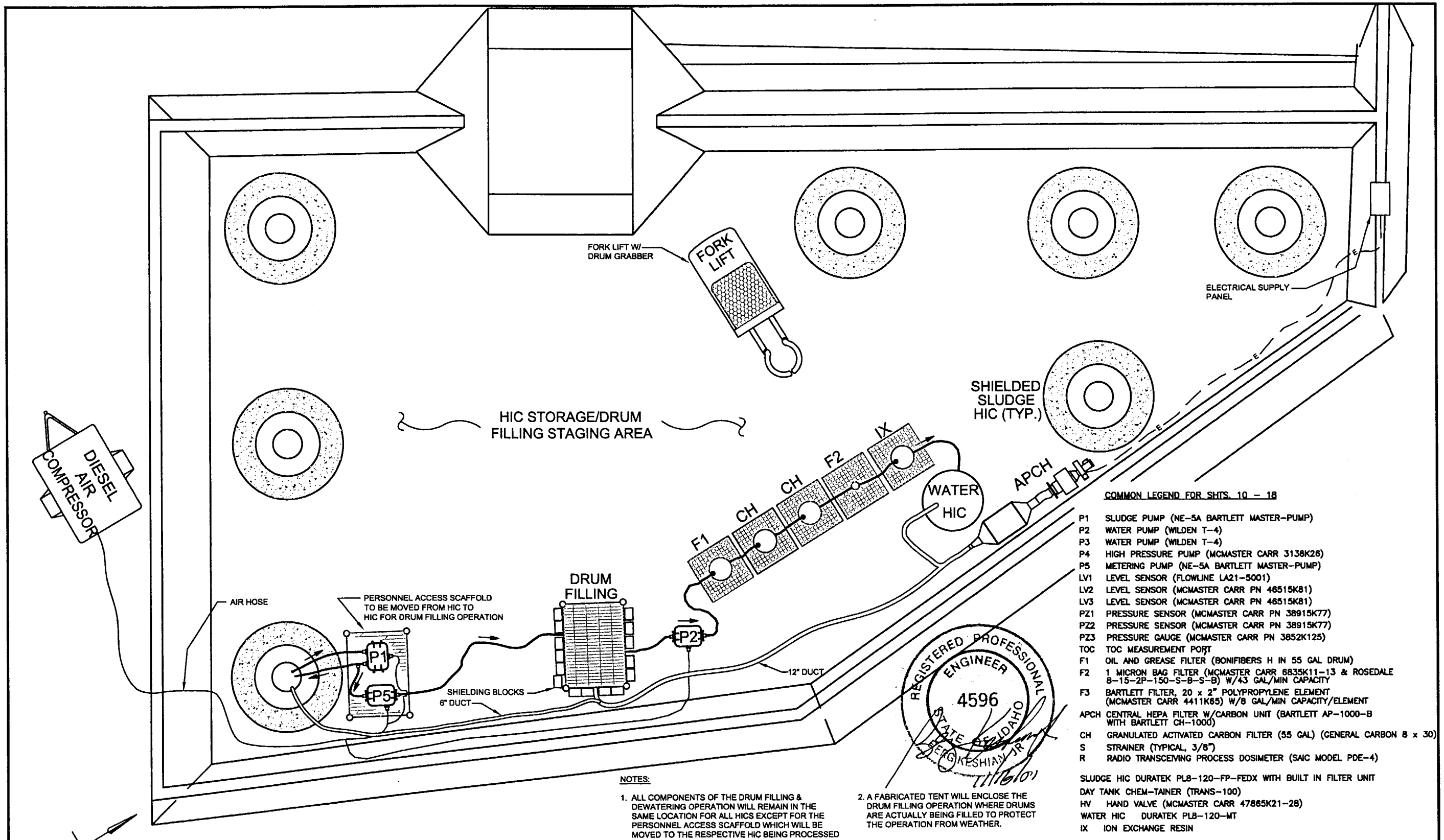

COMMON LEGEND FOR SHTS. 10 – 18

P1	SLUDGE PUMP (NE-5A BARTLETT MASTER-PUMP)
P2	WATER PUMP (WILDEN T-4)
P3	WATER PUMP (WILDEN T-4)
P4	HIGH PRESSURE PUMP (MCMASTER CARR 3138K26)
P5	METERING PUMP (NE-5A BARTLETT MASTER-PUMP)
LV1	LEVEL SENSOR (FLOWLINE LA21-5001)
LV2	LEVEL SENSOR (MCMASTER CARR PN 46515K81)
LV3	LEVEL SENSOR (MCMASTER CARR PN 46515K81)
PZ1	PRESSURE SENSOR (MCMASTER CARR PN 38915K77)
PZ2	PRESSURE SENSOR (MCMASTER CARR PN 38915K77)
PZ3	PRESSURE GAUGE (MCMASTER CARR PN 3852K125)
TOC	TOC MEASUREMENT PORT
F1	OIL AND GREASE FILTER (BONIFIBERS H IN 55 GAL DRUM)
F2	1 MICRON BAG FILTER (MCMASTER CARR 6835K11-13 & ROSEDALE 8-15-2P-150-S-B-S-B) W/43 GAL/MIN CAPACITY
F3	BARTLETT FILTER, 20 x 2" POLYPROPYLENE ELEMENT (MCMASTER CARR 4411K65) W/8 GAL/MIN CAPACITY/ELEMENT
APCH	CENTRAL HEPA FILTER W/CARBON UNIT (BARTLETT AP-1000-B WITH BARTLETT CH-1000)
CH	GRANULATED ACTIVATED CARBON FILTER (55 GAL) (GENERAL CARBON 8 x 30)
S	STRAINER (TYPICAL, 3/8")
R	RADIO TRANSCEIVING PROCESS DOSIMETER (SAIC MODEL PDE-4)

SLUDGE HIC DURATEK PL8-120-FP-FEDX WITH BUILT IN FILTER UNIT
DAY TANK CHEM-TAINER (TRANS-100)
HV HAND VALVE (MCMASTER CARR 47865K21-28)
WATER HIC DURATEK PL8-120-MT
IX ION EXCHANGE RESIN

NOTE: COMPRESSED AIR REQUIRED – 375 CFM @ 125 PSI.

NOTES:

1. ALL COMPONENTS OF THE DRUM FILLING & DEWATERING OPERATION WILL REMAIN IN THE SAME LOCATION FOR ALL HICS EXCEPT FOR THE PERSONNEL ACCESS SCAFFOLD WHICH WILL BE MOVED TO THE RESPECTIVE HIC BEING PROCESSED
2. A FABRICATED TENT WILL ENCLOSE THE DRUM FILLING OPERATION WHERE DRUMS ARE ACTUALLY BEING FILLED TO PROTECT THE OPERATION FROM WEATHER.

V-TANK DRUM FILLING & DEWATERING PLAN DETAIL (1 / 16 | 16)
NOT TO SCALE

NOT REDUCTION

Revisions						
Rev. No.:	Date:	Descriptions:	Drawn By:	Checked By:	Project A/E:	Approval:

		Date
Designed by:	A. Desrosiers	11/16/01
Drawn by:	AL/KDF	11/16/01
Checked by:	D.Brennecke	11/16/01
Project Manager:	B. Keshian	11/16/01
Client Approval:		

WESTON
6501 AMERICAS PARKWAY
SUITE 800
ALBUQUERQUE, NM 87110
(505) 884-5050

V-TANK REMEDIATION PROJECT
IDAHO FALLS, IDAHO

DRUM FILLING & DEWATERING PLAN

DRAWING NO.: ABQ 00018-R00-C14
PROJECT NO.: 12393.002.001
SHEET # 16 OF 20

ABQ00018_R00_C14.DWG.KDF 11-16-01

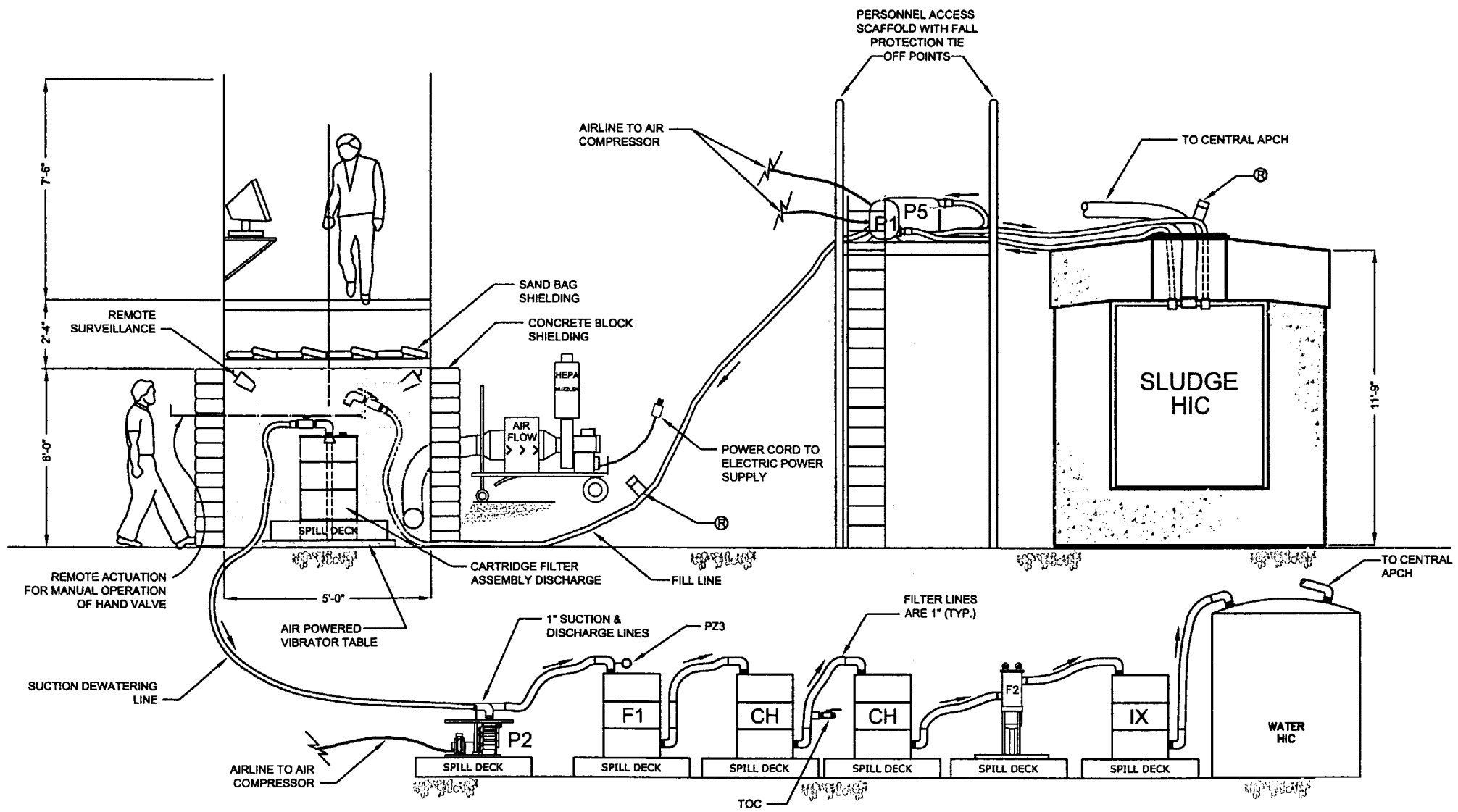

V-TANK DRUM FILLING & DEWATERING PROFILE SCHEMATIC DETAIL

NOT TO SCALE

1 / 17 | 17

NOTES:

1. SUPER SLEEVER SECONDARY CONTAINMENT USED TO SLEEVE HOSES, VALVES, & FITTINGS.
2. SCAFFOLD IS 7' LONG
3. SCAFFOLD DECK SANDBAG LOAD CAPACITY: 75 LBS./FT
4. ALL SLUDGE LINES AND WATER HOSE CONNECTIONS TO PUMPS, DRUMS, FILTERS, TANKS, HICS, VALVES, AND OTHER HOSES ARE FIBERGLASS REINFORCED NYLON CAM-LOC COUPLINGS.
5. CONTENTS OF WATER HIC WILL BE TREATED AS REQUIRED.
6. SLUDGE LINES AND WATER LINES WILL BE PURGED WITH AIR PRIOR TO CHANGING FILTERS OR DISCONNECTING HOSES.
7. SEE SHEET 12 OF 19 FOR DRUM FILLING & DEWATERING P & ID.
8. ESTIMATE OF MAXIMUM RADIOLOGIC EXPOSURE DOSE RATES BASED ON AVERAGE SLUDGE CONCENTRATIONS ARE AS FOLLOWS: (SEE CALCULATION ABQ01-HP001):

EQUIPMENT TYPE	@ CONTACT (mR/hr)	@ 100 CM (mR/hr)
PUMPS	1268	6.8
HOSES	659	21.3
DRUMS	7398	193

COMMON LEGEND FOR SHTS. 10 – 18

P1 SLUDGE PUMP (NE-5A BARTLETT MASTER-PUMP)
P2 WATER PUMP (WILDEN T-4)
P3 WATER PUMP (WILDEN T-4)
P4 HIGH PRESSURE PUMP (MCMASTER CARR 3138K26)
P5 METERING PUMP (NE-5A BARTLETT MASTER-PUMP)
LV1 LEVEL SENSOR (FLOWLINE LA21-5001)
LV2 LEVEL SENSOR (MCMASTER CARR PN 46515K81)
LV3 LEVEL SENSOR (MCMASTER CARR PN 46515K81)
PZ1 PRESSURE SENSOR (MCMASTER CARR PN 38915K77)
PZ2 PRESSURE SENSOR (MCMASTER CARR PN 38915K77)
PZ3 PRESSURE GAUGE (MCMASTER CARR PN 3852K125)
TOC TOC MEASUREMENT PORT
F1 OIL AND GREASE FILTER (BONIFIBERS H IN 55 GAL DRUM)
F2 1 MICRON BAG FILTER (MCMASTER CARR 6835K11-13 & ROSEDALE 8-15-2P-150-S-B-S-B) W/43 GAL/MIN CAPACITY
F3 BARTLETT FILTER, 20 x 2" POLYPROPYLENE ELEMENT (MCMASTER CARR 4411K65) W/8 GAL/MIN CAPACITY/ELEMENT
APCH CENTRAL HEPA FILTER W/CARBON UNIT (BARTLETT AP-1000-B WITH BARTLETT CH-1000)
CH GRANULATED ACTIVATED CARBON FILTER (55 GAL) (GENERAL CARBON 8 x 30)
S STRAINER (TYPICAL, 3/8")
R RADIO TRANSCEIVING PROCESS DOSIMETER (SAIC MODEL PDE-4)
SLUDGE HIC DURATEK PL8-120-FP-FEDX WITH BUILT IN FILTER UNIT
DAY TANK CHEM-TAINER (TRANS-100)
HV HAND VALVE (MCMASTER CARR 47865K21-28)
WATER HIC DURATEK PL8-120-MT
IX ION EXCHANGE RESIN

NOTE: COMPRESSED AIR REQUIRED – 375 CFM @ 125 PSI.

THE INFORMATION CONTAINED IN THIS DOCUMENT IS THE INTELLECTUAL PROPERTY OF ROY F. WESTON, INC. & BARTLETT SERVICES, INC. AND SHALL ONLY BE USED FOR SUBCONTRACT K01-564442 WITH BBWI

REGISTERED PROFESSIONAL ENGINEER 4596 STATE OF IDAHO BERGESHAW, JR 11/16/01

NON-REPRODUCTION

Revisions						
Rev. No.:	Date:	Descriptions:	Drawn By:	Checked By:	Project A/E:	Approval:

		Date
Designed by:	R. Ederer	11/16/01
Drawn by:	JMM/KDF	11/16/01
Checked by:	D.Brennecke	11/16/01
Project Manager:	B. Keshian	11/16/01
Client Approval:		

WESTON
6501 AMERICAS PARKWAY
SUITE 800
ALBUQUERQUE, NM 87110
(505) 884-5050

V-TANK REMEDIATION PROJECT
IDAHO FALLS, IDAHO

DRUM FILLING & DEWATERING SECTION DETAILS

DRAWING NO.: ABQ 00020-R00-C15
PROJECT NO.: 12393.002.001
SHEET # 17 OF 20

ABQ00020_R00_C15.DWG.KDF 11-16-01

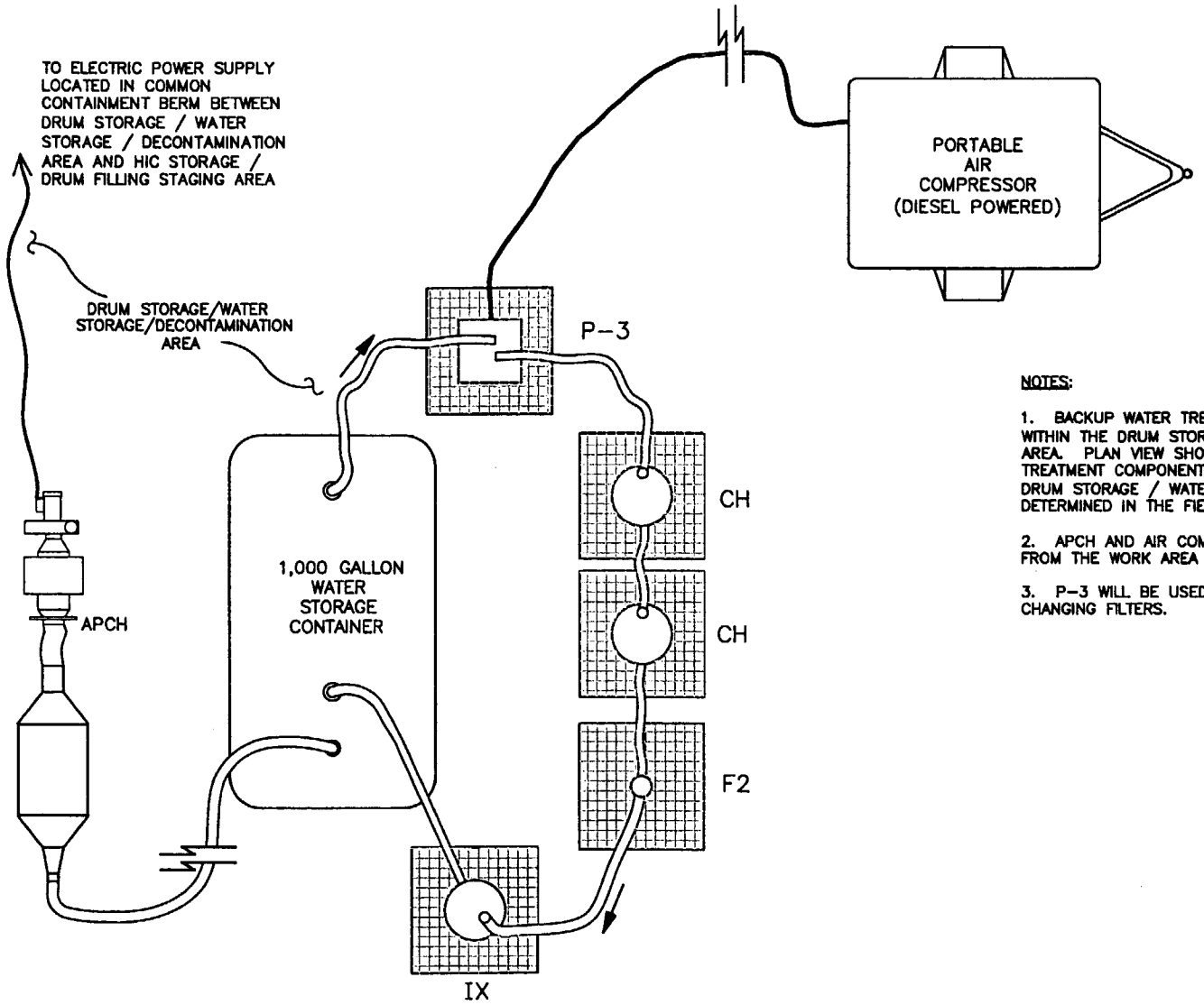

V-TANK BACKUP WATER TREATMENT PLAN VIEW DETAIL (1 / 18|18)

NOT TO SCALE

NOTES:

1. BACKUP WATER TREATMENT OPERATIONS WILL BE CONDUCTED WITHIN THE DRUM STORAGE / WATER STORAGE DECONTAMINATION AREA. PLAN VIEW SHOWS GENERAL RELATIONSHIP BETWEEN TREATMENT COMPONENTS. ACTUAL LOCATION AND ORIENTATION WITHIN DRUM STORAGE / WATER STORAGE DECONTAMINATION AREA WILL BE DETERMINED IN THE FIELD.

2. APCH AND AIR COMPRESSOR MAY BE POSITIONED UP TO 200' FROM THE WORK AREA FOR NOISE CONSIDERATIONS.

3. P-3 WILL BE USED TO PURGE AIR THROUGH HOSES PRIOR TO CHANGING FILTERS.

COMMON LEGEND FOR SHTS. 10 – 18

P1	SLUDGE PUMP (NE-5A BARTLETT MASTER-PUMP)
P2	WATER PUMP (WILDEN T-4)
P3	WATER PUMP (WILDEN T-4)
P4	HIGH PRESSURE PUMP (MCMASTER CARR 3138K26)
P5	METERING PUMP (NE-5A BARTLETT MASTER-PUMP)
LV1	LEVEL SENSOR (FLOWLINE LA21-5001)
LV2	LEVEL SENSOR (MCMASTER CARR PN 46515K81)
LV3	LEVEL SENSOR (MCMASTER CARR PN 46515K81)
PZ1	PRESSURE SENSOR (MCMASTER CARR PN 38915K77)
PZ2	PRESSURE SENSOR (MCMASTER CARR PN 38915K77)
PZ3	PRESSURE GAUGE (MCMASTER CARR PN 3852K125)
TOC	TOC MEASUREMENT PORT
F1	OIL AND GREASE FILTER (BONIFIBERS H IN 55 GAL DRUM)
F2	1 MICRON BAG FILTER (MCMASTER CARR 6835K11-13 & ROSEDALE 8-15-2P-150-S-B-S-B) W/43 GAL/MIN CAPACITY
F3	BARTLETT FILTER, 20 x 2" POLYPROPYLENE ELEMENT (MCMASTER CARR 4411K65) W/8 GAL/MIN CAPACITY/ELEMENT
APCH	CENTRAL HEPA FILTER W/CARBON UNIT (BARTLETT AP-1000-B WITH BARTLETT CH-1000)
CH	GRANULATED ACTIVATED CARBON FILTER (55 GAL) (GENERAL CARBON 8 x 30)
S	STRAINER (TYPICAL, 3/8")
R	RADIO TRANSCEIVING PROCESS DOSIMETER (SAIC MODEL PDE-4)
SLUDGE HIC	DURATEK PL8-120-FP-FEDX WITH BUILT IN FILTER UNIT
DAY TANK	CHEM-TAINER (TRANS-100)
HV	HAND VALVE (MCMASTER CARR 47865K21-28)
WATER HIC	DURATEK PL8-120-MT
1X	ION EXCHANGE RESIN

NOTE: COMPRESSED AIR REQUIRED – 375 CFM @ 125 PSI.

50% REDUCTION

REGISTERED PROFESSIONAL ENGINEER 4596 STATE OF IDAHO BABAK KESHIAN JR 11/16/01

FILTER LINES ARE 1" HOSE FITTINGS ON ALL TANKS, PUMPS, HOSES, & FILTERS, ETC. WILL BE FIBERFLASS REINFORCED NYLON, CAM & GROOVE TYPE

THE INFORMATION CONTAINED IN THIS DOCUMENT IS THE INTELLECTUAL PROPERTY OF ROY F. WESTON, INC. & BARTLETT SERVICES, INC. AND SHALL ONLY BE USED FOR SUBCONTRACT K01-564442 WITH BBWI

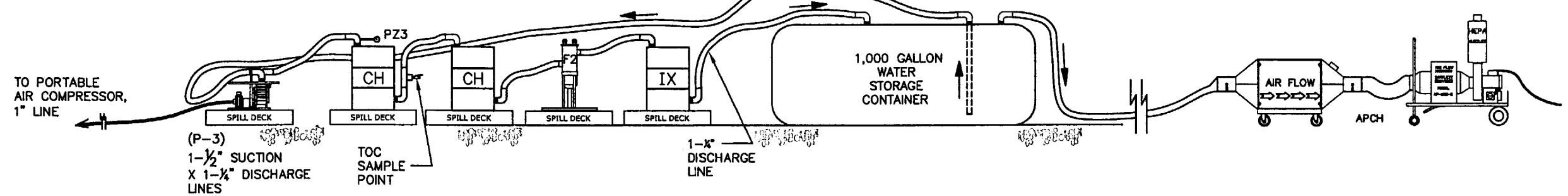

V-TANK BACKUP WATER TREATMENT PROFILE SCHEMATIC DETAIL (2 / 18|18)

NOT TO SCALE

Revisions						
Rev. No.:	Date:	Descriptions:	Drawn By:	Checked By:	Project A/E:	Approval:

		Date
Designed by:	A. Desrosier	11/16/01
Drawn by:	AL	11/16/01
Checked by:	D.Brennecke	11/16/01
Project Manager:	B. Keshian	11/16/01
Client Approval:		

WESTON
6501 AMERICAS PARKWAY
SUITE 800
ALBUQUERQUE, NM 87110
(505) 884-5050

V-TANK REMEDIATION PROJECT
IDAHO FALLS, IDAHO

BACKUP WATER TREATMENT PLAN AND SECTION DETAILS

DRAWING NO.: ABQ 00019-R00-C16

PROJECT NO.: 12393.002.001

ABQ00019_R00_C16.DWG.KDF 11-16-01

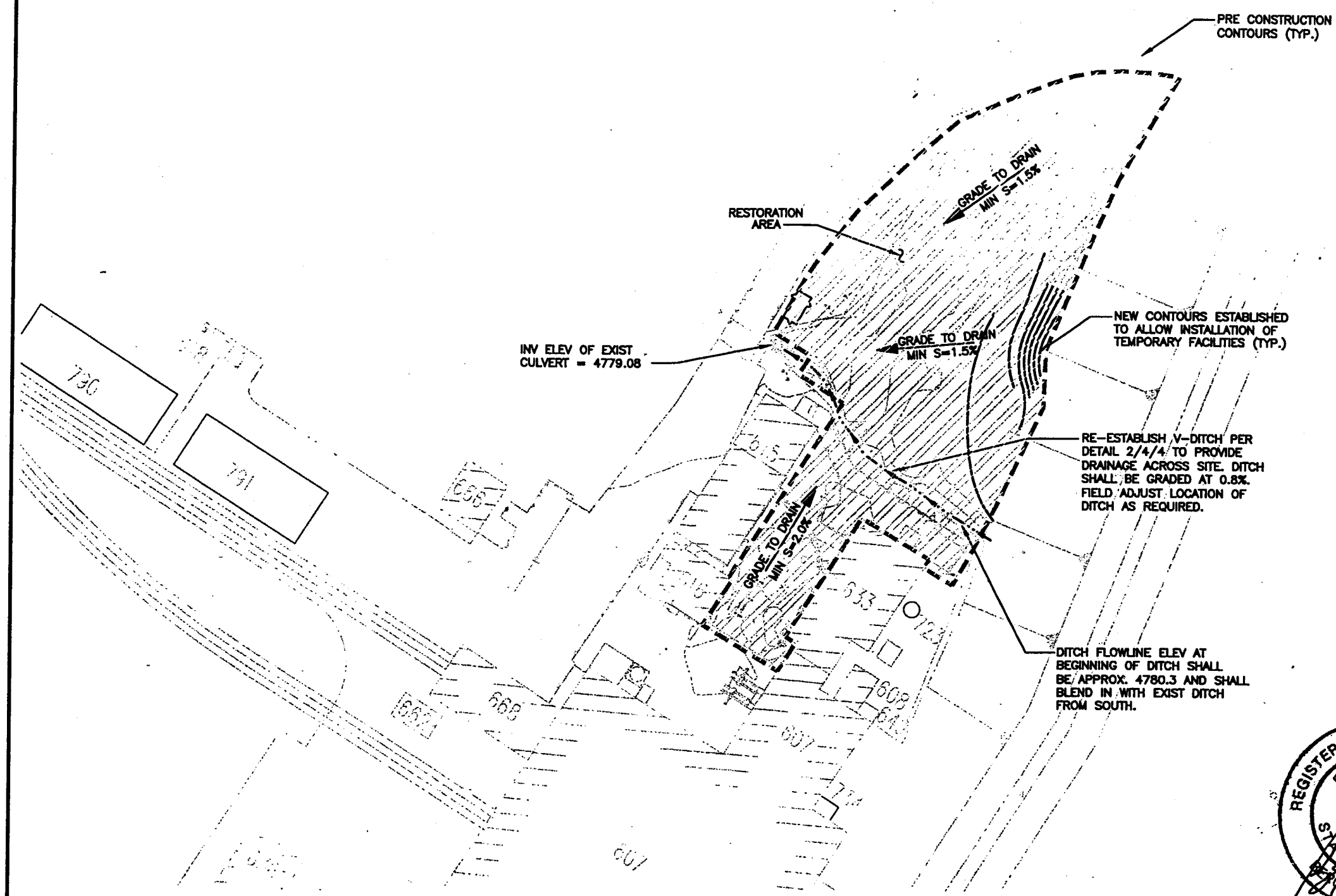

GENERAL NOTES:

1. SITE PLAN REPRESENTS FINAL CONDITION OF SITE AT COMPLETION OF REMEDIAL ACTION PROJECT.
2. ALL TEMPORARY FACILITIES INSTALLED BY THE SUBCONTRACTOR SHALL BE REMOVED
3. ALL ROADBASE MATERIAL PLACED SHALL BE REMOVED AND SITE SHALL BE REGRADED TO DRAIN AS SHOWN ON PLAN.
4. DISTURBED AREAS SHALL BE BACKFILLED AND REGRADED TO GENERALLY MATCH PRE-CONSTRUCTION CONTOURS AND MINIMUM GRADES SHOWN ON DRAWING.
5. ALL DISTURBED AREAS SHALL BE RE-SEEDED PER THE SPECIFICATIONS.
6. BENCHMARK FOR SURVEY CONTROL WILL BE ESTABLISHED BY INEEL PERSONNEL.

REGISTERED PROFESSIONAL ENGINEER 4596 STATE OF IDAHO
B. KESHIAN
11/16/01

50% REDUCTION

40' 20' 0 40'
SCALE: 1" = 40'

Revisions						
Rev. No.:	Date:	Descriptions:	Drawn By:	Checked By:	Project A/E:	Approval:

		Date
Designed by:	R. Ederer	11/16/01
Drawn by:	JMM/KDF	11/16/01
Checked by:	D.Brennecke	11/16/01
Project Manager:	B. Keshian	11/16/01
Client Approval:		

WESTON
MANAGERS DESIGNERS/CONSULTANTS
6501 AMERICAS PARKWAY
SUITE 800
ALBUQUERQUE, NM 87110
(505) 884-5050

V-TANK REMEDIATION PROJECT
IDAHO FALLS, IDAHO

SITE RESTORATION PLAN

DRAWING NO.: ABQ 00009-R00-C17
PROJECT NO.: 12393.002.001
SHEET # 19 OF 20

ABQ00009_R00_C17.DWG.KDF 11-16-01

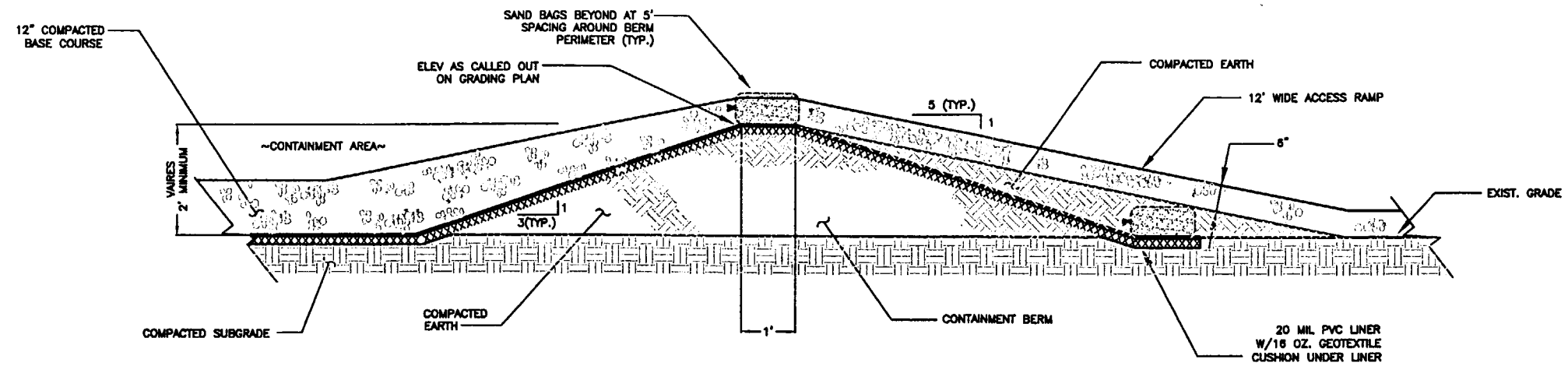

A/5.20 CONTAINMENT BERM / RAMP DETAIL

1'-0" 0 1'-0" 2'-0"

3/4" = 1'-0"

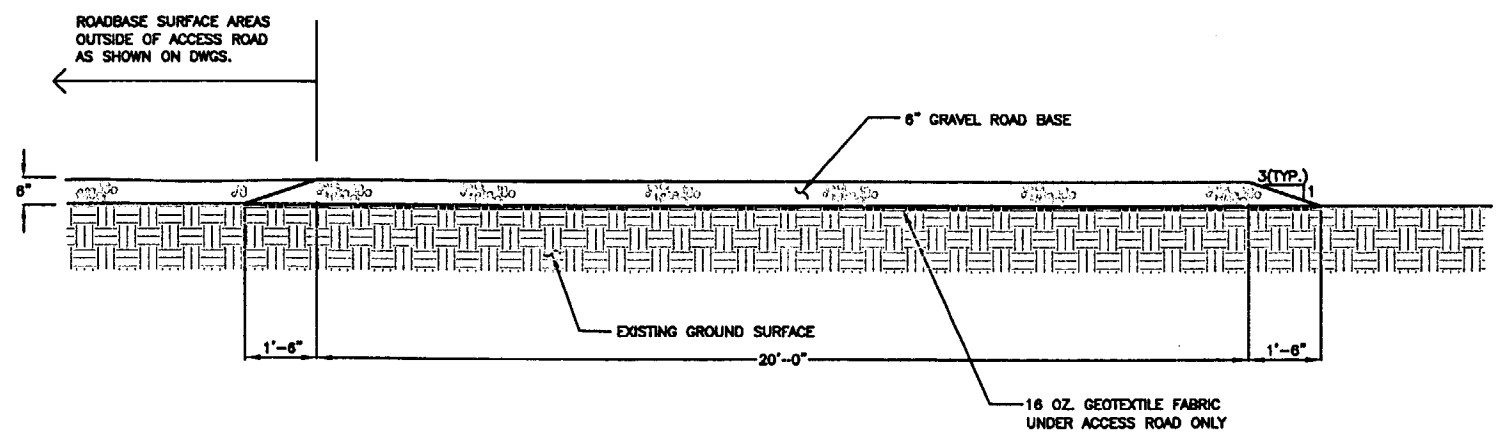

1/5.20 ACCESS ROAD SECTION DETAIL

1'-0" 0 2'-0"

1/2" = 1'-0"

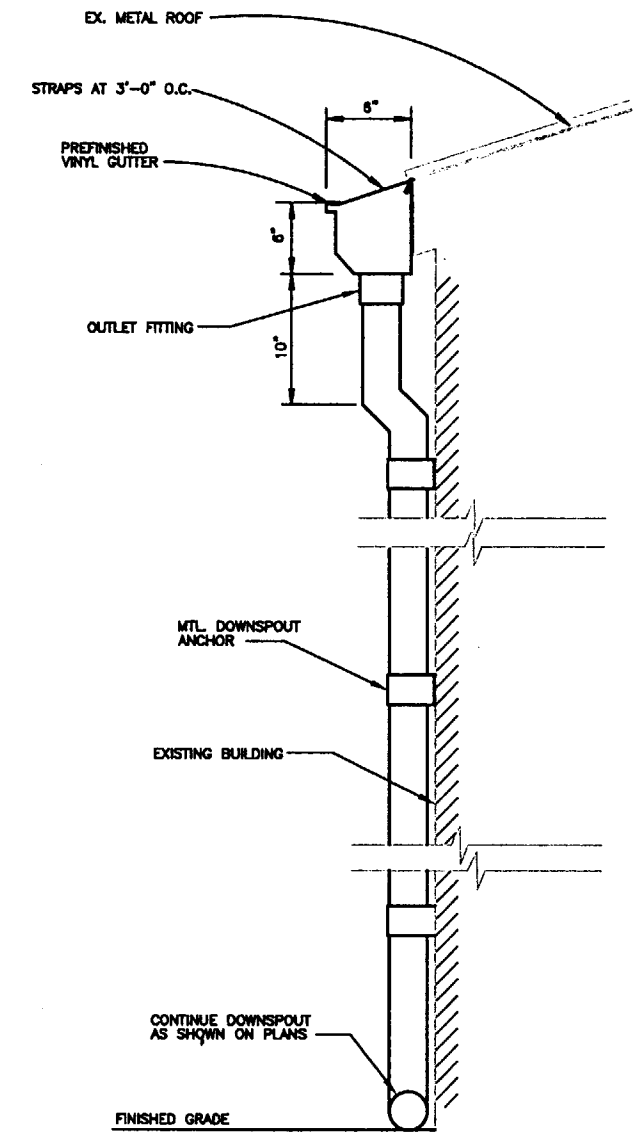

2/4.20 RAIN GUTTER/DOWNSPOUT DETAIL (TYP.)

1'-0" 6" 0 1'-0"

SCALE : 1 1/2 "=1'-0"

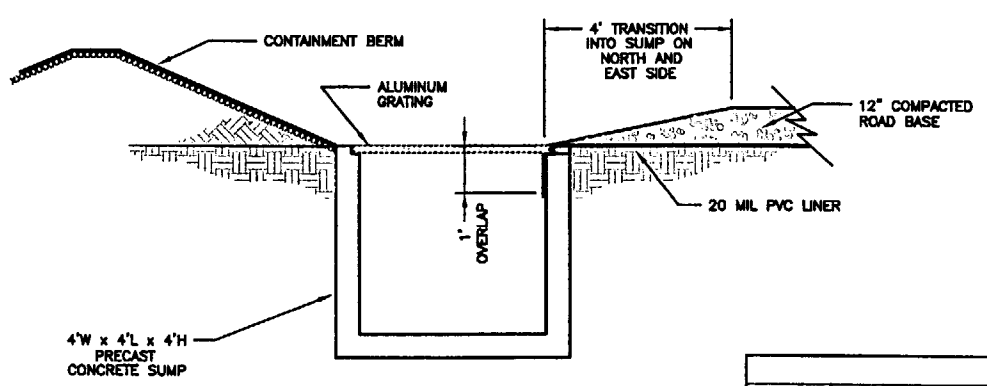

3/4.20 SUMP DETAIL

1'-0" 0 2'-0"

1/2" = 1'-0"

REGISTERED PROFESSIONAL ENGINEER 4596 STATE OF IDAHO BERG KESHIAN, JR. 11/16/01

50% REDUCTION

Revisions						
Rev. No.:	Date:	Descriptions:	Drawn By:	Checked By:	Project A/E:	Approval:

		Date
Designed by:	R. Ederer	11/16/01
Drawn by:	JMM/KDF	11/16/01
Checked by:	D. Brennecke	11/16/01
Project Manager:	B. Keshian	11/16/01
Client Approval:		

WESTON

6501 AMERICAS PARKWAY
SUITE 800
ALBUQUERQUE, NM 87110
(505) 884-5050

V-TANK REMEDIATION PROJECT
IDAHO FALLS, IDAHO

MISCELLANEOUS DETAILS

DRAWING NO.: ABQ 00010-R00-C18

PROJECT NO.: 12393.002.001

SHEET # 20 OF 20

ABQ00010_R00_C18.DWG.KDF 11-16-01