Appendix B

MicroShield Shielding Analyses

MicroShield v5.01 (5.01-00093)

Page : 1
DOS File: TWS55C3.MS5
Run Date: March 13, 2002
Run Time: 9:12:43 AM
Duration: 00:01:30

File Ref: _____
Date: 3/13/02
By: [illegible]
Checked: _____

Case Title: TRU Waste-soil
Description: TRU Waste-Soil 55-gallon drum @ Contact and 3'
Geometry: 7 - Cylinder Volume - Side Shields

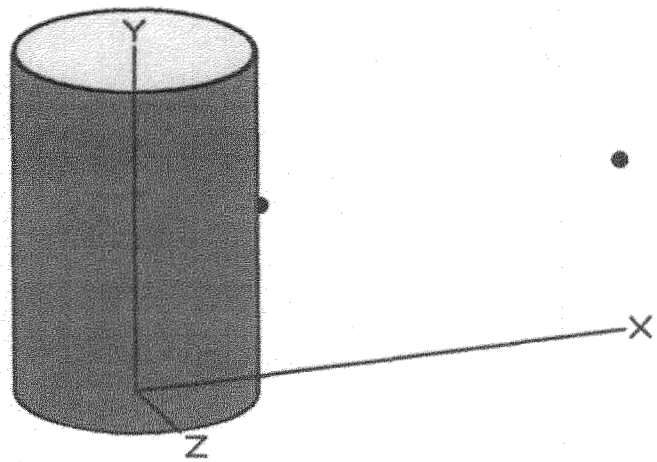

Source Dimensions

Height	83.82 cm	2 ft 9.0 in
Radius	27.94 cm	11.0 in

Dose Points

	X	Y	Z
# 1	31.115 cm	41.91 cm	0 cm
	1 ft 0.2 in	1 ft 4.5 in	0.0 in
# 2	120.015 cm	41.91 cm	0 cm
	3 ft 11.3 in	1 ft 4.5 in	0.0 in

Shields

Shield Name	Dimension	Material	Density
Source	1.25e+04 in³	TRUw-s	2
Shield 1	.25 in	Iron	7.86
Transition		Air	0.00122
Air Gap		Air	0.00122

Source Input
Grouping Method : Standard Indices
Number of Groups : 25
Lower Energy Cutoff : 0.015
Photons < 0.015 : Excluded
Library : Grove

Nuclide	curies	becquerels	µCi/cm³	Bq/cm³
Ac-225	5.0364e-010	1.8635e+001	2.4500e-009	9.0650e-005
Ac-227	1.1429e-010	4.2289e+000	5.5600e-010	2.0572e-005
Ac-228	4.8719e-007	1.8026e+004	2.3700e-006	8.7690e-002
Am-241	2.2407e-001	8.2905e+009	1.0900e+000	4.0330e+004
Am-243	1.6055e-004	5.9402e+006	7.8100e-004	2.8897e+001
At-217	5.0364e-010	1.8635e+001	2.4500e-009	9.0650e-005
Ba-137m	6.6398e-004	2.4567e+007	3.2300e-003	1.1951e+002
Bi-210	6.3314e-006	2.3426e+005	3.0800e-005	1.1396e+000
Bi-211	1.0936e-010	4.0464e+000	5.3200e-010	1.9684e-005
Bi-212	4.3374e-006	1.6049e+005	2.1100e-005	7.8070e-001
Bi-213	5.0364e-010	1.8635e+001	2.4500e-009	9.0650e-005
Bi-214	7.1742e-005	2.6545e+006	3.4900e-004	1.2913e+001
C-14	5.9820e-004	2.2133e+007	2.9100e-003	1.0767e+002
Cl-36	1.3300e-006	4.9210e+004	6.4700e-006	2.3939e-001
Cm-244	5.5914e-002	2.0688e+009	2.7200e-001	1.0064e+004
Co-60	5.7353e-004	2.1221e+007	2.7900e-003	1.0323e+002
Cs-137	7.0098e-004	2.5936e+007	3.4100e-003	1.2617e+002
Fr-221	5.0364e-010	1.8635e+001	2.4500e-009	9.0650e-005
Fr-223	1.5767e-012	5.8337e-002	7.6700e-012	2.8379e-007
I-129	1.8933e-007	7.0051e+003	9.2100e-007	3.4077e-002
Nb-94	1.1984e-003	4.4343e+007	5.8300e-003	2.1571e+002
Ni-59	1.7987e-003	6.6552e+007	8.7500e-003	3.2375e+002
Np-237	3.3713e-006	1.2474e+005	1.6400e-005	6.0680e-001

DOS File: TWS55C3.MS5
Run Date: March 13, 2002
Run Time: 9:12:43 AM
Duration: 00:01:30

Nuclide	curies	becquerels	µCi/cm³	Bq/cm³
Np-239	1.6055e-004	5.9402e+006	7.8100e-004	2.8897e+001
Pa-231	1.4554e-009	5.3850e+001	7.0800e-009	2.6196e-004
Pa-233	3.3713e-006	1.2474e+005	1.6400e-005	6.0680e-001
Pa-234	2.2407e-007	8.2905e+003	1.0900e-006	4.0330e-002
Pa-234m	1.4020e-004	5.1872e+006	6.8200e-004	2.5234e+001
Pb-209	5.0364e-010	1.8635e+001	2.4500e-009	9.0650e-005
Pb-210	6.3725e-006	2.3578e+005	3.1000e-005	1.1470e+000
Pb-211	1.0936e-010	4.0464e+000	5.3200e-010	1.9684e-005
Pb-212	4.3374e-006	1.6049e+005	2.1100e-005	7.8070e-001
Pb-214	7.1742e-005	2.6545e+006	3.4900e-004	1.2913e+001
Po-210	5.2008e-006	1.9243e+005	2.5300e-005	9.3610e-001
Po-211	2.9807e-013	1.1029e-002	1.4500e-012	5.3650e-008
Po-212	2.7751e-006	1.0268e+005	1.3500e-005	4.9950e-001
Po-213	4.9336e-010	1.8254e+001	2.4000e-009	8.8800e-005
Po-214	7.1742e-005	2.6545e+006	3.4900e-004	1.2913e+001
Po-215	1.0936e-010	4.0464e+000	5.3200e-010	1.9684e-005
Po-216	4.3374e-006	1.6049e+005	2.1100e-005	7.8070e-001
Po-218	7.1742e-005	2.6545e+006	3.4900e-004	1.2913e+001
Pu-238	2.0022e-002	7.4082e+008	9.7400e-002	3.6038e+003
Pu-239	7.7704e-002	2.8750e+009	3.7800e-001	1.3986e+004
Pu-240	2.0515e-002	7.5907e+008	9.9800e-002	3.6926e+003
Pu-241	1.0114e+000	3.7421e+010	4.9200e+000	1.8204e+005
Pu-242	1.9775e-005	7.3169e+005	9.6200e-005	3.5594e+000
Ra-223	1.0936e-010	4.0464e+000	5.3200e-010	1.9684e-005
Ra-224	4.3374e-006	1.6049e+005	2.1100e-005	7.8070e-001
Ra-225	5.1186e-010	1.8939e+001	2.4900e-009	9.2130e-005
Ra-226	7.1742e-005	2.6545e+006	3.4900e-004	1.2913e+001
Ra-228	4.8719e-007	1.8026e+004	2.3700e-006	8.7690e-002
Rn-219	1.0936e-010	4.0464e+000	5.3200e-010	1.9684e-005
Rn-220	4.3374e-006	1.6049e+005	2.1100e-005	7.8070e-001
Rn-222	7.1742e-005	2.6545e+006	3.4900e-004	1.2913e+001
Sr-90	5.0364e-001	1.8635e+010	2.4500e+000	9.0650e+004
Tc-99	7.2565e-005	2.6849e+006	3.5300e-004	1.3061e+001
Th-227	1.0957e-010	4.0540e+000	5.3300e-010	1.9721e-005
Th-228	4.3169e-006	1.5972e+005	2.1000e-005	7.7700e-001
Th-229	5.2008e-010	1.9243e+001	2.5300e-009	9.3610e-005
Th-230	3.9674e-008	1.4679e+003	1.9300e-007	7.1410e-003
Th-231	6.6398e-006	2.4567e+005	3.2300e-005	1.1951e+000
Th-232	1.6055e-006	5.9402e+004	7.8100e-006	2.8897e-001
Th-234	1.4020e-004	5.1872e+006	6.8200e-004	2.5234e+001
Tl-207	1.0895e-010	4.0311e+000	5.3000e-010	1.9610e-005
Tl-208	1.5623e-006	5.7805e+004	7.6000e-006	2.8120e-001
Tl-209	1.0895e-011	4.0311e-001	5.3000e-011	1.9610e-006
U-233	1.8090e-006	6.6932e+004	8.8000e-006	3.2560e-001
U-234	8.0993e-005	2.9967e+006	3.9400e-004	1.4578e+001
U-235	6.6398e-006	2.4567e+005	3.2300e-005	1.1951e+000
U-236	3.4329e-006	1.2702e+005	1.6700e-005	6.1790e-001
U-238	1.4020e-004	5.1872e+006	6.8200e-004	2.5234e+001
Y-90	5.0364e-001	1.8635e+010	2.4500e+000	9.0650e+004

Buildup
The material reference is : Source

Integration Parameters

Circumferential	30
Y Direction (axial)	30

Results - Dose Point # 1 - (12.25,16.5,0) in

Energy MeV	Activity photons/sec	Fluence Rate MeV/cm²/sec No Buildup	Fluence Rate MeV/cm²/sec With Buildup	Exposure Rate mR/hr No Buildup	Exposure Rate mR/hr With Buildup
0.015	4.618e+04	1.893e-129	5.033e-28	1.624e-130	4.317e-29
0.02	8.824e+03	1.396e-61	1.688e-28	4.835e-63	5.848e-30
0.03	2.093e+08	9.240e-19	2.702e-18	9.158e-21	2.678e-20
0.04	6.730e+05	7.670e-11	4.233e-10	3.392e-13	1.872e-12
0.05	4.566e+05	5.922e-07	5.168e-06	1.578e-09	1.377e-08
0.06	2.992e+09	3.395e-01	3.747e+00	6.743e-04	7.442e-03
0.08	4.675e+06	2.918e-02	3.417e-01	4.617e-05	5.407e-04
0.1	6.096e+06	2.104e-01	2.218e+00	3.219e-04	3.394e-03
0.15	7.494e+04	1.426e-02	1.123e-01	2.348e-05	1.849e-04
0.2	1.375e+06	5.451e-01	3.542e+00	9.621e-04	6.252e-03
0.3	1.730e+06	1.538e+00	7.852e+00	2.918e-03	1.489e-02
0.4	1.021e+06	1.524e+00	6.633e+00	2.970e-03	1.292e-02
0.5	6.240e+04	1.377e-01	5.311e-01	2.702e-04	1.042e-03
0.6	2.344e+07	7.096e+01	2.485e+02	1.385e-01	4.851e-01
0.8	8.899e+07	4.433e+02	1.345e+03	8.432e-01	2.559e+00
1.0	2.212e+07	1.622e+02	4.428e+02	2.990e-01	8.162e-01
1.5	2.173e+07	3.202e+02	7.344e+02	5.387e-01	1.236e+00
2.0	7.109e+05	1.692e+01	3.500e+01	2.616e-02	5.413e-02
3.0	5.769e+04	2.615e+00	4.757e+00	3.547e-03	6.453e-03
TOTALS:	3.375e+09	1.021e+03	2.836e+03	1.857e+00	5.203e+00

Results - Dose Point # 2 - (47.25,16.5,0) in

Energy MeV	Activity photons/sec	Fluence Rate MeV/cm²/sec No Buildup	Fluence Rate MeV/cm²/sec With Buildup	Exposure Rate mR/hr No Buildup	Exposure Rate mR/hr With Buildup
0.015	4.618e+04	3.873e-130	3.742e-29	3.322e-131	3.209e-30
0.02	8.824e+03	2.227e-62	1.255e-29	7.715e-64	4.348e-31
0.03	2.093e+08	2.327e-19	6.811e-19	2.306e-21	6.750e-21
0.04	6.730e+05	1.838e-11	1.010e-10	8.129e-14	4.466e-13
0.05	4.566e+05	1.253e-07	1.079e-06	3.338e-10	2.875e-09
0.06	2.992e+09	6.401e-02	6.857e-01	1.271e-04	1.362e-03
0.08	4.675e+06	4.539e-03	4.963e-02	7.183e-06	7.854e-05
0.1	6.096e+06	2.884e-02	2.755e-01	4.413e-05	4.215e-04
0.15	7.494e+04	1.680e-03	1.168e-02	2.767e-06	1.924e-05
0.2	1.375e+06	6.054e-02	3.463e-01	1.069e-04	6.112e-04
0.3	1.730e+06	1.622e-01	7.325e-01	3.078e-04	1.390e-03
0.4	1.021e+06	1.564e-01	6.059e-01	3.048e-04	1.181e-03
0.5	6.240e+04	1.386e-02	4.788e-02	2.720e-05	9.399e-05
0.6	2.344e+07	7.035e+00	2.219e+01	1.373e-02	4.331e-02
0.8	8.899e+07	4.291e+01	1.183e+02	8.162e-02	2.251e-01
1.0	2.212e+07	1.541e+01	3.852e+01	2.840e-02	7.100e-02
1.5	2.173e+07	2.943e+01	6.265e+01	4.952e-02	1.054e-01
2.0	7.109e+05	1.523e+00	2.949e+00	2.355e-03	4.561e-03
3.0	5.769e+04	2.295e-01	3.953e-01	3.114e-04	5.363e-04
TOTALS:	3.375e+09	9.703e+01	2.478e+02	1.769e-01	4.551e-01

MicroShield v5.01 (5.01-00093)

Page : 1
DOS File: NTRU55C3.MS5
Run Date: March 13, 2002
Run Time: 8:46:22 AM
Duration: 00:01:30

File Ref: _____
Date: 3/15/02
By: [illegible]
Checked: _____

Case Title: Non-TRU Waste-soil
Description: Non-TRU Waste-Soil 55-gallon drum @ Contact & 3'
Geometry: 7 - Cylinder Volume - Side Shields

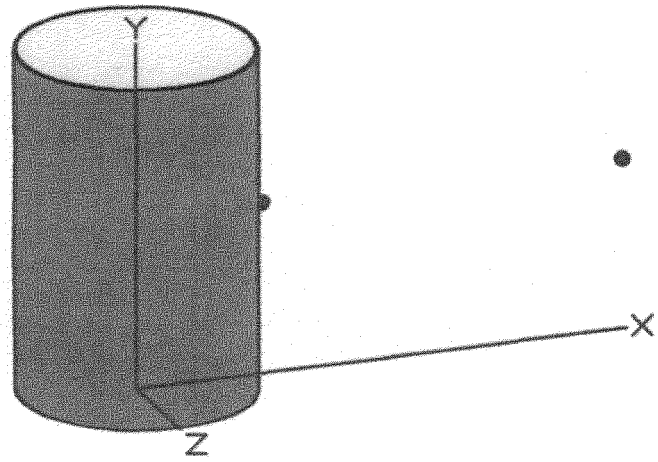

Source Dimensions

Height	83.82 cm	2 ft 9.0 in
Radius	27.94 cm	11.0 in

Dose Points

	X	Y	Z
# 1	31.115 cm	41.91 cm	0 cm
	1 ft 0.2 in	1 ft 4.5 in	0.0 in
# 2	120.015 cm	41.91 cm	0 cm
	3 ft 11.3 in	1 ft 4.5 in	0.0 in

Shields

Shield Name	Dimension	Material	Density
Source	1.25e+04 in³	w-s	2
Shield 1	.25 in	Iron	7.86
Transition		Air	0.00122
Air Gap		Air	0.00122

Source Input
Grouping Method : Standard Indices
Number of Groups : 25
Lower Energy Cutoff : 0.015
Photons < 0.015 : Excluded
Library : Grove

Nuclide	curies	becquerels	uCi/cm³	Bq/cm³
Ac-225	1.3711e-009	5.0732e+001	6.6700e-009	2.4679e-004
Ac-227	3.1040e-010	1.1485e+001	1.5100e-009	5.5870e-005
Ac-228	1.3259e-006	4.9058e+004	6.4500e-006	2.3865e-001
At-217	1.3711e-009	5.0732e+001	6.6700e-009	2.4679e-004
Ba-137m	1.8028e-003	6.6704e+007	8.7700e-003	3.2449e+002
Bi-210	1.7226e-005	6.3738e+005	8.3800e-005	3.1006e+000
Bi-211	2.9807e-010	1.1029e+001	1.4500e-009	5.3650e-005
Bi-212	1.1820e-005	4.3734e+005	5.7500e-005	2.1275e+000
Bi-213	1.3711e-009	5.0732e+001	6.6700e-009	2.4679e-004
Bi-214	1.9529e-004	7.2256e+006	9.5000e-004	3.5150e+001
C-14	1.6301e-003	6.0315e+007	7.9300e-003	2.9341e+002
Cl-36	3.6180e-006	1.3386e+005	1.7600e-005	6.5120e-001
Cm-244	1.5232e-001	5.6360e+009	7.4100e-001	2.7417e+004
Co-60	1.5582e-003	5.7653e+007	7.5800e-003	2.8046e+002
Cs-137	1.9056e-003	7.0507e+007	9.2700e-003	3.4299e+002
Fr-221	1.3711e-009	5.0732e+001	6.6700e-009	2.4679e-004
Fr-223	4.2963e-012	1.5896e-001	2.0900e-011	7.7330e-007
I-129	5.1597e-007	1.9091e+004	2.5100e-006	9.2870e-002
Nb-94	3.2685e-003	1.2093e+008	1.5900e-002	5.8830e+002
Ni-59	4.8925e-003	1.8102e+008	2.3800e-002	8.8060e+002
Np-239	4.3785e-004	1.6201e+007	2.1300e-003	7.8810e+001
Pa-231	3.9674e-009	1.4679e+002	1.9300e-008	7.1410e-004
Pa-233	9.1682e-006	3.3922e+005	4.4600e-005	1.6502e+000

DOS File: NTRU55C3.MS5
Run Date: March 13, 2002
Run Time: 8:46:22 AM
Duration: 00:01:30

Nuclide	curies	becquerels	µCi/cm³	Bq/cm³
Pa-234	6.1053e-007	2.2590e+004	2.9700e-006	1.0989e-001
Pa-234m	3.8235e-004	1.4147e+007	1.8600e-003	6.8820e+001
Pb-209	1.3711e-009	5.0732e+001	6.6700e-009	2.4679e-004
Pb-210	1.7350e-005	6.4194e+005	8.4400e-005	3.1228e+000
Pb-211	2.9807e-010	1.1029e+001	1.4500e-009	5.3650e-005
Pb-212	1.1820e-005	4.3734e+005	5.7500e-005	2.1275e+000
Pb-214	1.9529e-004	7.2256e+006	9.5000e-004	3.5150e+001
Po-210	1.4163e-005	5.2405e+005	6.8900e-005	2.5493e+000
Po-211	8.1198e-013	3.0043e-002	3.9500e-012	1.4615e-007
Po-212	7.5648e-006	2.7990e+005	3.6800e-005	1.3616e+000
Po-213	1.3423e-009	4.9667e+001	6.5300e-009	2.4161e-004
Po-214	1.9529e-004	7.2256e+006	9.5000e-004	3.5150e+001
Po-215	2.9807e-010	1.1029e+001	1.4500e-009	5.3650e-005
Po-216	1.1820e-005	4.3734e+005	5.7500e-005	2.1275e+000
Po-218	1.9529e-004	7.2256e+006	9.5000e-004	3.5150e+001
Pu-241	2.7546e+000	1.0192e+011	1.3400e+001	4.9580e+005
Ra-223	2.9807e-010	1.1029e+001	1.4500e-009	5.3650e-005
Ra-224	1.1820e-005	4.3734e+005	5.7500e-005	2.1275e+000
Ra-225	1.3896e-009	5.1416e+001	6.7600e-009	2.5012e-004
Ra-226	1.9529e-004	7.2256e+006	9.5000e-004	3.5150e+001
Ra-228	1.3259e-006	4.9058e+004	6.4500e-006	2.3865e-001
Rn-219	2.9807e-010	1.1029e+001	1.4500e-009	5.3650e-005
Rn-220	1.1820e-005	4.3734e+005	5.7500e-005	2.1275e+000
Rn-222	1.9529e-004	7.2256e+006	9.5000e-004	3.5150e+001
Sr-90	1.3691e+000	5.0655e+010	6.6600e+000	2.4642e+005
Tc-99	1.9734e-004	7.3017e+006	9.6000e-004	3.5520e+001
Th-227	2.9807e-010	1.1029e+001	1.4500e-009	5.3650e-005
Th-228	1.1758e-005	4.3506e+005	5.7200e-005	2.1164e+000
Th-229	1.4163e-009	5.2405e+001	6.8900e-009	2.5493e-004
Th-230	1.0792e-007	3.9931e+003	5.2500e-007	1.9425e-002
Th-231	1.8069e-005	6.6856e+005	8.7900e-005	3.2523e+000
Th-232	4.3785e-006	1.6201e+005	2.1300e-005	7.8810e-001
Th-234	3.8235e-004	1.4147e+007	1.8600e-003	6.8820e+001
Tl-207	2.9601e-010	1.0953e+001	1.4400e-009	5.3280e-005
Tl-208	4.2552e-006	1.5744e+005	2.0700e-005	7.6590e-001
Tl-209	2.9601e-011	1.0953e+000	1.4400e-010	5.3280e-006
U-233	4.9336e-006	1.8254e+005	2.4000e-005	8.8800e-001
U-234	2.1996e-004	8.1383e+006	1.0700e-003	3.9590e+001
U-235	1.8069e-005	6.6856e+005	8.7900e-005	3.2523e+000
U-236	9.3327e-006	3.4531e+005	4.5400e-005	1.6798e+000
U-238	3.8235e-004	1.4147e+007	1.8600e-003	6.8820e+001
Y-90	1.3691e+000	5.0655e+010	6.6600e+000	2.4642e+005

Buildup
The material reference is : Source

Integration Parameters

Radial	30
Circumferential	30
Y Direction (axial)	30

Results - Dose Point # 1 - (12.25,16.5,0) in

Page : 3
DOS File: NTRU55C3.MS5
Run Date: March 13, 2002
Run Time: 8:46:22 AM
Duration: 00:01:30

Energy MeV	Activity photons/sec	Fluence Rate MeV/cm²/sec No Buildup	Fluence Rate MeV/cm²/sec With Buildup	Exposure Rate mR/hr No Buildup	Exposure Rate mR/hr With Buildup
0.015	1.259e+05	5.162e-129	1.372e-27	4.428e-130	1.177e-28
0.02	2.407e+04	3.807e-61	4.604e-28	1.319e-62	1.595e-29
0.03	4.040e+06	1.784e-20	5.218e-20	1.768e-22	5.171e-22
0.04	9.331e+05	1.063e-10	5.869e-10	4.703e-13	2.595e-12
0.05	1.317e+05	1.708e-07	1.491e-06	4.551e-10	3.971e-09
0.06	2.339e+06	2.653e-04	2.928e-03	5.270e-07	5.816e-06
0.08	1.956e+06	1.221e-02	1.429e-01	1.932e-05	2.262e-04
0.1	1.278e+07	4.412e-01	4.651e+00	6.750e-04	7.116e-03
0.15	1.780e+05	3.387e-02	2.667e-01	5.577e-05	4.392e-04
0.2	3.747e+06	1.485e+00	9.651e+00	2.621e-03	1.703e-02
0.3	4.714e+06	4.192e+00	2.140e+01	7.952e-03	4.059e-02
0.4	2.780e+06	4.149e+00	1.805e+01	8.085e-03	3.518e-02
0.5	1.699e+05	3.748e-01	1.446e+00	7.357e-04	2.838e-03
0.6	6.366e+07	1.927e+02	6.749e+02	3.761e-01	1.317e+00
0.8	2.427e+08	1.209e+03	3.669e+03	2.300e+00	6.979e+00
1.0	6.010e+07	4.407e+02	1.203e+03	8.123e-01	2.218e+00
1.5	5.905e+07	8.700e+02	1.995e+03	1.464e+00	3.357e+00
2.0	1.935e+06	4.605e+01	9.528e+01	7.121e-02	1.473e-01
3.0	1.571e+05	7.121e+00	1.296e+01	9.661e-03	1.758e-02
TOTALS:	4.615e+08	2.776e+03	7.706e+03	5.053e+00	1.414e+01

Results - Dose Point # 2 - (47.25,16.5,0) in

Energy MeV	Activity photons/sec	Fluence Rate MeV/cm²/sec No Buildup	Fluence Rate MeV/cm²/sec With Buildup	Exposure Rate mR/hr No Buildup	Exposure Rate mR/hr With Buildup
0.015	1.259e+05	1.056e-129	1.020e-28	9.060e-131	8.752e-30
0.02	2.407e+04	6.074e-62	3.423e-29	2.104e-63	1.186e-30
0.03	4.040e+06	4.493e-21	1.315e-20	4.453e-23	1.303e-22
0.04	9.331e+05	2.549e-11	1.400e-10	1.127e-13	6.193e-13
0.05	1.317e+05	3.614e-08	3.113e-07	9.627e-11	8.292e-10
0.06	2.339e+06	5.003e-05	5.359e-04	9.937e-08	1.065e-06
0.08	1.956e+06	1.899e-03	2.076e-02	3.005e-06	3.286e-05
0.1	1.278e+07	6.048e-02	5.776e-01	9.252e-05	8.837e-04
0.15	1.780e+05	3.992e-03	2.775e-02	6.573e-06	4.570e-05
0.2	3.747e+06	1.649e-01	9.435e-01	2.911e-04	1.665e-03
0.3	4.714e+06	4.422e-01	1.996e+00	8.387e-04	3.787e-03
0.4	2.780e+06	4.258e-01	1.649e+00	8.297e-04	3.214e-03
0.5	1.699e+05	3.773e-02	1.304e-01	7.406e-05	2.559e-04
0.6	6.366e+07	1.910e+01	6.025e+01	3.729e-02	1.176e-01
0.8	2.427e+08	1.170e+02	3.227e+02	2.226e-01	6.139e-01
1.0	6.010e+07	4.187e+01	1.047e+02	7.717e-02	1.929e-01
1.5	5.905e+07	7.996e+01	1.702e+02	1.345e-01	2.864e-01
2.0	1.935e+06	4.145e+00	8.028e+00	6.409e-03	1.241e-02
3.0	1.571e+05	6.252e-01	1.077e+00	8.482e-04	1.461e-03
TOTALS:	4.615e+08	2.639e+02	6.723e+02	4.810e-01	1.235e+00

MicroShield v5.01 (5.01-00093)

Page : 1
DOS File: TM55C3.MS5
Run Date: March 13, 2002
Run Time: 9:06:48 AM
Duration: 00:01:36

File Ref: _____
Date: 3/13/02
By: [redacted]
Checked: _____

Case Title: TRU Metal
Description: TRU Metal 55-gallon drum @ Contact and 3' (50% loading)
Geometry: 7 - Cylinder Volume - Side Shields

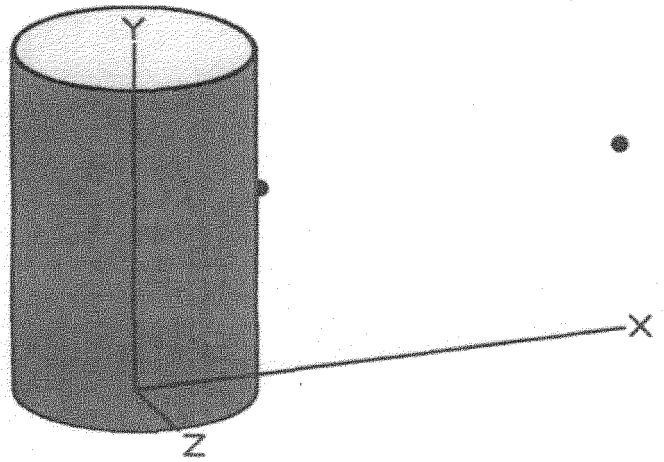

Source Dimensions

Height	83.82 cm	2 ft 9.0 in
Radius	27.94 cm	11.0 in

Dose Points

	X	Y	Z
# 1	31.115 cm	45.72 cm	0 cm
	1 ft 0.2 in	1 ft 6.0 in	0.0 in
# 2	120.015 cm	45.72 cm	0 cm
	3 ft 11.3 in	1 ft 6.0 in	0.0 in

Shields

Shield Name	Dimension	Material	Density
Source	2.06e+05 cm³	Iron	7.86
Shield 1	.635 cm	Iron	7.86
Transition		Air	0.00122
Air Gap		Air	0.00122

Source Input
Grouping Method : Standard Indices
Number of Groups : 25
Lower Energy Cutoff : 0.015
Photons < 0.015 : Excluded
Library : Grove

Nuclide	curies	becquerels	µCi/cm³	Bq/cm³
Ac-225	6.8042e-009	2.5176e+002	3.3100e-008	1.2247e-003
Ac-227	1.5417e-009	5.7044e+001	7.5000e-009	2.7750e-004
Ac-228	6.5781e-006	2.4339e+005	3.2000e-005	1.1840e+000
Am-241	3.0218e+000	1.1181e+011	1.4700e+001	5.4390e+005
Am-243	2.1584e-003	7.9862e+007	1.0500e-002	3.8850e+002
At-217	6.8042e-009	2.5176e+002	3.3100e-008	1.2247e-003
Ba-137m	8.9421e-003	3.3086e+008	4.3500e-002	1.6095e+003
Bi-210	8.5515e-005	3.1641e+006	4.1600e-004	1.5392e+001
Bi-211	1.4739e-009	5.4534e+001	7.1700e-009	2.6529e-004
Bi-212	5.8586e-005	2.1677e+006	2.8500e-004	1.0545e+001
Bi-213	6.8042e-009	2.5176e+002	3.3100e-008	1.2247e-003
Bi-214	9.6821e-004	3.5824e+007	4.7100e-003	1.7427e+002
C-14	8.0787e-003	2.9891e+008	3.9300e-002	1.4541e+003
Cl-36	1.7946e-005	6.6400e+005	8.7300e-005	3.2301e+000
Cm-244	7.5443e-001	2.7914e+010	3.6700e+000	1.3579e+005
Co-60	7.7293e-003	2.8598e+008	3.7600e-002	1.3912e+003
Cs-137	9.4560e-003	3.4987e+008	4.6000e-002	1.7020e+003
Fr-221	6.8042e-009	2.5176e+002	3.3100e-008	1.2247e-003
Fr-223	2.1173e-011	7.8341e-001	1.0300e-010	3.8110e-006
I-129	2.5490e-006	9.4313e+004	1.2400e-005	4.5880e-001
Nb-94	1.6157e-002	5.9783e+008	7.8600e-002	2.9082e+003
Ni-59	2.4257e-002	8.9750e+008	1.1800e-001	4.3660e+003
Np-237	4.5636e-005	1.6885e+006	2.2200e-004	8.2140e+000

DOS File: TM55C3.MS5
Run Date: March 13, 2002
Run Time: 9:06:48 AM
Duration: 00:01:36

Nuclide	curies	becquerels	µCi/cm³	Bq/cm³
Np-239	2.1584e-003	7.9862e+007	1.0500e-002	3.8850e+002
Pa-231	1.9632e-008	7.2637e+002	9.5500e-008	3.5335e-003
Pa-233	4.5430e-005	1.6809e+006	2.2100e-004	8.1770e+000
Pa-234	3.0218e-006	1.1181e+005	1.4700e-005	5.4390e-001
Pa-234m	1.8912e-003	6.9975e+007	9.2000e-003	3.4040e+002
Pb-209	6.8042e-009	2.5176e+002	3.3100e-008	1.2247e-003
Pb-210	8.5926e-005	3.1793e+006	4.1800e-004	1.5466e+001
Pb-211	1.4739e-009	5.4534e+001	7.1700e-009	2.6529e-004
Pb-212	5.8586e-005	2.1677e+006	2.8500e-004	1.0545e+001
Pb-214	9.6821e-004	3.5824e+007	4.7100e-003	1.7427e+002
Po-210	7.0303e-005	2.6012e+006	3.4200e-004	1.2654e+001
Po-211	4.0291e-012	1.4908e-001	1.9600e-011	7.2520e-007
Po-212	3.7618e-005	1.3919e+006	1.8300e-004	6.7710e+000
Po-213	6.6603e-009	2.4643e+002	3.2400e-008	1.1988e-003
Po-214	9.6821e-004	3.5824e+007	4.7100e-003	1.7427e+002
Po-215	1.4739e-009	5.4534e+001	7.1700e-009	2.6529e-004
Po-216	5.8586e-005	2.1677e+006	2.8500e-004	1.0545e+001
Po-218	9.6821e-004	3.5824e+007	4.7100e-003	1.7427e+002
Pu-238	2.6929e-001	9.9638e+009	1.3100e+000	4.8470e+004
Pu-239	1.0484e+000	3.8790e+010	5.1000e+000	1.8870e+005
Pu-240	2.7751e-001	1.0268e+010	1.3500e+000	4.9950e+004
Pu-241	1.3629e+001	5.0427e+011	6.6300e+001	2.4531e+006
Pu-242	2.6724e-004	9.8877e+006	1.3000e-003	4.8100e+001
Ra-223	1.4739e-009	5.4534e+001	7.1700e-009	2.6529e-004
Ra-224	5.8586e-005	2.1677e+006	2.8500e-004	1.0545e+001
Ra-225	6.8864e-009	2.5480e+002	3.3500e-008	1.2395e-003
Ra-226	9.6821e-004	3.5824e+007	4.7100e-003	1.7427e+002
Ra-228	6.5781e-006	2.4339e+005	3.2000e-005	1.1840e+000
Rn-219	1.4739e-009	5.4534e+001	7.1700e-009	2.6529e-004
Rn-220	5.8586e-005	2.1677e+006	2.8500e-004	1.0545e+001
Rn-222	9.6821e-004	3.5824e+007	4.7100e-003	1.7427e+002
Sr-90	6.8042e+000	2.5176e+011	3.3100e+001	1.2247e+006
Tc-99	9.7849e-004	3.6204e+007	4.7600e-003	1.7612e+002
Th-227	1.4780e-009	5.4687e+001	7.1900e-009	2.6603e-004
Th-228	5.8381e-005	2.1601e+006	2.8400e-004	1.0508e+001
Th-229	7.0303e-009	2.6012e+002	3.4200e-008	1.2654e-003
Th-230	5.3447e-007	1.9775e+004	2.6000e-006	9.6200e-002
Th-231	8.9627e-005	3.3162e+006	4.3600e-004	1.6132e+001
Th-232	2.1584e-005	7.9862e+005	1.0500e-004	3.8850e+000
Th-234	1.8912e-003	6.9975e+007	9.2000e-003	3.4040e+002
Tl-207	1.4698e-009	5.4382e+001	7.1500e-009	2.6455e-004
Tl-208	2.0968e-005	7.7580e+005	1.0200e-004	3.7740e+000
Tl-209	1.4677e-010	5.4306e+000	7.1400e-010	2.6418e-005
U-233	2.4462e-005	9.0511e+005	1.1900e-004	4.4030e+000
U-234	1.0916e-003	4.0387e+007	5.3100e-003	1.9647e+002
U-235	8.9627e-005	3.3162e+006	4.3600e-004	1.6132e+001
U-236	4.6252e-005	1.7113e+006	2.2500e-004	8.3250e+000
U-238	1.8912e-003	6.9975e+007	9.2000e-003	3.4040e+002
Y-90	6.8042e+000	2.5176e+011	3.3100e+001	1.2247e+006

Buildup
The material reference is : Source

Integration Parameters

Circumferential	30
Y Direction (axial)	30

Results - Dose Point # 1 - (31.115,45.72,0) cm

Energy MeV	Activity photons/sec	Fluence Rate MeV/cm²/sec No Buildup	Fluence Rate MeV/cm²/sec With Buildup	Exposure Rate mR/hr No Buildup	Exposure Rate mR/hr With Buildup
0.015	6.226e+05	1.739e-136	6.040e-27	1.492e-137	5.181e-28
0.02	1.190e+05	2.565e-64	1.814e-27	8.886e-66	6.284e-29
0.03	2.822e+09	2.169e-19	2.365e-19	2.150e-21	2.344e-21
0.04	9.056e+06	3.857e-11	4.510e-11	1.706e-13	1.995e-13
0.05	6.173e+06	3.972e-07	5.044e-07	1.058e-09	1.344e-09
0.06	4.036e+10	2.836e-01	3.898e-01	5.633e-04	7.742e-04
0.08	6.289e+07	3.630e-02	5.781e-02	5.745e-05	9.148e-05
0.1	8.203e+07	3.581e-01	6.491e-01	5.479e-04	9.931e-04
0.15	1.010e+06	3.734e-02	8.550e-02	6.149e-05	1.408e-04
0.2	1.852e+07	1.687e+00	4.468e+00	2.978e-03	7.885e-03
0.3	2.329e+07	5.318e+00	1.549e+01	1.009e-02	2.939e-02
0.4	1.378e+07	5.460e+00	1.603e+01	1.064e-02	3.124e-02
0.5	8.412e+05	4.996e-01	1.432e+00	9.806e-04	2.810e-03
0.6	3.157e+08	2.592e+02	7.180e+02	5.059e-01	1.401e+00
0.8	1.200e+09	1.635e+03	4.236e+03	3.111e+00	8.057e+00
1.0	2.981e+08	6.019e+02	1.469e+03	1.109e+00	2.708e+00
1.5	2.929e+08	1.200e+03	2.618e+03	2.018e+00	4.405e+00
2.0	9.594e+06	6.340e+01	1.296e+02	9.805e-02	2.004e-01
3.0	7.743e+05	9.589e+00	1.790e+01	1.301e-02	2.429e-02
TOTALS:	4.551e+10	3.783e+03	9.227e+03	6.881e+00	1.687e+01

Results - Dose Point # 2 - (120.015,45.72,0) cm

Energy MeV	Activity photons/sec	Fluence Rate MeV/cm²/sec No Buildup	Fluence Rate MeV/cm²/sec With Buildup	Exposure Rate mR/hr No Buildup	Exposure Rate mR/hr With Buildup
0.015	6.226e+05	3.923e-137	4.496e-28	3.365e-138	3.857e-29
0.02	1.190e+05	4.078e-65	1.350e-28	1.413e-66	4.677e-30
0.03	2.822e+09	5.127e-20	5.589e-20	5.081e-22	5.539e-22
0.04	9.056e+06	9.558e-12	1.117e-11	4.227e-14	4.941e-14
0.05	6.173e+06	8.477e-08	1.075e-07	2.258e-10	2.863e-10
0.06	4.036e+10	5.363e-02	7.343e-02	1.065e-04	1.459e-04
0.08	6.289e+07	5.711e-03	8.999e-03	9.038e-06	1.424e-05
0.1	8.203e+07	4.985e-02	8.853e-02	7.626e-05	1.354e-04
0.15	1.010e+06	4.485e-03	9.869e-03	7.385e-06	1.625e-05
0.2	1.852e+07	1.913e-01	4.798e-01	3.376e-04	8.468e-04
0.3	2.329e+07	5.742e-01	1.566e+00	1.089e-03	2.970e-03
0.4	1.378e+07	5.750e-01	1.575e+00	1.120e-03	3.068e-03
0.5	8.412e+05	5.172e-02	1.382e-01	1.015e-04	2.712e-04
0.6	3.157e+08	2.648e+01	6.844e+01	5.169e-02	1.336e-01
0.8	1.200e+09	1.637e+02	3.969e+02	3.114e-01	7.549e-01
1.0	2.981e+08	5.930e+01	1.360e+02	1.093e-01	2.507e-01
1.5	2.929e+08	1.150e+02	2.375e+02	1.934e-01	3.997e-01
2.0	9.594e+06	5.973e+00	1.161e+01	9.236e-03	1.796e-02
3.0	7.743e+05	8.857e-01	1.584e+00	1.202e-03	2.149e-03
TOTALS:	4.551e+10	3.728e+02	8.560e+02	6.791e-01	1.566e+00

MicroShield v5.01 (5.01-00093)

Page : 1
DOS File: TWSB25C3.MS5
Run Date: March 13, 2002
Run Time: 9:19:31 AM
Duration: 00:01:28

File Ref: _____
Date: 3/13/02
By: [illegible]
Checked: _____

Case Title: TWSB25C
Description: Tru Waste Soil B-25 Waste Bin @ Contact and 3'
Geometry: 13 - Rectangular Volume

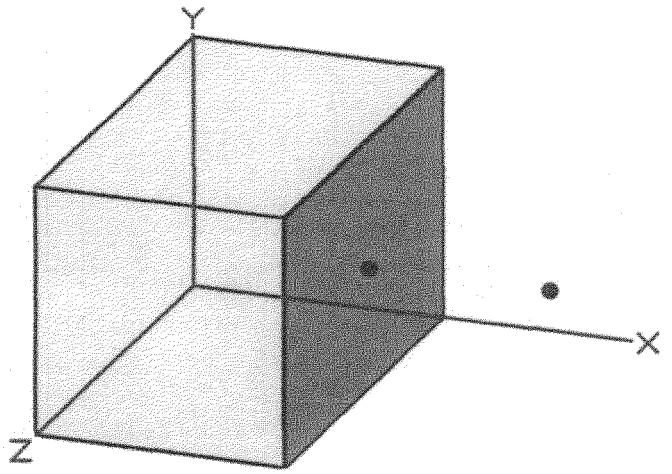

Source Dimensions

Length	121.92 cm	4 ft
Width	213.36 cm	7 ft 0.0 in
Height	121.92 cm	4 ft

Dose Points

	X	Y	Z
# 1	125.095 cm 4 ft 1.2 in	60.96 cm 2 ft	106.68 cm 3 ft 6.0 in
# 2	213.995 cm 7 ft 0.3 in	60.96 cm 2 ft	106.68 cm 3 ft 6.0 in

Shields

Shield Name	Dimension	Material	Density
Source	1.94e+05 in³	TRUw-s	2
Shield 1	.25 in	Iron	7.86
Air Gap		Air	0.00122

Source Input
Grouping Method : Standard Indices
Number of Groups : 25
Lower Energy Cutoff : 0.015
Photons < 0.015 : Excluded
Library : Grove

Nuclide	curies	becquerels	uCi/cm³	Bq/cm³
Ac-225	7.7701e-009	2.8750e+002	2.4500e-009	9.0650e-005
Ac-227	1.7633e-009	6.5244e+001	5.5600e-010	2.0572e-005
Ac-228	7.5164e-006	2.7811e+005	2.3700e-006	8.7690e-002
Am-241	3.4569e+000	1.2791e+011	1.0900e+000	4.0330e+004
Am-243	2.4769e-003	9.1646e+007	7.8100e-004	2.8897e+001
At-217	7.7701e-009	2.8750e+002	2.4500e-009	9.0650e-005
Ba-137m	1.0244e-002	3.7902e+008	3.2300e-003	1.1951e+002
Bi-210	9.7682e-005	3.6142e+006	3.0800e-005	1.1396e+000
Bi-211	1.6872e-009	6.2428e+001	5.3200e-010	1.9684e-005
Bi-212	6.6918e-005	2.4760e+006	2.1100e-005	7.8070e-001
Bi-213	7.7701e-009	2.8750e+002	2.4500e-009	9.0650e-005
Bi-214	1.1068e-003	4.0953e+007	3.4900e-004	1.2913e+001
C-14	9.2290e-003	3.4147e+008	2.9100e-003	1.0767e+002
Cl-36	2.0520e-005	7.5922e+005	6.4700e-006	2.3939e-001
Cm-244	8.6264e-001	3.1918e+010	2.7200e-001	1.0064e+004
Co-60	8.8484e-003	3.2739e+008	2.7900e-003	1.0323e+002
Cs-137	1.0815e-002	4.0015e+008	3.4100e-003	1.2617e+002
Fr-221	7.7701e-009	2.8750e+002	2.4500e-009	9.0650e-005
Fr-223	2.4325e-011	9.0004e-001	7.6700e-012	2.8379e-007
I-129	2.9209e-006	1.0807e+005	9.2100e-007	3.4077e-002
Nb-94	1.8490e-002	6.8412e+008	5.8300e-003	2.1571e+002
Ni-59	2.7751e-002	1.0268e+009	8.7500e-003	3.2375e+002
Np-237	5.2012e-005	1.9245e+006	1.6400e-005	6.0680e-001

DOS File: TWSB25C3.MS5
Run Date: March 13, 2002
Run Time: 9:19:31 AM
Duration: 00:01:28

Nuclide	curies	becquerels	µCi/cm³	Bq/cm³
Np-239	2.4769e-003	9.1646e+007	7.8100e-004	2.8897e+001
Pa-231	2.2454e-008	8.3080e+002	7.0800e-009	2.6196e-004
Pa-233	5.2012e-005	1.9245e+006	1.6400e-005	6.0680e-001
Pa-234	3.4569e-006	1.2791e+005	1.0900e-006	4.0330e-002
Pa-234m	2.1630e-003	8.0029e+007	6.8200e-004	2.5234e+001
Pb-209	7.7701e-009	2.8750e+002	2.4500e-009	9.0650e-005
Pb-210	9.8316e-005	3.6377e+006	3.1000e-005	1.1470e+000
Pb-211	1.6872e-009	6.2428e+001	5.3200e-010	1.9684e-005
Pb-212	6.6918e-005	2.4760e+006	2.1100e-005	7.8070e-001
Pb-214	1.1068e-003	4.0953e+007	3.4900e-004	1.2913e+001
Po-210	8.0239e-005	2.9688e+006	2.5300e-005	9.3610e-001
Po-211	4.5987e-012	1.7015e-001	1.4500e-012	5.3650e-008
Po-212	4.2815e-005	1.5842e+006	1.3500e-005	4.9950e-001
Po-213	7.6116e-009	2.8163e+002	2.4000e-009	8.8800e-005
Po-214	1.1068e-003	4.0953e+007	3.4900e-004	1.2913e+001
Po-215	1.6872e-009	6.2428e+001	5.3200e-010	1.9684e-005
Po-216	6.6918e-005	2.4760e+006	2.1100e-005	7.8070e-001
Po-218	1.1068e-003	4.0953e+007	3.4900e-004	1.2913e+001
Pu-238	3.0890e-001	1.1429e+010	9.7400e-002	3.6038e+003
Pu-239	1.1988e+000	4.4356e+010	3.7800e-001	1.3986e+004
Pu-240	3.1651e-001	1.1711e+010	9.9800e-002	3.6926e+003
Pu-241	1.5604e+001	5.7734e+011	4.9200e+000	1.8204e+005
Pu-242	3.0510e-004	1.1289e+007	9.6200e-005	3.5594e+000
Ra-223	1.6872e-009	6.2428e+001	5.3200e-010	1.9684e-005
Ra-224	6.6918e-005	2.4760e+006	2.1100e-005	7.8070e-001
Ra-225	7.8970e-009	2.9219e+002	2.4900e-009	9.2130e-005
Ra-226	1.1068e-003	4.0953e+007	3.4900e-004	1.2913e+001
Ra-228	7.5164e-006	2.7811e+005	2.3700e-006	8.7690e-002
Rn-219	1.6872e-009	6.2428e+001	5.3200e-010	1.9684e-005
Rn-220	6.6918e-005	2.4760e+006	2.1100e-005	7.8070e-001
Rn-222	1.1068e-003	4.0953e+007	3.4900e-004	1.2913e+001
Sr-90	7.7701e+000	2.8750e+011	2.4500e+000	9.0650e+004
Tc-99	1.1195e-003	4.1423e+007	3.5300e-004	1.3061e+001
Th-227	1.6904e-009	6.2545e+001	5.3300e-010	1.9721e-005
Th-228	6.6601e-005	2.4642e+006	2.1000e-005	7.7700e-001
Th-229	8.0239e-009	2.9688e+002	2.5300e-009	9.3610e-005
Th-230	6.1210e-007	2.2648e+004	1.9300e-007	7.1410e-003
Th-231	1.0244e-004	3.7902e+006	3.2300e-005	1.1951e+000
Th-232	2.4769e-005	9.1646e+005	7.8100e-006	2.8897e-001
Th-234	2.1630e-003	8.0029e+007	6.8200e-004	2.5234e+001
Tl-207	1.6809e-009	6.2193e+001	5.3000e-010	1.9610e-005
Tl-208	2.4103e-005	8.9182e+005	7.6000e-006	2.8120e-001
Tl-209	1.6809e-010	6.2193e+000	5.3000e-011	1.9610e-006
U-233	2.7909e-005	1.0326e+006	8.8000e-006	3.2560e-001
U-234	1.2496e-003	4.6234e+007	3.9400e-004	1.4578e+001
U-235	1.0244e-004	3.7902e+006	3.2300e-005	1.1951e+000
U-236	5.2964e-005	1.9597e+006	1.6700e-005	6.1790e-001
U-238	2.1630e-003	8.0029e+007	6.8200e-004	2.5234e+001
Y-90	7.7701e+000	2.8750e+011	2.4500e+000	9.0650e+004

Buildup
The material reference is : Source

Integration Parameters

Y Direction	30
Z Direction	30

Results - Dose Point # 1 - (49.25,24.42) in

Energy MeV	Activity photons/sec	Fluence Rate MeV/cm²/sec No Buildup	Fluence Rate MeV/cm²/sec With Buildup	Exposure Rate mR/hr No Buildup	Exposure Rate mR/hr With Buildup
0.015	7.125e+05	1.942e-131	1.586e-27	1.665e-132	1.360e-28
0.02	1.361e+05	4.830e-62	5.320e-28	1.673e-63	1.843e-29
0.03	3.229e+09	1.352e-18	3.956e-18	1.340e-20	3.921e-20
0.04	1.038e+07	9.496e-11	5.201e-10	4.200e-13	2.300e-12
0.05	7.044e+06	6.581e-07	5.715e-06	1.753e-09	1.522e-08
0.06	4.617e+10	3.740e-01	4.138e+00	7.429e-04	8.218e-03
0.08	7.212e+07	3.275e-02	3.863e-01	5.183e-05	6.114e-04
0.1	9.404e+07	2.393e-01	2.550e+00	3.661e-04	3.902e-03
0.15	1.156e+06	1.653e-02	1.329e-01	2.722e-05	2.188e-04
0.2	2.122e+07	6.386e-01	4.260e+00	1.127e-03	7.518e-03
0.3	2.669e+07	1.822e+00	9.605e+00	3.456e-03	1.822e-02
0.4	1.576e+07	1.818e+00	8.201e+00	3.542e-03	1.598e-02
0.5	9.627e+05	1.651e-01	6.622e-01	3.241e-04	1.300e-03
0.6	3.616e+08	8.555e+01	3.123e+02	1.670e-01	6.095e-01
0.8	1.373e+09	5.394e+02	1.714e+03	1.026e+00	3.259e+00
1.0	3.413e+08	1.991e+02	5.713e+02	3.670e-01	1.053e+00
1.5	3.353e+08	4.012e+02	9.757e+02	6.751e-01	1.642e+00
2.0	1.097e+07	2.160e+01	4.770e+01	3.340e-02	7.377e-02
3.0	8.900e+05	3.445e+00	6.745e+00	4.673e-03	9.151e-03
TOTALS:	5.207e+10	1.255e+03	3.657e+03	2.283e+00	6.702e+00

Results - Dose Point # 2 - (84.25,24.42) in

Energy MeV	Activity photons/sec	Fluence Rate MeV/cm²/sec No Buildup	Fluence Rate MeV/cm²/sec With Buildup	Exposure Rate mR/hr No Buildup	Exposure Rate mR/hr With Buildup
0.015	7.125e+05	6.027e-130	3.370e-28	5.169e-131	2.891e-29
0.02	1.361e+05	8.610e-62	1.131e-28	2.982e-63	3.916e-30
0.03	3.229e+09	1.003e-18	2.937e-18	9.943e-21	2.910e-20
0.04	1.038e+07	8.361e-11	4.606e-10	3.698e-13	2.037e-12
0.05	7.044e+06	6.145e-07	5.337e-06	1.637e-09	1.422e-08
0.06	4.617e+10	3.315e-01	3.593e+00	6.585e-04	7.136e-03
0.08	7.212e+07	2.439e-02	2.674e-01	3.860e-05	4.231e-04
0.1	9.404e+07	1.541e-01	1.452e+00	2.358e-04	2.221e-03
0.15	1.156e+06	8.719e-03	5.857e-02	1.436e-05	9.645e-05
0.2	2.122e+07	3.090e-01	1.702e+00	5.454e-04	3.004e-03
0.3	2.669e+07	8.157e-01	3.554e+00	1.547e-03	6.741e-03
0.4	1.576e+07	7.802e-01	2.927e+00	1.520e-03	5.704e-03
0.5	9.627e+05	6.875e-02	2.310e-01	1.349e-04	4.535e-04
0.6	3.616e+08	3.476e+01	1.070e+02	6.785e-02	2.089e-01
0.8	1.373e+09	2.108e+02	5.713e+02	4.010e-01	1.087e+00
1.0	3.413e+08	7.543e+01	1.864e+02	1.390e-01	3.435e-01
1.5	3.353e+08	1.435e+02	3.057e+02	2.415e-01	5.143e-01
2.0	1.097e+07	7.434e+00	1.454e+01	1.150e-02	2.248e-02
3.0	8.900e+05	1.129e+00	1.987e+00	1.532e-03	2.696e-03
TOTALS:	5.207e+10	4.756e+02	1.201e+03	8.671e-01	2.204e+00

MicroShield v5.01 (5.01-00093)

Page : 1
DOS File: NTRU25C3.MS5
Run Date: March 13, 2002
Run Time: 9:24:48 AM
Duration: 00:01:28

File Ref: _____
Date: 3/13/02
By: [illegible]
Checked: _____

Case Title: NonTRUWSB25C
Description: Non-Tru Waste Soil B-25 Waste Bin @ Contact and 3'
Geometry: 13 - Rectangular Volume

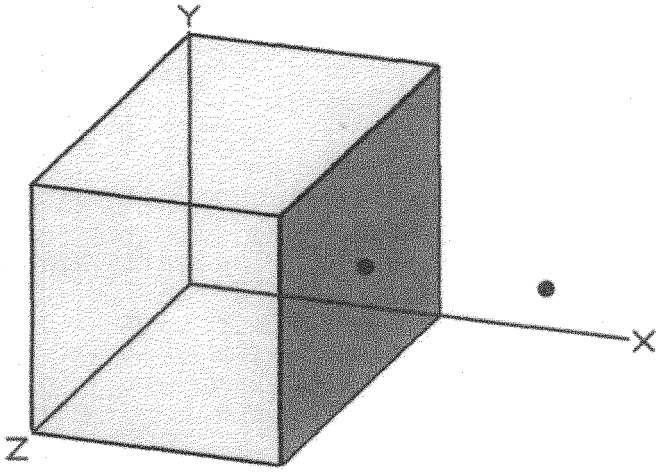

Source Dimensions

Length	121.92 cm	4 ft
Width	213.36 cm	7 ft 0.0 in
Height	121.92 cm	4 ft

Dose Points

	X	Y	Z
# 1	125.095 cm	60.96 cm	106.68 cm
	4 ft 1.2 in	2 ft	3 ft 6.0 in
# 2	213.995 cm	60.96 cm	106.68 cm
	7 ft 0.3 in	2 ft	3 ft 6.0 in

Shields

Shield Name	Dimension	Material	Density
Source	1.94e+05 in³	w-s	2
Shield 1	.25 in	Iron	7.86
Air Gap		Air	0.00122

Source Input
Grouping Method : Standard Indices
Number of Groups : 25
Lower Energy Cutoff : 0.015
Photons < 0.015 : Excluded
Library : Grove

Nuclide	curies	becquerels	uCi/cm³	Bq/cm³
Ac-225	2.1154e-008	7.8269e+002	6.6700e-009	2.4679e-004
Ac-227	4.7889e-009	1.7719e+002	1.5100e-009	5.5870e-005
Ac-228	2.0456e-005	7.5688e+005	6.4500e-006	2.3865e-001
At-217	2.1154e-008	7.8269e+002	6.6700e-009	2.4679e-004
Ba-137m	2.7814e-002	1.0291e+009	8.7700e-003	3.2449e+002
Bi-210	2.6577e-004	9.8335e+006	8.3800e-005	3.1006e+000
Bi-211	4.5987e-009	1.7015e+002	1.4500e-009	5.3650e-005
Bi-212	1.8236e-004	6.7473e+006	5.7500e-005	2.1275e+000
Bi-213	2.1154e-008	7.8269e+002	6.6700e-009	2.4679e-004
Bi-214	3.0129e-003	1.1148e+008	9.5000e-004	3.5150e+001
C-14	2.5150e-002	9.3055e+008	7.9300e-003	2.9341e+002
Cl-36	5.5818e-005	2.0653e+006	1.7600e-005	6.5120e-001
Cm-244	2.3501e+000	8.6953e+010	7.4100e-001	2.7417e+004
Co-60	2.4040e-002	8.8948e+008	7.5800e-003	2.8046e+002
Cs-137	2.9400e-002	1.0878e+009	9.2700e-003	3.4299e+002
Fr-221	2.1154e-008	7.8269e+002	6.6700e-009	2.4679e-004
Fr-223	6.6284e-011	2.4525e+000	2.0900e-011	7.7330e-007
I-129	7.9604e-006	2.9454e+005	2.5100e-006	9.2870e-002
Nb-94	5.0427e-002	1.8658e+009	1.5900e-002	5.8830e+002
Ni-59	7.5481e-002	2.7928e+009	2.3800e-002	8.8060e+002
Np-239	6.7553e-003	2.4994e+008	2.1300e-003	7.8810e+001
Pa-231	6.1210e-008	2.2648e+003	1.9300e-008	7.1410e-004
Pa-233	1.4145e-004	5.2336e+006	4.4600e-005	1.6502e+000

DOS File: NTRU25C3.MS5
Run Date: March 13, 2002
Run Time: 9:24:48 AM
Duration: 00:01:28

Nuclide	curies	becquerels	µCi/cm³	Bq/cm³
Pa-234	9.4193e-006	3.4851e+005	2.9700e-006	1.0989e-001
Pa-234m	5.8990e-003	2.1826e+008	1.8600e-003	6.8820e+001
Pb-209	2.1154e-008	7.8269e+002	6.6700e-009	2.4679e-004
Pb-210	2.6767e-004	9.9039e+006	8.4400e-005	3.1228e+000
Pb-211	4.5987e-009	1.7015e+002	1.4500e-009	5.3650e-005
Pb-212	1.8236e-004	6.7473e+006	5.7500e-005	2.1275e+000
Pb-214	3.0129e-003	1.1148e+008	9.5000e-004	3.5150e+001
Po-210	2.1852e-004	8.0851e+006	6.8900e-005	2.5493e+000
Po-211	1.2527e-011	4.6351e-001	3.9500e-012	1.4615e-007
Po-212	1.1671e-004	4.3183e+006	3.6800e-005	1.3616e+000
Po-213	2.0710e-008	7.6626e+002	6.5300e-009	2.4161e-004
Po-214	3.0129e-003	1.1148e+008	9.5000e-004	3.5150e+001
Po-215	4.5987e-009	1.7015e+002	1.4500e-009	5.3650e-005
Po-216	1.8236e-004	6.7473e+006	5.7500e-005	2.1275e+000
Po-218	3.0129e-003	1.1148e+008	9.5000e-004	3.5150e+001
Pu-241	4.2498e+001	1.5724e+012	1.3400e+001	4.9580e+005
Ra-223	4.5987e-009	1.7015e+002	1.4500e-009	5.3650e-005
Ra-224	1.8236e-004	6.7473e+006	5.7500e-005	2.1275e+000
Ra-225	2.1439e-008	7.9325e+002	6.7600e-009	2.5012e-004
Ra-226	3.0129e-003	1.1148e+008	9.5000e-004	3.5150e+001
Ra-228	2.0456e-005	7.5688e+005	6.4500e-006	2.3865e-001
Rn-219	4.5987e-009	1.7015e+002	1.4500e-009	5.3650e-005
Rn-220	1.8236e-004	6.7473e+006	5.7500e-005	2.1275e+000
Rn-222	3.0129e-003	1.1148e+008	9.5000e-004	3.5150e+001
Sr-90	2.1122e+001	7.8152e+011	6.6600e+000	2.4642e+005
Tc-99	3.0446e-003	1.1265e+008	9.6000e-004	3.5520e+001
Th-227	4.5987e-009	1.7015e+002	1.4500e-009	5.3650e-005
Th-228	1.8141e-004	6.7121e+006	5.7200e-005	2.1164e+000
Th-229	2.1852e-008	8.0851e+002	6.8900e-009	2.5493e-004
Th-230	1.6650e-006	6.1606e+004	5.2500e-007	1.9425e-002
Th-231	2.7877e-004	1.0315e+007	8.7900e-005	3.2523e+000
Th-232	6.7553e-005	2.4994e+006	2.1300e-005	7.8810e-001
Th-234	5.8990e-003	2.1826e+008	1.8600e-003	6.8820e+001
Tl-207	4.5669e-009	1.6898e+002	1.4400e-009	5.3280e-005
Tl-208	6.5650e-005	2.4290e+006	2.0700e-005	7.6590e-001
Tl-209	4.5669e-010	1.6898e+001	1.4400e-010	5.3280e-006
U-233	7.6116e-005	2.8163e+006	2.4000e-005	8.8800e-001
U-234	3.3935e-003	1.2556e+008	1.0700e-003	3.9590e+001
U-235	2.7877e-004	1.0315e+007	8.7900e-005	3.2523e+000
U-236	1.4399e-004	5.3275e+006	4.5400e-005	1.6798e+000
U-238	5.8990e-003	2.1826e+008	1.8600e-003	6.8820e+001
Y-90	2.1122e+001	7.8152e+011	6.6600e+000	2.4642e+005

Buildup
The material reference is : Source

Integration Parameters

X Direction	30
Y Direction	30
Z Direction	30

Results - Dose Point # 1 - (49.25,24.42) in

Page : 3
DOS File: NTRU25C3.MS5
Run Date: March 13, 2002
Run Time: 9:24:48 AM
Duration: 00:01:28

Energy MeV	Activity photons/sec	Fluence Rate MeV/cm²/sec No Buildup	Fluence Rate MeV/cm²/sec With Buildup	Exposure Rate mR/hr No Buildup	Exposure Rate mR/hr With Buildup
0.015	1.943e+06	5.295e-131	4.325e-27	4.542e-132	3.710e-28
0.02	3.713e+05	1.317e-61	1.451e-27	4.563e-63	5.026e-29
0.03	6.233e+07	2.610e-20	7.638e-20	2.586e-22	7.570e-22
0.04	1.440e+07	1.317e-10	7.212e-10	5.823e-13	3.189e-12
0.05	2.032e+06	1.898e-07	1.648e-06	5.057e-10	4.391e-09
0.06	3.608e+07	2.923e-04	3.234e-03	5.806e-07	6.423e-06
0.08	3.017e+07	1.370e-02	1.616e-01	2.168e-05	2.558e-04
0.1	1.972e+08	5.017e-01	5.348e+00	7.676e-04	8.181e-03
0.15	2.746e+06	3.927e-02	3.156e-01	6.466e-05	5.197e-04
0.2	5.781e+07	1.740e+00	1.161e+01	3.071e-03	2.048e-02
0.3	7.273e+07	4.965e+00	2.618e+01	9.418e-03	4.966e-02
0.4	4.289e+07	4.949e+00	2.232e+01	9.643e-03	4.350e-02
0.5	2.621e+06	4.496e-01	1.803e+00	8.825e-04	3.539e-03
0.6	9.821e+08	2.323e+02	8.480e+02	4.534e-01	1.655e+00
0.8	3.744e+09	1.471e+03	4.673e+03	2.798e+00	8.889e+00
1.0	9.272e+08	5.409e+02	1.552e+03	9.970e-01	2.861e+00
1.5	9.111e+08	1.090e+03	2.651e+03	1.834e+00	4.460e+00
2.0	2.985e+07	5.879e+01	1.298e+02	9.091e-02	2.008e-01
3.0	2.424e+06	9.382e+00	1.837e+01	1.273e-02	2.492e-02
TOTALS:	7.120e+09	3.415e+03	9.941e+03	6.210e+00	1.822e+01

Results - Dose Point # 2 - (84.25,24.42) in

Energy MeV	Activity photons/sec	Fluence Rate MeV/cm²/sec No Buildup	Fluence Rate MeV/cm²/sec With Buildup	Exposure Rate mR/hr No Buildup	Exposure Rate mR/hr With Buildup
0.015	1.943e+06	1.644e-129	9.191e-28	1.410e-130	7.884e-29
0.02	3.713e+05	2.348e-61	3.083e-28	8.134e-63	1.068e-29
0.03	6.233e+07	1.937e-20	5.670e-20	1.920e-22	5.619e-22
0.04	1.440e+07	1.159e-10	6.386e-10	5.127e-13	2.824e-12
0.05	2.032e+06	1.772e-07	1.540e-06	4.722e-10	4.101e-09
0.06	3.608e+07	2.591e-04	2.808e-03	5.147e-07	5.578e-06
0.08	3.017e+07	1.020e-02	1.119e-01	1.615e-05	1.770e-04
0.1	1.972e+08	3.231e-01	3.044e+00	4.944e-04	4.657e-03
0.15	2.746e+06	2.071e-02	1.391e-01	3.410e-05	2.291e-04
0.2	5.781e+07	8.420e-01	4.637e+00	1.486e-03	8.184e-03
0.3	7.273e+07	2.223e+00	9.685e+00	4.217e-03	1.837e-02
0.4	4.289e+07	2.124e+00	7.969e+00	4.138e-03	1.553e-02
0.5	2.621e+06	1.872e-01	6.289e-01	3.674e-04	1.235e-03
0.6	9.821e+08	9.439e+01	2.906e+02	1.842e-01	5.672e-01
0.8	3.744e+09	5.749e+02	1.558e+03	1.094e+00	2.964e+00
1.0	9.272e+08	2.049e+02	5.064e+02	3.778e-01	9.334e-01
1.5	9.111e+08	3.900e+02	8.305e+02	6.562e-01	1.397e+00
2.0	2.985e+07	2.024e+01	3.957e+01	3.129e-02	6.119e-02
3.0	2.424e+06	3.076e+00	5.412e+00	4.173e-03	7.343e-03
TOTALS:	7.120e+09	1.293e+03	3.257e+03	2.358e+00	5.979e+00

MicroShield v5.01 (5.01-00093)

Page : 1
DOS File: TPSWC310.MS5
Run Date: March 13, 2002
Run Time: 9:41:37 AM
Duration: 00:02:30

File Ref: _____
Date: 3/13/02
By: [redacted]
Checked: _____

Case Title: TPIISWC3'10'
Description: TRUPACT II Waste-Soil Composite Loading @ Contact, 3', 10'
Geometry: 12 - Annular Cylinder - External Dose Point

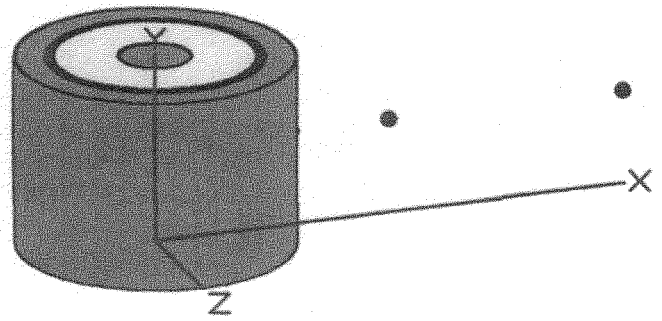

Source Dimensions

Height	167.64 cm	5 ft 6.0 in
Radius	30.48 cm	1 ft

Dose Points

	X	Y	Z
# 1	124.46 cm	83.82 cm	0 cm
	4 ft 1.0 in	2 ft 9.0 in	0.0 in
# 2	213.36 cm	83.82 cm	0 cm
	7 ft 0.0 in	2 ft 9.0 in	0.0 in
# 3	426.72 cm	83.82 cm	0 cm
	14 ft 0.0 in	2 ft 9.0 in	0.0 in

Shields

Shield Name	Dimension	Material	Density
Cyl. Core	1.86 in³	Foam	1
Shield 1	.5 in	Iron	7.86
Source	22.0 in	TRUw-s	2
Shield 3	.5 in	Iron	7.86
Shield 4	1.0 in	Air	0.00122
Shield 5	.25 in	Iron	7.86
Shield 6	1.0 in	Air	0.00122
Shield 7	.25 in	Iron	7.86
Shield 8	10.0 in	Foam	1
Shield 9	.5 in	Iron	7.86
Transition		Air	0.00122
Air Gap		Air	0.00122

Source Input
Grouping Method : Standard Indices
Number of Groups : 25
Lower Energy Cutoff : 0.015
Photons < 0.015 : Excluded
Library : Grove

Nuclide	curies	becquerels	µCi/cm³	Bq/cm³
Ac-225	8.6076e-009	3.1848e+002	2.4500e-009	9.0650e-005
Ac-227	1.9534e-009	7.2276e+001	5.5600e-010	2.0572e-005
Ac-228	8.3265e-006	3.0808e+005	2.3700e-006	8.7690e-002
Am-241	3.8295e+000	1.4169e+011	1.0900e+000	4.0330e+004
Am-243	2.7439e-003	1.0152e+008	7.8100e-004	2.8897e+001
At-217	8.6076e-009	3.1848e+002	2.4500e-009	9.0650e-005
Ba-137m	1.1348e-002	4.1987e+008	3.2300e-003	1.1951e+002
Bi-210	1.0821e-004	4.0038e+006	3.0800e-005	1.1396e+000
Bi-211	1.8691e-009	6.9156e+001	5.3200e-010	1.9684e-005
Bi-212	7.4131e-005	2.7428e+006	2.1100e-005	7.8070e-001
Bi-213	8.6076e-009	3.1848e+002	2.4500e-009	9.0650e-005
Bi-214	1.2261e-003	4.5367e+007	3.4900e-004	1.2913e+001
C-14	1.0224e-002	3.7828e+008	2.9100e-003	1.0767e+002

DOS File: TPSWC310.MS5
Run Date: March 13, 2002
Run Time: 9:41:37 AM
Duration: 00:02:30

Nuclide	curies	becquerels	µCi/cm³	Bq/cm³
Cl-36	2.2731e-005	8.4105e+005	6.4700e-006	2.3939e-001
Cm-244	9.5562e-001	3.5358e+010	2.7200e-001	1.0064e+004
Co-60	9.8021e-003	3.6268e+008	2.7900e-003	1.0323e+002
Cs-137	1.1980e-002	4.4327e+008	3.4100e-003	1.2617e+002
Fr-221	8.6076e-009	3.1848e+002	2.4500e-009	9.0650e-005
Fr-223	2.6947e-011	9.9704e-001	7.6700e-012	2.8379e-007
I-129	3.2358e-006	1.1972e+005	9.2100e-007	3.4077e-002
Nb-94	2.0483e-002	7.5785e+008	5.8300e-003	2.1571e+002
Ni-59	3.0741e-002	1.1374e+009	8.7500e-003	3.2375e+002
Np-237	5.7618e-005	2.1319e+006	1.6400e-005	6.0680e-001
Np-239	2.7439e-003	1.0152e+008	7.8100e-004	2.8897e+001
Pa-231	2.4874e-008	9.2034e+002	7.0800e-009	2.6196e-004
Pa-233	5.7618e-005	2.1319e+006	1.6400e-005	6.0680e-001
Pa-234	3.8295e-006	1.4169e+005	1.0900e-006	4.0330e-002
Pa-234m	2.3961e-003	8.8655e+007	6.8200e-004	2.5234e+001
Pb-209	8.6076e-009	3.1848e+002	2.4500e-009	9.0650e-005
Pb-210	1.0891e-004	4.0298e+006	3.1000e-005	1.1470e+000
Pb-211	1.8691e-009	6.9156e+001	5.3200e-010	1.9684e-005
Pb-212	7.4131e-005	2.7428e+006	2.1100e-005	7.8070e-001
Pb-214	1.2261e-003	4.5367e+007	3.4900e-004	1.2913e+001
Po-210	8.8887e-005	3.2888e+006	2.5300e-005	9.3610e-001
Po-211	5.0943e-012	1.8849e-001	1.4500e-012	5.3650e-008
Po-212	4.7430e-005	1.7549e+006	1.3500e-005	4.9950e-001
Po-213	8.4319e-009	3.1198e+002	2.4000e-009	8.8800e-005
Po-214	1.2261e-003	4.5367e+007	3.4900e-004	1.2913e+001
Po-215	1.8691e-009	6.9156e+001	5.3200e-010	1.9684e-005
Po-216	7.4131e-005	2.7428e+006	2.1100e-005	7.8070e-001
Po-218	1.2261e-003	4.5367e+007	3.4900e-004	1.2913e+001
Pu-238	3.4220e-001	1.2661e+010	9.7400e-002	3.6038e+003
Pu-239	1.3280e+000	4.9137e+010	3.7800e-001	1.3986e+004
Pu-240	3.5063e-001	1.2973e+010	9.9800e-002	3.6926e+003
Pu-241	1.7285e+001	6.3956e+011	4.9200e+000	1.8204e+005
Pu-242	3.3798e-004	1.2505e+007	9.6200e-005	3.5594e+000
Ra-223	1.8691e-009	6.9156e+001	5.3200e-010	1.9684e-005
Ra-224	7.4131e-005	2.7428e+006	2.1100e-005	7.8070e-001
Ra-225	8.7481e-009	3.2368e+002	2.4900e-009	9.2130e-005
Ra-226	1.2261e-003	4.5367e+007	3.4900e-004	1.2913e+001
Ra-228	8.3265e-006	3.0808e+005	2.3700e-006	8.7690e-002
Rn-219	1.8691e-009	6.9156e+001	5.3200e-010	1.9684e-005
Rn-220	7.4131e-005	2.7428e+006	2.1100e-005	7.8070e-001
Rn-222	1.2261e-003	4.5367e+007	3.4900e-004	1.2913e+001
Sr-90	8.6076e+000	3.1848e+011	2.4500e+000	9.0650e+004
Tc-99	1.2402e-003	4.5887e+007	3.5300e-004	1.3061e+001
Th-227	1.8726e-009	6.9286e+001	5.3300e-010	1.9721e-005
Th-228	7.3779e-005	2.7298e+006	2.1000e-005	7.7700e-001
Th-229	8.8887e-009	3.2888e+002	2.5300e-009	9.3610e-005
Th-230	6.7807e-007	2.5088e+004	1.9300e-007	7.1410e-003
Th-231	1.1348e-004	4.1987e+006	3.2300e-005	1.1951e+000
Th-232	2.7439e-005	1.0152e+006	7.8100e-006	2.8897e-001
Th-234	2.3961e-003	8.8655e+007	6.8200e-004	2.5234e+001
Tl-207	1.8621e-009	6.8896e+001	5.3000e-010	1.9610e-005
Tl-208	2.6701e-005	9.8794e+005	7.6000e-006	2.8120e-001
Tl-209	1.8621e-010	6.8896e+000	5.3000e-011	1.9610e-006
U-233	3.0917e-005	1.1439e+006	8.8000e-006	3.2560e-001

DOS File: TPSWC310.MS5
Run Date: March 13, 2002
Run Time: 9:41:37 AM
Duration: 00:02:30

Nuclide	curies	becquerels	µCi/cm³	Bq/cm³
U-234	1.3842e-003	5.1217e+007	3.9400e-004	1.4578e+001
U-235	1.1348e-004	4.1987e+006	3.2300e-005	1.1951e+000
U-236	5.8672e-005	2.1709e+006	1.6700e-005	6.1790e-001
U-238	2.3961e-003	8.8655e+007	6.8200e-004	2.5234e+001
Y-90	8.6076e+000	3.1848e+011	2.4500e+000	9.0650e+004

Buildup
The material reference is : Source

Integration Parameters

Radial	30
Circumferential	30
Y Direction (axial)	30

Results - Dose Point # 1 - (49,33,0) in

Energy MeV	Activity photons/sec	Fluence Rate MeV/cm²/sec No Buildup	Fluence Rate MeV/cm²/sec With Buildup	Exposure Rate mR/hr No Buildup	Exposure Rate mR/hr With Buildup
0.015	7.893e+05	0.000e+00	6.664e-28	0.000e+00	5.716e-29
0.02	1.508e+05	0.000e+00	2.235e-28	0.000e+00	7.743e-30
0.03	3.577e+09	3.534e-118	1.484e-23	3.503e-120	1.471e-25
0.04	1.150e+07	1.186e-55	1.810e-25	5.246e-58	8.007e-28
0.05	7.803e+06	6.620e-32	6.655e-25	1.764e-34	1.773e-27
0.06	5.114e+10	2.692e-17	1.905e-15	5.347e-20	3.784e-18
0.08	7.990e+07	3.249e-11	3.471e-09	5.142e-14	5.493e-12
0.1	1.042e+08	9.784e-08	1.094e-05	1.497e-10	1.673e-08
0.15	1.281e+06	8.626e-07	6.949e-05	1.420e-09	1.144e-07
0.2	2.351e+07	1.553e-04	9.236e-03	2.741e-07	1.630e-05
0.3	2.956e+07	1.641e-03	6.127e-02	3.113e-06	1.162e-04
0.4	1.745e+07	3.293e-03	8.682e-02	6.415e-06	1.692e-04
0.5	1.066e+06	4.834e-04	9.661e-03	9.489e-07	1.896e-05
0.6	4.006e+08	3.609e-01	5.795e+00	7.044e-04	1.131e-02
0.8	1.521e+09	3.911e+00	4.483e+01	7.439e-03	8.528e-02
1.0	3.780e+08	2.140e+00	1.914e+01	3.944e-03	3.528e-02
1.5	3.715e+08	8.233e+00	4.895e+01	1.385e-02	8.236e-02
2.0	1.215e+07	6.498e-01	3.041e+00	1.005e-03	4.703e-03
3.0	9.860e+05	1.592e-01	5.592e-01	2.159e-04	7.587e-04
TOTALS:	5.768e+10	1.546e+01	1.225e+02	2.717e-02	2.200e-01

Results - Dose Point # 2 - (84,33,0) in

Energy MeV	Activity photons/sec	Fluence Rate MeV/cm²/sec No Buildup	Fluence Rate MeV/cm²/sec With Buildup	Exposure Rate mR/hr No Buildup	Exposure Rate mR/hr With Buildup
0.015	7.893e+05	0.000e+00	2.134e-28	0.000e+00	1.830e-29
0.02	1.508e+05	0.000e+00	7.158e-29	0.000e+00	2.480e-30
0.03	3.577e+09	2.061e-118	4.752e-24	2.043e-120	4.710e-26
0.04	1.150e+07	6.768e-56	5.798e-26	2.993e-58	2.564e-28
0.05	7.803e+06	3.753e-32	2.131e-25	9.997e-35	5.677e-28
0.06	5.114e+10	1.533e-17	1.085e-15	3.045e-20	2.156e-18
0.08	7.990e+07	1.841e-11	1.967e-09	2.914e-14	3.113e-12
0.1	1.042e+08	5.482e-08	6.104e-06	8.388e-11	9.339e-09

DOS File: TPSWC310.MS5
Run Date: March 13, 2002
Run Time: 9:41:37 AM
Duration: 00:02:30

Energy MeV	Activity photons/sec	Fluence Rate MeV/cm²/sec No Buildup	Fluence Rate MeV/cm²/sec With Buildup	Exposure Rate mR/hr No Buildup	Exposure Rate mR/hr With Buildup
0.15	1.281e+06	4.674e-07	3.697e-05	7.696e-10	6.087e-08
0.2	2.351e+07	8.221e-05	4.751e-03	1.451e-07	8.385e-06
0.3	2.956e+07	8.441e-04	3.030e-02	1.601e-06	5.747e-05
0.4	1.745e+07	1.660e-03	4.185e-02	3.234e-06	8.155e-05
0.5	1.066e+06	2.396e-04	4.566e-03	4.703e-07	8.963e-06
0.6	4.006e+08	1.763e-01	2.693e+00	3.441e-04	5.257e-03
0.8	1.521e+09	1.863e+00	2.028e+01	3.543e-03	3.857e-02
1.0	3.780e+08	9.972e-01	8.461e+00	1.838e-03	1.560e-02
1.5	3.715e+08	3.676e+00	2.073e+01	6.184e-03	3.488e-02
2.0	1.215e+07	2.813e-01	1.251e+00	4.351e-04	1.934e-03
3.0	9.860e+05	6.620e-02	2.216e-01	8.981e-05	3.007e-04
TOTALS:	5.768e+10	7.062e+00	5.371e+01	1.244e-02	9.669e-02

Results - Dose Point # 3 - (168,33,0) in

Energy MeV	Activity photons/sec	Fluence Rate MeV/cm²/sec No Buildup	Fluence Rate MeV/cm²/sec With Buildup	Exposure Rate mR/hr No Buildup	Exposure Rate mR/hr With Buildup
0.015	7.893e+05	0.000e+00	5.184e-29	0.000e+00	4.447e-30
0.02	1.508e+05	0.000e+00	1.739e-29	0.000e+00	6.024e-31
0.03	3.577e+09	9.402e-119	1.155e-24	9.318e-121	1.144e-26
0.04	1.150e+07	3.164e-56	1.409e-26	1.399e-58	6.229e-29
0.05	7.803e+06	1.700e-32	5.178e-26	4.528e-35	1.379e-28
0.06	5.114e+10	6.508e-18	4.591e-16	1.293e-20	9.119e-19
0.08	7.990e+07	6.762e-12	7.108e-10	1.070e-14	1.125e-12
0.1	1.042e+08	1.811e-08	1.962e-06	2.771e-11	3.002e-09
0.15	1.281e+06	1.366e-07	1.039e-05	2.250e-10	1.711e-08
0.2	2.351e+07	2.296e-05	1.272e-03	4.052e-08	2.245e-06
0.3	2.956e+07	2.265e-04	7.804e-03	4.296e-07	1.480e-05
0.4	1.745e+07	4.358e-04	1.058e-02	8.492e-07	2.061e-05
0.5	1.066e+06	6.201e-05	1.140e-03	1.217e-07	2.238e-06
0.6	4.006e+08	4.511e-02	6.666e-01	8.805e-05	1.301e-03
0.8	1.521e+09	4.688e-01	4.954e+00	8.916e-04	9.424e-03
1.0	3.780e+08	2.479e-01	2.049e+00	4.570e-04	3.778e-03
1.5	3.715e+08	8.963e-01	4.952e+00	1.508e-03	8.332e-03
2.0	1.215e+07	6.787e-02	2.966e-01	1.049e-04	4.587e-04
3.0	9.860e+05	1.579e-02	5.222e-02	2.143e-05	7.085e-05
TOTALS:	5.768e+10	1.743e+00	1.299e+01	3.073e-03	2.340e-02

MicroShield v5.01 (5.01-00093)

Page : 1
DOS File: TPMC310.MS5
Run Date: March 13, 2002
Run Time: 9:32:12 AM
Duration: 00:02:40

File Ref: _____
Date: 3/13/02
By: [illegible]
Checked: _____

Case Title: TPIIMetal@ C,3',10'
Description: TRUPACT II Metal Loading @ Contact, 3', 10'
Geometry: 12 - Annular Cylinder - External Dose Point

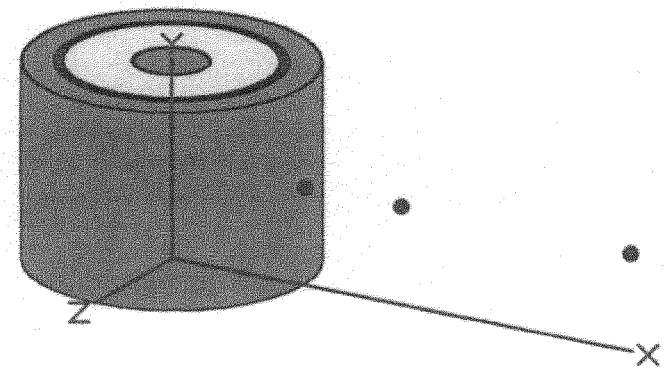

Source Dimensions

Height	167.64 cm	5 ft 6.0 in
Radius	30.48 cm	1 ft

Dose Points

	X	Y	Z
# 1	124.46 cm	83.82 cm	0 cm
	4 ft 1.0 in	2 ft 9.0 in	0.0 in
# 2	213.36 cm	83.82 cm	0 cm
	7 ft 0.0 in	2 ft 9.0 in	0.0 in
# 3	426.72 cm	83.82 cm	0 cm
	14 ft 0.0 in	2 ft 9.0 in	0.0 in

Shields

Shield Name	Dimension	Material	Density
Cyl. Core	1.86 in³	Foam	1
Shield 1	.5 in	Iron	7.86
Source	22.0 in	Iron	7.86
Shield 3	.5 in	Iron	7.86
Shield 4	1.0 in	Air	0.00122
Shield 5	.25 in	Iron	7.86
Shield 6	1.0 in	Air	0.00122
Shield 7	.25 in	Iron	7.86
Shield 8	10.0 in	Foam	1
Shield 9	.5 in	Iron	7.86
Transition		Air	0.00122
Air Gap		Air	0.00122

Source Input
Grouping Method : Standard Indices
Number of Groups : 25
Lower Energy Cutoff : 0.015
Photons < 0.015 : Excluded
Library : Grove

Nuclide	curies	becquerels	µCi/cm³	Bq/cm³
Ac-225	1.1629e-007	4.3027e+003	3.3100e-008	1.2247e-003
Ac-227	2.6350e-008	9.7494e+002	7.5000e-009	2.7750e-004
Ac-228	1.1243e-004	4.1597e+006	3.2000e-005	1.1840e+000
Am-241	5.1646e+001	1.9109e+012	1.4700e+001	5.4390e+005
Am-243	3.6890e-002	1.3649e+009	1.0500e-002	3.8850e+002
At-217	1.1629e-007	4.3027e+003	3.3100e-008	1.2247e-003
Ba-137m	1.5283e-001	5.6547e+009	4.3500e-002	1.6095e+003
Bi-210	1.4615e-003	5.4077e+007	4.1600e-004	1.5392e+001
Bi-211	2.5190e-008	9.3204e+002	7.1700e-009	2.6529e-004
Bi-212	1.0013e-003	3.7048e+007	2.8500e-004	1.0545e+001
Bi-213	1.1629e-007	4.3027e+003	3.3100e-008	1.2247e-003
Bi-214	1.6548e-002	6.1226e+008	4.7100e-003	1.7427e+002
C-14	1.3807e-001	5.1087e+009	3.9300e-002	1.4541e+003

Page : 2
DOS File: TPMC310.MS5
Run Date: March 13, 2002
Run Time: 9:32:12 AM
Duration: 00:02:40

Nuclide	curies	becquerels	µCi/cm³	Bq/cm³
Cl-36	3.0671e-004	1.1348e+007	8.7300e-005	3.2301e+000
Cm-244	1.2894e+001	4.7707e+011	3.6700e+000	1.3579e+005
Co-60	1.3210e-001	4.8877e+009	3.7600e-002	1.3912e+003
Cs-137	1.6161e-001	5.9796e+009	4.6000e-002	1.7020e+003
Fr-221	1.1629e-007	4.3027e+003	3.3100e-008	1.2247e-003
Fr-223	3.6187e-010	1.3389e+001	1.0300e-010	3.8110e-006
I-129	4.3565e-005	1.6119e+006	1.2400e-005	4.5880e-001
Nb-94	2.7615e-001	1.0217e+010	7.8600e-002	2.9082e+003
Ni-59	4.1457e-001	1.5339e+010	1.1800e-001	4.3660e+003
Np-237	7.7995e-004	2.8858e+007	2.2200e-004	8.2140e+000
Np-239	3.6890e-002	1.3649e+009	1.0500e-002	3.8850e+002
Pa-231	3.3552e-007	1.2414e+004	9.5500e-008	3.5335e-003
Pa-233	7.7644e-004	2.8728e+007	2.2100e-004	8.1770e+000
Pa-234	5.1646e-005	1.9109e+006	1.4700e-005	5.4390e-001
Pa-234m	3.2322e-002	1.1959e+009	9.2000e-003	3.4040e+002
Pb-209	1.1629e-007	4.3027e+003	3.3100e-008	1.2247e-003
Pb-210	1.4686e-003	5.4337e+007	4.1800e-004	1.5466e+001
Pb-211	2.5190e-008	9.3204e+002	7.1700e-009	2.6529e-004
Pb-212	1.0013e-003	3.7048e+007	2.8500e-004	1.0545e+001
Pb-214	1.6548e-002	6.1226e+008	4.7100e-003	1.7427e+002
Po-210	1.2015e-003	4.4457e+007	3.4200e-004	1.2654e+001
Po-211	6.8861e-011	2.5478e+000	1.9600e-011	7.2520e-007
Po-212	6.4293e-004	2.3789e+007	1.8300e-004	6.7710e+000
Po-213	1.1383e-007	4.2117e+003	3.2400e-008	1.1988e-003
Po-214	1.6548e-002	6.1226e+008	4.7100e-003	1.7427e+002
Po-215	2.5190e-008	9.3204e+002	7.1700e-009	2.6529e-004
Po-216	1.0013e-003	3.7048e+007	2.8500e-004	1.0545e+001
Po-218	1.6548e-002	6.1226e+008	4.7100e-003	1.7427e+002
Pu-238	4.6024e+000	1.7029e+011	1.3100e+000	4.8470e+004
Pu-239	1.7918e+001	6.6296e+011	5.1000e+000	1.8870e+005
Pu-240	4.7430e+000	1.7549e+011	1.3500e+000	4.9950e+004
Pu-241	2.3293e+002	8.6185e+012	6.6300e+001	2.4531e+006
Pu-242	4.5673e-003	1.6899e+008	1.3000e-003	4.8100e+001
Ra-223	2.5190e-008	9.3204e+002	7.1700e-009	2.6529e-004
Ra-224	1.0013e-003	3.7048e+007	2.8500e-004	1.0545e+001
Ra-225	1.1770e-007	4.3547e+003	3.3500e-008	1.2395e-003
Ra-226	1.6548e-002	6.1226e+008	4.7100e-003	1.7427e+002
Ra-228	1.1243e-004	4.1597e+006	3.2000e-005	1.1840e+000
Rn-219	2.5190e-008	9.3204e+002	7.1700e-009	2.6529e-004
Rn-220	1.0013e-003	3.7048e+007	2.8500e-004	1.0545e+001
Rn-222	1.6548e-002	6.1226e+008	4.7100e-003	1.7427e+002
Sr-90	1.1629e+002	4.3027e+012	3.3100e+001	1.2247e+006
Tc-99	1.6723e-002	6.1876e+008	4.7600e-003	1.7612e+002
Th-227	2.5261e-008	9.3464e+002	7.1900e-009	2.6603e-004
Th-228	9.9778e-004	3.6918e+007	2.8400e-004	1.0508e+001
Th-229	1.2015e-007	4.4457e+003	3.4200e-008	1.2654e-003
Th-230	9.1346e-006	3.3798e+005	2.6000e-006	9.6200e-002
Th-231	1.5318e-003	5.6677e+007	4.3600e-004	1.6132e+001
Th-232	3.6890e-004	1.3649e+007	1.0500e-004	3.8850e+000
Th-234	3.2322e-002	1.1959e+009	9.2000e-003	3.4040e+002
Tl-207	2.5120e-008	9.2944e+002	7.1500e-009	2.6455e-004
Tl-208	3.5836e-004	1.3259e+007	1.0200e-004	3.7740e+000
Tl-209	2.5085e-009	9.2814e+001	7.1400e-010	2.6418e-005
U-233	4.1808e-004	1.5469e+007	1.1900e-004	4.4030e+000

DOS File: TPMC310.MS5
Run Date: March 13, 2002
Run Time: 9:32:12 AM
Duration: 00:02:40

Nuclide	curies	becquerels	µCi/cm³	Bq/cm³
U-234	1.8656e-002	6.9026e+008	5.3100e-003	1.9647e+002
U-235	1.5318e-003	5.6677e+007	4.3600e-004	1.6132e+001
U-236	7.9049e-004	2.9248e+007	2.2500e-004	8.3250e+000
U-238	3.2322e-002	1.1959e+009	9.2000e-003	3.4040e+002
Y-90	1.1629e+002	4.3027e+012	3.3100e+001	1.2247e+006

Buildup
The material reference is : Source

Integration Parameters

Radial	30
Circumferential	30
Y Direction (axial)	30

Results - Dose Point # 1 - (49,33,0) in

Energy MeV	Activity photons/sec	Fluence Rate MeV/cm²/sec No Buildup	Fluence Rate MeV/cm²/sec With Buildup	Exposure Rate mR/hr No Buildup	Exposure Rate mR/hr With Buildup
0.015	1.064e+07	0.000e+00	8.015e-27	0.000e+00	6.875e-28
0.02	2.033e+06	0.000e+00	2.407e-27	0.000e+00	8.338e-29
0.03	4.823e+10	1.068e-119	7.841e-23	1.059e-121	7.771e-25
0.04	1.548e+08	3.701e-56	3.847e-25	1.637e-58	1.702e-27
0.05	1.055e+08	4.130e-32	3.750e-25	1.100e-34	9.991e-28
0.06	6.897e+11	2.229e-17	3.726e-17	4.428e-20	7.401e-20
0.08	1.075e+09	4.039e-11	9.308e-11	6.392e-14	1.473e-13
0.1	1.402e+09	1.665e-07	5.173e-07	2.548e-10	7.914e-10
0.15	1.726e+07	2.259e-06	1.229e-05	3.719e-09	2.024e-08
0.2	3.165e+08	4.804e-04	3.922e-03	8.479e-07	6.923e-06
0.3	3.980e+08	5.665e-03	6.077e-02	1.075e-05	1.153e-04
0.4	2.355e+08	1.176e-02	1.315e-01	2.292e-05	2.562e-04
0.5	1.438e+07	1.748e-03	1.848e-02	3.430e-06	3.628e-05
0.6	5.396e+09	1.312e+00	1.274e+01	2.560e-03	2.486e-02
0.8	2.050e+10	1.431e+01	1.162e+02	2.722e-02	2.211e-01
1.0	5.095e+09	7.849e+00	5.423e+01	1.447e-02	9.995e-02
1.5	5.006e+09	3.019e+01	1.547e+02	5.079e-02	2.603e-01
2.0	1.640e+08	2.359e+00	1.007e+01	3.648e-03	1.558e-02
3.0	1.323e+07	5.545e-01	1.867e+00	7.523e-04	2.532e-03
TOTALS:	7.779e+11	5.659e+01	3.501e+02	9.948e-02	6.247e-01

Results - Dose Point # 2 - (84,33,0) in

Energy MeV	Activity photons/sec	Fluence Rate MeV/cm²/sec No Buildup	Fluence Rate MeV/cm²/sec With Buildup	Exposure Rate mR/hr No Buildup	Exposure Rate mR/hr With Buildup
0.015	1.064e+07	0.000e+00	2.567e-27	0.000e+00	2.202e-28
0.02	2.033e+06	0.000e+00	7.708e-28	0.000e+00	2.670e-29
0.03	4.823e+10	6.202e-120	2.511e-23	6.147e-122	2.489e-25
0.04	1.548e+08	2.120e-56	1.232e-25	9.375e-59	5.449e-28
0.05	1.055e+08	2.338e-32	1.201e-25	6.229e-35	3.199e-28
0.06	6.897e+11	1.269e-17	2.121e-17	2.520e-20	4.212e-20
0.08	1.075e+09	2.290e-11	5.277e-11	3.624e-14	8.351e-14
0.1	1.402e+09	9.342e-08	2.900e-07	1.429e-10	4.437e-10

DOS File: TPMC310.MS5
Run Date: March 13, 2002
Run Time: 9:32:12 AM
Duration: 00:02:40

Energy MeV	Activity photons/sec	Fluence Rate MeV/cm²/sec No Buildup	Fluence Rate MeV/cm²/sec With Buildup	Exposure Rate mR/hr No Buildup	Exposure Rate mR/hr With Buildup
0.15	1.726e+07	1.228e-06	6.652e-06	2.022e-09	1.095e-08
0.2	3.165e+08	2.556e-04	2.064e-03	4.511e-07	3.643e-06
0.3	3.980e+08	2.935e-03	3.081e-02	5.567e-06	5.844e-05
0.4	2.355e+08	5.980e-03	6.493e-02	1.165e-05	1.265e-04
0.5	1.438e+07	8.749e-04	8.946e-03	1.717e-06	1.756e-05
0.6	5.396e+09	6.480e-01	6.064e+00	1.265e-03	1.184e-02
0.8	2.050e+10	6.911e+00	5.387e+01	1.315e-02	1.025e-01
1.0	5.095e+09	3.717e+00	2.461e+01	6.852e-03	4.535e-02
1.5	5.006e+09	1.376e+01	6.744e+01	2.315e-02	1.135e-01
2.0	1.640e+08	1.046e+00	4.273e+00	1.618e-03	6.608e-03
3.0	1.323e+07	2.375e-01	7.656e-01	3.223e-04	1.039e-03
TOTALS:	7.779e+11	2.633e+01	1.571e+02	4.637e-02	2.810e-01

Results - Dose Point # 3 - (168,33,0) in

Energy MeV	Activity photons/sec	Fluence Rate MeV/cm²/sec No Buildup	Fluence Rate MeV/cm²/sec With Buildup	Exposure Rate mR/hr No Buildup	Exposure Rate mR/hr With Buildup
0.015	1.064e+07	0.000e+00	6.236e-28	0.000e+00	5.349e-29
0.02	2.033e+06	0.000e+00	1.873e-28	0.000e+00	6.487e-30
0.03	4.823e+10	2.832e-120	6.101e-24	2.807e-122	6.046e-26
0.04	1.548e+08	9.915e-57	2.993e-26	4.385e-59	1.324e-28
0.05	1.055e+08	1.060e-32	2.918e-26	2.825e-35	7.773e-29
0.06	6.897e+11	5.398e-18	9.020e-18	1.072e-20	1.792e-20
0.08	1.075e+09	8.439e-12	1.940e-11	1.335e-14	3.070e-14
0.1	1.402e+09	3.098e-08	9.572e-08	4.740e-11	1.464e-10
0.15	1.726e+07	3.601e-07	1.925e-06	5.929e-10	3.171e-09
0.2	3.165e+08	7.152e-05	5.661e-04	1.262e-07	9.992e-07
0.3	3.980e+08	7.882e-04	8.056e-03	1.495e-06	1.528e-05
0.4	2.355e+08	1.571e-03	1.656e-02	3.061e-06	3.227e-05
0.5	1.438e+07	2.264e-04	2.246e-03	4.444e-07	4.408e-06
0.6	5.396e+09	1.657e-01	1.505e+00	3.234e-04	2.937e-03
0.8	2.050e+10	1.736e+00	1.316e+01	3.302e-03	2.502e-02
1.0	5.095e+09	9.217e-01	5.942e+00	1.699e-03	1.095e-02
1.5	5.006e+09	3.338e+00	1.600e+01	5.616e-03	2.692e-02
2.0	1.640e+08	2.507e-01	1.004e+00	3.876e-04	1.552e-03
3.0	1.323e+07	5.611e-02	1.780e-01	7.613e-05	2.415e-04
TOTALS:	7.779e+11	6.471e+00	3.781e+01	1.141e-02	6.768e-02

Appendix C

Injury and Fatality Risk Factors from Construction and Transportation Activities (Year 2000)

Table C-1. Mechanical injury and fatality risk factors.

Industry/Activity	Average Annual Employment	Hours Worked/Year	Total Injuries	Total Fatalities	Injury Risk Factor (Injuries/ Person-Hour)	Fatality Risk Factor (Fatalities/ Person-Hour)
Construction	6,338,000	2080	493,000	1,154	3.74E - 05	8.75E - 08
Transportation and public utilities	6,578,000	2080	447,000	957	3.27E - 05	6.99E - 08
Total					**7.01E - 05**	**1.57E - 07**

Appendix D

Exposure Duration Calculational Sheets and Assumptions for Each Alternative

	Estimated Worker-Hours Worked (Field)	Basis of Hourly Estimates
Preconstruction	**181,170**	
In situ volatile organic compound extraction	27,720	Estimate initial installation requires a crew of 12 for 4 months; equipment operation requires a crew of six for 2 years = 12*165*2 + 6*165*24 = 27,720.
Predesign characterization	14,850	Estimate field sampling crew of 15 for a duration of 6 months = 15*165*6 = 14,850.
Treatability studies and hot testing	59,400	Estimate would require a crew of 30 for a duration of 12 months for the necessary treatability studies and hot testing that would be required = 30*165*12 = 59,400.
Readiness Assessment	49,500	Estimate readiness assessment team of 25 for a duration of 12 months in the field = 25*165*12 = 49,500.
Mobilization and setup of equipment, supplies, and personnel to site	29,700	Estimate crew of 30 for 6 months to mobilize necessary ISV equipment = 30*165*6 = 29,700.
Construction	**165,000**	
		Basis for building construction hourly assumptions: assume typical INEEL construction building construction costs are \$400/ft^2. Assume 30% of the cost is for materials; therefore, labor cost is \$280/ft^2. The assumed composite burdened labor rate for all crafts, equipment operators, and construction oversight is \$40/hour. Therefore, the number of hours/ft^2 is \$280/\$40 = 7 hours/ft^2. This factor will be applied to the following building constructions with scaling factors for unique building construction.
Construct and set up administrative building(s)	35,000	Assume administrative building(s) require 5,000 ft^2 and the building complexity factor is 1 (see above assumption basis). Therefore, total hours for construction is 5,000*7*1 = 35,000.
Construct equipment maintenance and storage building(s)	70,000	Assume equipment maintenance and storage building(s) require 10,000 ft^2 and the building complexity factor is 1 (see above assumption basis). Therefore, total hours for construction is 10,000*7*1 = 70,000.
Construct decontamination area	10,500	Assume that the decontamination area is 3,000 ft^2 and the building complexity factor is 0.5 (see above assumption basis). Therefore, total hours for construction is 3,000*7*0.5 = 10,500.

	Estimated Worker-Hours Worked (Field)	Basis of Hourly Estimates
Access roads	9,900	Assume it requires 6 months for construction of necessary access roads using a crew of 10. Roads will require no maintenance over the life of ISV. Hours = 6*165*10 = 9,900.
Utilities (electricity, water, and sewer)	39,600	Assume it requires a total of 6 months construction for initial installation using a total crew for all utilities of 40. Assume no necessary electricity rerouting over the life of ISV. Hours = 6*165*40 = 39,600.
Zone 1—ISV operations	**3,162,000**	
Active ISV operations and maintenance	3,162,000	Before performing active ISV operations, in situ thermal desorption will be performed as waste preconditioning phase. Separate calculations indicate that the ISV alternative will require a duration of 15 years and will require a crew size of 124 working full time. This estimate includes the time necessary for personnel to place 10 ft of clean fill over the area to be vitrified, to set up and move the ISV hood and off-gas treatment system, and to perform all necessary maintenance throughout the life of the ISV alternative. Hours = 15*124*1,700 = 3,162,000.
Zone 2—Operations support	**127,500**	
Active ISV operations and maintenance	127,500	Separate calculations indicate that approximately five support personnel are required for the 15-year duration of the ISV alternative to perform miscellaneous tasks such as deliver ballast to the ISV location. These personnel are subject to lower risk because the exposure to the project site is more limited than those personnel involved in Zone 1 operations. Hours = 15*5*1,700 = 127,500.
Zone 2—Operations (grouting and capping)	**312,000**	
Active ISG operations for SVRs	5,000	Required surface area of SVRs that require ISG for stabilization is 19,886 ft^2. One grout hole occupies 4 ft^2; therefore, total holes are 4,972. Assume a total of 100 holes/day can be grouted; therefore, grouting of SVRs for stabilization requires 50 working days. Assume each grouting rig requires a crew of 10, and workdays are 10 hours each. Therefore, total hours = 50*10*10 = 5,000.

	Estimated Worker-Hours Worked (Field)	Basis of Hourly Estimates
Active ISG for immobilization of C-14	4,000	Assume that the surface area that requires grouting to immobilizeC-14 is 2.5 times the surface area of trench 57 = 2.5*6,346 ft^2 = 15,865 ft^2. One grout hole occupies 4 ft^2; therefore, total holes are 15,865/4 = 3,966. Assume a total of 100 holes/day can be grouted; therefore, grouting for immobilization of C-14 requires 40 working days. Assume each grouting rig requires a crew of 10, and workdays are 10 hours each. Therefore, total hours = 40*10*10 = 4,000.
Active ISG for foundation stabilization	3,500	This activity requires grouting of 25% of the remaining surface area of the SDA to stabilize the foundation to support construction of an engineered cover. The remaining area of the SDA is 841,528 (total surface area) - 750,529 (area of TRU pits, trenches, and Pad A) - 19,886 (area of SVRs) - 15,865 (area for C-14 immobilization) = 55,248 ft^2. This area needs to be grouted approximately 25%; therefore, total grout area is 55,248*0.25 = 13,812. One grout hole occupies 4 ft^2; therefore, total holes are 13,812/4 = 3,453. Assume a total of 100 holes/day can be grouted, which requires 35 working days to complete. Assume each grouting rig requires a crew of 10, and workdays are 10 hours each. Therefore, total hours = 35*10*10 = 3,500.
Maintenance of equipment for active ISG operations	2,500	Assume it requires a total of 20% of the number of hours required for active ISG operations (for all purposes).
Construct cap	297,000	Assume it requires crew of 50 a total of 36 months (constructed in segments) = 50*165*36 = 297,000.
D&D	**19,600**	
D&D administrative building(s)	3,500	Assume D&D requires 10% of the hours required for construction.
D&D equipment maintenance building(s)	14,000	Assume D&D requires 20% of the hours required for construction.
D&D decontamination area	2,100	Assume D&D requires 20% of the hours required for construction.

D&D = decontamination and decommissioning
ISV = in situ vitrification
SVR = soil vault row
TRU = transuranic