THE CONTENTS OF THIS SECTION ARE
THE HIGHEST QUALITY AVAILABLE

INITIAL gj DATE 9/27/02

PAGE NUMBERING SEQUENCE IS INCONSISTENT

Appendix D

Process Instrument and Control System (PICS) Installation

Appendix D

Process Instrument and Control System (PICS) Installation

D.1. OBJECTIVE

The objective of this document is to identify the Process Instrument and Control System (PICS) Installation for the INEEL CERCLA Disposal Facility. The INEEL CERCLA Disposal Facility consists of two Crest Pad Buildings, Truck Loading Station, Combined Process Sump, Landfill and Landfill Sump, and Evaporation Ponds. The electrical installation enables the facility to automatically collect and transport landfill leachate and decontamination wash down liquids from landfill, truck loading station, and crest pad buildings, to two evaporation ponds.

The PICS installation for the INEEL CERCLA Disposal Facility integrates the following hardware and software architectures and components:

1. Instrumentation
2. Control Panels
3. Programmable Logic Controller (PLC)
4. Operator Interface Unit (OIU)
5. Ethernet Local Area Network (LAN)
6. Uninterruptible Power Supply
7. PICS Application Software.

The PICS for the INEEL CERCLA Disposal Facility incorporate hardware and software configured and programmed enabling operators to monitor and interface with the following minimum process control systems both locally and remotely:

1. Landfill Leachate Collection and Recovery System
2. Landfill Leak Detection and Recovery System
3. Landfill Secondary Leak Detection and Recovery System
4. Landfill Crest Pad Building Monitoring
5. Evaporation Ponds Leak Detection and Recovery System
6. Evaporation Ponds Combined Process Sump
7. Evaporation Ponds Crest Pad Building Monitoring
8. SSSTF Process Flows to Evaporation Ponds.

The PICS for the INEEL CERCLA Disposal Facility is configured so that remote access to site status, process data, and reports collected and generated at the INEEL CERCLA Disposal Facility is made available to appropriate personnel through the use of Voice Pager and Ethernet Local Area Network (LAN).

(NOTE: This document does not identify hardware and software provided and configured by INEEL and through which INEEL remotely monitors and controls CERCLA Landfill processes over Ethernet Local Area Network [LAN]).

D.2. DRAWINGS, SPECIFICATIONS, AND SCHEDULES

INEEL CERCLA Disposal Facility PICS Installation drawings, specifications, and schedules to be referenced are as follows:

1. PICS Landfill P&ID Drawing IN-201
2. PICS Evaporation Ponds P&ID Drawing IN-202
3. PICS Control Block Diagram Drawing IN-203
4. PICS Control Panel Elevation and Layout Drawing IN-204
5. PICS Control Diagrams Drawing IN-205
6. PICS Specifications 13401 Process Instrumentation and Control Systems
7. PICS Instrument Listing Supplement to 13401 Process Instrumentation and Control Systems
8. PICS PLC Input/Output Listing Supplement to 13401 Process Instrumentation and Control Systems.

D.3. TERMS, DEFINITIONS, AND ABBREVIATIONS

The following list of terms, definitions, and abbreviations may be used throughout this document:

1. **Operator Interface Unit (OIU)**—Display unit that allows operators to visually monitor process system data and interface with the Facility's Programmable Logic Controllers.

2. **Programmable Logic Controller (PLC)**—Microprocessor-based device using programmable ladder logic for process monitoring and control that emulates functions of conventional panel-mounted equipment such as relays, timers counters, current switches, calculation modules, Proportional, Integral, and Derivative (PID) controllers, stepping switches, and drum programmers.

3. **Small Logic Controller (SLC)**—Same as PLC except compact in size and with less runtime memory.

4. **Input/Output Module (I/O)**—Modules installed in a common PLC chassis through which the PLC interfaces with analog or discrete control equipment. Types of I/O modules include analog (4-20 mA) input, analog (4-20 mA) output, 120VAC/ 24VDC discrete input, 120VAC/ 24VDC discrete output, and resistance thermometer detectors (RTD) and thermocouples. Input/output modules can also be installed remote from the PLC. In this instance, the PLC communicates with remote I/O modules via a remote I/O or PLC local area network (LAN).

5. **Application Software**—Software programmed to provide functions unique to the project and is not provided by system software alone. These include, but are not limited to, programmable controller ladder logic, databases, reports, control strategies, graphical display screens, and operation scripts.

6. **Process Monitoring and Control Software (PMCS)**—Software packages independent of specific process control projects on which they are used. Includes but not limited to, providing capability for data acquisition, monitoring, alarming, reporting, operator interface, trending, and report generation.

D.4. PICS ARCHITECTURES

D.4.1 PICS Instrumentation Architecture

PICS Instrumentation architecture consists of single variable pressure, flow, and temperature devices strategically placed throughout the facility so as to provide continuous process signals and data to PICS PLC, OIU, and Ethernet LAN architectures.

PICS instrumentation are be wired directly into SLC input modules (i.e., Allen-Bradley 1746 I/O modules). Process signals from each instrument are monitored for the purpose of controlling, displaying, recording, and alarming all process data.

D.4.1.1 Instrumentation

1. Instrument and control design limits the use of field instruments requiring local set-point adjustment. All set-point adjustments are programmed into the PLC via the OIU architecture.

2. Field Instruments incorporate the following signal types:

   a. Analog Signals, Current Type: 4-20 mA dc signals conforming to ISA S50.1.1

   b. PICS components, use the ISA 50.1 options:

      (1) Transmitter Type: 2-wire and 4-wire

      (2) Transmitter Load Resistance Capacity: Class L

      (3) Fully Isolated transmitters and receivers

      (4) iv. Discrete Signals, voltage Type: 24VDC.

3. Instrument and control system incorporates a general alarm area beacon.

Note: Reference PICS Instrument Listing Supplement to 13401 Process Instrumentation and Control Systems.

D.4.1.2 Analog Instrumentation

Flow Instrumentation enables operators to monitor pump discharge flow for the following processes:

1. Landfill Leachate Collection and Recovery System Pump Discharge Flow

2. Landfill Leak Detection and Recovery System Pump Discharge Flow

3. Landfill Secondary Leak Detection and Recovery System Pump Discharge Flow

4. Common Process Sump Discharge Flow

5. Process Wastewater from SSSTF Discharge Flow

6. Truck Loading Station Discharge Flow

7. Evaporation Pond Leak Detection and Recovery System Pump Discharge Flow

8. Make Up Raw Water from SSTF Discharge Flow.

Level Instrumentation enables operators to monitor liquids levels for the following:

1. Landfill Leachate Collection and Recovery System

2. Landfill Leak Detection and Recovery System

3. Landfill Secondary Leak Detection and Recovery System

4. Evaporation Pond(s) Leak Detection and Recovery System.

Temperature Instrumentation enables operators to monitor temperature levels for the following:

1. Crest Pad Buildings.

D.4.1.3 Discrete Instrumentation

Discrete Instrumentation enables operators to monitor pump, sumps, and Crest Pad Building operation status including:

1. Crest Pad Building Intrusion

2. Crest Pad Building Sump Levels

3. Crest Pad Building Control Power

4. Landfill Leachate Collection and Recovery System Pumps ON/OFF, AUTO and FAIL status

5. Landfill Leak Detection and Recovery System Pumps ON/OFF, AUTO and FAIL status

6. Evaporation Pond(s) Leak Detection and Recovery System Pumps ON/OFF, AUTO and FAIL status

7. Combined Process Sump Pump ON/OFF, AUTO and FAIL status

8. Combined Process Sump ALARM LEVELS.

D.4.2 PICS Programmable Logic Controller Architecture

PICS PLC architecture was designed around Allen Bradley Ethernet small SLC technologies.

Communication between PLCs, vendor-provided controllers, vendor panels, and motor control equipment includes the following protocols:

1. Allen Bradley Data Highway

2. Allen Bradley Analog and Discrete I/O

3. Ethernet.

PICS PLC architecture incorporates one central control panel in each Crest Pad Building. PLC I/O interfaces with instrumentation and process motor control equipment. PICS PLCs are programmed to automatically operate (start/stop) all process control equipment as well as process flow totals, equipment runtime, operation alarms, equipment, and building status.

Note: Reference PICS Control Block Diagram Drawing IN-203.

D.4.3 Control Panels

A large control panel mounted inside each Crest Pad Building houses an Ethernet SLC processor with its associated I/O modules, ancillary power supplies, termination devices, and control circuit protection devices. OIU and process flow and level indicators are mounted on front doors of control panels.

PLC processor and associated I/O modules located inside the control panels are programmed to control all process equipment.

Smaller local control panels mounted inside each Crest Pad Building house building sump monitoring and combined sump intrinsic safety control relays and switches.

Note: Reference PICS Control Panel Elevation and Internal Layout Drawing IN-203.

D.4.3.1 PLC Ethernet Control

Communication between Ethernet PLC Processors, OIU, and INEEL Supervisory Control and Data Acquisition (SCADA) takes place over LANs consisting of local 10/100MPS Ethernet Hubs and Ethernet cable system. Ethernet PLC processor inside each Crest Pad Building Control Panel is addressable over the LAN allowing each processor to share data and control points between each other.

D.4.4 PICS Operator Interface (OIU) Architecture

PICS OIU architecture is designed around Allen Bradley PanelView operating PMCS, over a LAN. OIU equipment communicating over the LAN includes:

1. OIU CRT with keyboard and Ethernet communications

2. Ethernet Copper Cabling.

D.4.4.1 OIU Programming and Process Display Screens

OIU is configured with process display screens enabling an operator to monitor and interface with the PICS PLC architecture. Operator is capable of setting process control and alarm set-points through OIU display screens. Display screens include the following:

1. Process Overview

2. Process Individual Control

3. Equipment Pop-Up

4. Flow Totalization

5. Process Alarms

6. Equipment Runtime

D.4.5 Back Up Power

Uninterruptible power supply (UPS) architecture incorporating UPS(s) sized by PICS and strategically placed so as to enable PLC and OIU networks to maintain monitoring of process control systems during a power failure, as well as provide for an orderly shutdown. UPS does NOT directly power process control equipment such as solenoids, motorized valves, pumps, and motors.

Appendix E

HVAC Calculations

SYSTEM SIZING SUMMARY

/stem: AC-1
ocation: Ineel, Idaho
repared by: CH2M HILL

Block Load 3.05
March 18, 2002
Page: 1

TABLE 1. SIZING DATA (COOLING)

Total Coil Load	10,560 BTU/hr	Load Occurs	July 20:00
Sensible Coil Load	10,560 BTU/hr	Outdoor Db/Wb	83.0/56.7 F
Total Zone Sensible	10,076 BTU/hr	Coil Conditions:	
Supply Temperature	55.0 F	Entering Db/Wb	81.2/63.1 F
Supply Air (Actual)	435 CFM	Leaving Db/Wb	55.0/54.1 F
Supply Air (Standard)	373 CFM	Apparatus Dewpoint	53.6 F
Ventilation Air	0 CFM	Bypass Factor	0.050
Direct Exhaust Air	0 CFM	Resulting Zone RH	40.1 %
Reheat Required	0 BTU/hr		
		Total Coil Load	0.88 Ton
Floor Area	336 sqft	Sensible Coil Load	0.88 Ton
Overall U-Value	0.083 BTU/hr/sqft/F	SQFT/Ton	381.84
Vent Air	0.00 CFM/sqft	Cooling	31.43 BTU/hr/sqft
Vent Air	25.00 CFM/Person	Cooling	1.29 CFM/sqft

TABLE 2. SIZING DATA (HEATING)

Heating Coil Load	10,943 BTU/hr	Heating	32.57 BTU/hr/sqft
Ventilation Load	0 BTU/hr	Heating	1.29 CFM/sqft
Total Zone Load	10,943 BTU/hr	Floor Area	336 sqft
Ventilation Airflow	0 CFM	Overall U-Value	0.083
Supply Airflow	435 CFM	Vent Air	0.00 CFM/sqft
		Vent Air	25.00 CFM/Person

TABLE 3. INPUT DATA (WEATHER)

Location	Ineel, Idaho		
Data Source	User Defined	Summer Dry-Bulb	99.0 F
Latitude	42.5 Degree	Coincident Wet-Bulb	62.0 F
Elevation	4,150.0 ft	Daily Range	34.0 F
Atmospheric Clearness #	1.05	Winter Dry-Bulb	-3.0 F

TABLE 4. INPUT (HVAC SYSTEM)

System Name	AC-1	THERMOSTAT SETPOINTS	
System Type	Clg and Warm Air Ht	Cooling (Occ.)	80.0 F
System Start	6:00	Cooling (Unocc.)	80.0 F
Duration	24 hrs	Heating	65.0 F
SIZING SPECIFICATIONS		RETURN AIR PLENUM	No
Supply	55.0 F	FAN	
Ventilation	25.00 CFM/person	Configuration	Blow-Thru
Exhaust	0.00 CFM	Static Pressure	1.50 in. wg.
FACTORS			
Coil Bypass	0.050		
Safety (Sens)	0 %		
Safety (Latent)	0 %		
Heating Safety	0 %		

TABLE 5. TOP TEN COOLING COIL LOADS

	Time	Sensible Ton	Total Ton		Time	Sensible Ton	Total Ton
1)	July 20:00	0.88	0.88	6)	August 21:00	0.87	0.87
2)	July 21:00	0.88	0.88	7)	July 22:00	0.87	0.87
3)	August 20:00	0.88	0.88	8)	August 18:00	0.87	0.87
4)	July 19:00	0.88	0.88	9)	July 18:00	0.87	0.87
5)	August 19:00	0.87	0.87	10)	August 22:00	0.86	0.86

tem: AC-1
:ation: Ineel, Idaho
pared by: CH2M HILL

Block Load 3.05
March 18, 2002
Page: 2

ABLE 6. ZONE SIZING DATA

Zone Name	Max. Cooling Sensible (BTU/hr)	Design Airflow Rate (CFM)	Design Time	Max. Heating Load (BTU/hr)	Design Flow Rate (CFM)
Landfill crest	10,076	435	July 20:00	10,943	-
	Total:	435		Total:	.00

SYSTEM SIZING SUMMARY

tem: AC-2
ation: Ineel, Idaho
pared by: CH2M HILL

Block Load 3.05
March 18, 2002
Page: 1

BLE 1. SIZING DATA (COOLING)

tal Coil Load	10,560	BTU/hr	Load Occurs	July 20:00	
nsible Coil Load	10,560	BTU/hr	Outdoor Db/Wb	83.0/56.7	F
tal Zone Sensible	10,076	BTU/hr	Coil Conditions:		
pply Temperature	55.0	F	Entering Db/Wb	81.2/63.1	F
pply Air (Actual)	435	CFM	Leaving Db/Wb	55.0/54.1	F
pply Air (Standard)	373	CFM	Apparatus Dewpoint	53.6	F
ntilation Air	0	CFM	Bypass Factor	0.050	
rect Exhaust Air	0	CFM	Resulting Zone RH	40.1	%
heat Required	0	BTU/hr			
			Total Coil Load	0.88	Ton
oor Area	336	sqft	Sensible Coil Load	0.88	Ton
erall U-Value	0.083	BTU/hr/sqft/F	SQFT/Ton	381.84	
nt Air	0.00	CFM/sqft	Cooling	31.43	BTU/hr/sqft
nt Air	25.00	CFM/Person	Cooling	1.29	CFM/sqft

BLE 2. SIZING DATA (HEATING)

ating Coil Load	10,943	BTU/hr	Heating	32.57	BTU/hr/sqft
ntilation Load	0	BTU/hr	Heating	1.29	CFM/sqft
tal Zone Load	10,943	BTU/hr	Floor Area	336	sqft
ntilation Airflow	0	CFM	Overall U-Value	0.083	
pply Airflow	435	CFM	Vent Air	0.00	CFM/sqft
			Vent Air	25.00	CFM/Person

BLE 3. INPUT DATA (WEATHER)

cation	Ineel, Idaho			
ta Source	User Defined	Summer Dry-Bulb	99.0	F
titude	42.5 Degree	Coincident Wet-Bulb	62.0	F
evation	4,150.0 ft	Daily Range	34.0	F
mospheric Clearness #	1.05	Winter Dry-Bulb	-3.0	F

BLE 4. INPUT (HVAC SYSTEM)

stem Name	AC-2	THERMOSTAT SETPOINTS	
stem Type	Clg and Warm Air Ht	Cooling (Occ.)	80.0 F
stem Start	6:00	Cooling (Unocc.)	80.0 F
ration	24 hrs	Heating	65.0 F
ZING SPECIFICATIONS		RETURN AIR PLENUM	No
pply	55.0 F	FAN	
ntilation	25.00 CFM/person	Configuration	Blow-Thru
haust	0.00 CFM	Static Pressure	1.50 in. wg.
CTORS			
il Bypass	0.050		
fety (Sens)	0 %		
fety (Latent)	0 %		
ating Safety	0 %		

BLE 5. TOP TEN COOLING COIL LOADS

	Time	Sensible Ton	Total Ton		Time	Sensible Ton	Total Ton
1)	July 20:00	0.88	0.88	6)	August 21:00	0.87	0.87
2)	July 21:00	0.88	0.88	7)	July 22:00	0.87	0.87
3)	August 20:00	0.88	0.88	8)	August 18:00	0.87	0.87
4)	July 19:00	0.88	0.88	9)	July 18:00	0.87	0.87
5)	August 19:00	0.87	0.87	10)	August 22:00	0.86	0.86

tem: AC-2
ation: Ineel, Idaho
pared by: CH2M HILL

Block Load 3.05
March 18, 2002
Page: 2

ABLE 6. ZONE SIZING DATA

Zone Name	Max. Cooling Sensible (BTU/hr)	Design Airflow Rate (CFM)	Design Time	Max. Heating Load (BTU/hr)	Design Flow Rate (CFM)
Evap Pond	10,076	435	July 20:00	10,943	-
	Total:	435		Total:	.00

THE "COM-Tec" CABINET AIR CONDITIONER

The Bard COM-Tec Cabinet Air Conditioner is the ideal product for virtually all types of cabinet applications. Typical applications would include telecommunication shelters, equipment buildings, instrumentation enclosures, security structures, numerous industrial applications, and many other applications requiring a commercial grade self-contained air conditioner. The many standard features combined with the optional features available make this product the ideal choice for the rugged requirements that commercial applications demand.

AC-1; 2

Standard Features

- Electrical rating 230/208-60-1, 230/208-60-3
- ~~Electric heat options - 0, 2 and 4 KW 1 Ph. and 0 or 3 KW 3 Ph.~~
- Energy efficient scroll compressor
- Built-in circuit breaker, accessible through front access panel
- Thermal expansion valve
- ~~2-speed condenser fan motor with changeover thermostat (at 90°F) for quieter operation~~
- Oversized condenser for operation to 125°F outdoor temperature
- Slope top to shed rain
- Beige pre-painted steel standard
- ~~Gray, White and Desert Brown color options~~ ~~(See model number nomenclature on page 3)~~
- Integrated condenser grilles for superior coil protection
- All installation and service access from front (fan) side
- Low ambient control (LAC)
  - ~~Fan cycling - down to 0° is standard~~
  - Refrigerant based - down to -20°F (factory installed option)
- High and low pressure switches
- Advanced ***compressor control module*** includes:
  - Time delay relay, adjustable from 30-300 seconds delay on break (delay on make equal to 10% of delay on break.)
  - High pressure switch lockout-soft and manual
  - Low pressure switch lockout-soft and manual (with 120 seconds bypass on start-up)
  - Alarm output signal
- Alarm relay (dry contacts)
- High and low pressure service ports, accessible from outside cabinet
- Easy access to electrical components
- Easy access to compressor and condenser fan assembly
- Unit mounts to wall using internal mounting holes
- Bottom support bracket included (not required for installation)
- Warranty - 1 year on parts and 5 years on compressor

Optional Accessories (Field Installed)

- SGC-2 supply grille 14 x 6, brushed aluminum
- RFGC-2 return air filter grille 14 x 12, brushed aluminum
- 7003-048 aluminum mesh 14 x 12 filter, (not included with RFGC-2)

Note: The following accessory items must be color coordinated with the basic unit. X is Beige (standard) color. See color option code below.

- EIFMC-2X economizer 300 CFM - used only with fan cycling LAC
- MBC-2X side mounting brackets

Color Options
X - Beige (Standard)
1 - White
4 - Buckeye Gray
5 - Desert Brown

AC-1;2

Specifications

MODEL	CT241-A02	CT241-A02	CT241-A04	CT241-B02	CT241-B03
Cooling Capacity Btuh	24,600	24,600	24,600	24,600	24,600
SEER ⓐ	10.0	10.0	10.0	10.0	10.0
Heating Capacity Btuh 240/208 ⓒ	None	6,800/6,100	13,660/10,230	None	10,240/7,660
Electrical Rating - 60 Hz	230/208-1	230/208-1	230/208-1	230/208-3	230/208-3
Operating Voltage Range	197 - 253	197 - 253	197 - 253	197 - 253	197 - 253
Compressor					
Volts	230/208	230/208	230/208	230/208	230/208
Rated Load Amps 230/208	10.5/12.5	10.5/12.5	10.5/12.5	7.5/8.5	7.5/8.5
Branch Circuit Selection Current	13	13	13	9	9
Locked Rotor Amps	61/61	61/61	61/61	55/55	55/55
Fan Motor & Condenser					
Fan Motor - HP/RPM	1/8 - 1,100	1/8 - 1,100	1/8 - 1,100	1/8 - 1,100	1/8 - 1,100
Fan Motor - Amps	0.8	0.8	0.8	0.8	0.8
Fan - DIA/CFM	16 - 1,400	16 - 1,400	16 - 1,400	16 - 1,400	16 - 1,400
Blower Motor & Evaporator					
Blower Motor - HP/RPM	1/4 - 1,100	1/4 - 1,100	1/4 - 1,100	1/4 - 1,100	1/4 - 1,100
Blower Motor - Amps	1.9	1.9	1.9	1.9	1.9
CFM Cooling & ESP ⓖ	700 - .10	700 - .10	700 - .10	700 - .10	700 - .10
Electric Heater					
Heater KW	None	2/1.5	4/3	None	3/2.3
Volts	-	240/208	240/208	-	240/208
Heater Amps	-	8.3/7.2	16.7/14.4	-	7.2/6.3
Electrical Ratings					
No. Field Power Circuits	1	1	1	1	1
Minimum Circuit Ampacity ⓗ	19	19	24	14	14
Max. Fuse or Circuit Breaker ⓘ	30	30	30	20	20
Field Wire Size ⓘ	#12	#12	#10	#14	#14
Shipping Weight - Lbs.	260	260	250	250	250

ⓐ Tested and rated in accordance with ARI Standard 210/240-89.
ⓚ Does not include heat from indoor motor.
ⓛ Deduct 30 CFM for 208V operation.
ⓗ These "Minimum Circuit Ampacity" values are to be used for sizing the field power conductors.
ⓘ Maximum size of the time delay fuse or HACR type circuit breaker for protection of field wiring conductors.
ⓔ Based on 75°C copper wire. All wiring must conform to the National Electrical Code and all local codes.

IMPORTANT: While this electrical data is presented as a guide, it is important to electrically connect properly sized fuses and conductor wires in accordance with the National Electrical Code and all existing local codes.

CT241 Blower Air Flow @ 230 Volts

No return filter grille or filter

ESP	Med. Speed Dry	Med Speed Wet	High Speed Dry	High Speed Wet
0	1,012	980	1,070	1,038
0.1	925	893	982	950
0.2	889	827	924	892
0.3	794	763	855	823
0.4	722	690	776	743
0.5	642	610	694	662
0.6	537	505	598	566

With return filter grille and 1" washable filter

ESP	Med. Speed Dry	Med Speed Wet	High Speed Dry	High Speed Wet
0	847	816	880	848
0.1	760	728	792	760
0.2	694	662	734	702
0.3	625	597	656	633
0.4	557	525	585	553
0.5	477	446	504	472
0.6	372	340	408	376

Note: Reduce airflow by 30 CFM for 208V operation.

Minimum Clearances Required to Combustible Materials (Inches)

Models	Supply Air Duct	Cabinet
CT241	0	0

Clearances Required for Service Access and Adequate Condenser Air Flow (Inches)

Models	Left Side	Right Side	Front
CT241	3	3	36

Application Data - Applies to All Models

Dry Bulb/① Wet Bulb °F	Cooling Capacity	All Temperature Entering Outdoor Coil °F										
		75°	80°	85°	90°	95°	100°	105°	110°	115°	120°	125°
75/57	Total Cooling	22,900	22,400	21,800	21,200	20,500	19,800	19,000	18,200	17,300	16,300	15,300
	Sensible Cooling	21,700	21,100	20,500	19,900	19,300	18,700	18,100	17,500	17,000	16,200	15,100
80/67	Total Cooling	28,700	27,900	27,000	26,000	24,800	23,900	22,800	21,700	20,500	19,200	17,900
	Sensible Cooling	18,300	17,800	17,200	16,700	16,200	15,600	15,100	14,600	14,200	13,700	13,200
85/72	Total Cooling	33,800	32,300	30,700	29,200	27,700	26,100	24,600	23,100	21,600	20,000	18,500
	Sensible Cooling	18,500	17,900	17,200	16,500	15,900	15,200	14,400	13,700	13,000	12,200	11,400

① Return air temperature °F.

Application Data - Applies Only to Refrigerant Based Low Ambient Control Versions

Dry Bulb/① Wet Bulb °F	Cooling Capacity	All Temperature Entering Outdoor Coil °F									
		-20°	-10°	0°	10°	20°	30°	40°	50°	60°	70°
75/57	Total Cooling	24,600	24,800	24,400	24,200	24,000	23,800	23,600	23,400	23,200	23,000
	Sensible Cooling	23,200	23,000	22,900	22,700	22,400	22,300	22,200	22,000	21,900	21,700
80/67	Total Cooling	30,700	30,500	30,300	30,100	29,900	29,700	29,500	29,300	29,100	28,900
	Sensible Cooling	19,900	19,700	19,600	19,400	19,200	19,100	19,000	18,800	18,700	18,500
85/72	Total Cooling	36,800	36,600	36,400	36,200	36,000	34,800	34,600	34,400	34,200	34,000
	Sensible Cooling	20,500	20,300	20,100	19,900	19,700	19,500	19,300	19,000	18,900	18,700

① Return air temperature °F.

Model Number Nomenclature

CT 24 1 — A 04 X X X X X J

- **CT** — Model Number
- **24** — Capacity - 2 Ton
- **1** — Revision
- **—** — Low Ambient Control
  - — - Standard fan cycling to 0°F
  - R - Refrigerant based to -20°F
- **A** — Volts - Hertz - Phase
  - A - 230/208 - 60 - 1
  - B - 230/208 - 60 - 3
- **04** — KW
  - 0Z - No KW
  - 02 - 2 KW 1 Ph.
  - 04 - 4 KW 1 Ph.
  - 03 - 3 KW 3 Ph.
- **X** — Color Options
  - X - Beige (Standard)
  - 1 - White
  - 4 - Burkaya Gray
  - 5 - Desert Brown
- **X** — Coil Options
  - X - Standard
  - 1 - Phenolic Coated Evaporator
  - 2 - Phenolic Coated Condenser
  - 3 - Phenolic Coated Evaporator and Condenser
- **J**

AC-1;2 - CT 241 - A0 2

Cabinet Dimensions

FRONT VIEW

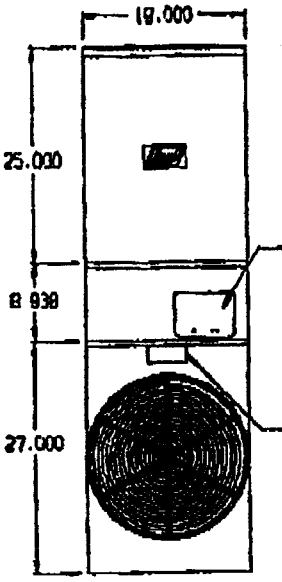

RIGHT SIDE VIEW

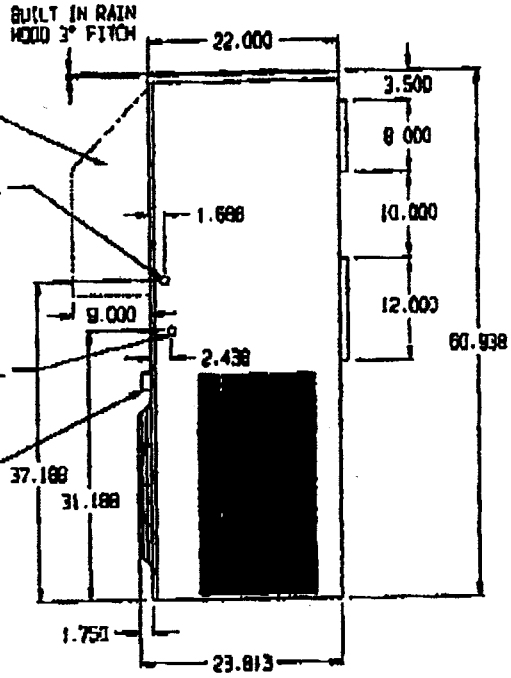

BACK VIEW

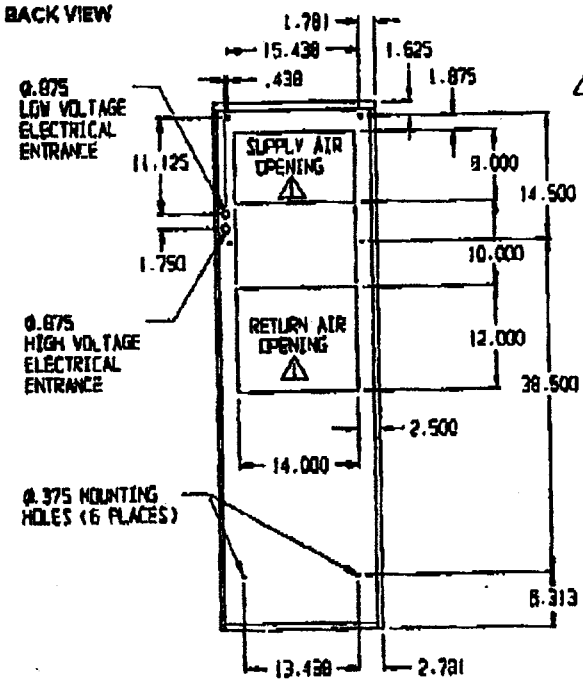

⚠ OPENINGS IN WALL SHOULD BE OVERSIZED BY .250" TO ALLOW FOR EASE OF UNIT INSERTION

MIS-1034

BARD MANUFACTURING CO
BRYAN, OHIO 43506

Since 1914 . . . Moving Ahead, just as planned

Due to our continuous product improvement policy, all specifications subject to change without notice.

Before purchasing this appliance, read important energy cost and efficiency information available from your retailer.

Form No. S3327
May, 1999
Supersedes S3327-1295

TRANE

UH-DS-6
April 1998
First Reprint January 1999

UH-1; 2

Electric Forced Air Wall and Ceiling Heaters

UH-DS-6

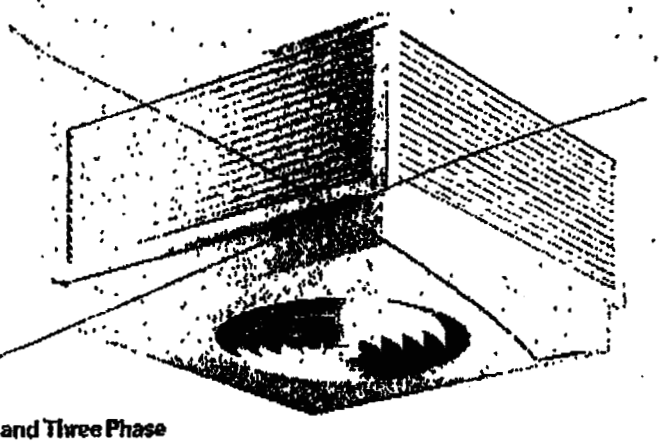

- Model UHCA
- 2000-5000 Watts
- 208, 240 V Single and Three Phase
- 277 V Single Phase

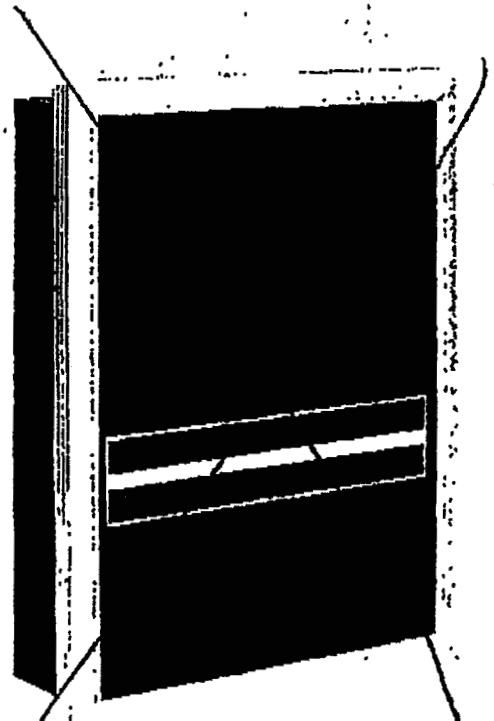

- Model UHAA
- Series 3320

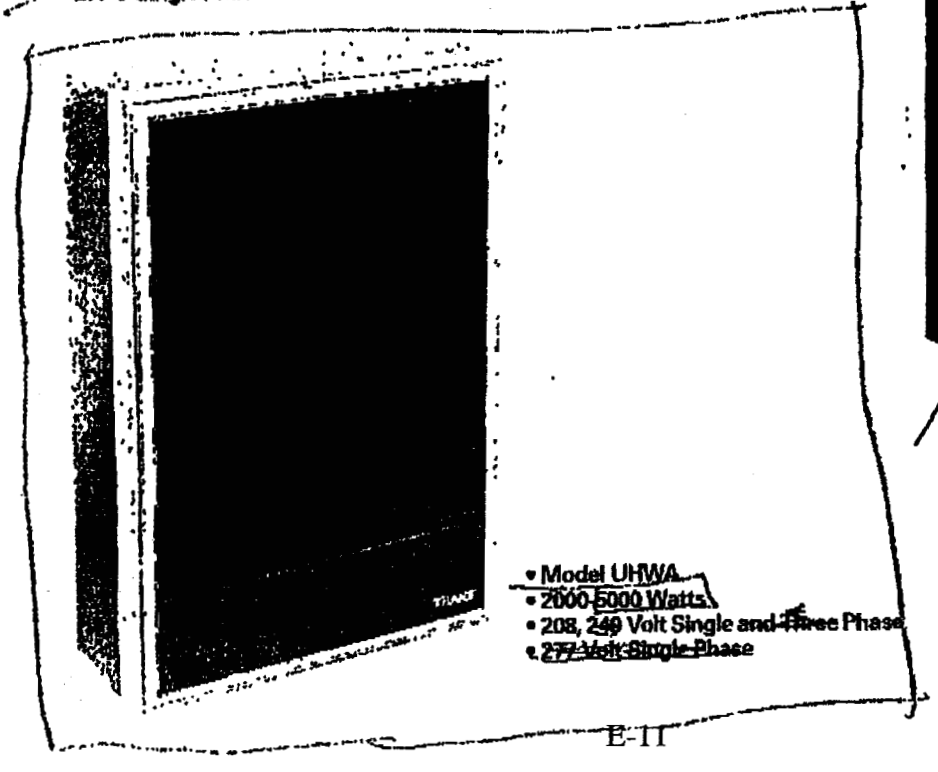

- Model UHWA
- 2000-5000 Watts
- 208, 240 Volt Single and Three Phase
- 277 Volt Single Phase

UH-1; 2

TRANE

General Data

Model UHWA Series 20 and 50

Table 4-1 — Electric Wall-Mounted Unit Heaters — Series 20

Watts	Model No. UHWA	Order No. 233	Element + Motor Voltage	Element Phase	Ship Wt. Lbs	Ship Wt. Kg	BTU	Degree F Air Rise	Degree C Air Rise
2000 Watts	021A2AT	-400	208	1	41	18.6	6,826	27	15
	021B2AT	-402	240	1					
	021C2AT	-404	277	1					
3000 Watts	031A2AT	-406	208	1	41	18.6	10,239	41	23
	031D2AT	-408	240	1					
	031C2AT	-410	277	1					
4000 Watts	041A2AT	-412	208	1	41	18.6	13,652	57	32
	041B2AT	-414	240	1					
	041C2AT	-416	277	1					
	043A2AT	-418	208	3					
	043B2AT	-420	240	3					
5000 Watts	051A2AT	-422	208	1	41	18.6	17,065	73	41
	051B2AT	-424	240	1					
	051C2AT	-426	277	1					
	053A2AT	-428	208	3					
	053B2AT	-430	240	3					

Note: ONLY thermostat and/or contactor may be built-in on Series 20 wall heaters.

Table 4-2 — Electric Wall-Mounted Unit Heaters — Series 50

Watts	Model No. UHWA	Order No. 233	Element + Motor Voltage	Element Phase	Ship Wt. Lbs	Ship Wt. Kg	BTU	Degree F Air Rise	Degree C Air Rise
2000 Watts	021A5AT	-431	208	1	54	24.5	6,826	27	15
	021B5AT	-433	240	1					
	021C5AT	-435	277	1					
3000 Watts	031A5AT	-437	208	1	55	24.9	10,239	41	23
	031B5AT	-439	240	1					
	031C5AT	-441	277	1					
4000 Watts	041A5AT	-443	208	1	55	24.9	13,652	57	32
	041B5AT	-445	240	1					
	041C5AT	-447	277	1					
	043A5AT	-449	208	3					
	043B5AT	-451	240	3					
5000 Watts	051A5AT	-453	208	1	55	24.9	17,065	73	41
	051B5AT	-455	240	1					
	051C5AT	-457	277	1					
	053A5AT	-459	208	3					
	053B5AT	-461	240	3					

Note: If circuit breaker and/or transformers are required, the Series 50 wall heater must be ordered. 1 Watt Equals 3.413 Btu.

TRANE

Controls

Model UHWA Series 20 and 50

Control Systems	WD	Heater Type
Type of Control		
Built-in thermostat control	1	20 & 50 (1)
Wall mounted thermostat, heater voltage, line duty. For single phase heaters use SP or DP (DP if used as a disconnect) of sufficient capacity. For three-phase heaters use TW1512 which cycles two poles simultaneously.	2	20 & 50 (1)
Wall mounted, heater voltage, pilot duty, one or more heaters. Heater has built-in contactor with heater voltage coil.	3	20 & 50 (1)
Wall mounted, 120 V, pilot duty, one or more heaters. Heater has built-in contactor with 120 V coil.	4	20 & 50
Wall mounted, 24 V, pilot duty, one or more heaters. Heater has built-in contactor with 24 V coil.	4	20 & 50
Wall mounted, 24 V. Heater has built-in contactor with 24V coil and heater voltage/24 V transformer.	5	50 Only
Wall mounted, pilot duty, 120 V. Heater has built-in contactor with 120V coil and heater voltage/120 V transformer.	5	50 Only

(1) If built-in circuit breaker and/or built-in transformer are desired, 50 Series must be ordered.
Transformer with 24 V secondary (A1) available on all models.
Transformer with 120 V secondary (A2) available on following models only:
All three-phase models
277 V one-phase up to 4000 watts
208 and 240 V one phase up to 3000 watts

Accessories

For accessory built-in controls:

- T Built-in thermostat breaks all ungrounded conductors in OFF position.
- C Circuit breaker (Series 50 only) arranged to be disconnected before removal of front with line side terminals covered for safe maintenance. Additional control circuit switch installed if required.
- R Built-in contactor holding coil same as heater voltage.
- R1 Built-in contactor 24V holding coil.
- R2 Built-in contactor 120V holding coil.
- A1 Built-in control transformer, (Series 50 only) 24V secondary.
- A2 Built-in control transformer, (Series 50 only) 120V secondary available on all three-phase heaters, up to 3000 watts on 208 and 240V, one-phase and up to 4000 watts on 277V, 1-phase.

For semi-recessed and surface mounting:

20 Series

- 20 EX 34 Extension sleeve for full surface mounting.
- 20 EX 16 Extension sleeve for extending front additional 2" (50.8 mm) from finished wall. Heater recesses 2 1/4" (57.2 mm).
- 20 EX 8 Extension sleeve for extending front additional 1" (25.4 mm) from finished wall. Heater recesses 3 1/4" (82.6 mm).
- 20 Box Must be used on all heater installations.

50 Series

- 50 EX 34 Extension sleeve for full surface mounting.
- 50 EX 16 Extension sleeve for extending front additional 2" (50.8 mm) from finished wall. Heater recesses 2 1/4" (57.2 mm).
- 50 EX 8 Extension sleeve for extending front additional 1" (25.4 mm) from finished wall. Heater recesses 3 1/4" (82.6 mm).
- 50 Box Must be used on all heater installations.

TRANE

Dimensional Data

Model UHWA Series 20 and 50

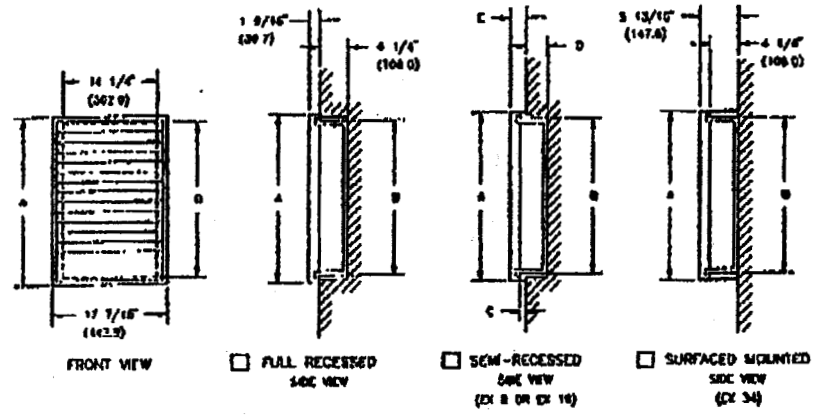

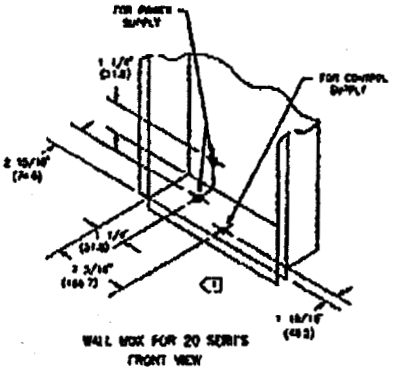

20/50 DIMENSIONS

	UNIT	A	B	EXTENSIONS EX 8 C	EX 8 D	EX 8 E	EX 16 C	EX 16 D	EX 16 E
2	20 SERIES	21 1/32" (545.3)	19 3/8" (492.1)	1" (25.4)	3 1/4" (82.6)	2 5/16" (58.1)	2" (50.8)	2 1/4" (57.2)	3 9/16" (90.5)
1	50 SERIES	25 1/32" (635.8)	23 1/16" (585.8)	1" (25.4)	3 1/4" (82.6)	2 5/16" (58.1)	2" (50.8)	2 1/4" (57.2)	3 9/16" (90.5)
3									

1 FOR SEMI-RECESSED AND SURFACE MOUNTING, USE THE FOLLOWING EXTENSION SLEEVES.
EX 34 EXTENSION SLEEVE FOR FULL SURFACE MOUNTING.
EX 16 EXTENSION SLEEVE FOR EXTENDING FRONT AUDITIONAL 2" (50.8) FROM FINISHED WALL. HEATER RECESSES 2 1/4" (57.15).
EX 8 EXTENSION SLEEVE FOR EXTENDING FRONT RECESSES 3 1/4" (82.55)

2 ONLY THERMOSTAT AND/OR CONTACTOR MAY BE BUILT-IN THE SERIES 20 HEATERS

3 IF CIRCUIT BREAKER AND/OR TRANSFORMER ARE REQUIRED SERIES 50 ONLY MUST BE ORDERED.

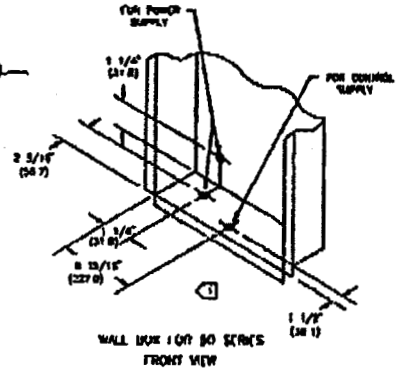

Typical Heater Element, Motor, "Zero Voltage Reset" Thermal Cutout

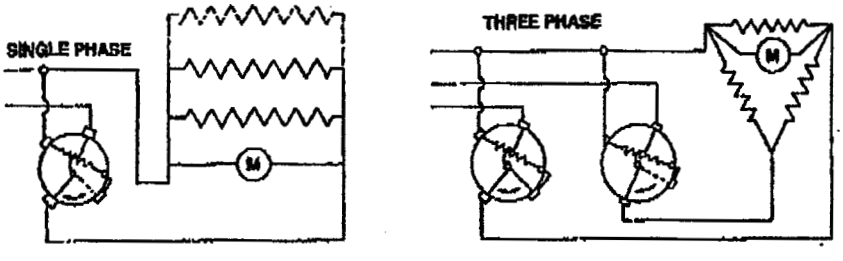

Control System Wiring Diagrams

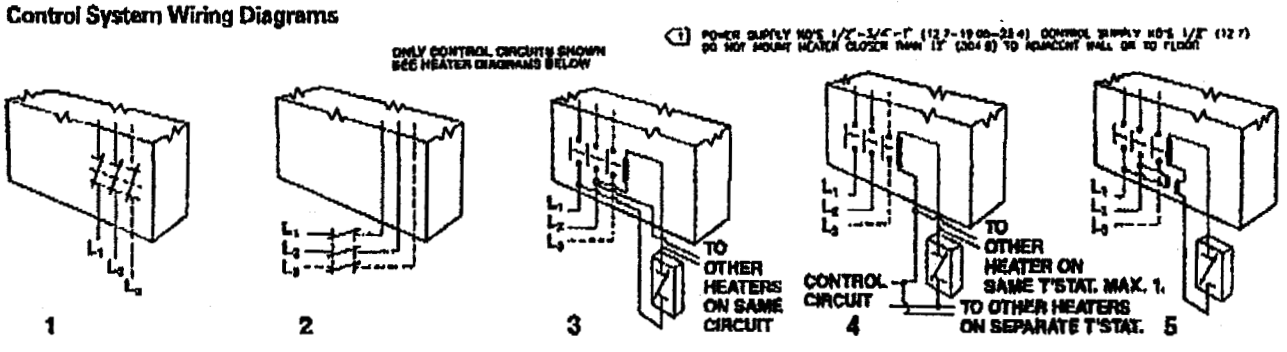

Dimensions in ( ) are shown in millimeters.

TRANE

Mechanical Specifications

Model Unit
Series 20 and 50

Contractor shall supply and install heavy-duty, wall-mounted forced-air electric unit heaters of the wattage, voltage and phase as indicated on the plans. The heater is designed to provide an even distribution of heated air to the space by drawing return air in the periphery of the heater across the element, which shall then be discharged from the center section of the heater by means of an electric motor and axial flow fan blade.

Heaters are recessed to extend no more than 1 ½" (38.1 mm) from the finished wall, surface mounted to extend no more than 5 ¾" (146.1 mm) from the finished wall or semi-recessed to extend no more than 2 ½" (63.5 mm) from the finished wall.

Enclosure
Heater front can withstand, with less than 1/16" (1.6 mm) permanent distortion, 10.8 ft. lbs (324 poundals) impact and 400 lbs. (181.4 kg) static force applied to an 8 sq. in. (5160 sq mm) area at center grille location.

The combination return and supply grille assembly are constructed of 1/16" (1.6 mm) x ⅜" (9.5 mm) rounded edge horizontal steel. Louvers are spaced for maximum opening of ¼" (6.4 mm). Louvers are welded at every intersection to three evenly spaced 1/16" (1.6 mm) diameter vertical members and completely framed in a heavy-gauge natural anodized aluminum extrusion. Front assembly are be attached to the chassis by hidden tamper-resistant (Allen-head) machine screws. All other parts are 16-gauge (1.5 mm thickness) steel zinc coated both sides painted in a high gloss bronze colored baked enamel finish.

Motor
Motors are permanently lubricated unit bearing, totally enclosed, shaded pole type with impedance protection. Motors will operate at no more than 1400 rpm (23.3 rps) and are the same voltage as the heater. A protective shield shall surround the motor to separate return air from heated air.

Performance
Heaters have a rating of 245 cfm (115.6 l/s) at 660 fpm (3352.8 mm/s) with a maximum temperature rise of 73 F (40.6 C).

Elements
Element assemblies consist of two or three corrosion-resistant steel sheathed type elements mechanically bonded to common corrosion-resistant steel fins. Each sheathed element consist of helically coiled nickel chromium alloy-resistant wire completely embedded in and surrounded by magnesium oxide, enclosed and wedged into corrosion-resistant steel sheaths. Elements have 2" (50.8 mm) cold conductor pins extending into the sheath and have a density of no more than 60 watts per inch (25.4 mm).

Thermal Overload
Heaters are equipped with a "zero voltage reset" thermal overload which disconnects elements and motor in the event normal operating temperatures are exceeded. For safety, if opened due to abnormal temperatures, thermal overload will remain open until manually reset by turning heater off for five minutes. Automatic reset thermal overloads which allow the element to continue to cycle under abnormal conditions will not be accepted.

Warranty
Heaters are warranted for 5 years.

Approval
Heaters are Underwriters' Laboratories listed. Heaters are conform to Underwriters' Laboratories, Inc. Standard 1025, Paragraphs 31.20, 31.21, 31.22 and 31.23. Heaters not conforming to these paragraphs will not be acceptable.

Optional Control Systems
Heaters are operated from wall-mounted, line voltage, heavy-duty (tamper-resistant) thermostats.

Heaters with built-in, pre-wired contactors are operated from wall-mounted, line voltage, pilot duty (tamper-resistant) thermostats.

Heaters with built-in, pre-wired contactors (and control transformers) will be operated from wall-mounted, pilot duty (24 V) or (120 V) wall-mounted tamper-resistant thermostats.

Heaters are controlled by integrally mounted thermostats. Thermostats are heavy-duty, hydraulic type with a range of 40 F (4.4 C) to 80 F (26.7 C) and with remote sensing bulb placed in the return air. Thermostats shall be electrically rated at least 125 percent of heater rating. Thermostats also act as a disconnect by breaking all ungrounded conductors in the OFF position. (Thermostat control knob is covered by a 16-gauge (1.5 mm thickness) tamper-resistant access plate to prevent adjustment by unauthorized personnel.)

Contactors
Where required, heaters are equipped with heavy-duty, definite purpose contactors with flame path separators and dust covers. Contactors will cycle all ungrounded conductors. Contactors have holding coils (of the same voltage as the heater), or 120 volts or 24 volts.

Contactors are be rated at least 125 percent of heater rating and are UL approved for 250,000 cycles.

Control Transformers
Heater are equipped with a Class 2 control transformer, sealed rating of 20 VA, to supply control circuits of 24 volts or 120 volts. (120 volt secondaries not available in single phase heaters over 3 kW.)

Circuit Breakers
Heaters equipped with built-in circuit breakers in order to allow the heaters to be supplied from feeder taps. A separate switch providing a positive off for control circuits are included where required. Circuit breakers and control switches are arranged so that all line side conductors will be separately enclosed when heater front is removed for servicing so that no current-carrying parts are accessible without the use of additional tools.

Appendix F

Structural Calculations

INEEL CERCLA DISPOSAL FACILITY (ICDF)

Crest Pad Buildings

&

Loading Area

Structural Calculations

To: Idaho National Engineering & Environmental Laboratory (INEEL)

IDAHO

Ch2mHill

Project: 162870

Bellevue, Wa

March/20/2002

INEEL CERCLA DISPOSAL FACILITY (ICDF)

Structural Calculations

TO: Dean Bose/SEA

COPIES: Mike Rimbold/SEA
Jay Dehner/SPK

FROM: Shukre Despradel/SEA
Linda Korbus/SEA
Shinji Goto/SEA

DATE: September 24, 2001

This set of calculations consider the Structural Analysis and Design of the Concrete Foundation and Walls for the Crest Pad Buildings and the Truck Loading Pad.

Loads considered were as follows:

1-For the Truck Load Pad:

Self Weight of the Structure

Traffic Load (HS15-44 based on AASHTO Std. Code)

2-For the Crest Pad Building Foundation

Super imposed Dead Load (SDL) due to Mechanical & Electrical Equipment

Live Load

Reaction from the prefabricated metal building due to Self Weight, Seismic Load, Snow Load and Wind Load

Loads were estimated based on DOE-STD-1020 Code. Structures were defined as PC=1 (natural phenomena performance category) conform to DOE-STD-1021.

The truck pad was analyzed using a 3D Finite element model were the truck was modeled as a series of concentrated loads. There were considered 3 loading positions to establish the internal forces envelope.

The Crest Pad Building Foundation was analyzed assuming shallow isolated foundations. Soil bearing capacity and uplift was observed. Concrete design was made using ACI 318-99.

TABLE OF CONTENTS

Truck Loading Area

1- Soil Properties
2- Load Table
3- Geometry
4- Basic Calculations and Combinations
5- Slab Capacity: Bending & Shear
6- Curb Capacity: Shear
7- Inverted Curb Capacity: Bending & Shear
8- Finite Element Analysis:
   - Geometry
   - Load Positions
   - Analysis of Results

Crest Pad Building: Concrete Walls & Foundation

1- Geometry
2- Roof Framing Plan
3- Weights
4- EQ Load; Analysis
5- Wind Load; Analysis
6- Snow Load and Roof Live Load
7- Summary of Loads
8- Footing Uplift Check
9- Ftg Capacity
10- Sump Design
11- Slab on Grade Additional Loads
12- Slab on Grade Capacity

13- South Wall; Analysis & Design

14- Finite Element Model:

-Geometry

-Boundary Conditions

-Results

15- Soil Properties

— TRUCK LOADING AREA —

Concrete Pavement Design:

REF.:
1) AASHTO STD. CODE

1) Soil Properties:

1- Modulus of Subgrade Reaction:

$K_v = 600$ KCF $= 347$ PCI

2- Allowable Soil Bearing Pressure:

$q_a = 8.0$ KSF.

2) Truck Loading:

HS15-44 (AASHTO STD. CODE).

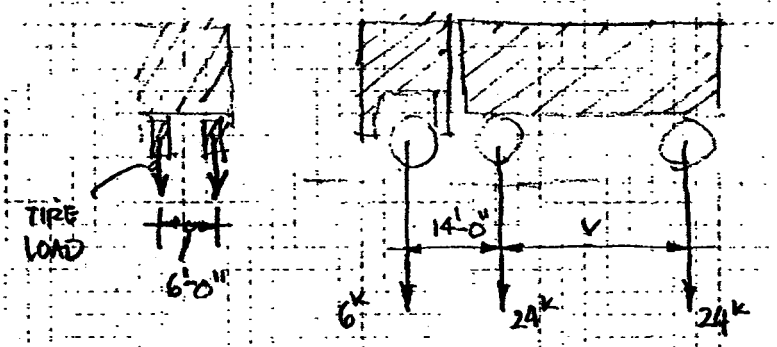

V = VARIABLE SPACING
14' → 30'

AXLE LOAD.

OR
EQUIVALENT LOAD:

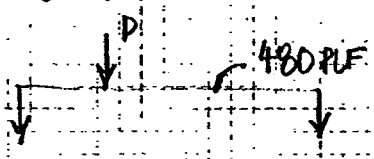

$P = \begin{cases} 13.5^k \text{ (moment)} \\ 19.5^k \text{ (shear)} \end{cases}$

3) Curb Loading:

V = 500 PLF @ top of the curb.

Impact: $I = \frac{50}{L+125} = \frac{50}{50+125} = \underline{1.29}$ (NOT TO BE INCLUDED in curb check).

GEOMETRY:

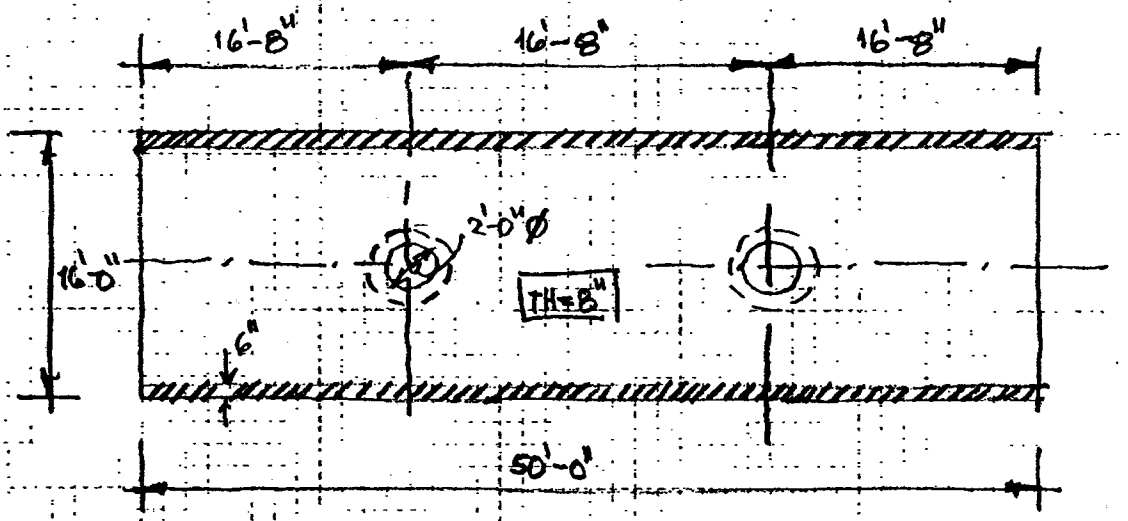

LOAD POSITIONS:

P_F = FRONT wheel load

P_R = REAR wheel Load.

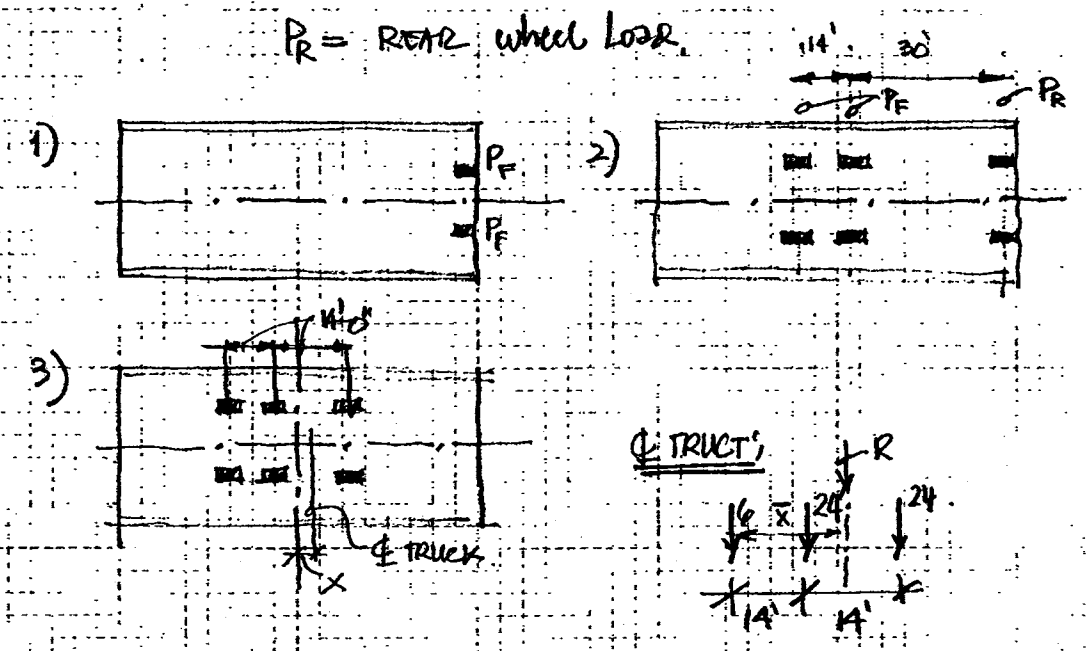

℄ TRUCT:

$54\bar{X} = 24(14+28)$

$\bar{X} = 18.67'$

$X = \frac{1}{2}(18.67-14) = \underline{\underline{2.33'}}$

BASIC CASES:

SOIL:

$$K_S = K A_{CONTACT}$$

KCF

SO:

$$K_S = 600A;$$

FOR $A = 4FT^2$; $K_S = 2400K/FT$.

$A = 3FT^2 \rightarrow K_S = 1800K/FT$ etc... —

CONTACT AREA DEPENDS ON FE MODEL. —

DESIGN COMBINATIONS: — AASHTO —

$$U = 1.3DL + 1.67(U + I)$$

$$= 1.3DL + 2.15U.$$

TRAFFIC LOAD.

CH2MHILL SUBJECT IDCF INEEL BY SD
SHEET NO. 4 of 49 DATE Sep 09/01
PROJECT NO. 162870.7A.N

SLAB CAPACITY: [REF.: ACI 318-99].

BENDING:

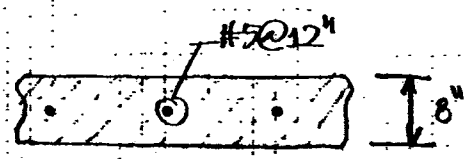

$A_s = 0.31\ in^2/FT$

$A_{s\,min} = 0.002bd = .002 \times 12 \times 4 = .096\ in^2/FT$ ok!

$a = \frac{A_s f_y}{.85 f'_c b}$ $f'_c = 4\ ksi$; $f_y = 60\ ksi$

$a = 0.46"$; $\phi M_n = \overset{0.9}{\phi} A_s f_y \left(d - \frac{a}{2}\right)/12$

$= 5.2\ KFT/FT$

SHEAR:—

$\phi V_n = \phi V_c$;

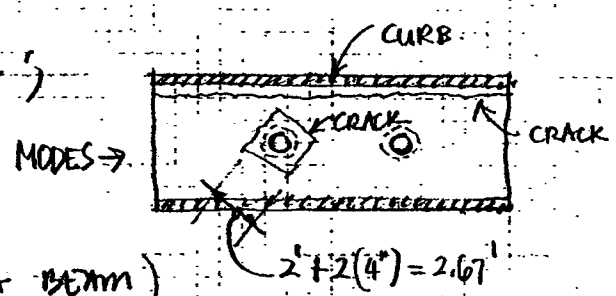

MODE 1: (AS A BEAM)

$V_c = 2\sqrt{f'_c}\, bd = \frac{2}{1000}\sqrt{4000}\ 12 \times 4 = 6^k/FT$; $\phi V_n = 5.1^k/ft$.

MODE 2: (PUNCHING SHEAR AROUND DUMP)

$V_c = 4\sqrt{f'_c}\, b_o d$

$b_o = 4 \times 2.67$

$V_c = 130^k$, $\phi V_n = 110^k$;

TIRE SHEAR: LET'S ASSUME

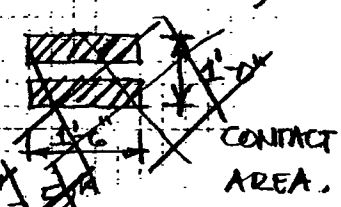

Assuming 20 in² Contact Area

$L = 4.47"$

$b_o = \left(2\frac{d}{2} + 4.47\right)4$ ~~$\phi V_c = \phi .004\sqrt{4000} \times 5.12 \times 4" = 52^k$~~

$= 8.47" \times 4 = 33.88$

$\phi V_c = \phi .004\sqrt{4000} \times 33.88 \times 4 = 29^k/TIRE$

$P_{TIRE} = 12^k/2 = 6^k$

CURB:

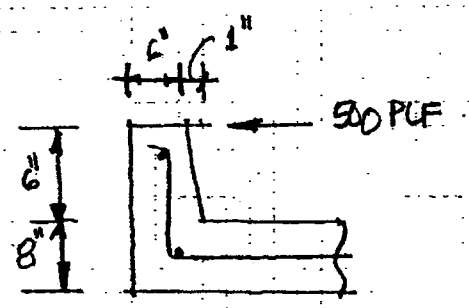

$$\phi V_n = .002\sqrt{f'_c}\, bd\,\phi = .85 \cdot .002\sqrt{4000}\ 12'' \cdot 3''$$

$$= 3.87\ \text{KLF} \gg 500\ \text{PLF}$$

ok!

INVERTED CURB:

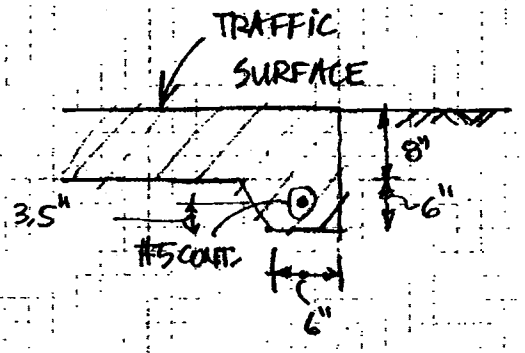

$d = 10.5''$

$A_s = 0.31\ \text{in}^2$

$a = 0.91\ \text{in}$

$\phi M_n = 14\ \text{KFT}$

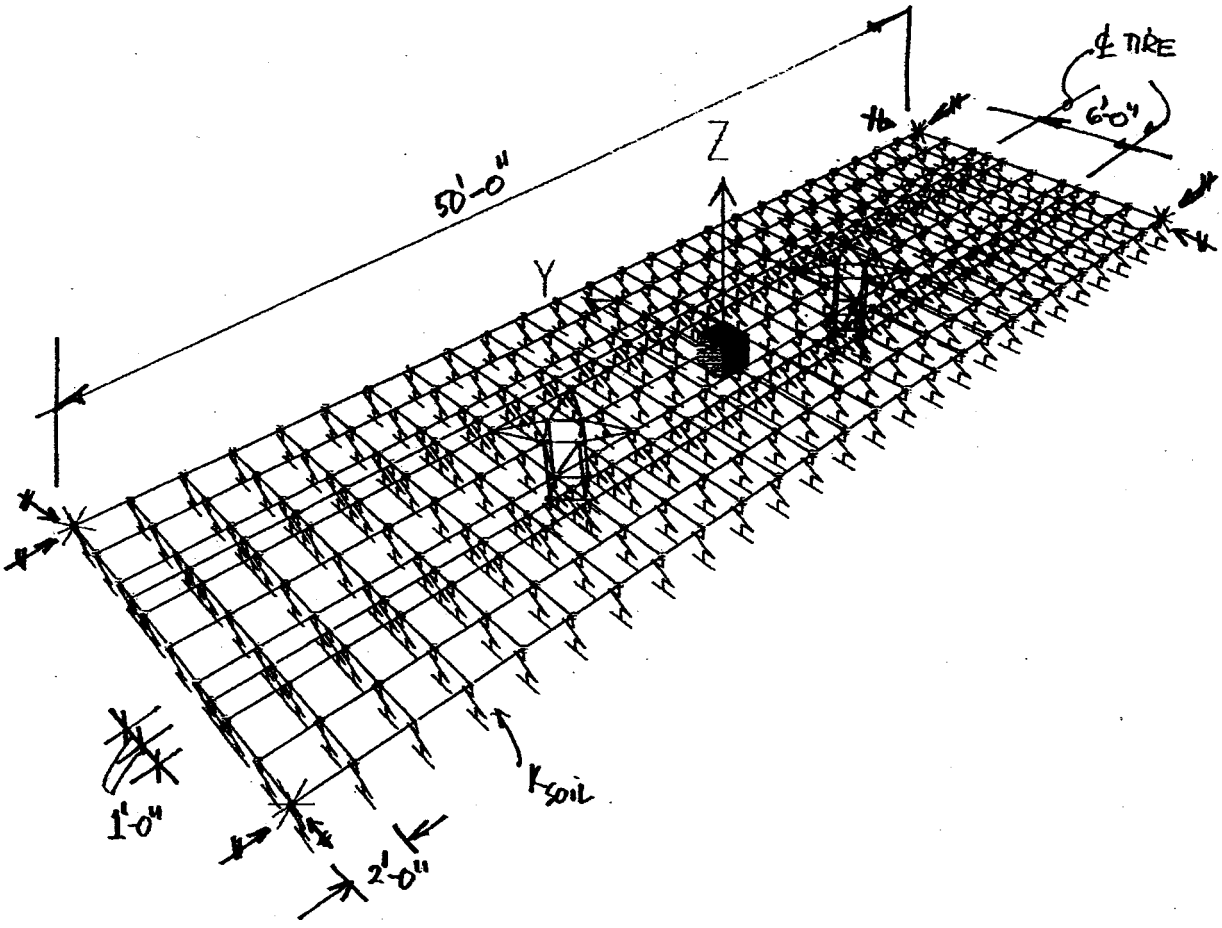

SAP2000 v7.40 - File:ConcPad - 3-D View - Kip-ft Units

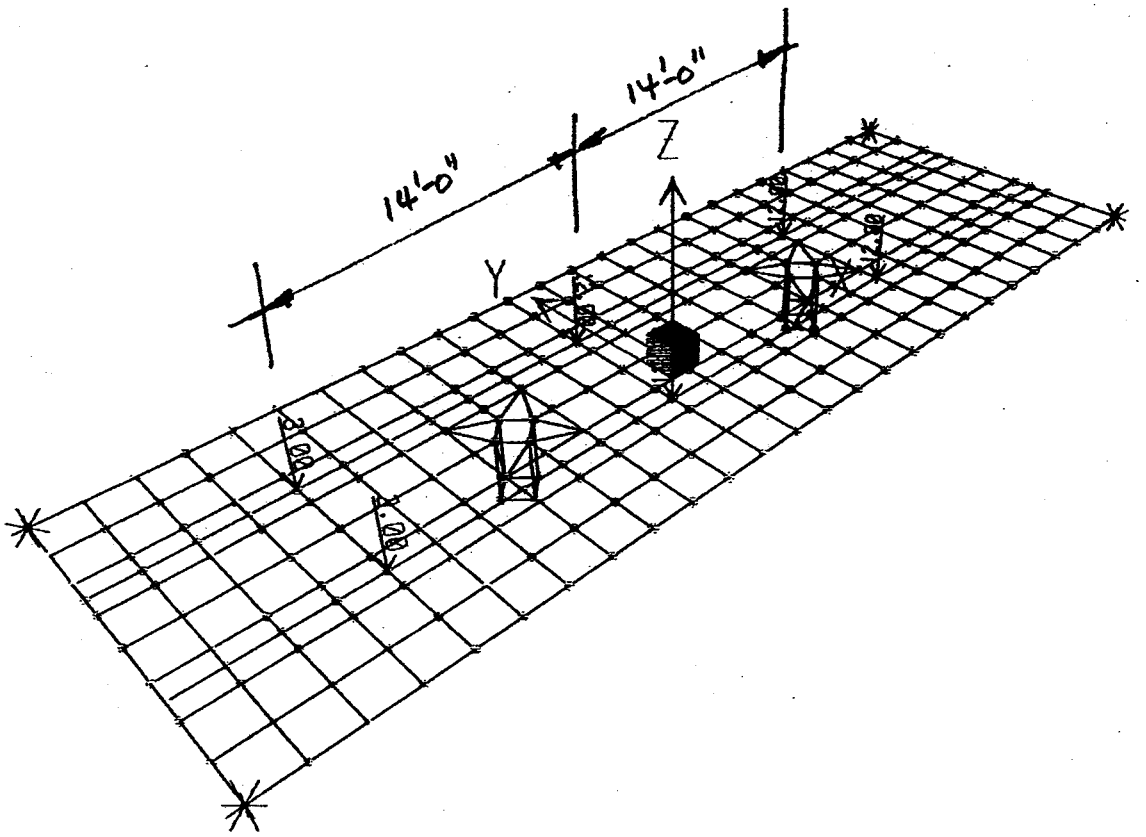

TRAFFIC LOAD 1.

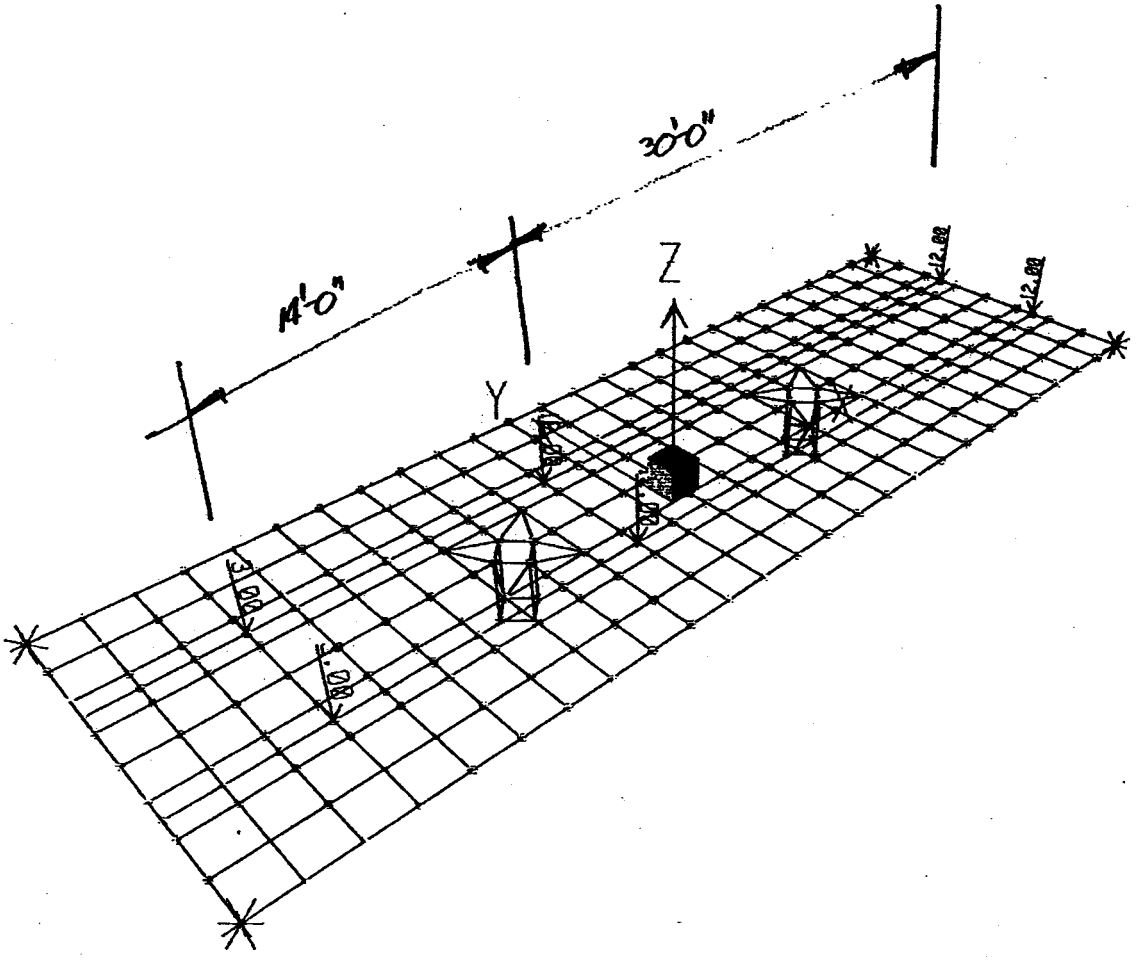

SAP2000 v7.40 - File:ConcPad - Joint Loads (TL2) - Kip-ft Units

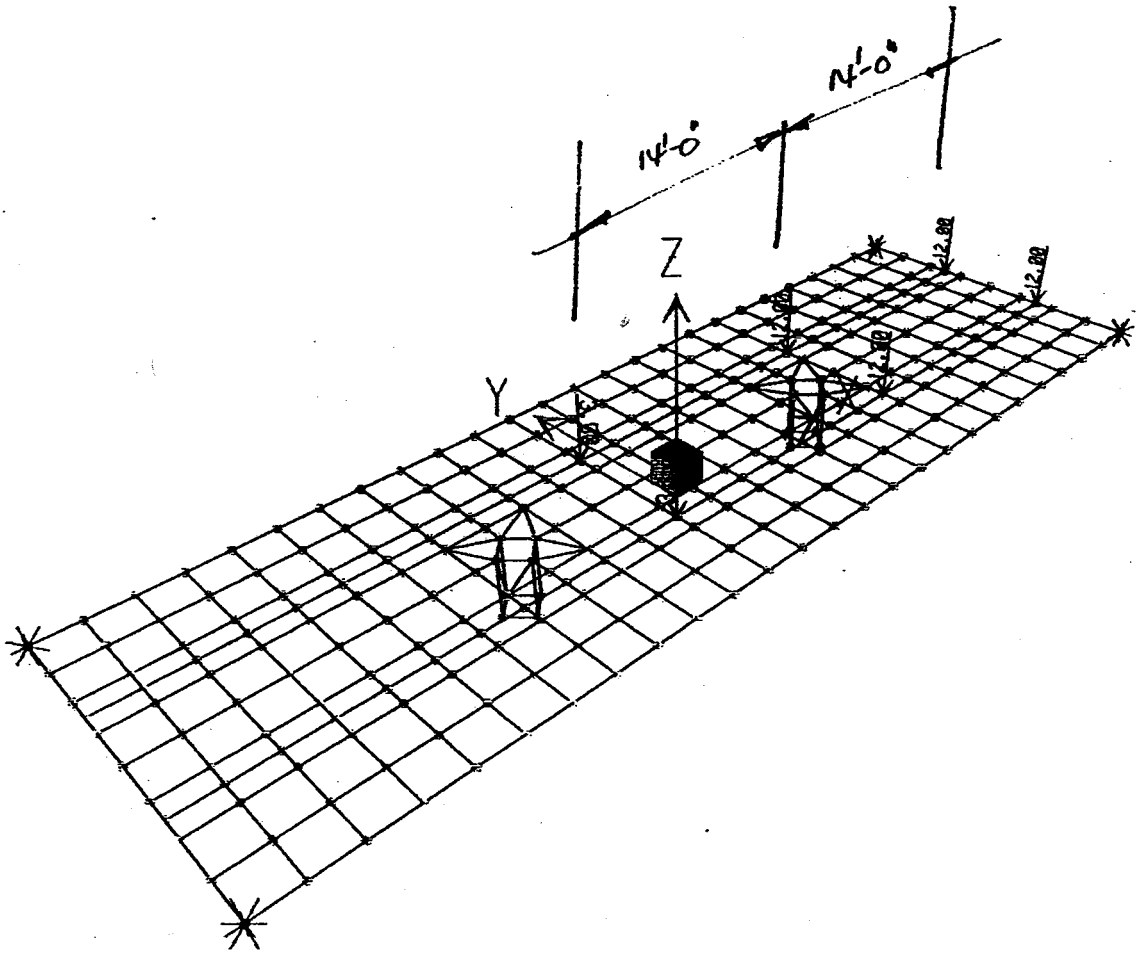

SAP2000 v7.40 - File:ConcPad - Joint Loads (TL3) - Kip-ft Units

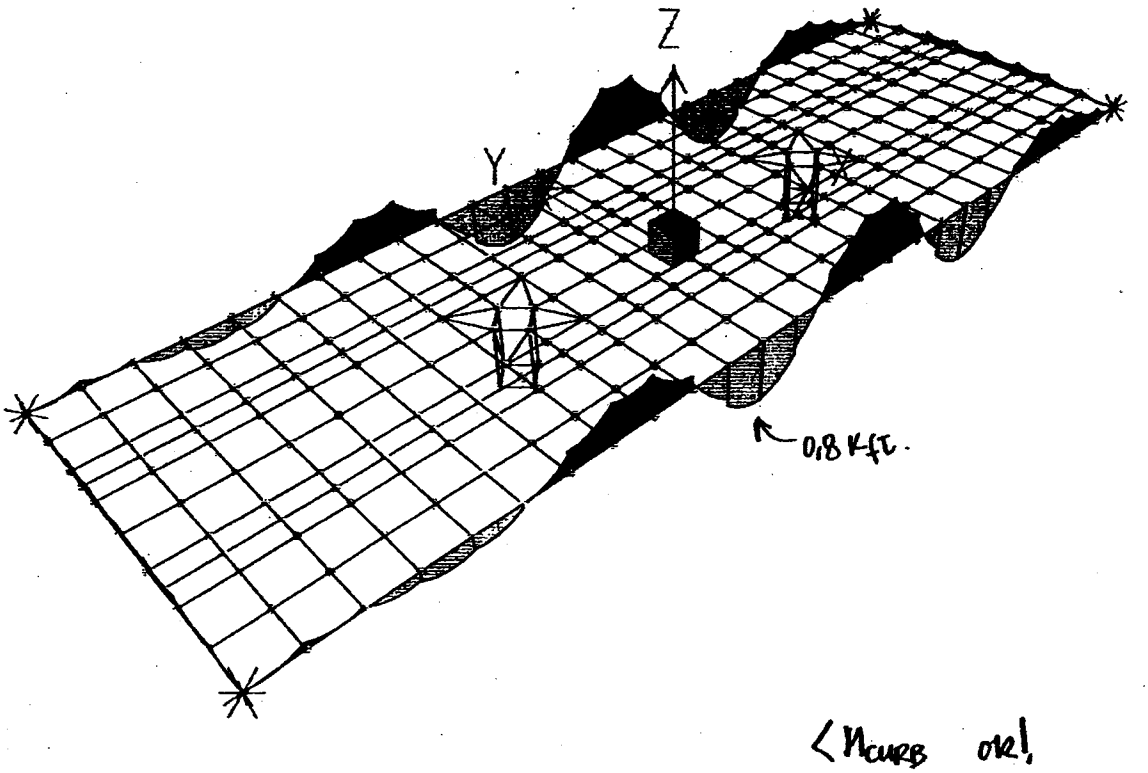

< M_{CURB} ok!

SAP2000 v7.40 - File:ConcPad - Moment 3-3 Diagram (U1) - Kip-ft Units

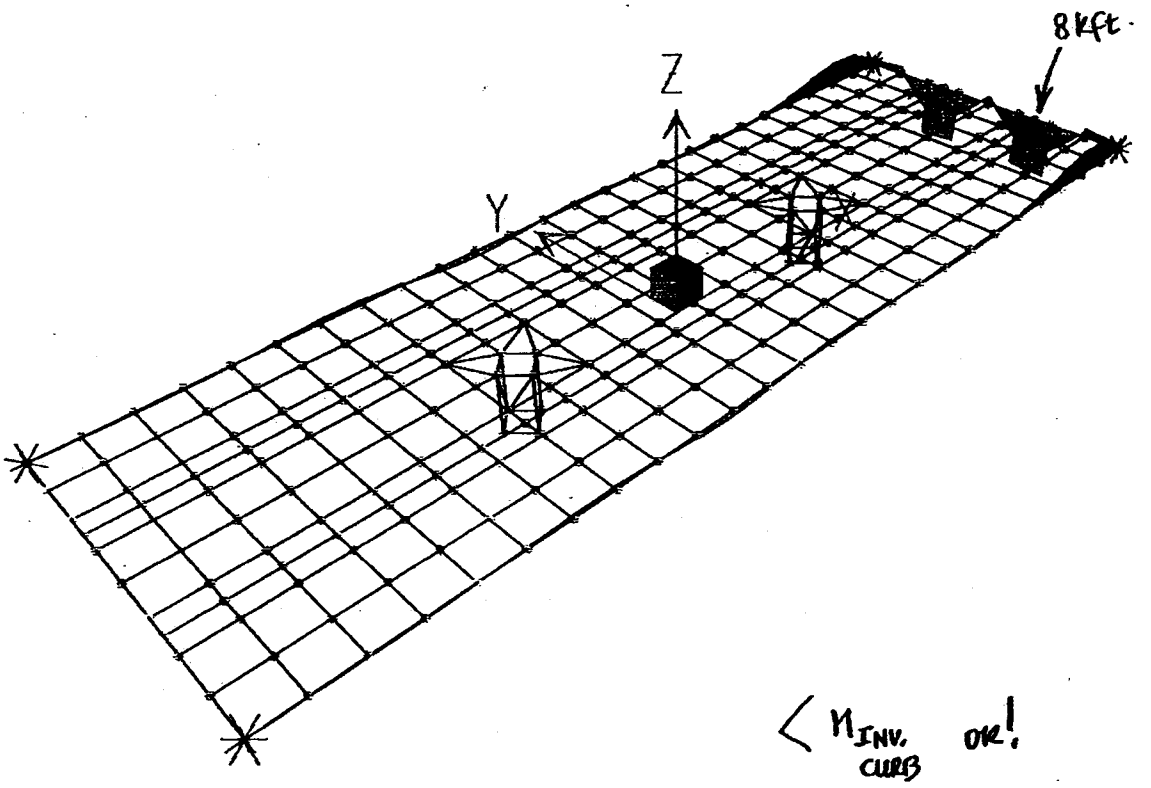

SAP2000 v7.40 - File:ConcPad - Moment 3-3 Diagram (U2) - Kip-ft Units

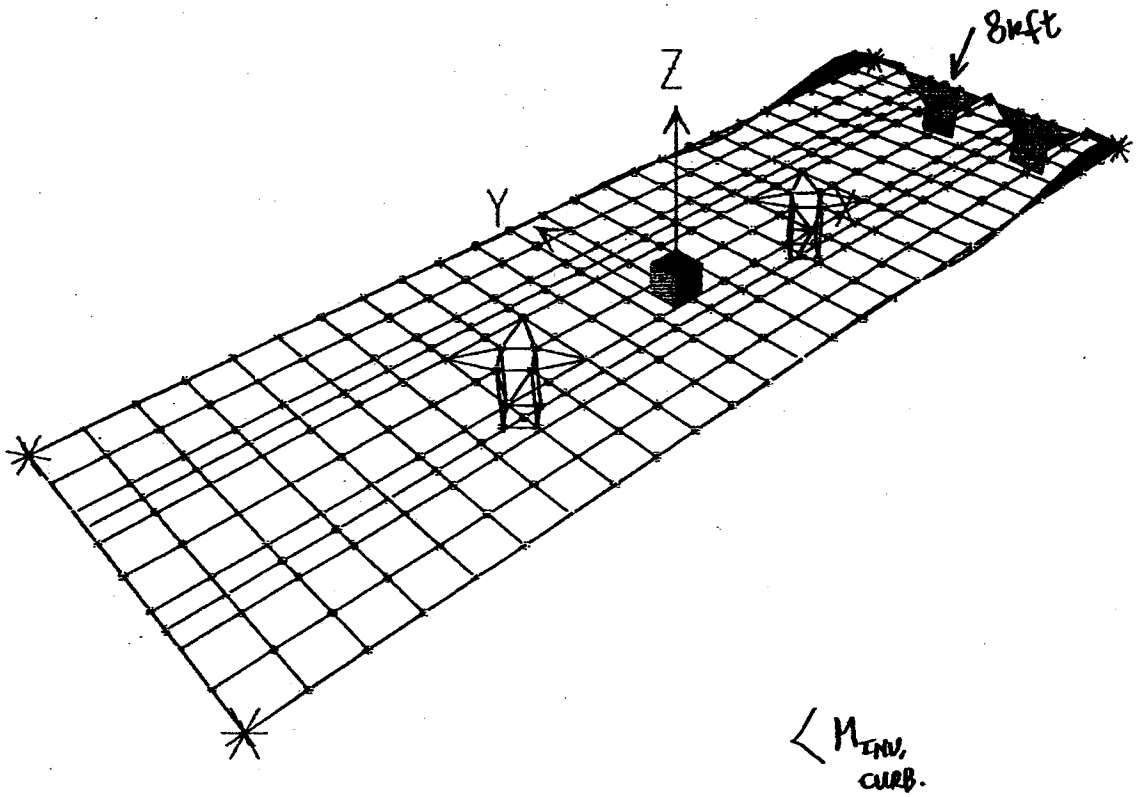

SAP2000 v7.40 - File:ConcPad - Moment 3-3 Diagram (U3) - Kip-ft Units

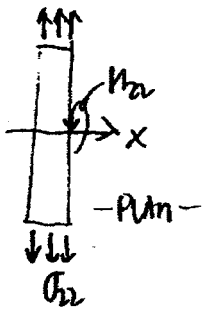

SEE NEXT PAGE!

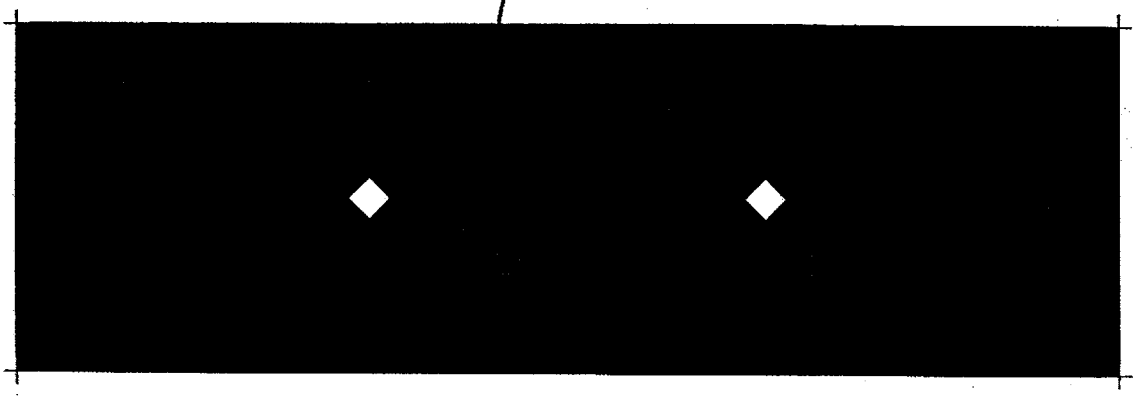

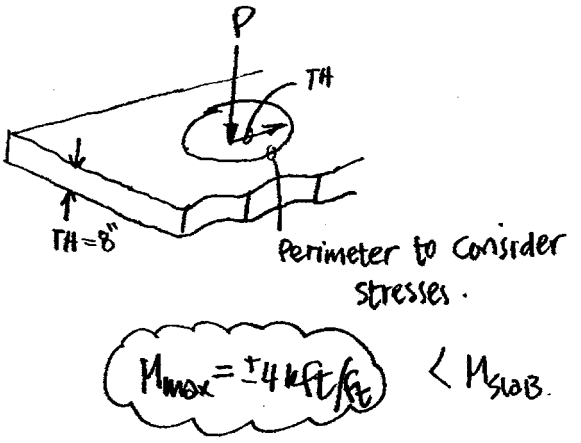

0.00 0.75 1.50 2.25 3.00 3.75 4.50 5.25 6.00

SAP2000 v7.40 - File:ConcPad - Resultant M22 Diagram (U1) - Kip-ft Units

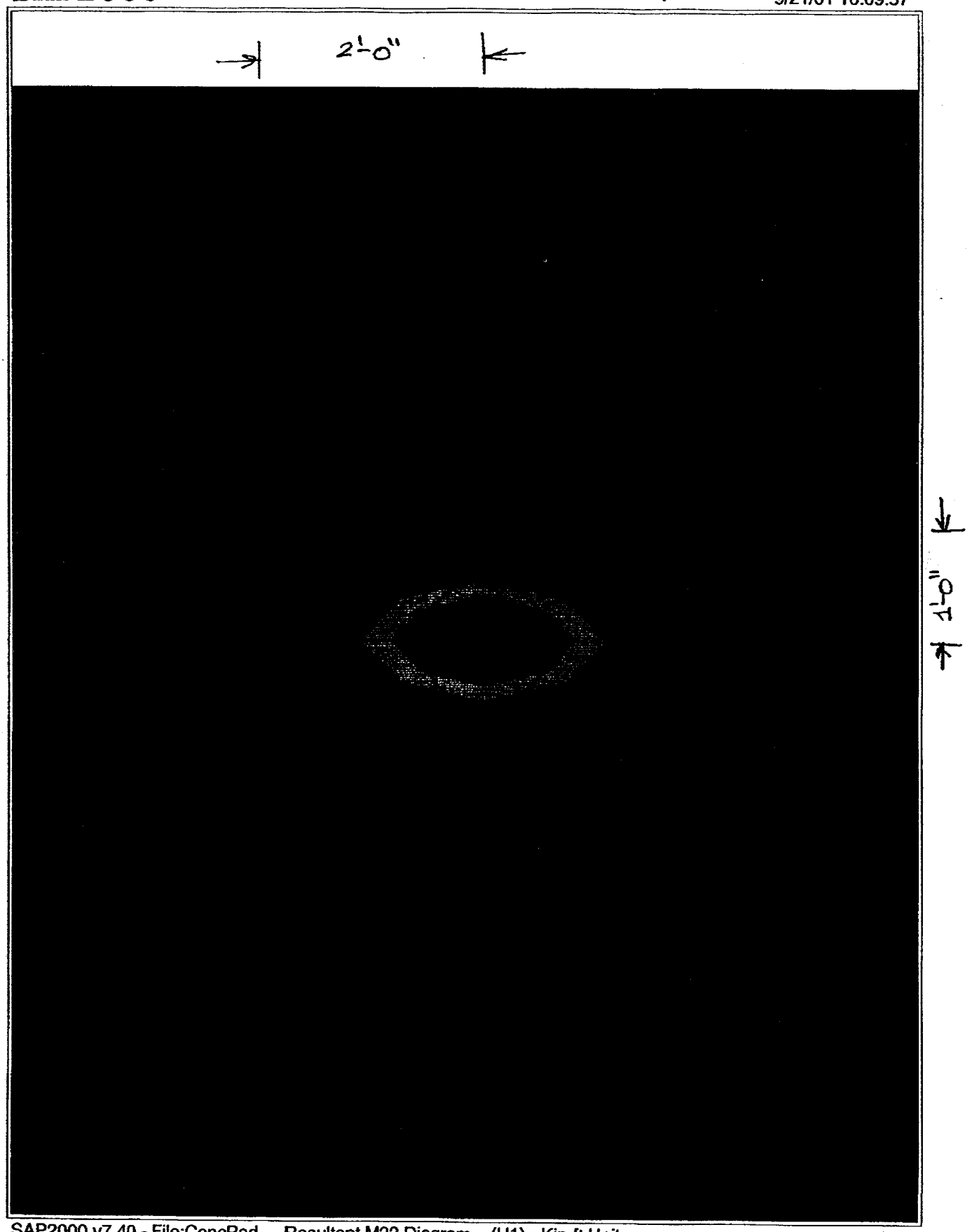

SAP2000 v7.40 - File:ConcPad - Resultant M22 Diagram (U1) - Kip-ft Units

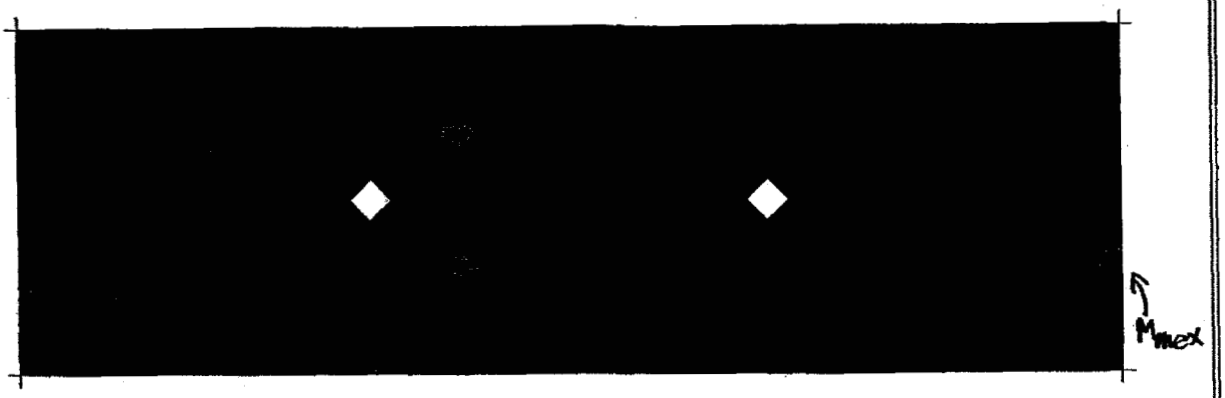

$M_{max} = 5.0$ k-ft/ft $< M_{slab}$

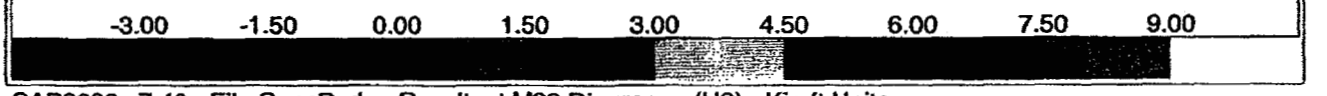

SAP2000 v7.40 - File:ConcPad - Resultant M22 Diagram (U2) - Kip-ft Units

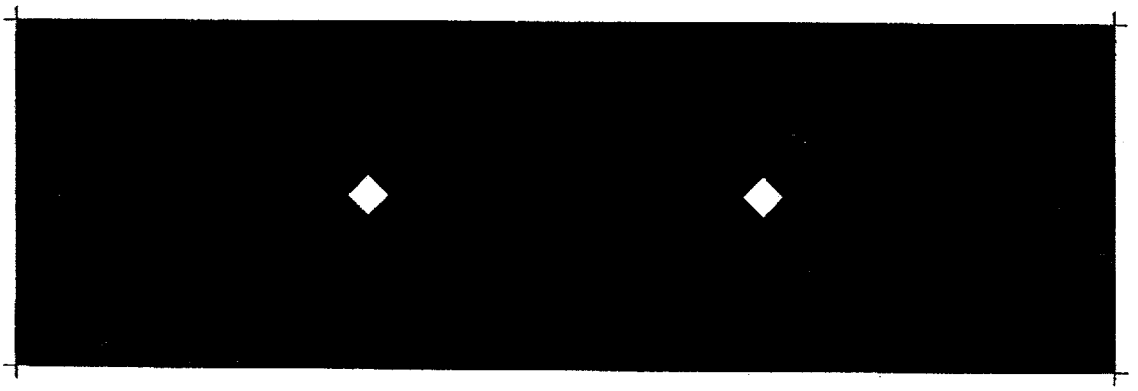

$M_{MAX} = 5.0$ kft/ft $< M_{SLAB}$.

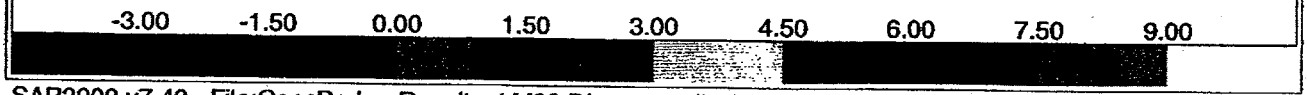

SAP2000 v7.40 - File:ConcPad - Resultant M22 Diagram (U3) - Kip-ft Units

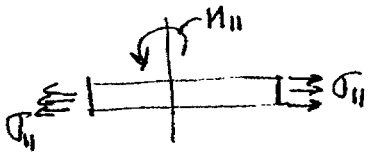

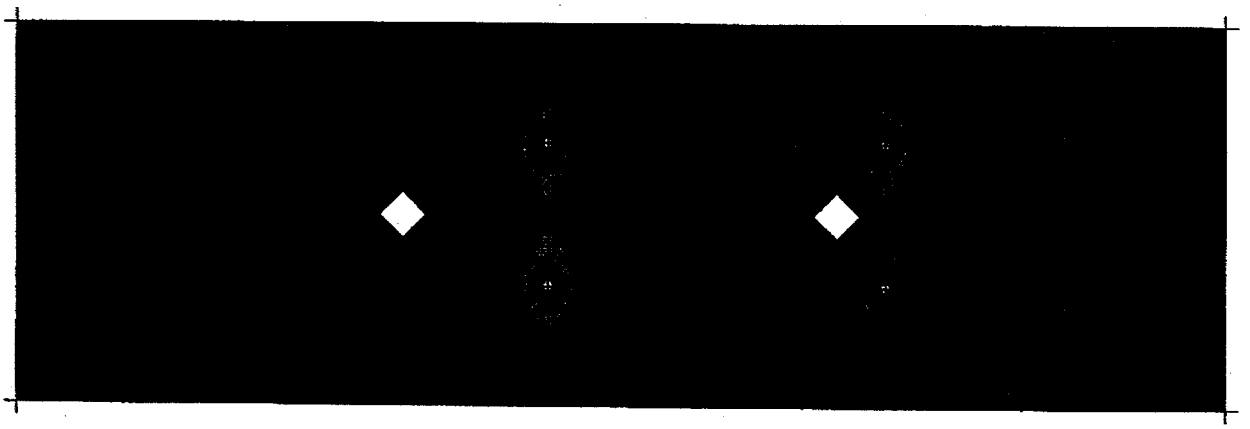

$M_{max} = \pm 4$ kft/ft $< M_{slab}$ ok!

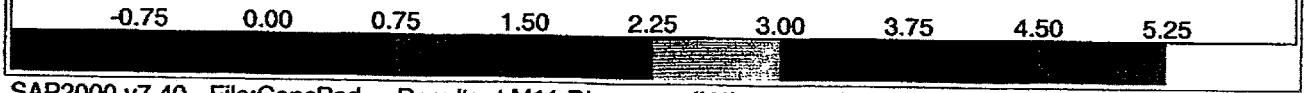

SAP2000 v7.40 - File:ConcPad - Resultant M11 Diagram (U1) - Kip-ft Units

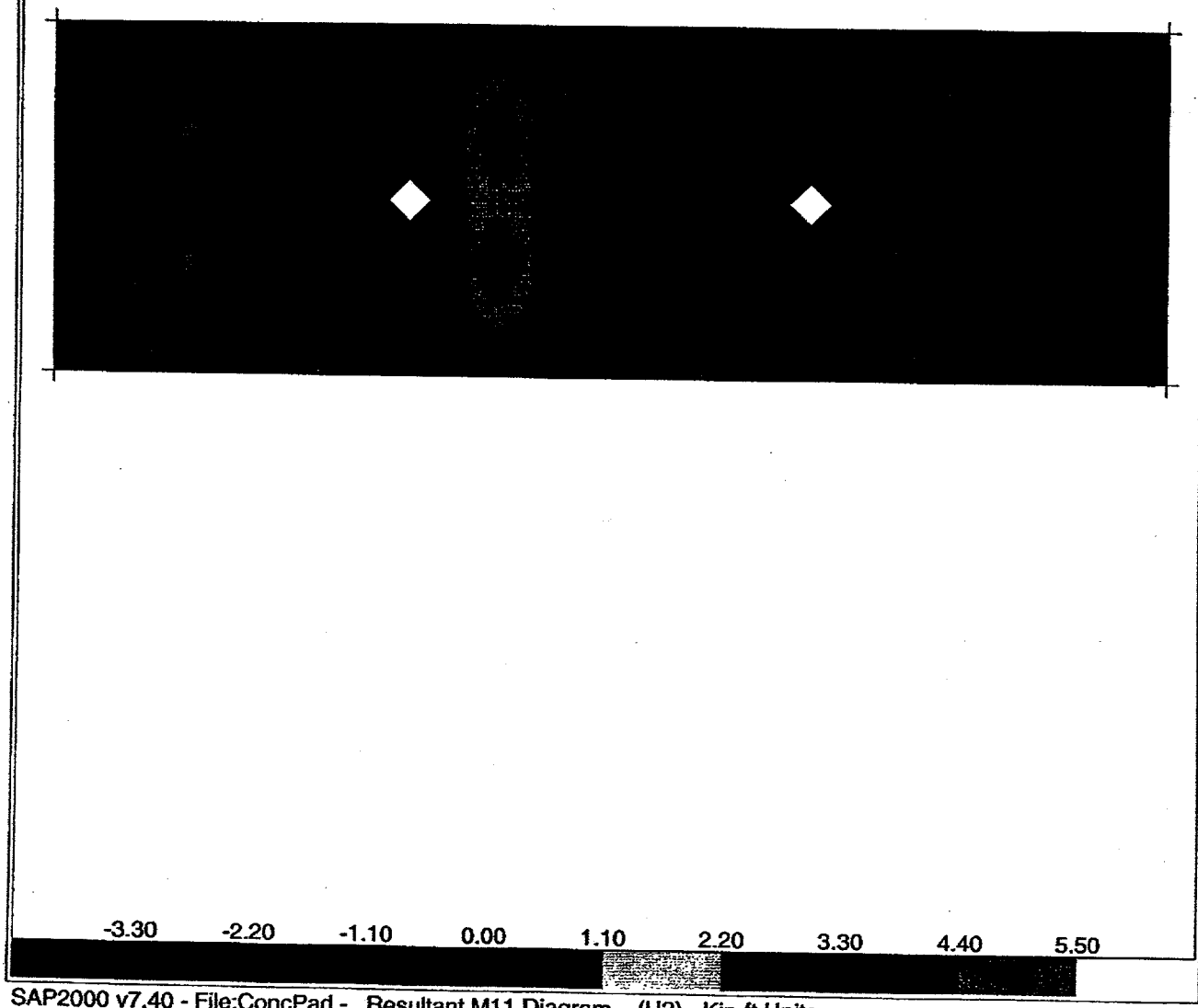

SAP2000 v7.40 - File:ConcPad - Resultant M11 Diagram (U2) - Kip-ft Units

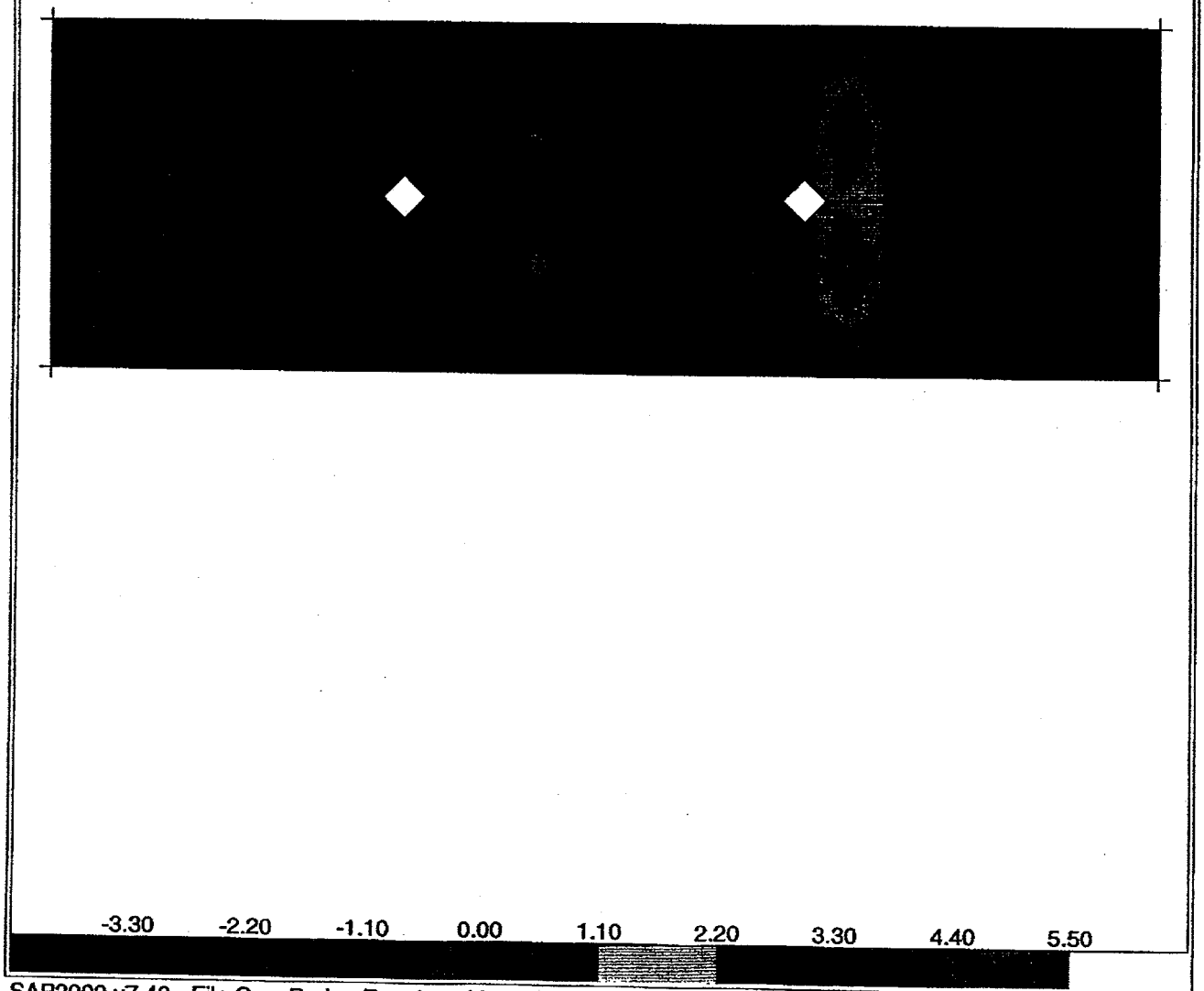

SAP2000 v7.40 - File:ConcPad - Resultant M11 Diagram (U3) - Kip-ft Units

— CREST PAD BUILDINGS —

CREST PAD BUILDING:

GEOMETRY:

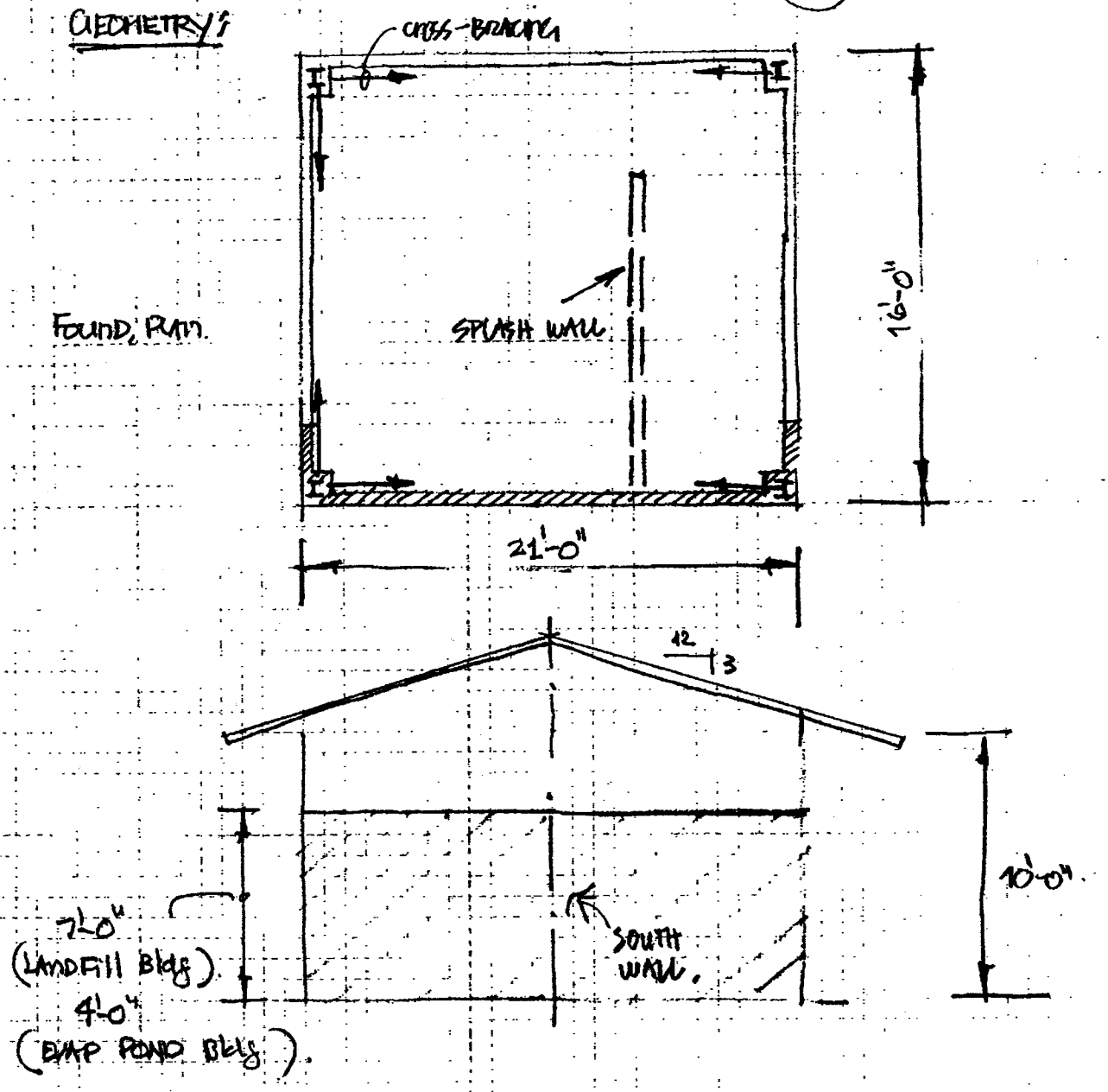

IMPORTANT NOTE:

- FROST DEPTH NOT CONSIDERED!
  BUILDINGS ARE PLACED AT THE TOP OF A LANDFILL W/ GOOD DRAINAGE, NO WATER ACCUMULATION IS EXPECTED.

STAFF MEETING: SHINJI GOTO, MIKE REIMBOLD, SEPT/2001

ROOF:

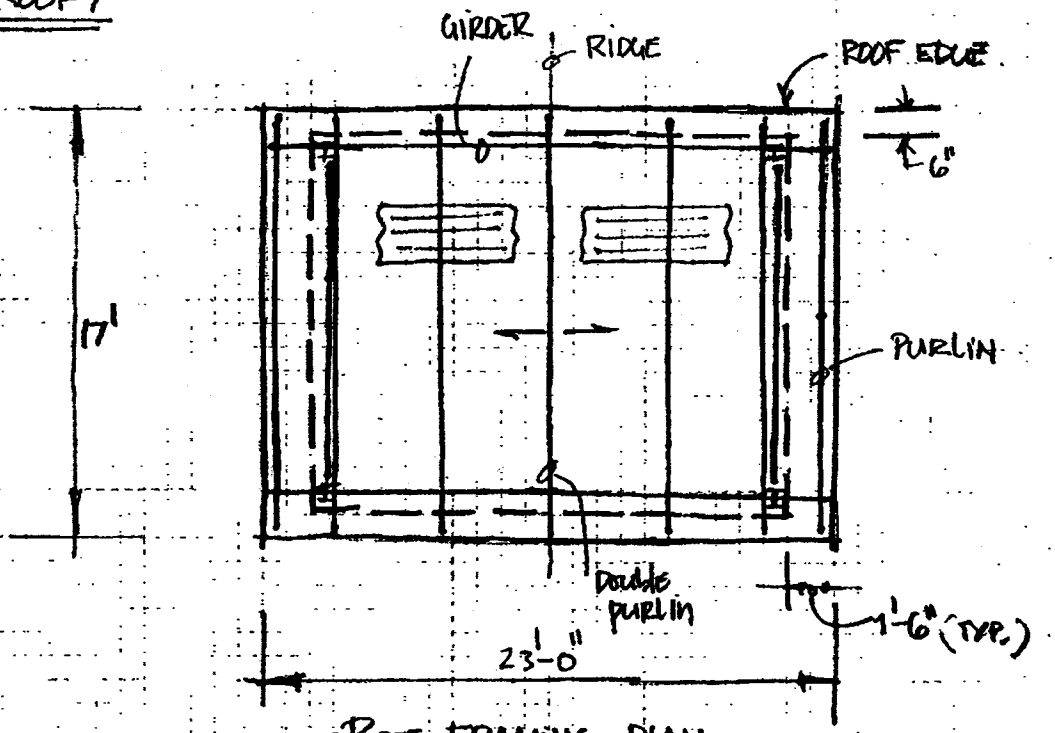

—ROOF FRAMING PLAN—

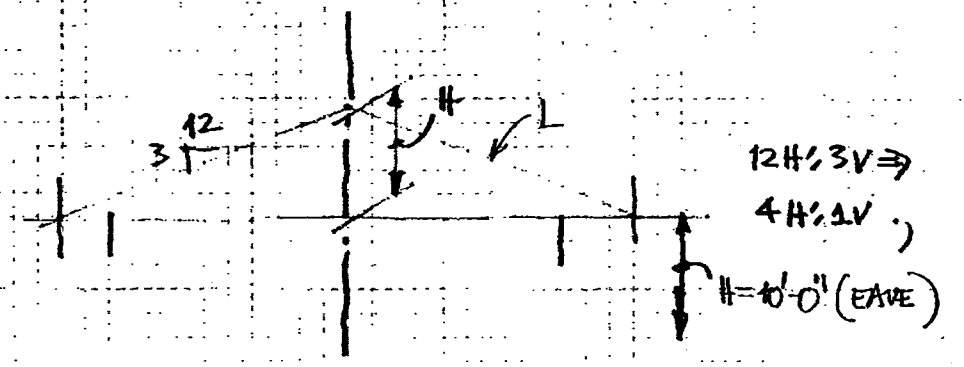

H = 2.875'

L = 11.85'

ROOF SURFACE = 11.85' × 17' × 2 = 403 FT²

1) WEIGHTS:

W_S = 3 PSF — METAL SHEATHING —

W_I = 2 PSF — ROOF INSULATION —

5 PSF

P_{WS} = 5 × 403 = 2015 #

W_P = 25 PLF — PURLINS —

L_P = 17' × 8 = 136' ; P_P = 3400 #

$W_G = 35$ PLF — GIRDER —

$L_G = (21' + 16')2 = 74'$

$P_G = 2590^{\#}$

$P_{ROOF} = 2015 + 3400 + 2590 = 8005^{\#}$

$P_{cd\,ROOF} = 8005/4 = 2001^{\#}$

WALLS:

$W_S = 3$ PSF

$W_I = 2$ PSF

$W_L = 3$ PSF INT. LINER

8 PSF

$W_W = 8\text{ PSF} \times 10' = 80$ PLF

CURBS = 25 PLF

CURBS ASSUMED

$P_{curb} = 25 \times (21' + 16')2 \times 2 = 3700^{\#}$

$P_{cd} = 2001 + \frac{3700}{4} = 2926^{\#}$

2) EQ: UBC'97 Sec. 2-14

Soil type S_D

Zone: 3 → $Z = 0.30$

Structural system: Building Frame System
ORDINARY BRACED STEEL FRAME $R = 5.6$

$C_a = 0.36$

$C_v = 0.54$

$I = 1.25$ (struct. housing or supporting toxic/chemical substances).

$T \simeq C_t (h_n)^{3/4}$

$C_t = 0.020$, $T = 0.11$ sec.

$h = 10'$

$$V_B = \frac{C_v I}{RT} W = \frac{0.54 \times 1.25}{5.6 \times 0.11} W = 1.0 W$$

$V_{min} \leq V_B \leq V_{max}$

$$V_{min} = 0.11 C_a I W = 0.05 W$$

$$V_{max} = \frac{2.5 C_a I}{R} W = \underline{\underline{0.20 W}}$$

$$\boxed{V_B = 0.20 W}$$

DOE-STD-1020-94:

Sec. 2-6

For PC=1 obtain seismic coeff. from building codes, —

$P_{ROOF} = 8005^{\#}$ W_W

$P_{WALL} = 80\,PLF \times (16' + 21')\,2 \times \frac{1}{2} = 2960^{\#} + 3700^{\#} = 6660^{\#}$ GIRTS

$P_{COL} = 35\,PLF \times \frac{10'}{2} \times 4 = 700^{\#}$ (COL. SELF WT)

$P_{TOTAL} = 8005^{\#} + 6660 + 700 = 15365^{\#}$

$V_B = 0.20 \times 15365 = 3073^{\#}$

GIVES FACT. LOADS!

ANALYSIS:

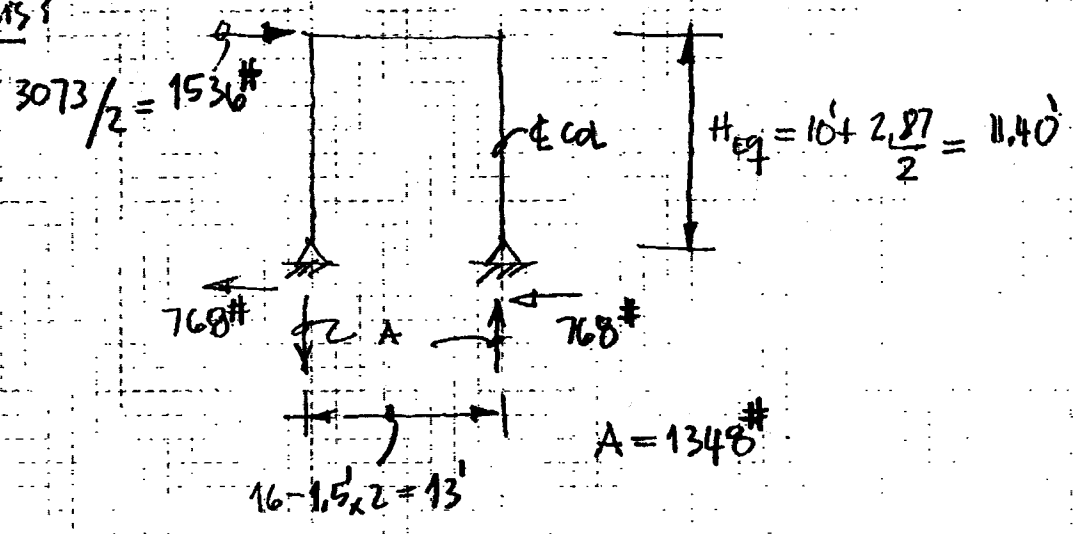

3) WIND LOAD:

For PC=1, USE BUILDING CODE, DOE-STD-1020-94, Pag. 3-5,

UBC'97 Pag. 2-7,

$P = C_e C_q q_s I_w$

$V = 70$ MPH $\rightarrow q_s = 12.6$ PSF

DOE-STD-1020-94 Pag. 3-4

$I_w = 1.15$ (Hazardous Fac.)

EXP. C; has terrain that is flat and generally open, extending 1/2 mile.

0'-15' Adjoining Ground; $C_e = 1.06$

$P = 1.06 \times 12.6 \times 1.15\, C_q = 15.4 C_q$ [PSF]

PRIMARY FRAMES & SYSTEMS; TO CHECK REACTIONS.—

NO PARTIALLY ENCLOSED SIDE; DOOR & WINDOWS SHALL BE WIND RESISTANCE.—

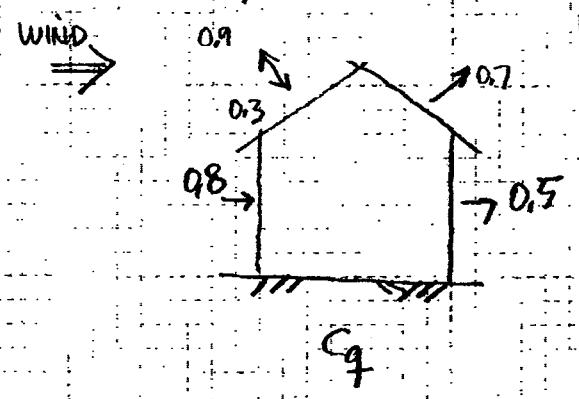

COND. 1

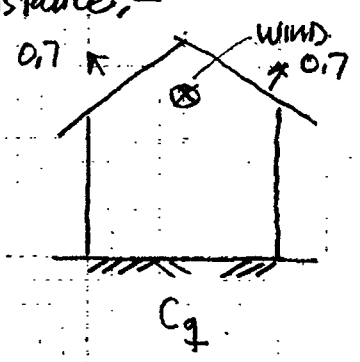

COND. 2

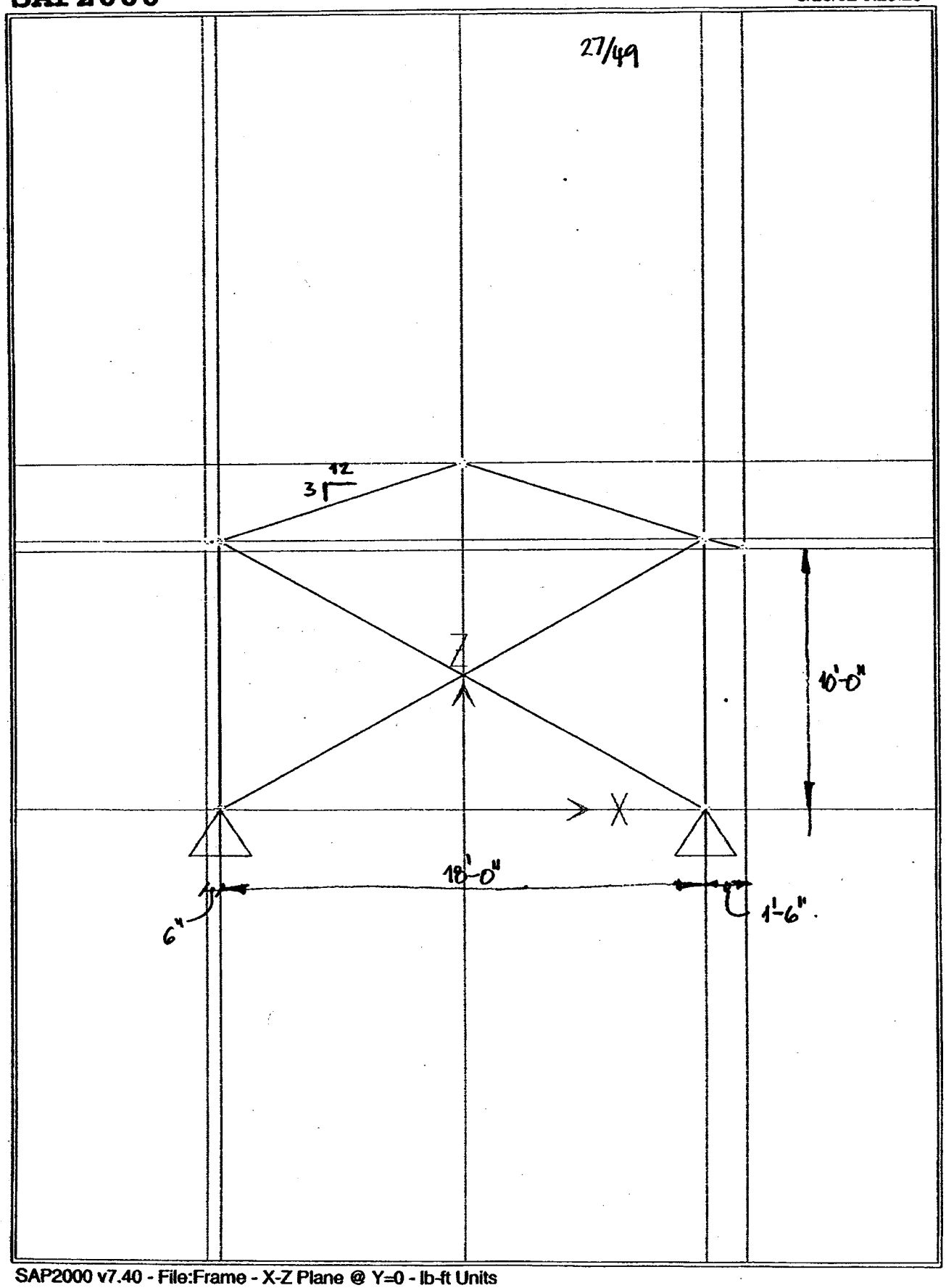

SAP2000 v7.40 - File:Frame - X-Z Plane @ Y=0 - lb-ft Units

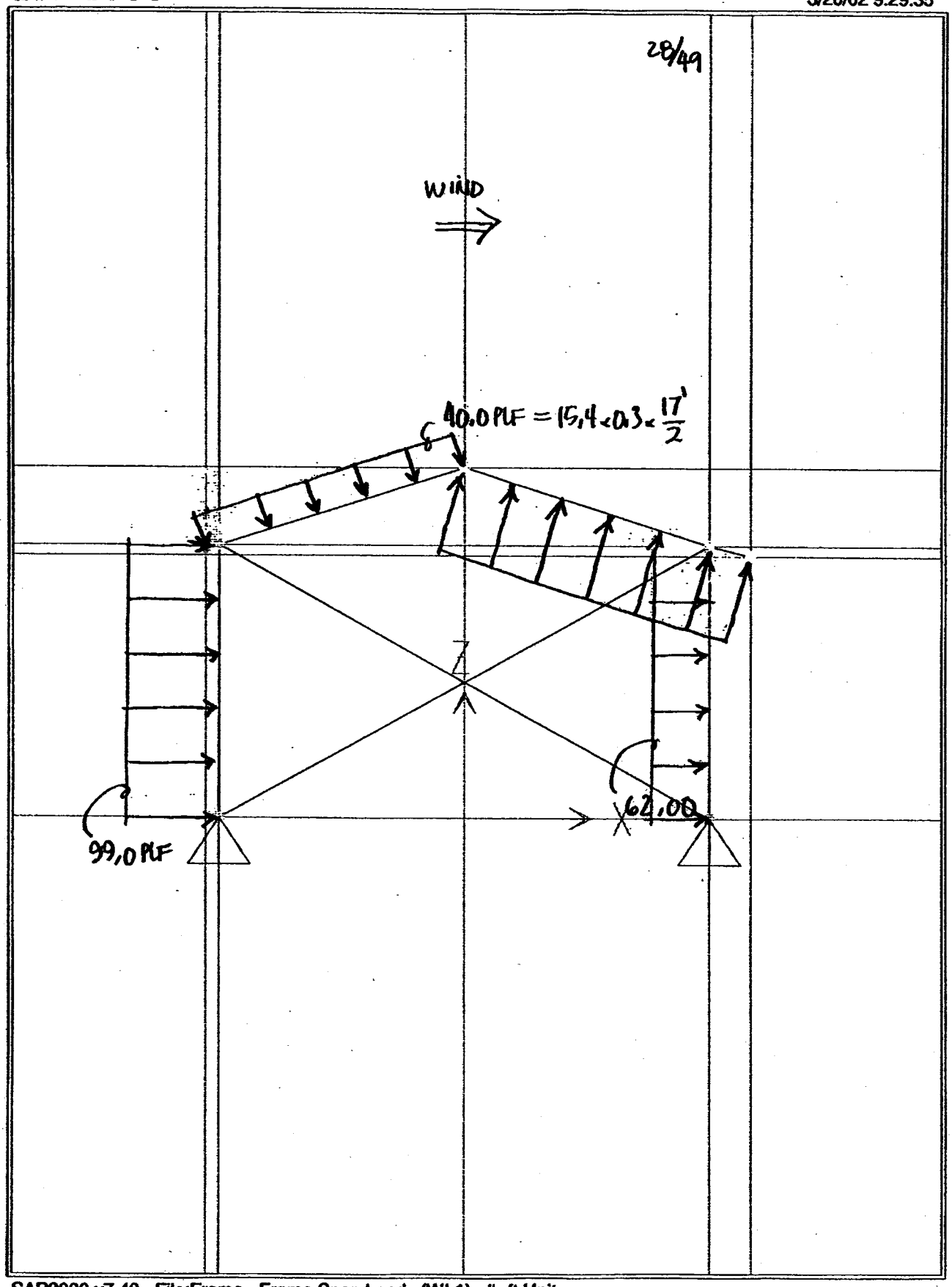

SAP2000 v7.40 - File:Frame - Frame Span Loads (WL1) - lb-ft Units

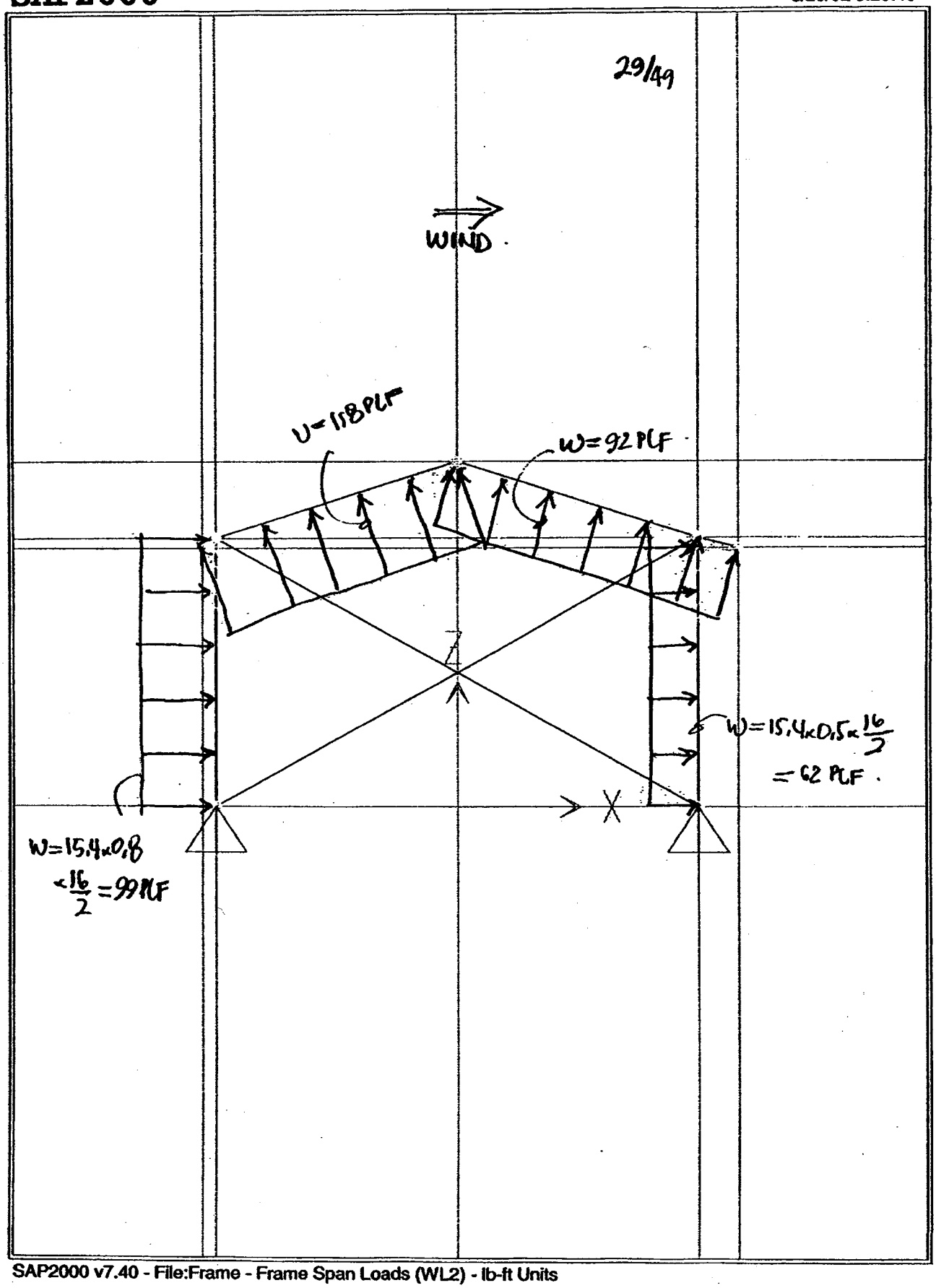

SAP2000 v7.40 - File:Frame - Frame Span Loads (WL2) - lb-ft Units

SAP2000 3/20/02 9:43:06

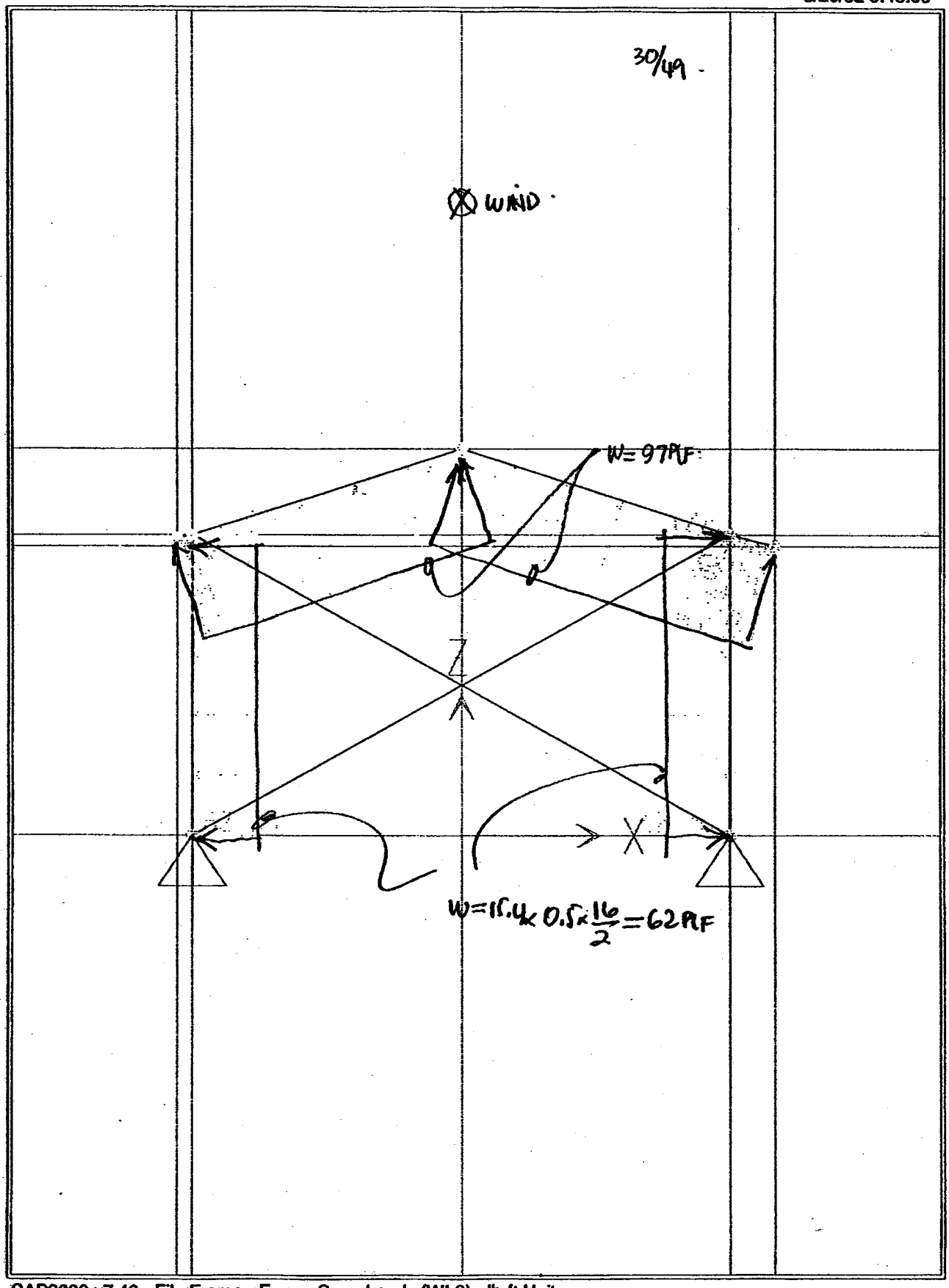

SAP2000 v7.40 - File:Frame - Frame Span Loads (WL3) - lb-ft Units

31/49

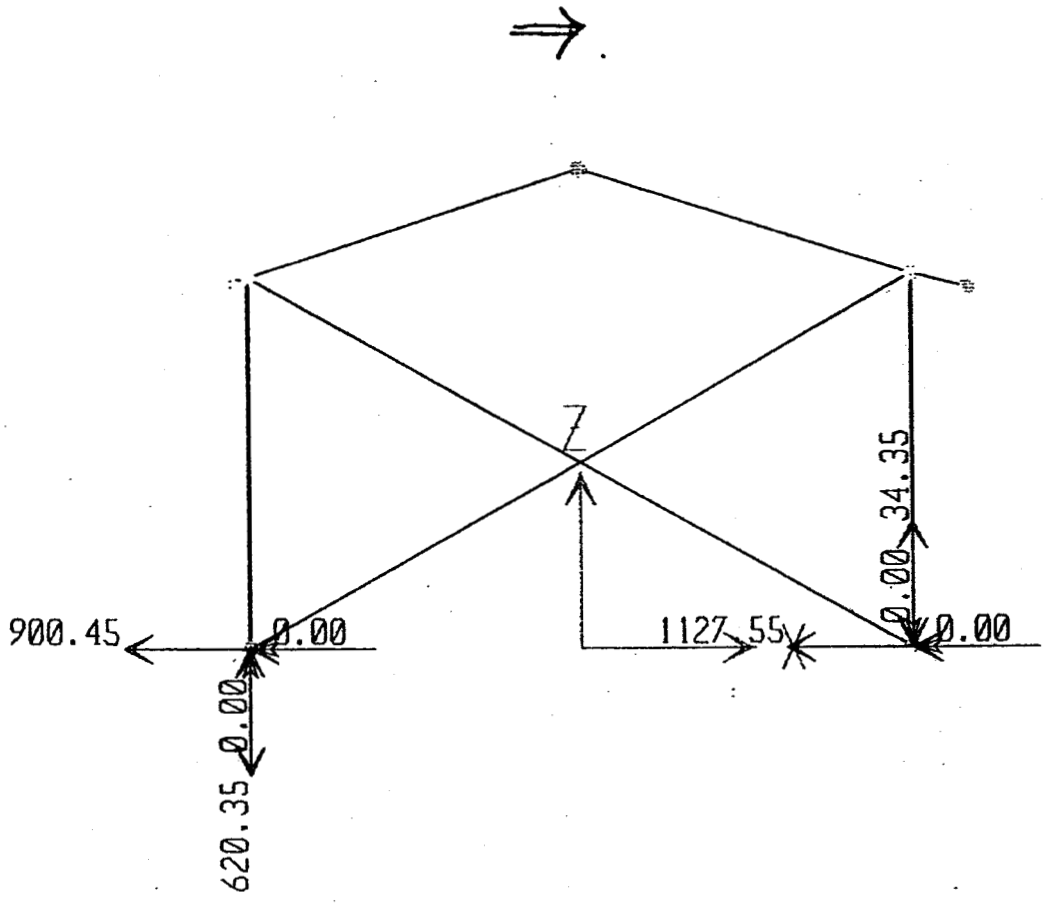

SAP2000 v7.40 - File:Frame - Restraint Reactions (WL1) - lb-ft Units

32/49.

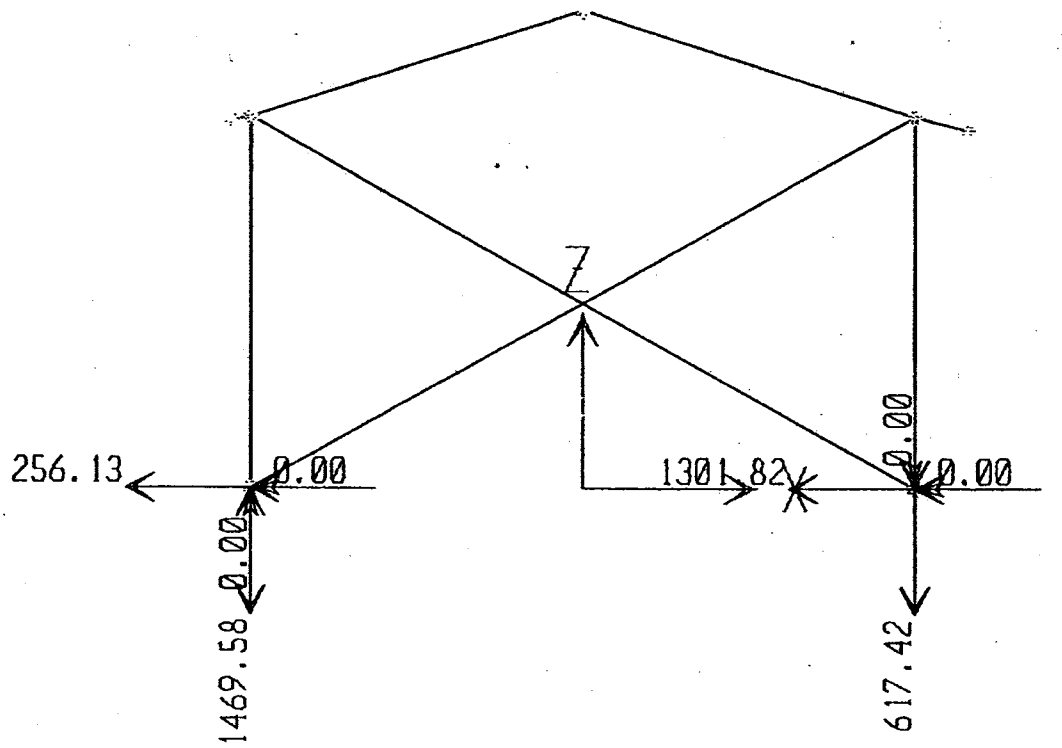

SAP2000 v7.40 - File:Frame - Restraint Reactions (WL2) - lb-ft Units

33/49.

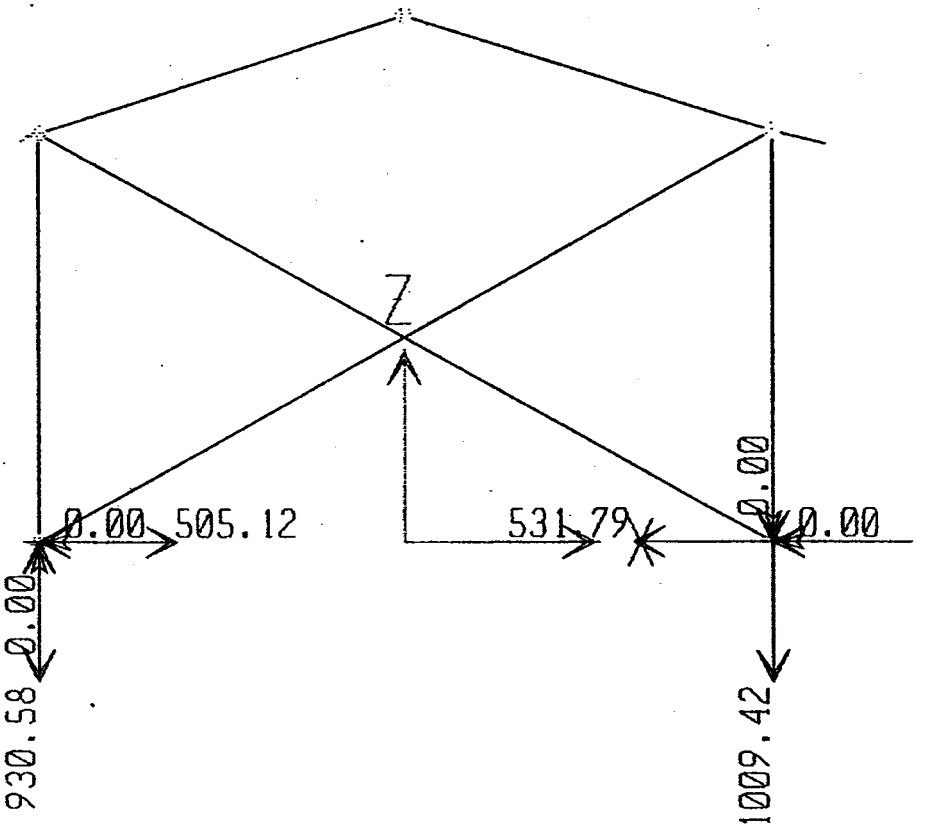

SAP2000 v7.40 - File:Frame - Restraint Reactions (WL3) - lb-ft Units

4) SNOW LOAD:

$W_{SNOW} = 30\ PSF$ ← SHALL BE 30 PSF !!

ROOF PROJECTED AREA.

$P_{SNOW} = 30 \times 391 = 11730^{\#}/4 = 2932^{\#}$ PER col.

5) ROOF LIVE LOAD:

$W_{ROOF\_LIVE} = 20\ PSF$ UBC '97 PAGE 2-27

(FOR 25% OR 3V:12H)

$P^{col}_{LIVE} = 1955^{\#}$

35/49

Upward[+]
Rightward[+]

	Ax [lb]	Ay [lb]	Bx [lb]	By [lb]
DL		2926		2926
EQ	768	-1348	768	1348
WL1	-901	-621	-1128	35
WL2	-256	-1470	-1302	-617
WL3	505	-931	-532	-1010
SL		2932		2932
LL		1955		1955

Combinations: Envelope

	Ax [lb]	Ay [lb]	Bx [lb]	By [lb]
S1	0	7813	0	7813
S2	901	4396	1302	3936
S3	549	3596	549	3596
S4	676	5495	977	5150
U1	0	4096	0	4096
U2	0	8105	0	8105
U3	768	2163	768	4859
U4	1171	4103	1466	3981

$\leq 1,33 F_{311}$

CH2MHILL SUBJECT ICDF INEEL BY SD SHEET NO. 36 of 49 DATE Sept 09/01 PROJECT NO.

Download:
$P = 7813^{\#}$

MAX UPLIFT,
$P = 1470^{\#}$ (only wind, conservative).

FTG 1

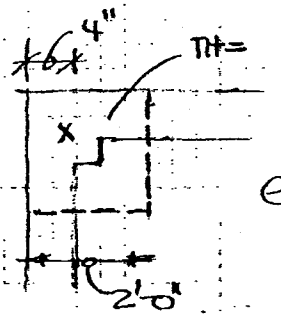

$e = 12 - 4 = 8"$

$P = 7813\# < 1.33 F_{all}$

$= 5495\# < F_{all}$

$F_{all} = 8000$ PSF

$\sigma_B = \frac{7813}{4} = 1953$ PSF $<< 8000$ PSF $\times 1.33$

$\sigma_B = \frac{5495}{4} = 1374$ PSF < 8000 PSF.

UPLIFT CHECK:

$P = 1470\#$

$P_{FTG} = (1.5' \times 2^2 + 1)150 = 1050\#$

DL From MTL BLDG $= 50\% \cdot 2850 = 1425\#$

$2475\# > 1470\#$ ok!

FS = 1.68

For 100% DL

$FS = \frac{3900}{1470} = 2.7$ ok!

FTG CAPACITY:

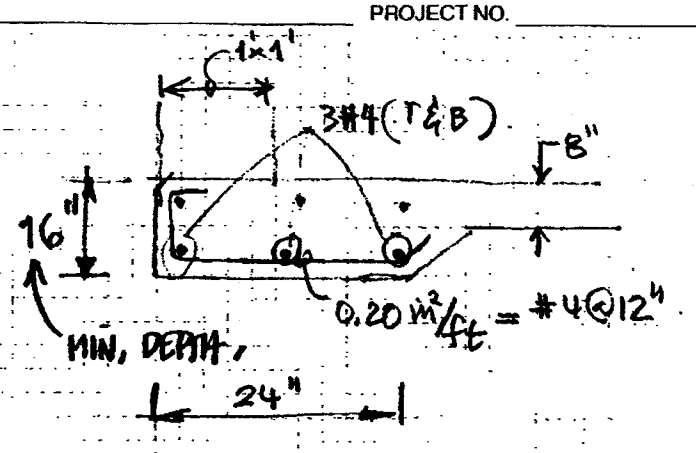

$d = 12.5''$

$A_s = 0.20 in^2/ft$

$a = 0.29 in/ft$; $\phi M_n = 11.2 k'/'$

$\phi V_n = \phi V_c$

Punching Shear:

$b_o = (12'' + 4'') \cdot 2 = 32''$

$\phi V_c = 4\sqrt{f'_c}\, b_o d = 32.0^k \cdot 0.85 = 28^k$

4

Long. CAPACITY:

3#4 $A_s = 0.60 in^2$

$b = 12''$; $d = 16'' - 3.5 - 12.5''$; $\phi M_n = 11.2 k'/'$

FOR $b = 24''$; $\phi M_n = 22.4 k'$ (FTG)

$\phi V_n = \phi\, 0.002\sqrt{4000}\, 24'' \cdot 12.5 = 32^k$

.85

SUMP DESIGN:

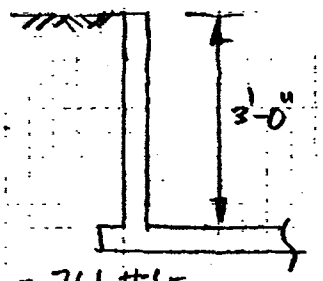

$\gamma = 130$ PCF (COMPACTED SOIL)

$V = \frac{1}{2}\gamma h^2 = \frac{1}{2} \times 130 \times 3^2$

$= 585$ PLF $\times 1.3 = 761$ #/LF

$M = 585 \times \frac{1}{3} 3 = 585$ #'/' $\times 1.3 = 761$ #'/'

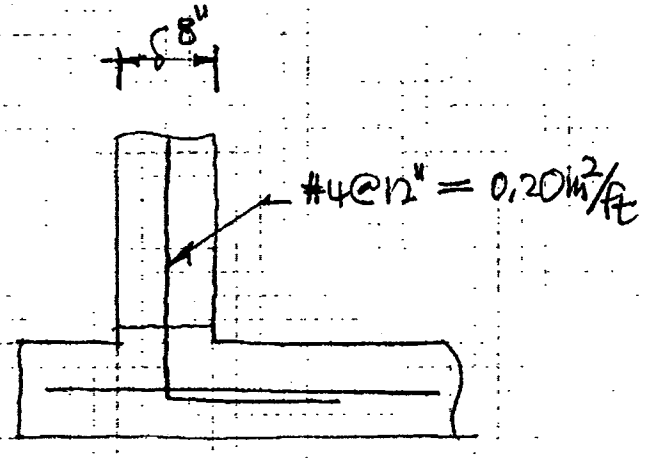

ULTIMATE DESIGN:

$a = \frac{A_s f_y}{0.85 f'_c d} = \frac{0.20 \times 60}{.85 \times 4 \times 4''} = 0.88$ in

$\phi M_n = \phi A_s f_y \left(d - \frac{a}{2}\right) / 12 = 3.20$ k ft/ft > 761 #'/' ok!

$\phi V_n = \phi 2 \sqrt{f'_c}\, bd = \phi 2 \sqrt{4000} \times 12 \times 4 = 5.2$ k/ft > 761 PLF ok!

SLAB ON GRADE, ADD'L LOADS,
EQUIPMENT LOAD: SDL

1) SUMP: 3'x3'x3'
Full of WATER.

2) PIPES AND VALVES, MANIFOLD:
700# + UNISTRUT (support Frame).

700#/16' = 45 PLF

→ For MTL BUILDING MFR,
ADD'L LATERAL load (GIRTS DESIGN)
V = 0.20 x 45 PLF = 10 PLF

For LATERAL STABILITY of
Incorrect: FRAME support.
SHALL BE USED
UBC 1632, AND A special will be ADDED
ON SPECS.

3) CONCRETE PAD:
TH = 3½"

W_p = 150 x 3.5/12 = 44 PSF

LIVE LOAD:
It will BE USE W_u = 100 PSF

Summary:
SDL = 50 PSF
W_u = 100 PSF
All SLAB SURFACE.
W = 10 PLF LATERALLY on GIRTS (For MLT MFR)

PIPING / VALVE MANIFOLD

~10 LF PIPE along wall (1) 3" 0.5CF = 4 gal
(3) 2" 0.7CF = 5 gal

10 gallons water in piping
x 8.34 lbs/gal
41 LBs

VALVES, etc
~50 LBs/ea max VARV, FLOWMETERS x 9 = 450
~30 LBs ea max valves x 7 = 210
660
700 LBS TOTAL

→ APPROX 700 LBS SUPPORTED ON UNISTRUT FRAME ALONG BLDG WALL

HIGH FLOW PUMP ~150 LBS MAX
PLUS HOSE 1.5 LBS/FT x 130 LF = ~200 LBS

→ 350 LBS EXTRACTED PUMP + HOSE

SLAB ON GRADE DESIGN:

TH = 8" ; $W_{DL} = 150 \times \frac{8}{12} = 100$ PSF

$W_{SDL} = 50$ PSF

$W_{LL} = 100$ PSF.

$W_T = 250$ PSF

$q_{all} = 10$ KSF $\gg 250$ PSF

ok!

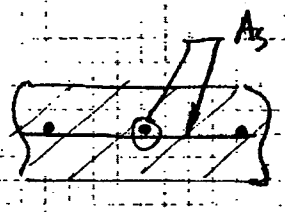

$A_{s\,min} = 0.002bd = .02 \times 12 \times 4 =$

↑ ACI 318-99
7,12,2,1

MIN. Reinf.

$a = .88$ in

$\phi M_n = 3.20$ kft/ft.

— SEE FE MODEL, —

— SOUTH WALL —

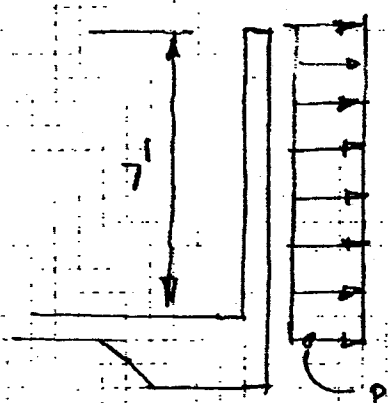

$P = 15.4\,C_q = 15.4 \times 0.5$
$= 8\,PSF.$

or

$P_{out} = 15.4 \times 0.8 = 13\,PSF.$

$V_{max} = 13 \times 7 = 91\,PLF < \phi V_n = 5.2\,KLF$ ok!

$M_{max} = 91 \times 3.5' = 319\,lb\,ft/ft << \phi M_n = 3.20\,K\,ft/ft$ ok!

Axial Load:

HT, MIL, BUILDING SUPP. BY SOUTH WALL

$W_{MIL\,WALL} = 8\,PSF \times 4' = 32\,PLF.$

$\phi P_{n(max)} = 0.8\phi\left(0.85 f'_c\left(A_g - A_{st}\right) + A_{st} f_y\right)$

$= .80 \times 0.70\left(.85 \times 4\left(8 \times 12 - 0.20\right) + 0.2 \times 60\right)$

$= 189\,K/ft >> 32\,PLF$ ok! [ACI 318-99]

$32/189000 \times 100 = 0.016\%$ NO M-P INTERACT.

SEISMIC CHECK:

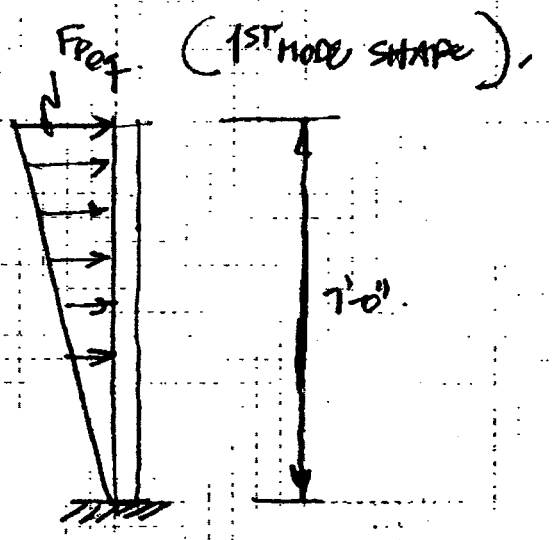

$C_a = 0.36$

$I_p = 1.25$

$F_{P_{max}} = 4 \times C_a I_p W_p = 1.8 W_p$

$F_{P_{min}} = 0.7 C_a I_p W_p = 0.315 W_p$

$R_p = 3.0$

$a_p = 2.5$ THIS IS FOR UNBRACED CANT. PARAPETS (APPLIES FOR THE SPLASH WALL).

$$F_p = \frac{a_p C_a I_p}{R_p}\left(1 + 3\frac{h_x}{h_r}\right) W_p$$

h_x = Element Attachment elevation = 0'

$$F_p = \frac{a_p C_a I_p}{R_p} W_p = 0.375 W_p$$

$F_p = .375 W_p$

$W_p = 150\ PCF \times \frac{6}{12} = 75\ PLF/FT = 75\ PSF$

$F_p = .375 \times 75 = 28.12\ PSF$

$F_{P_{eq}} = 28.12 \times 2 = 56.25\ PSF$ or $56.25\ PLF/FT$

$M_{BASE} = 56.25 \times \frac{7}{2} \times \frac{2}{3} 7 = 919\ PFT/FT = 919\#$ (THIS IS A FACTORED LOAD!)

$\phi M_n = 3.2\ kft/ft$ ok!

South Wall & Splash walls are ok!

Conc. Pier:

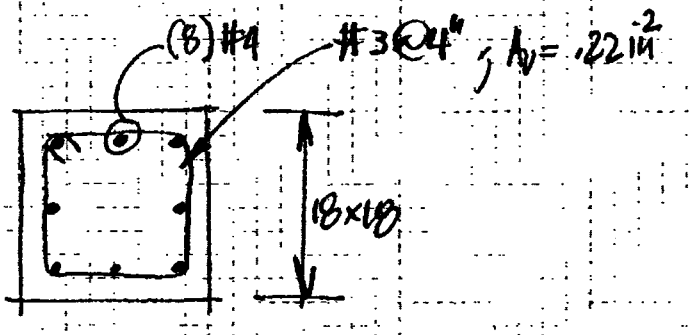

$A_s^{min} = .01 \times A_g = 3.24 in^2$

$(8)\#4 = 1.6 in^2$

It'll be designed as plain concrete;
ACI 318-99 Chapt. 22.)

$P_n = .66 f'_c \left[1 - \left(\frac{l_c}{32h}\right)^2\right] A_g$

$l_c = 7'-0"$ (South wall)

$h = 18"$

$P_n = .6 \times 4 \left[1 - \left(\frac{7}{32 \times 1.5}\right)^2\right] 324 = 761^k$; $\phi P_n = 532^k$ >> Download (4^k working)

↖ .70 conserv.

$\phi T_n = 1.6 \times 60 \times 0.9 = 86^k$ >> UPLIFT (4^k working)

↖ see in Reactions Summary, Pag. 35

Shear:

$V_c = 2\sqrt{4000}\, 18 \times (18 - \underbrace{1.5 - 0.375}_{15.875} - 0.25) = 36^k$

$V_s = \frac{A_v f_y d}{s} = \frac{0.22 \times 60 \times 15.87}{4} = 52^k$

$\phi V_n = .85 (V_c + V_s) = 75^k$

TO AVOID SHEAR FAILURE;

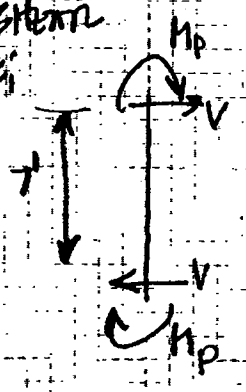

CHAPTER 21
ACI

$M_p \cong 1.25 \phi M_n$

ϕM_n:

$a = \frac{1.6 \times 60}{.85 \times 4 \times 18} = 1.57 \text{ in}$, $\phi M_n = 108 \text{ k}'$

P is min, $\rightarrow \phi M_n = 108 \text{ k}'$

$V_u = 2 \times 108 / 7 = 31^k < 75^k$,

$$S_{max} = \begin{cases} \frac{1}{4} 18 = 4.5'' \\ 6 \times .5'' = 3'' \leftarrow \\ 4'' \end{cases}$$

ACI 318; 21.4.4.2

— FE MODEL —

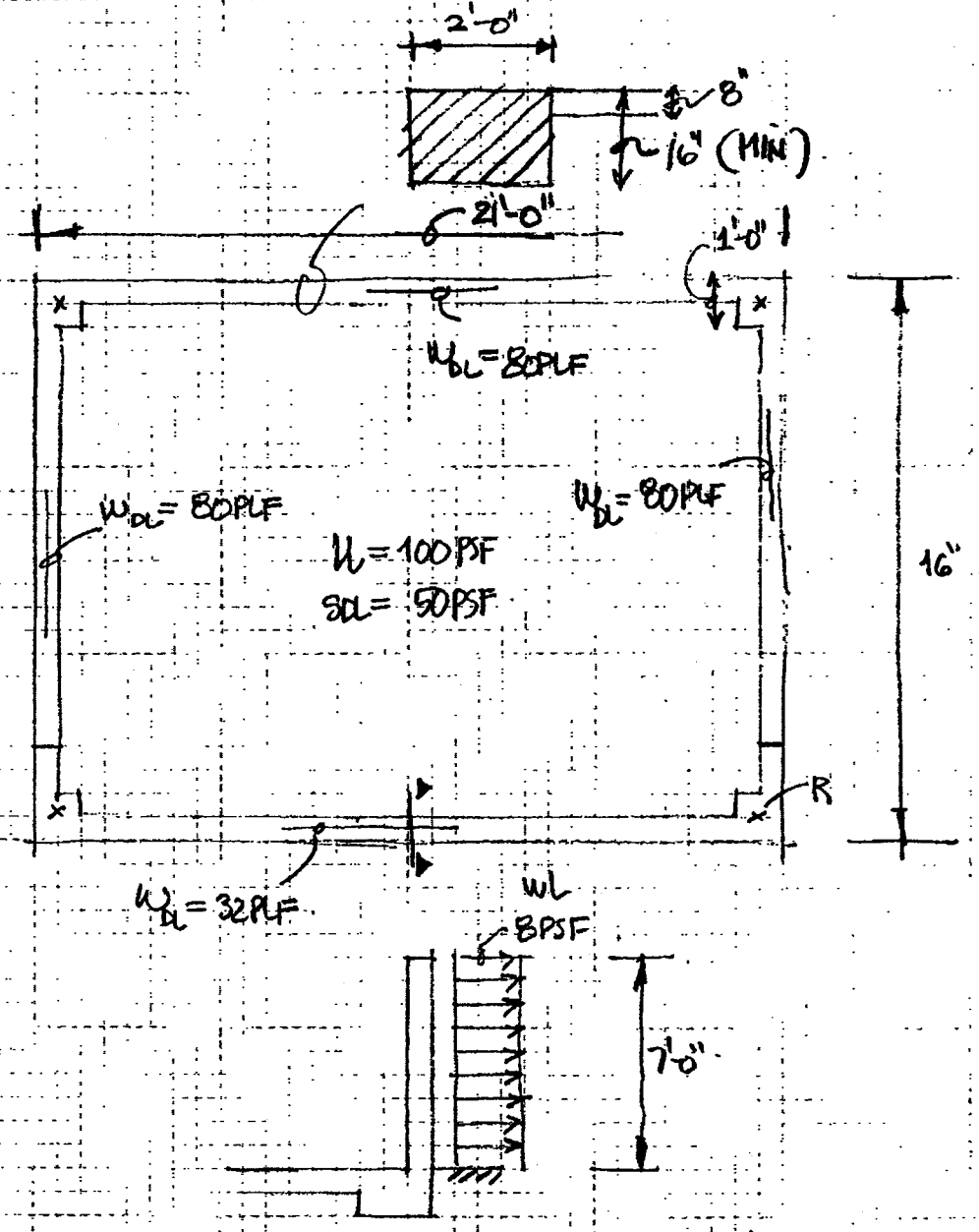

R —
- DL = 2926# ↓
- SL = 2932# ↓
- w_L = 1470 ↑
- L = 1955 ↓

K_s = 600KCF

CONTACT AREA;

A = 1 FT²

k_s = 600 k/ft

45/49

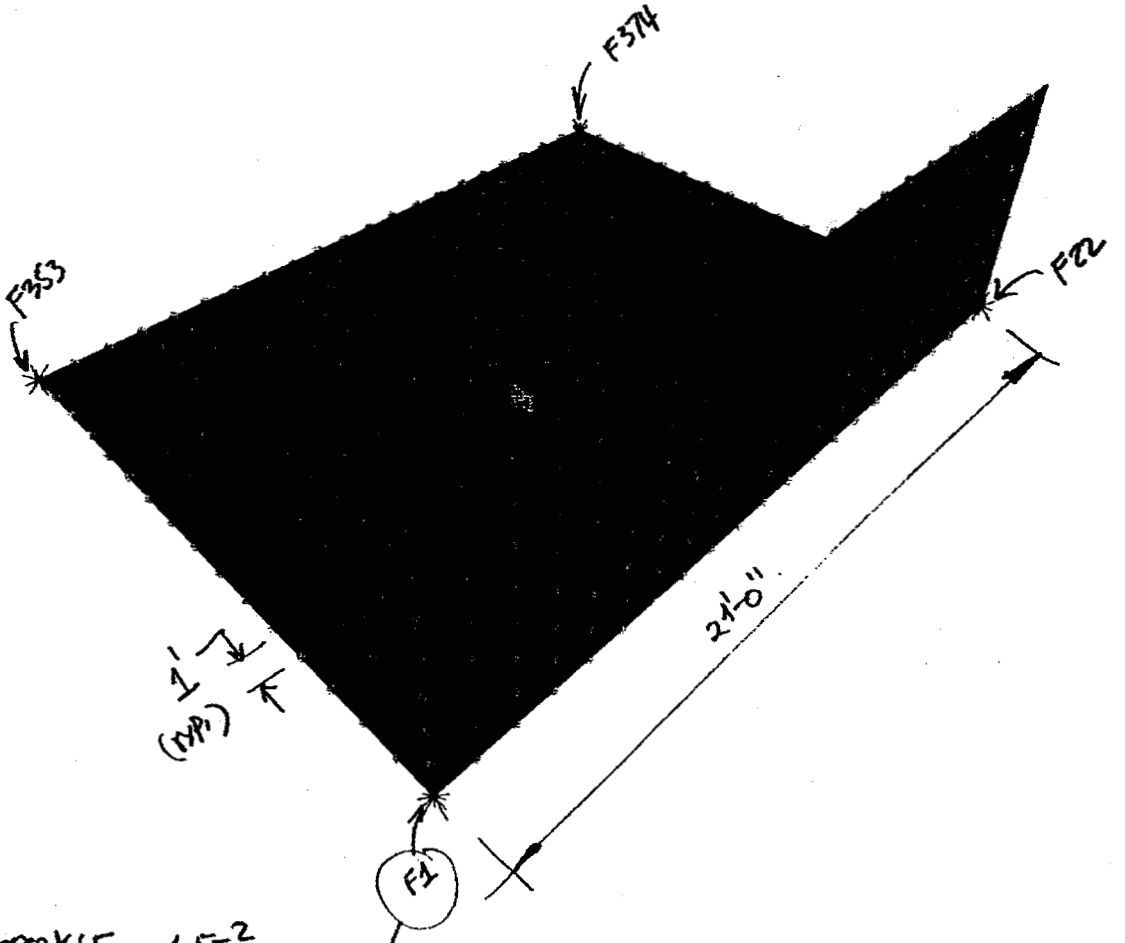

$K_s = 600$ KLF 1 FT^2 Contact Area NODE NAME.

$K_s = 300$ KLF 1/2 FT^2

$K_s = 150$ KLF 1/4 FT^2.

SAP2000 v7.40 - File:CrestPadBldg - 3-D View - Kip-ft Units

46/49

For U2:
$M_{max} = 13k'$

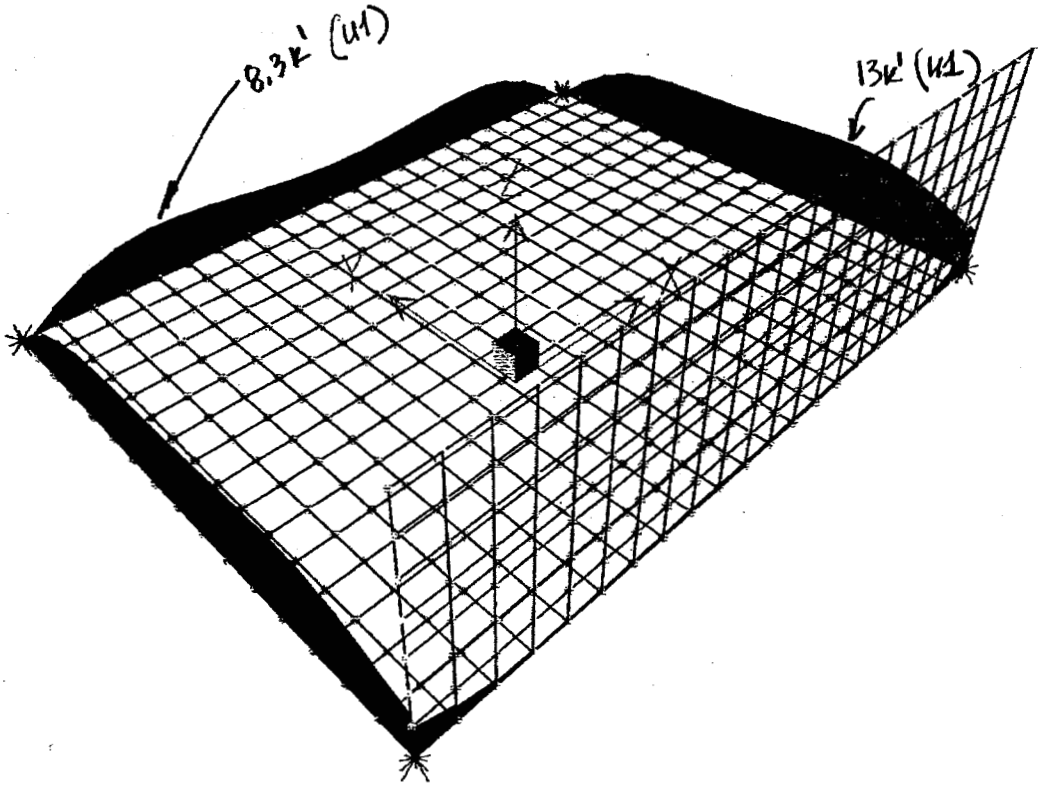

$\phi M_n = 22.4k'$ ok! (FOR h=16")
$\phi M_n = 55k'$ (FOR h=24")

SAP2000 v7.40 - File:CrestPadBldg - Moment 3-3 Diagram (U1) - Kip-ft Units

47/49

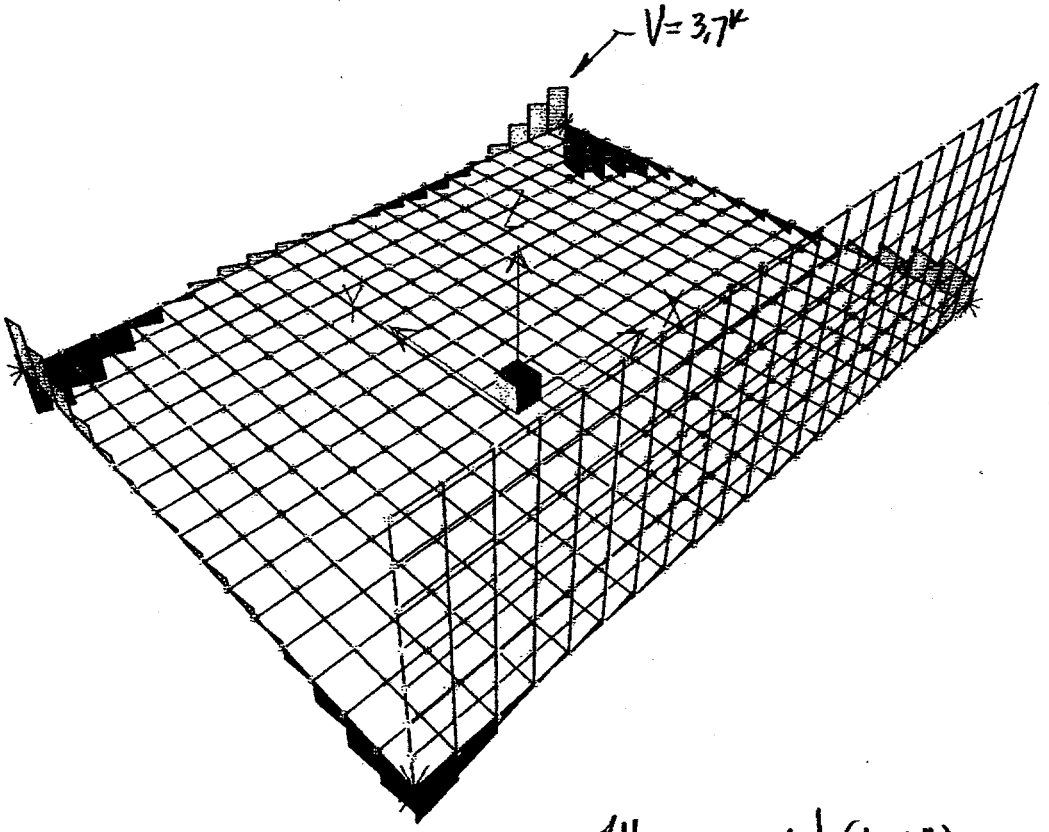

ϕV_n = 32k ok! (h=16")

SAP2000 v7.40 - File:CrestPadBldg - Shear Force 2-2 Diagram (U1) - Kip-ft Units

48/49.

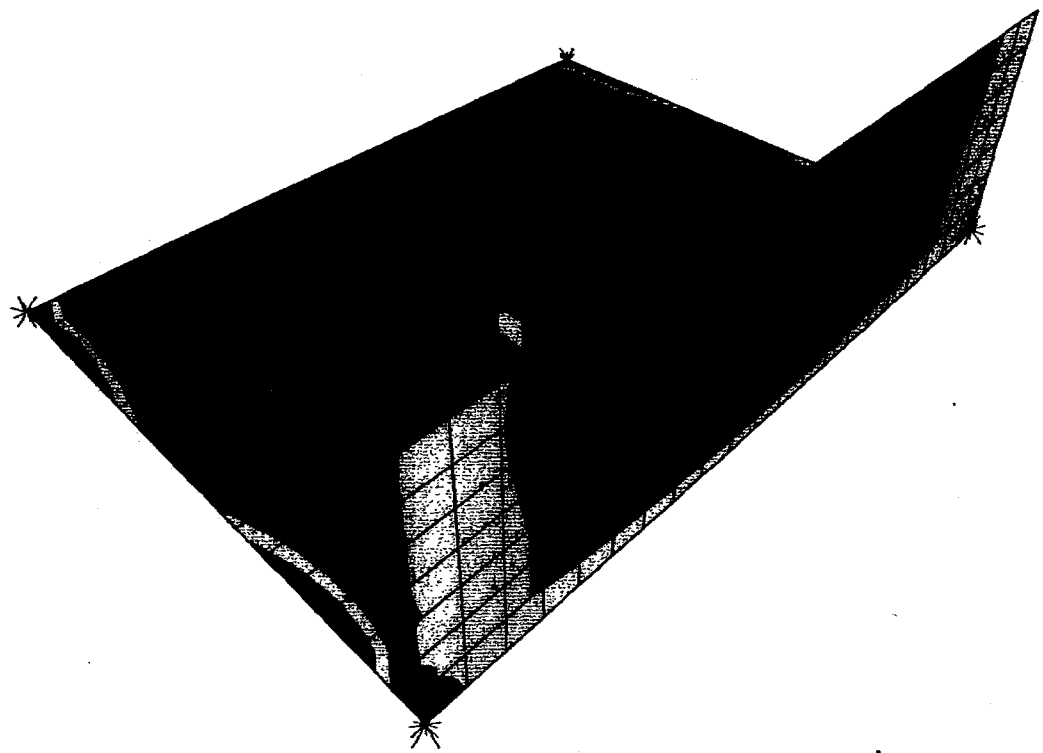

$\phi M_n = 3.20 k'/'$ ok!

$M_u = 0.76 k'/'$

-760. -570. -380. -190. 0. 190. 380. 570. 760. E-3

SAP2000 v7.40 - File:CrestPadBldg - Resultant M11 Diagram (U1) - Kip-ft Units

49/49.

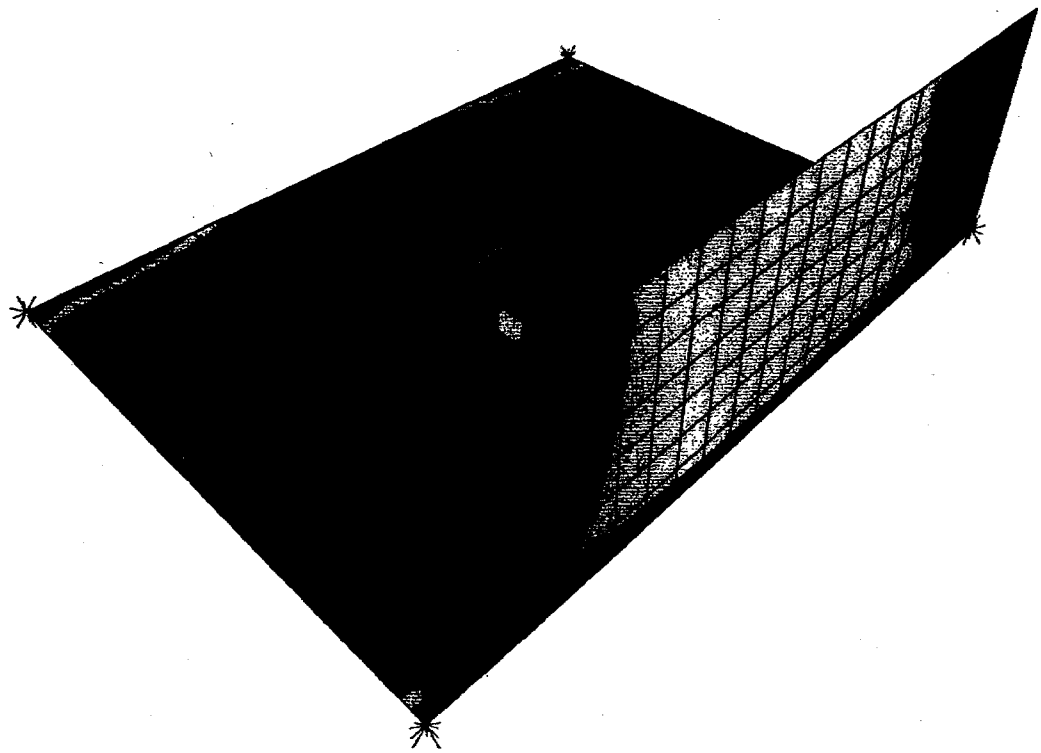

$\phi M_n = 320$ k', ok!

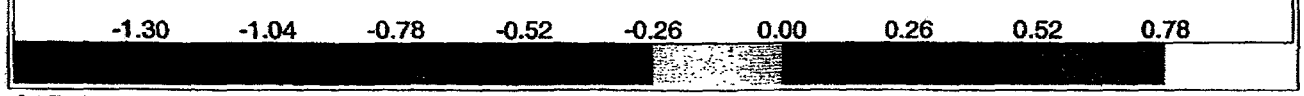

SAP2000 v7.40 - File:CrestPadBldg - Resultant M22 Diagram (U1) - Kip-ft Units

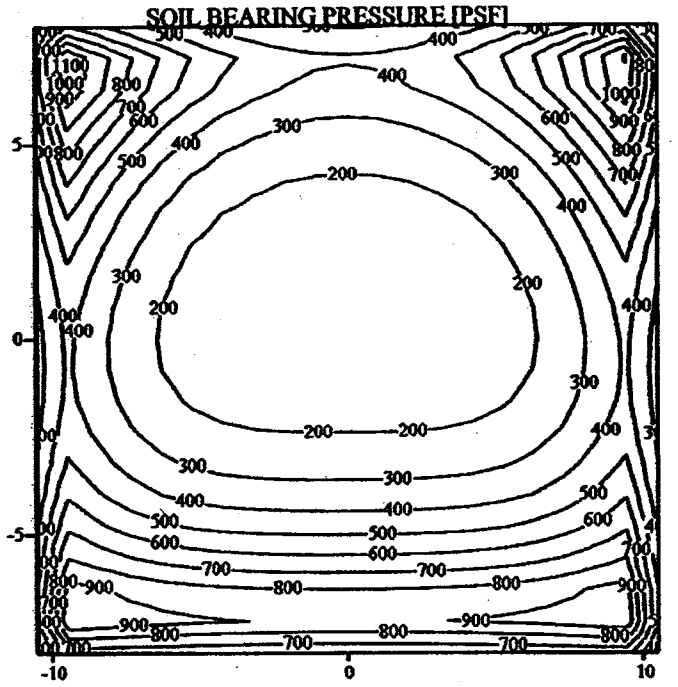

(A,B,C)

— S1 COMBINATION —

σ_{all} = 10 KSF ok!

No Negative (UPLIFT), ok.

ANCHOR BLOCKS:

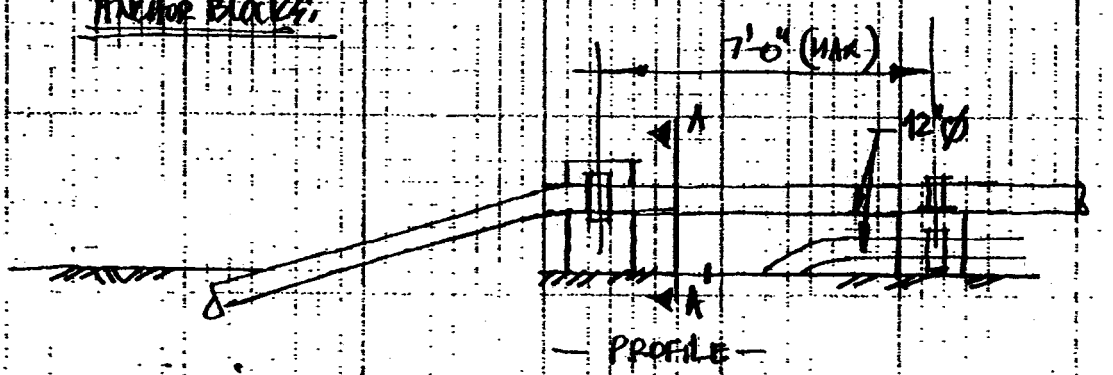

WEIGHTS: SDR=17

12"Ø WATER: ID = 11.25"; OD = 12.75"; TH$_W$ = .75"

$A_W = 0.69\ FT^2$ $\gamma_W = 62.4\ PCF$

$W_W = 43\ PLF$

$A_P = (12.75^2 - 11.25^2)\frac{\pi}{4}/144 = 0.196\ FT^2 = 28.27\ in^2$

$W_P = 12.4\ PLF$

STABILITY CHECK:

SECTION A-A':

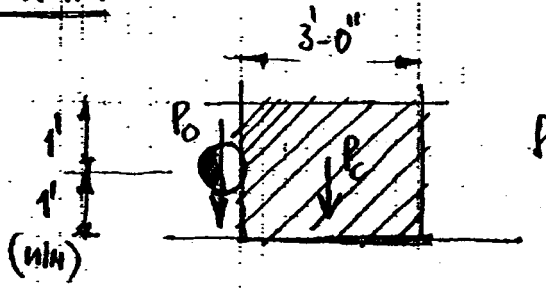

$P_C = 150 \times 3 \times 2 \times 2 = 1800^{\#}$

$OTM = (43+13)\,7' \times 0.5' = 196\ lb'$

$M_R = 1800 \times 1.5 = 2700\ lb.$ FS = 14 ok!

TEMPERATURE CHANGE EFFECTS WILL BE TAKEN BY THE BURIED END OF THE PIPE.

STRUCTURAL CALCS

— APPENDIX —

1000 series Data Sheet

Customer Benefits

High quality Driscopipe® 1000 is manufactured from extra high molecular weight, high density PE 3408 polyethylene pipe grade resin.

Butt Fusion Conditions: 75 psig interfacial fusion pressure required at 375-400°F

This black, weather-resistant pipe exhibits...

- **Outstanding Chemical & Corrosion Resistance**
- **High Environmental Stress Crack Resistance**
- **Excellent Flow Characteristics**
- **Toughness & Ductility**
- **Flexibility & Ease of Installation**
- **Abrasion Endurance**
- **Fatigue Endurance**
- **Reliability**
- **Available Sizes: 3/4" through 54"**

Suggested Industries and Applications

- **Acid / caustic lines**
- **Agriculture**
- **Aquaculture**
- **Brine**
- **Cement Plants**
- **Coal Slurry/ Coal Prep**
- **De-watering**
- **Dredging/ Sand/ Gravel**
- **Dual containment**
- **Fertilizer**
- **Fly ash lines**
- **Golf courses**
- **Hard Rock Disposal**
- **Hazardous Wastes**
- **High purity processes**
- **Ice Rinks**
- **Industrial**
- **Inorganic Chemicals**
- **Irrigation**
- **Leachate collection**
- **Marinas**
- **Metal (Cu, Al, Fe, etc.)**
- **Mining**
- **Organic Chemicals**
- **Petrochemicals**
- **Pulp/ Paper/ Wood**
- **River crossings**
- **Salt Mines**
- **Sludge piping**
- **Snow Melting/ Making**
- **Storage tank piping**
- **Sugar Mills**
- **Swimming Pools**
- **SX acid mining**
- **Tailings Slurry**
- **Temporary pipelines**
- **Utility/ process piping**

...and many others

Specification Data

The resin, pipe, & fittings comply with these accepted (and other) industry standards . . .

ASTM F 714 (Pipe)

ASTM D 3261 (Fittings)

Cell Classification
ASTM D 3350 - 345464C

PPI - PE3408 Designation

Factory Mutual (by size per order)

Typical Physical Properties* of Driscopipe® 1000 (PE 3408) Polyethylene Pipe Resin

Property		Test Method	Unit	Value
Material Designation		PPI / ASTM	--------	PE 3408
Material Classification		ASTM D 3350	--------	Type III; PE34
Cell Classification		ASTM D 3350	--------	345464C
Density	(3)	ASTM D 1505	gms/cm³	0.955
Melt Flow	(4)	ASTM D 1238(2.16/190)	gms/10 min.	0.11 ♦
Flex Modulus	(5)	ASTM D 790	psi	110,000
Tensile Strength	(4)	ASTM D 638	psi	3,200
PENT	(6)	ASTM F 1473	Hours	>100
HDB @ 73.4°F	(4)	ASTM D 2837	psi	1,600
U-V Stabilizer	(C)	ASTM D 1603	% C	> 2
Hardness		ASTM D 2240	Shore D	65
Tensile Strength @ Yield (Type IV Specimen)		ASTM D 638 (2"/min.)	psi	3,200
Tensile Strength @ Break (Type IV Specimen)		ASTM D 638	psi	5,000
Elongation at Break		ASTM D 638	%, minimum	750
Modulus of Elasticity (Young's Modulus)		ASTM D 638	psi	130,000
ESCR (Cond A,B, C: Mold. Slab)		ASTM D 1693	F_o, Hours	>5,000
(Compressed Ring - pipe)		ASTM F 1248	F_o, Hours	>3,500
PENT		ASTM F 1473	Hours	>100
Impact Strength (IZOD) (.125" Thick)		ASTM D 256 (Method A)	in-lb/in. notch	42
Linear Thermal Expansion Coeff.		ASTM D 696	in/ in/ °F	1.2×10^{-4}
Thermal Conductivity		ASTM D 177	BTU-in/ft²/ hrs/°F	2.7
Brittleness Temperature		ASTM D 746	°F	< -180
Vicat Softening Temperature		ASTM D 1525	°F	257

*This list of typical physical properties is intended for basic characterization of the material and does not represent specific determinations or specifications. The Physical properties values reported herein were determined on compression molded specimens prepared in accordance with Procedure C of ASTM D-1928 and may differ from specimens taken from the pipe.

♦ Average Melt Index value with a standard deviation of 0.01

Distributed By:

PLASTICS PIPE INSTITUTE

ISO 9001 CERTIFIED

PPFA MIDWEST PLASTIC PIPE AND FITTINGS ASSOCIATION

This document reports accurate and reliable information to the best of our knowledge but our suggestions and recommendations cannot be guaranteed because the conditions of use are beyond our control. The user of such information assumes all risk connected with the use thereof. Phillips 66 Company and its subsidiaries assume no responsibility for the use of information presented herein and hereby expressly disclaim all liability in regards to such use.

To secure product information or leave a message for a sales engineer or technical service representative:
Phone: 1-800-527-0662
Fax: 1-972-669-5959
www.driscopipe.com

Phillips 66 — Phillips Driscopipe
A DIVISION OF PHILLIPS PETROLEUM COMPANY

Effective: 5-18-99

DIMENSION RATIO

1000 SERIES INDUSTRIAL PIPE
Sizes and Dimensions

Nom. Size (in)	DR	Weight lb/100ft	Dimensions, Inches OD	Approx. ID	Min.Wall	Coil/ Joint feet
2	9.0	76	2.375	1.847	0.264	150/250/300/350/500 1000/1500/2000 20 40
2	11.0	64	2.375	1.943	0.216	150/250/300/350/500 1000/1500/2000 20 40
2	13.5	53	2.375	2.023	0.176	150/250/300/350/500 1000/1500/2000 20 40
2	17.0	43	2.375	2.095	0.140	150/250/300/350/500 1000/1500/2000 20 40
3	9.0	166	3.500	2.722	0.389	220/315/375 500/700/1000 20 40
3	11.0	139	3.500	2.864	0.318	220/315/375 500/700/1000 20 40
3	13.5	115	3.500	2.982	0.259	220/315/375 500/700/1000 20 40
3	17.0	93	3.500	3.088	0.206	220/315/375 500/700/1000 20 40
3	21.0	77	3.500	3.166	0.167	20 40
3	26.0	62	3.500	3.230	0.135	20 40

Nom. Size (in)	DR	Weight lb/100ft	Dimensions, Inches OD	Approx. ID	Min.Wall	Coil/ Joint feet
4	9.0	274	4.500	3.500	0.500	365/450/475/600
						20
						40
4	11.0	229	4.500	3.682	0.409	365/450/475/600
						20
						40
4	13.5	190	4.500	3.834	0.333	365/450/475/600
						20
						40
4	17.0	154	4.500	3.970	0.265	365/450/475/600
						20
						40
4	21.0	126	4.500	4.072	0.214	20
						40
4	26.0	103	4.500	4.154	0.173	20
						40
5	9.0	418	5.563	4.327	0.618	20/40/50
	11.0	351		4.551	0.506	20/40/50
	13.5	291		4.739	0.412	20/40/50
	17.0	235		4.909	0.327	20/40/50
	21.0	193		5.033	0.265	20/40/50
	26.0	157		5.135	0.214	20/40/50
6	9.0	593	6.625	5.153	0.736	20/40/50
	11.0	497		5.421	0.602	20/40/50
	13.5	413		5.643	0.491	20/40/50
	17.0	334		5.845	0.390	20/40/50
	21.0	273		5.995	0.315	20/40/50
	26.0	223		6.115	0.255	20/40/50
7	9.0	686	7.125	5.541	0.792	20/40/50
	11.0	575		5.829	0.648	20/40/50
	13.5	478		6.069	0.528	20/40/50
	17.0	386		6.287	0.420	20/40/50
	21.0	316		6.445	0.340	20/40/50
	26.0	258		6.577	0.274	20/40/50
8	9.0	1005	8.625	6.709	0.958	20/40/50
	11.0	842		7.057	0.784	20/40/50
	13.5	700		7.347	0.639	20/40/50
	17.0	565		7.611	0.507	20/40/50
	21.0	464		7.803	0.411	20/40/50
	26.0	379		7.961	0.332	20/40/50

Nom. Size (in)	DR	Weight lb/100ft	Dimensions, Inches OD	Approx. ID	Min.Wall	Coil/ Joint feet
10	9.0	1561	10.750	8.362	1.194	20/40/50
	11.0	1309		8.796	0.977	20/40/50
	13.5	1087		9.158	0.796	20/40/50
	17.0	878		9.486	0.632	20/40/50
	21.0	721		9.726	0.512	20/40/50
	26.0	587		9.924	0.413	20/40/50
12	9.0	2197	12.750	9.916	1.417	20/40/50
	11.0	1841		10.432	1.159	20/40/50
	13.5	1529		10.862	0.944	20/40/50
	17.0	1236		11.250	0.750	20/40/50
	21.0	1013		11.536	0.607	20/40/50
	26.0	826		11.770	0.490	20/40/50
14	9.0	2650	14.000	10.888	1.556	20/40/50
	11.0	2220		11.454	1.273	20/40/50
	13.5	1844		11.926	1.037	20/40/50
	17.0	1491		12.352	0.824	20/40/50
	21.0	1222		12.666	0.667	20/40/50
	26.0	996		12.924	0.538	20/40/50
16	9.0	3460	16.000	12.444	1.778	20/40/50
	11.0	2900		13.090	1.455	20/40/50
	13.5	2409		13.630	1.185	20/40/50
	17.0	1946		14.118	0.941	20/40/50
	21.0	1596		14.476	0.762	20/40/50
	26.0	1301		14.770	0.615	20/40/50
18	9.0	4379	18.000	14.000	2.000	20/40/50
	11.0	3669		14.728	1.636	20/40/50
	13.5	3048		15.334	1.333	20/40/50
	17.0	2464		15.882	1.059	20/40/50
	21.0	2019		16.286	0.857	20/40/50
	26.0	1647		16.616	0.692	20/40/50
20	9.0	5405	20.000	15.556	2.222	20/40/50
	11.0	4530		16.364	1.818	20/40/50
	13.5	3763		17.038	1.481	20/40/50
	17.0	3041		17.648	1.176	20/40/50
	21.0	2493		18.096	0.952	20/40/50
	26.0	2034		18.462	0.769	20/40/50

Nom. Size (in)	DR	Weight lb/100ft	Dimensions, Inches OD	Approx. ID	Min.Wall	Coil/ Joint feet
22	9.0	6540	22.000	17.112	2.444	20/40/50
	11.0	5482		18.000	2.000	20/40/50
	13.5	4556		18.740	1.630	20/40/50
	17.0	3680		19.412	1.294	20/40/50
	21.0	3018		19.904	1.048	20/40/50
	26.0	2461		20.308	0.846	20/40/50
24	9.0	7785	24.000	18.666	2.667	20/40/50
	11.0	6524		19.636	2.182	20/40/50
	13.5	5421		20.444	1.778	20/40/50
	17.0	4381		21.176	1.412	20/40/50
	21.0	3591		21.714	1.143	20/40/50
	26.0	2930		22.154	0.923	20/40/50
26	11.0	7657	26.000	21.272	2.364	20/40/50
	13.5	6362		22.148	1.926	20/40/50
	17.0	5139		22.942	1.529	20/40/50
	21.0	4214		23.524	1.238	20/40/50
	26.0	3439		24.000	1.000	20/40/50
28	11.0	8878	28.000	22.910	2.545	20/40/50
	13.5	7378		23.852	2.074	20/40/50
	17.0	5962		24.706	1.647	20/40/50
	21.0	4886		25.334	1.333	20/40/50
	26.0	3988		25.846	1.077	20/40/50
30	13.5	8469	30.000	25.556	2.222	20/40/50
	17.0	6845		26.470	1.765	20/40/50
	21.0	5612		27.142	1.429	20/40/50
	26.0	4578		27.692	1.154	20/40/50
800mm	13.5	9335	31.496	26.830	2.333	20/40/50
	17.0	7545		27.790	1.853	20/40/50
	21.0	6185		28.496	1.500	20/40/50
	26.0	5044		29.074	1.211	20/40/50
32	13.5	9635	32.000	27.260	2.370	20/40/50
	17.0	7786		28.236	1.882	20/40/50
	21.0	6384		28.952	1.524	20/40/50
	26.0	5210		29.538	1.231	20/40/50

Nom. Size (in)	DR	Weight lb/100ft	Dimensions, Inches OD	Approx. ID	Min.Wall	Coil/ Joint feet
34	13.5	10881	34.000	28.962	2.519	20/40/50
	17.0	8791		30.000	2.000	20/40/50
	21.0	7206		30.762	1.619	20/40/50
	26.0	5881		31.384	1.308	20/40/50
36	13.5	12198	36.000	30.666	2.667	20/40/50
	17.0	9857		31.764	2.118	20/40/50
	21.0	8078		32.572	1.714	20/40/50
	26.0	6594		33.230	1.385	20/40/50
	32.5	5320		33.784	1.108	20/40/50
1000mm	17.0	11788	39.370	34.738	2.316	20/40/50
	21.0	9664		35.620	1.875	20/40/50
	26.0	7883		36.342	1.514	20/40/50
	32.5	6369		36.948	1.211	20/40/50
42	19.0	12089	42.000	37.578	2.211	20/40/50
	21.0	10997		38.000	2.000	20/40/50
	26.0	8971		38.770	1.615	20/40/50
	32.5	7237		39.416	1.292	20/40/50
1200mm	21.0	13916	47.244	42.744	2.250	20/40/50
	26.0	11353		43.610	1.817	20/40/50
	32.5	9162		44.336	1.454	20/40/50
54	26.0	14833	54.000	49.846	2.077	20/40/50
	32.5	11970		50.676	1.662	20/40/50

TABLE 16-C—MINIMUM ROOF LIVE LOADS[1]

ROOF SLOPE	METHOD 1			METHOD 2		
	Tributary Loaded Area in Square Feet for Any Structural Member × 0.0929 for m²			Uniform Load[2] (psf)	Rate of Reduction *r* (percentage)	Maximum Reduction *R* (percentage)
	0 to 200	201 to 600	Over 600			
	Uniform Load (psf) × 0.0479 for kN/m²					
1. Flat[3] or rise less than 4 units vertical in 12 units horizontal (33.3% slope). Arch or dome with rise less than one eighth of span	20	16	12	20	.08	40
2. Rise 4 units vertical to less than 12 units vertical in 12 units horizontal (33% to less than 100% slope). Arch or dome with rise one eighth of span to less than three eighths of span	16	14	12	16	.06	25
3. Rise 12 units vertical in 12 units horizontal (100% slope) and greater. Arch or dome with rise three eighths of span or greater	12	12	12	12	No reductions permitted	
4. Awnings except cloth covered[4]	5	5	5	5		
5. Greenhouses, lath houses and agricultural buildings[5]	10	10	10	10		

[1]Where snow loads occur, the roof structure shall be designed for such loads as determined by the building official. See Section 1614. For special-purpose roofs, see Section 1607.4.4.
[2]See Sections 1607.5 and 1607.6 for live load reductions. The rate of reduction *r* in Section 1607.5 Formula (7-1) shall be as indicated in the table. The maximum reduction *R* shall not exceed the value indicated in the table.
[3]A flat roof is any roof with a slope of less than $^1/_4$ unit vertical in 12 units horizontal (2% slope). The live load for flat roofs is in addition to the ponding load required by Section 1611.7.
[4]As defined in Section 3206.
[5]See Section 1607.4.4 for concentrated load requirements for greenhouse roof members.

TABLE 16-D—MAXIMUM ALLOWABLE DEFLECTION FOR STRUCTURAL MEMBERS[1]

TYPE OF MEMBER	MEMBER LOADED WITH LIVE LOAD ONLY (*L.*)	MEMBER LOADED WITH LIVE LOAD PLUS DEAD LOAD (*L.* + *K.D.*)
Roof member supporting plaster or floor member	*l*/360	*l*/240

[1]Sufficient slope or camber shall be provided for flat roofs in accordance with Section 1611.7.
L.—live load.
D.—dead load.
K.—factor as determined by Table 16-E.
l—length of member in same units as deflection.

TABLE 16-E—VALUE OF "K"

WOOD		REINFORCED CONCRETE[2]	STEEL
Unseasoned	Seasoned[1]		
1.0	0.5	$T/(1+50\rho')$	0

[1]Seasoned lumber is lumber having a moisture content of less than 16 percent at time of installation and used under dry conditions of use such as in covered structures.
[2]See also Section 1909 for definitions and other requirements.
ρ' shall be the value at midspan for simple and continuous spans, and at support for cantilevers. Time-dependent factor *T* for sustained loads may be taken equal to:

five years or more	2.0
twelve months	1.2
six months	1.4
three months	1.0

TABLE 16-F—WIND STAGNATION PRESSURE (q_s) AT STANDARD HEIGHT OF 33 FEET (10 058 mm)

Basic wind speed (mph)[1] (× 1.61 for km/h)	70	80	90	100	110	120	130
Pressure q_s (psf) (× 0.0479 for kN/m^2)	12.6	16.4	20.8	25.6	31.0	36.9	43.3

[1]Wind speed from Section 1618.

TABLE 16-G—COMBINED HEIGHT, EXPOSURE AND GUST FACTOR COEFFICIENT (C_e)[1]

HEIGHT ABOVE AVERAGE LEVEL OF ADJOINING GROUND (feet) × 304.8 for mm	EXPOSURE D	EXPOSURE C	EXPOSURE B
0-15	1.39	1.06	0.62
20	1.45	1.13	0.67
25	1.50	1.19	0.72
30	1.54	1.23	0.76
40	1.62	1.31	0.84
60	1.73	1.43	0.95
80	1.81	1.53	1.04
100	1.88	1.61	1.13
120	1.93	1.67	1.20
160	2.02	1.79	1.31
200	2.10	1.87	1.42
300	2.23	2.05	1.63
400	2.34	2.19	1.80

[1]Values for intermediate heights above 15 feet (4572 mm) may be interpolated.

TABLE 16-H—PRESSURE COEFFICIENTS (C_q)

STRUCTURE OR PART THEREOF	DESCRIPTION	C_q FACTOR
1. Primary frames and systems	**Method 1** (Normal force method)	
	Walls:	
	Windward wall	0.8 inward
	Leeward wall	0.5 outward
	Roofs[1]:	
	Wind perpendicular to ridge	
	Leeward roof or flat roof	0.7 outward
	Windward roof	
	less than 2:12 (16.7%)	0.7 outward
	Slope 2:12 (16.7%) to less than 9:12 (75%)	0.9 outward or 0.3 inward
	Slope 9:12 (75%) to 12:12 (100%)	0.4 inward
	Slope > 12:12 (100%)	0.7 inward
	Wind parallel to ridge and flat roofs	0.7 outward
	Method 2 (Projected area method)	
	On vertical projected area	
	Structures 40 feet (12 192 mm) or less in height	1.3 horizontal any direction
	Structures over 40 feet (12 192 mm) in height	1.4 horizontal any direction
	On horizontal projected area[1]	0.7 upward
2. Elements and components not in areas of discontinuity[2]	Wall elements	
	All structures	1.2 inward
	Enclosed and unenclosed structures	1.2 outward
	Partially enclosed structures	1.6 outward
	Parapets walls	1.3 inward or outward
	Roof elements[3]	
	Enclosed and unenclosed structures	
	Slope < 7:12 (58.3%)	1.3 outward
	Slope 7:12 (58.3%) to 12:12 (100%)	1.3 outward or inward
	Partially enclosed structures	
	Slope < 2:12 (16.7%)	1.7 outward
	Slope 2:12 (16.7%) to 7:12 (58.3%)	1.6 outward or 0.8 inward
	Slope > 7:12 (58.3%) to 12:12 (100%)	1.7 outward or inward
3. Elements and components in areas of discontinuities[2,4,5]	Wall corners[6]	1.5 outward or 1.2 inward
	Roof eaves, rakes or ridges without overhangs[6]	
	Slope < 2:12 (16.7%)	2.3 upward
	Slope 2:12 (16.7%) to 7:12 (58.3%)	2.6 outward
	Slope > 7:12 (58.3%) to 12:12 (100%)	1.6 outward
	For slopes less than 2:12 (16.7%)	
	Overhangs at roof eaves, rakes or ridges, and canopies	0.5 added to values above
4. Chimneys, tanks and solid towers	Square or rectangular	1.4 any direction
	Hexagonal or octagonal	1.1 any direction
	Round or elliptical	0.8 any direction
5. Open-frame towers[7,8]	Square and rectangular	
	Diagonal	4.0
	Normal	3.6
	Triangular	3.2
6. Tower accessories (such as ladders, conduit, lights and elevators)	Cylindrical members	
	2 inches (51 mm) or less in diameter	1.0
	Over 2 inches (51 mm) in diameter	0.8
	Flat or angular members	1.3
7. Signs, flagpoles, lightpoles, minor structures[8]		1.4 any direction

[1]For one story or the top story of multistory partially enclosed structures, an additional value of 0.5 shall be added to the outward C_q. The most critical combination shall be used for design. For definition of partially enclosed structures, see Section 1616.

[2]C_q values listed are for 10-square-foot (0.93 m^2) tributary areas. For tributary areas of 100 square feet (9.29 m^2), the value of 0.3 may be subtracted from C_q, except for areas at discontinuities with slopes less than 7 units vertical in 12 units horizontal (58.3% slope) where the value of 0.8 may be subtracted from C_q. Interpolation may be used for tributary areas between 10 and 100 square feet (0.93 m^2 and 9.29 m^2). For tributary areas greater than 1,000 square feet (92.9 m^2), use primary frame values.

[3]For slopes greater than 12 units vertical in 12 units horizontal (100% slope), use wall element values.

[4]Local pressures shall apply over a distance from the discontinuity of 10 feet (3048 mm) or 0.1 times the least width of the structure, whichever is smaller.

[5]Discontinuities at wall corners or roof ridges are defined as discontinuous breaks in the surface where the included interior angle measures 170 degrees or less.

[6]Load is to be applied on either side of discontinuity but not simultaneously on both sides.

[7]Wind pressures shall be applied to the total normal projected area of all elements on one face. The forces shall be assumed to act parallel to the wind direction.

[8]Factors for cylindrical elements are two thirds of those for flat or angular elements.

TABLE 16-I—SEISMIC ZONE FACTOR Z

ZONE	1	2A	2B	3	4
Z	0.075	0.15	0.20	0.30	0.40

NOTE: The zone shall be determined from the seismic zone map in Figure 16-2.

TABLE 16-J—SOIL PROFILE TYPES

SOIL PROFILE TYPE	SOIL PROFILE NAME/GENERIC DESCRIPTION	AVERAGE SOIL PROPERTIES FOR TOP 100 FEET (30 480 mm) OF SOIL PROFILE		
		Shear Wave Velocity, $\bar{v}_s$ feet/second (m/s)	Standard Penetration Test, $\bar{N}$ [or $\bar{N}_{CH}$ for cohesionless soil layers] (blows/foot)	Undrained Shear Strength, $\bar{s}_u$ psf (kPa)
S_A	Hard Rock	> 5,000 (1,500)	—	—
S_B	Rock	2,500 to 5,000 (760 to 1,500)		
S_C	Very Dense Soil and Soft Rock	1,200 to 2,500 (360 to 760)	> 50	> 2,000 (100)
S_D	Stiff Soil Profile	600 to 1,200 (180 to 360)	15 to 50	1,000 to 2,000 (50 to 100)
S_E[1]	Soft Soil Profile	< 600 (180)	< 15	< 1,000 (50)
S_F	Soil Requiring Site-specific Evaluation. See Section 1629.3.1.			

[1]Soil Profile Type S_E also includes any soil profile with more than 10 feet (3048 mm) of soft clay defined as a soil with a plasticity index, $PI > 20$, $w_{nc} \geq 40$ percent and $s_u < 500$ psf (24 kPa). The Plasticity Index, PI, and the moisture content, w_{nc}, shall be determined in accordance with approved national standards.

TABLE 16-K—OCCUPANCY CATEGORY

OCCUPANCY CATEGORY	OCCUPANCY OR FUNCTIONS OF STRUCTURE	SEISMIC IMPORTANCE FACTOR, I	SEISMIC IMPORTANCE[1] FACTOR, I_p	WIND IMPORTANCE FACTOR, I_w
1. Essential facilities[2]	Group I, Division 1 Occupancies having surgery and emergency treatment areas Fire and police stations Garages and shelters for emergency vehicles and emergency aircraft Structures and shelters in emergency-preparedness centers Aviation control towers Structures and equipment in government communication centers and other facilities required for emergency response Standby power-generating equipment for Category 1 facilities Tanks or other structures containing housing or supporting water or other fire-suppression material or equipment required for the protection of Category 1, 2 or 3 structures	1.25	1.50	1.15
2. Hazardous facilities	Group H, Divisions 1, 2, 6 and 7 Occupancies and structures therein housing or supporting toxic or explosive chemicals or substances Nonbuilding structures housing, supporting or containing quantities of toxic or explosive substances that, if contained within a building, would cause that building to be classified as a Group H, Division 1, 2 or 7 Occupancy	1.25	1.50	1.15
3. Special occupancy structures[3]	Group A, Divisions 1, 2 and 2.1 Occupancies Buildings housing Group E, Divisions 1 and 3 Occupancies with a capacity greater than 300 students Buildings housing Group B Occupancies used for college or adult education with a capacity greater than 500 students Group I, Divisions 1 and 2 Occupancies with 50 or more resident incapacitated patients, but not included in Category 1 Group I, Division 3 Occupancies All structures with an occupancy greater than 5,000 persons Structures and equipment in power-generating stations, and other public utility facilities not included in Category 1 or Category 2 above, and required for continued operation	1.00	1.00	1.00
4. Standard occupancy structures[3]	All structures housing occupancies or having functions not listed in Category 1, 2 or 3 and Group U Occupancy towers	1.00	1.00	1.00
5. Miscellaneous structures	Group U Occupancies except for towers	1.00	1.00	1.00

[1]The limitation of I_p for panel connections in Section 1633.2.4 shall be 1.0 for the entire connector.
[2]Structural observation requirements are given in Section 1702.
[3]For anchorage of machinery and equipment required for life-safety systems, the value of I_p shall be taken as 1.5.

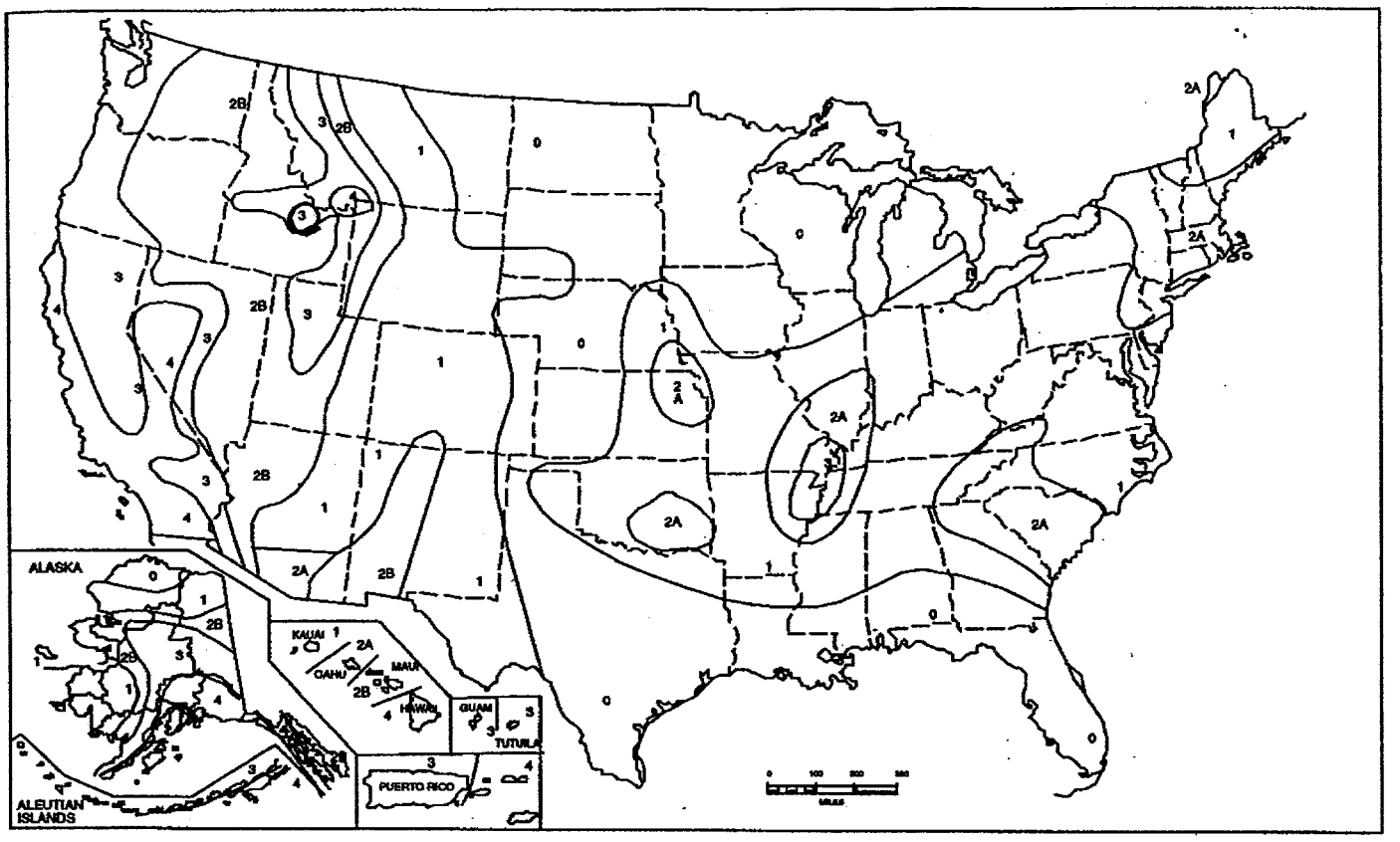

FIGURE 16-2—SEISMIC ZONE MAP OF THE UNITED STATES
For areas outside of the United States, see Appendix Chapter 16.

0111-1. CODES AND STANDARDS

1.1 Applicable Codes and Standards

- AES 0100-1, Codes and Standards
- DOE Order 420.1, Facility Safety
- DOE-STD-1020, Natural Phenomena Hazards Design and Evaluation Criteria for Department of Energy Facilities
- DOE-STD-1021, Natural Phenomena Hazards Performance Categorization Guidelines for Structures, Systems, and Components

1.2 Referenced Codes and Standards

- ASCE 4 Seismic Analysis of Safety-Related Nuclear Structures
- ASCE 7, Minimum Design Loads for Buildings and Other Structures
- Factory Mutual Data Sheet 1-54
- USNRC Regulatory Guide 1.60

1.3 Other References

- DOE-ID--12118, Climatography of the INEL, 2nd Ed., December 1, 1989
- INEEL/EXT-99-00775, Development of Probabilistic Design Basis Earthquake (DBE) Parameters for Moderate and High Hazard Facilities at INEEL, Revision 1, March 2000.
- AES Appendix S

0111-2. GENERAL

2.1 Structural design shall conform to applicable sections of DOE-STD-1020, the criteria contained in this document, and the specific project design criteria, and shall comply with current editions of pertinent nationally recognized codes and standards as referenced herein.

2.2 Natural phenomena requirements (for example: seismic, wind, tornado, flood) shall be in accordance with DOE-STD-1020 with additional guidelines as indicated in the following subparagraphs. The natural phenomena performance category (PC) for structures, systems, and components shall be defined in the project design criteria.

0111-3. TEST BORINGS

3.1 Test borings or other subsurface investigations shall be considered in designing below grade structures or foundations for structures imposing heavy or unusual soil loading conditions. Underground rock formations at the INEEL vary widely, and at many locations the rock is at or near the surface. Therefore, it is essential that subsurface conditions be known in designing underground structures. Rock depths

and soil conditions are known in some areas. This information will be furnished to the AE where available. Where subsurface investigation is not warranted, the allowable soil pressure for design purposes shall be in accordance with the UBC. See Section 0200, Civil Design for a summary of some limited soil data

0111-4. FOUNDATIONS

4.1 Footings shall be designed such that they are adequate to support the structure and keep differential settlements within acceptable limits. Design frost depth shall be obtained from data such as that contained in DOE/ID--12118. Unless such data is used, frost depth shall be considered to be 5 ft. Footing design shall consider soil conditions, load, settlement, and any other pertinent factors.

0111-5. GENERAL LOADING REQUIREMENTS

5.1 Unless otherwise specified herein loads shall comply with ASCE 7 and DOE-STD-1020 as applicable.

5.2 Unusual loadings not covered by the codes will be identified in the project design criteria.

0111-6. SNOW LOAD

6.1 A ground snow load of at least 35 lb/ft^2 shall be used in ASCE 7 calculations. A minimum roof snow load of 30 lb/ft^2 shall be used in all INEEL designs. Suitable calculational techniques and additional information are given in Factory Mutual Data Sheet 1-54 and ASCE 7.

0111-7. TORNADO LOADS

7.1 Unless otherwise directed in specific project design criteria, buildings and structures shall not be designed for tornado loads. When tornado loading is required, it shall be done in accordance with DOE-STD-1020.

Not Required

0111-8. WIND LOADS

8.1 All structures, systems, components, or portions thereof subject to wind loading shall be designed in accordance with DOE-STD-1020. If fastest mile wind speed is used as the basic wind speed, the design shall use the procedures and requirements of ASCE 7-93 or the UBC. The following table gives the fastest mile wind speeds at the INEEL for the four performance categories.

Table 1. Fastest Mile Wind Speeds for the INEEL (mph)

PC 1	PC 2	PC 3	PC 4
70	70	84	95

8.2 If 3-second gust basic wind speed is used as the basic wind speed, the design shall use the procedures and requirements of ASCE 7-95. The following table gives the 3-second speeds at the INEEL for the four performance categories.

Table 2. 3-second Gust Wind Speeds for the INEEL (mph)

PC 1	PC 2	PC 3	PC 4
90	90	TBD	TBD

0111-9. SEISMIC LOADS

9.1 General: To clarify the application of these guidelines with regard to modifications to existing facilities see DOE Order 420.1. Seismic design shall conform to the requirements of DOE-STD-1020 except as modified herein.

9.2 Seismic loads shall be considered in the design of all permanent buildings, structures, cranes, towers, etc. An earthquake shall be assumed capable of occurring at any time. For design purposes, the simultaneous occurrence of an earthquake with any other limiting site-related event, such as high winds, fire, or flood need not be considered except where the joint occurrence is causally related. Such instances will be identified in specific project design criteria. Additional requirements, for cranes involved in "critical" lifts, will be identified in specific project design criteria.

9.3 **Performance Categories 1 and 2** (see DOE-STD-1021). The UBC shall govern and shall be used as the basis for design.

9.4 **Performance Categories 3 and 4 General Information**

(a) The application of design spectra is governed by DOE-STD-1020.

(b) It is felt that the peak ground acceleration values presented are conservative and should be used for most projects. Where the cost of studies, analysis, and characterization is economically justified for larger projects, project site-specific values may be used per DOE-STD-1020.

(c) The methodology presented in DOE-STD-1020 is based upon a probabilistic definition of the facility performance goals as expressed in annual probability of exceedance. A deterministic approach is then used to evaluate structural adequacy.

(d) INEEL site-specific time histories for INTEC, PBF, RWMC, and TRA, and DBE response spectra for rock conditions at TAN and some soil conditions at INTEC are included in AES Appendix S and can be referenced to INEEL/EXT-99-0775. New PC 3 or PC 4 facilities at other INEEL locations

not within the applicable region may require development of site-specific probabilistic hazard curves.

(e) Equivalent static analysis methods as defined in ASCE 4 may be used for simple structures. An example of a simple structure is a one or two story shear wall building.

9.5 **Performance Categories 3 and 4 at INTEC, PBF, RWMC, and TRA** The following seismic design parameters shall be used for the design or analysis of PC 3 and PC 4 facilities at INTEC, PBF, RWMC and TRA. The PC 3 and PC 4 rock DBE can be used for design and seismic evaluation of facilities at the rock surface and for input to soil response analyses (See Appendix S for appropriate use of time histories for rock and bedrock outcrop conditions). The PC 3 and PC 4 rock DBE is applicable to the region around the applicable facility areas. See AES Appendix S and INEEL/EXT-99-00775 for additional information.

(a) Table 3 contains peak ground accelerations (PGA) and peak displacements to be used at INTEC, PBF, RWMC and TRA for SSC's founded on rock.

Table 3. PGA (g) and Peak Displacement (in) on Rock for 5% Damped DBE Response Spectra at INTEC, TRA, RWMC, and PBF

Horizontal				Vertical			
PC 3		PC 4		PC 3		PC 4	
PGA	Disp.	PGA	Disp.	PGA	Disp.	PGA	Disp.
0.123	4.0	0.187	6.0	0.095	2.7	0.144	4.0

(b) Tables S-1, S-2, S-3 and S-4 in Appendix S contain rock response spectra control points at other damping values for PC 3 and PC 4 facilities at INTEC, PBF, RWMC, and TRA.

(c) Tables S-8 and S-9 contain soil 5% damped response spectra control points for PC 3 and PC 4 facilities at INTEC. The PC 3 and PC 4 soil DBE response spectra are applicable at INTEC. They may be applicable to other facility areas where the soil conditions are within the thickness range (30 to 50 ft of soil) and where the soil properties are demonstrated to be similar to those used in development of the DBE response spectra for INTEC (See Appendix S Section 4.2 for details). Where not applicable, soil response analyses can be performed as specified under paragraph 9.7.

9.6 **Performance Categories 3 and 4 at TAN** The following seismic design parameters shall be used for the design or analysis of PC 3 and PC 4 facilities at TAN for rock surface conditions.

(a) Table 4 contains PGA and peak displacements to be used at TAN for SSC's founded on rock.

Table 4. PGA (g) and Peak Displacement (in) on Rock for 5% Damped DBE Response Spectra at TAN

Horizontal				Vertical			
PC 3		PC 4		PC 3		PC 4	
PGA	Disp.	PGA	Disp.	PGA	Disp.	PGA	Disp.

Table 4. PGA (g) and Peak Displacement (in) on Rock for 5% Damped DBE Response Spectra at TAN

Horizontal				Vertical			
PC 3		PC 4		PC 3		PC 4	
0.16	4.0	0.27	6.0	0.12	2.7	0.21	4.0

(b) Tables S-5 and S-6 contain rock 5% damped response spectra control points for PC 3 and PC 4 facilities at TAN. At this time, no time histories have been developed for rock surface or bedrock outcrop conditions at TAN. No soil response spectra have been developed for TAN. Additional geotechnical information on the soil properties and thickness is required for TAN.

9.7 **Performance Categories 3 and 4 Soil Response Analyses** Only the horizontal time histories for the PC 3 and PC 3 rock DBE can be used for bedrock outcrop conditions at INTEC, TRA, RWMC, and PBF for soil response and soil-structure interaction analyses. See Appendix S Section 4.0 for steps to develop the vertical component using the horizontal component and site-specific V/H ratio developed for INEEL (see INEEL/EXT-99-00775 for additional information).

0111-10. SEISMIC INSTRUMENTATION

10.1 The INEEL has a network of seismic instrumentation that will normally satisfy the requirement for seismic instrumentation from DOE O 420.1. Construction of new facilities may require additional instrumentation.

0111-11. FLOOD

11.1 Protection against flooding shall be considered in the design when required by the project design criteria. The data for the design basis flood will also be provided. Flood design shall be in accordance with DOE-STD-1020. The INEEL site-specific standard for a 25 year, 6 hour storm is 1.4 in. total. This storm shall be used as a minimum for the design of roof systems, localized storm runoff and drainage.

0111-12. ISOLATION PADS

12.1 Heavy items of equipment, such as boilers, diesel engine generators, heavy machine tools, large pumps, large compressors, etc., shall be anchored on separate, reinforced foundations which are isolated from the floor system.

5.2 Restrictions

5.2.1 The Subcontractor shall design the landfill and evaporation pond liner systems such that there shall be no liner penetrations.

5.3 Performance Requirements

5.3.1 The ICDF landfill shall accommodate the movement of waste transport vehicles. All INEEL roadways must be designed in accordance with the State of Idaho Transportation Department, Division of Highways, Standard Specification for Highway Construction.

5.3.2 The ICDF roadway shall be constructed with asphaltic concrete and shall accommodate the movement of a waste transport vehicle having a maximum single axle weight of 20,000 lb. ← TRUCK LOAD.

5.3.3 The ICDF landfill shall be designed and constructed to accept wastes containing less than or equal to 10 nCi/g transuranic constituents.

5.3.4 The Subcontractor shall consider National Emission Standards for Hazardous Air Pollutants (NESHAP) emissions in the design of the landfill and evaporation pond pursuant to 40 CFR 61.92 and 40 CFR 61.93. The results of NESHAP modeling will be provided by the Contractor.

5.4 Environmental Regulatory Requirements and/or Site and Operating Requirements

5.4.1 The ICDF Complex shall be designed and constructed to meet the T&FRs/ARARs as listed in Appendix C of this specification.

5.4.2 All work performed during the construction of the ICDF landfill and evaporation pond shall be in accordance with the Contractor-generated, health and safety plan (HASP).

5.4.3 The Subcontractor shall complete INEEL Form 450.16, "Storm Water Pollution Prevention Plan for Construction." The Subcontractor shall perform all work in accordance with DOE/ID-10425, INEEL Storm Water Pollution Prevention Plan for Construction Activities; applicable sections of MCP-3658, Storm Water Pollution Prevention; and Form 450.16.

5.5 Natural Phenomena Requirements

5.5.1 The ICDF shall be designed and constructed in accordance with the applicable DOE-ID Architectural Engineering Standards, latest revision.

Minimum values of peak ground acceleration (PGA) shall be:

0.06g for Performance Category 3

0.10g for Performance Category 4

2.3.1 Performance Category 1 and 2 Structures, Systems, and Components. (SSC's)

Seismic design or evaluation of Performance Category 2 and lower SSCs is based on model building code seismic provisions. In these criteria, the current version of the Uniform Building Code shall be followed. Alternatively, the other equivalent model building codes may be used. All UBC seismic provisions shall be followed for Performance Category 2 and lower SSCs (with modifications as described below).

In the UBC provisions, beginning with the 1988 edition, the lateral force representing the earthquake loading on buildings is expressed in terms of the total base shear, V, given by the following equation:

$$V = \frac{ZICW}{R_w} \qquad (2\text{-}1)$$

where:

Z	=	a seismic zone factor equivalent to peak ground acceleration,
I	=	a factor accounting for the importance of the facility,
C	=	a spectral amplification factor,
W	=	the total weight of the facility,
R_W	=	a reduction factor to account for energy absorption capability of the facility which results in element forces which represent inelastic seismic demand, D_{SI}

The steps in the procedure for PC-1 and 2 SSCs are as follows:

- Evaluate element forces for non-seismic loads, D_{NS}, expected to be acting concurrently with an earthquake.
- Evaluate element forces, D_{SI}, for earthquake loads.

  a. Static force method, where V is applied as a load distributed over the height of the structure for regular facilities, or dynamic force method for irregular facilities as described in the UBC.

  b. In either case, the total base shear is given by Equation 2-1 where the parameters are evaluated as follows:

  1. Z is the peak ground acceleration from site-specific seismic hazard curves at the following exceedance probabilities if available:

For systems and components, spectral amplification is accounted for by C_p in the UBC equipment force equation as discussed in Section 2.4.1.

3. If a recent site-specific seismic hazard assessment is not available, it is acceptable to determine ZC from Table C-5 values and appropriate response spectra. For eastern U.S. sites DOE -STD-1024 provides guidance. If ZC, determined from a recent site-specific assessment is less than that given by UBC provisions, any significant differences with UBC must be justified. Final earthquake loads are subject to approval by DOE.

4. Importance factor, I, should be taken as:

   Performance Category 1, I = 1.0

   Performance Category 2, I = 1.25

5. For structures, reduction factors, R_W, are shown in Table 2-2. For systems and components, the reduction factor is implicitly included in C_p.

- Combine responses from various loadings (D_{NS} and D_{SI}) to evaluate demand, D_{TI}, by code specified load combination rules (e.g., load factors for ultimate strength design or unit load factors for allowable stress design).
- Evaluate capacities of SSCs, C_C, from code ultimate values when strength design is used (e.g., UBC Chapter 19 for reinforced concrete or LRFD for steel) or from allowable stress levels (with one-third increase) when allowable stress design is used. Minimum specified or 95% non-exceedance in-situ values for material strengths should be used for capacity estimation.
- Compare demand, D_{TI}, with capacity, C_C, for all SSCs. If D_{TI} is less than or equal to C_C, the facility satisfies the seismic force requirements. If D_{TI} is greater than C_C, the facility has inadequate seismic resistance.

Reimbold, Mike/SEA

From: Despradel, Shukre/SEA
Sent: September 04, 2001 2:52 PM
To: Reimbold, Mike/SEA
Subject: FW: INEEL -Soil Properties-

Mike:
This is the info that we need to design.
Thanks,

shukre

-----Original Message-----
From: Despradel, Shukre/SEA
Sent: August 27, 2001 3:57 PM
To: Sampaco, King/SEA
Subject: INEEL -Soil Properties-

Hi King:
This is the list of soil properties that we'll need to design the structural elements involved in this project:
1-To design a concrete slab on grade that is going to support traffic load. Ref. Dwg. A/S-203:
K (Mod. of Subgrade Reaction). $k_v = 600$ k/ft³ OK
Fall (Allowable bearing) and if we could increase by 33% for Temp Loads. $q_a = 8.0$ ksf
2-Crest Pad Building:
Fall for wall footings.
The soil classification to define the seismic load using UBC. → S_D
Thanks,

$q_a = 10.0$ ksf

See attached for detail

Shukre Despradel
sdesprad@ch2m.com
x-5834
10th Floor

CH2MHILL SUBJECT ICDF BY MWReinbold

Geotech Parameters for Structural Design SHEET NO. 1 of ___ DATE 9/6/01

PROJECT NO. 162870.2A.02

Determine: K_v - modulus of subgrade reaction for concrete slab on grade @ truck loading facility (see A/S-203 in 30% design)

Given: Truck loading pad and Crest Pad Buildings will be constructed on embankment fill. Embankment fill will consist of alluvium material (SW/GW) from landfill excavation. Per specifications this material will be compacted to min 95% Relative compaction (Standard Proctor ASTM D698). Conservative basis is that fill will be dense to very dense.

Method 1: Use empirical chart from NAVFAC - see attached Fig 6 p. 7.1-219

a) coarse-grained soil
b) dry condition
c) use 90% relative density

$K_{vi} = 300 \text{ Tons}/ft^3 = 600 \text{ kip}/ft^3$

Method 2: Table 7.1 from Teng (1964) - Foundation Design

a) Granular soil
b) Dense, dry

$K_v = 600 \text{ lb}/in^3 \times 1728 \text{ in}^3/ft^3 \approx 1000 \text{ kip}/ft^3$

Use lower value from NAVFAC → $K_v = 600 \text{ k}/ft^3$

Due to the loosening of the soil during construction, the settlement of footings is usually greater than predicted on the basis of undisturbed soils. In fact, for narrow wall footings less than two feet wide the design should be based on the loosened condition. For the purpose of design, the modulus of subgrade reaction for granular soils should not be taken as greater than two times that at the ground surface.

Based on the discussions above, a general equation may be written to include the effect of size and depth for square footings on granular soils

$$k = k_1\left(\frac{B+1}{2B}\right)^2\left(1+\frac{2D}{B}\right) \tag{7-10}$$

but not to exceed

$$2k_1\left(\frac{B+1}{2B}\right)^2$$

The modulus of elasticity for a purely cohesive soil with uniform properties from the ground to a great depth is practically constant throughout the depth. Therefore, the depth has no effect on the value of modulus of foundation.

Table 7-1 COEFFICIENT OF SUBGRADE REACTION k_1 FOR 1 FT × 1 FT PLATES OR LONG FOOTINGS OF 1 FT WIDTH* (lb per cu in.)

	Granular soils		
Relative density	*Loose*	*Medium*	*Dense*
	45	150	600
Dry or moist	(Range = 20–70)	(Range = 70–350)	(Range = 350–1200)
Submerged	30	90	350

	Cohesive soils			
Consistancy	*Soft and very soft*	*Stiff*	*Very stiff*	*Hard*
Unconfined strength tons/sq ft	0–1	1–2	2–4	4 and over
	Design as if foundation is perfectly rigid	85 (Range = 60–120)	175 (Range = 120–230)	350 (230 and over)

* After Terzaghi (1955).

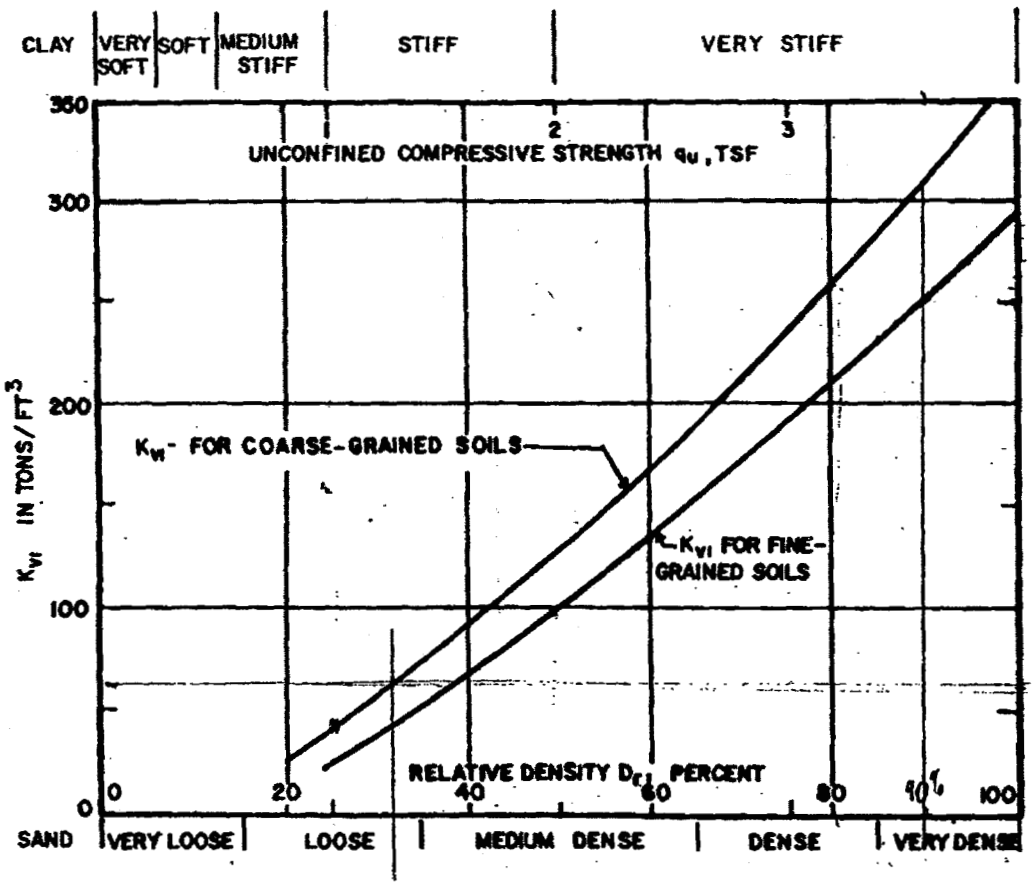

DEFINITIONS

ΔH_i = IMMEDIATE SETTLEMENT OF FOOTING
q = FOOTING UNIT LOAD IN tsf
B = FOOTING WIDTH

D = DEPTH OF FOOTING BELOW GROUND SURFACE
K_{vi} = MODULUS OF VERTICAL SUBGRADE REACTION

COARSE-GRAINED SOILS

(MODULUS OF ELASTICITY INCREASING LINEARLY WITH DEPTH)
SHALLOW FOOTINGS $D \leq B$
FOR $B \leq 20$ FT:

$$\Delta H_i = \frac{4\,q\,B^2}{K_{vi}\,(B+1)^2}$$

FOR $B \geq 40$ FT:

$$\Delta H_i = \frac{2\,q\,B^2}{K_{vi}\,(B+1)^2}$$

INTERPOLATE FOR INTERMEDIATE VALUES OF B

DEEP FOUNDATION $D \geq 5B$
FOR $B \leq 20$ FT:

$$\Delta H_i = \frac{2\,q\,B^2}{K_{vi}\,(B+1)^2}$$

NOTES: 1. NONPLASTIC SILT IS ANALYZED AS COARSE-GRAINED SOIL WITH MODULUS OF ELASTICITY INCREASING LINEARLY WITH DEPTH.
2. VALUES OF K_{vi} SHOWN FOR COARSE-GRAINED SOILS APPLY TO DRY OR MOIST MATERIAL WITH THE GROUNDWATER LEVEL AT A DEPTH OF AT LEAST 1.5B BELOW BASE OF FOOTING. IF GROUNDWATER IS AT BASE OF FOOTING, USE $K_{vi}/2$ IN COMPUTING SETTLEMENT
3. FOR CONTINUOUS FOOTINGS MULTIPLY THE SETTLEMENT COMPUTED FOR WIDTH "B" BY 2.

FIGURE 6
Instantaneous Settlement of Isolated Footings on Coarse-Grained Soils

CH2MHILL SUBJECT ICDF BY MWR
Geotech Parameters for Structural SHEET NO. 2 of DATE 7/6/01
PROJECT NO. 1628TO.2A.02

Determine: Allowable bearing pressure concrete slab on grade for truck loading pad

Given: Compacted embankment with alluvium material (SW/CW) to 95% Standard Proctor. Blow Counts (N-value) from Geotech report are unreliable to extrapolate to engineering properties because of high gravel content (reference → ICDF Geotech Report (DOE TD 10812, 2000)

Compacted fill embankment will be dense to very dense material → estimate N value = 30 (conservative)

Method 1: Use equations from Teng (1984) - Foundation Design for mat foundation on sand or gravel

a) $q_a = \frac{4}{3} N^2 B R_w + 4(100 + \cancel{N^2}^{\,0}) D R_w$

B = smallest dimension of mat = 16'-0" (width of truck load pad)

R_w = Water Level Reduction = 1

D = Foundation Depth = Ø

N = 30

$q_a = \frac{4}{3}(30)^2(16) = \underline{19.2 \text{ ksf}}$ w/ FS = 3.0

b) $q_a = 360(N-3) R_w$

$q_a = 360(27) = \underline{9.7 \text{ ksf}}$ w/ FS = 3.0

Method 2: Use Table 95-1 from Terzaghi and Peck (1948) - Soil Mechanics in Engineering Practice

- dense to very dense
- tolerable settlement = 2 in for mat
- select upper to mid-range value

q_A = 4 tons/sf = 8 ksf ⇐ use $\boxed{q_A = 8.0 \text{ ksf}}$

Ok to increase by 1/3 for temp loads

3. Replace the continuous soil reaction by equivalent concentrated reactions R_a, R_b, ... There are three methods of converting the distributed reaction into concentrated reactions; they are explained in Fig. 7-10. The simplest method (a) is used in the example.
4. The footing under the applied loads and the equivalent reactions should satisfy the equations for equilibrium, i.e. $\Sigma M = 0$ and $\Sigma V = 0$. Write equations for the $\Sigma M = 0$ at any panel points and $\Sigma V = 0$ for the whole system, in terms of A, B, C, ...
5. Solve the simultaneous equations for values of A, B, C, ...

It is seen that this method requires very little labor. The only tedious work is the solution of simultaneous equations. With the advent of electronic digital computers, this is no longer a lengthy procedure. However, this method, as the method of successive approximation, may not converge.

7-6 Allowable Bearing Pressure for Mat Foundations

The procedure for determining the allowable bearing pressure under footings and mat foundations was described in Chapter 6. However, a structure supported on a mat of 20 ft × 20 ft or larger can withstand greater settlements than one supported on spread footings. Mat foundation tends to bridge over irregularities or heterogeneity of the soil and the average settlement does not approach the extreme values of spread footings. Therefore, the allowable bearing pressure for mat foundation can be greater than that for footings on the soil insofar as the settlement is concerned. For mat foundations on granular soils, an increase of 100 per cent has been used (Terzaghi and Peck, 1948). The following allowable pressures are applicable for design of mat foundations on sand or gravel.

$$q_1 = \tfrac{1}{3}N^2BR_w + 4(100 + N^2)\,DR_w' \tag{7-3}$$

$$q_2 = 360(N - 3)\,R_w' \tag{7-4}$$

where q_1 and q_2 = allowable soil pressure under mat foundation, psf;
N = number of blows per foot in standard penetration test;
B = smaller dimension of the mat, ft;
D = depth of foundation, ft;
R_w and R_w' = reduction factors for water level, see Fig. 6-4, Sec. 6-3B.

The smaller of q_1 and q_2 should be used.

7-7 Design of Mat Foundations

A. Design of mat foundation by conventional rigid method. In the conventional method it is assumed that the mat is infinitely rigid and that the

ment is 2 in. instead of 1 in. as specified for spread footings. The width B of rafts commonly lies between 40 and 120 ft. Within this range the value of B has very little influence on the maximum settlement (Fig. 54.3). Therefore, the width can be disregarded in selecting the allowable soil pressure. Finally, at least the major part of the sand located within the seat of settlement is likely to be saturated, because the vertical distance between the base of the raft and the water table is commonly small compared to the width of the raft.

The preceding conditions determine the allowable soil pressure, provided the average compressibility of the sand is also taken into account. This property is closely related to the relative density. At present, the most expedient methods for investigating the relative density are the standard penetration test or the Dutch-Cone test (Article 44).

If the standard penetration test is used, one test should be made for every 2½ ft of the depth of the drill hole from the level of the base of the raft to a depth B below this level. The N-value for the hole is equal to the average of all the N-values within this depth. At least 6 drill holes are required, and the allowable soil pressure should be chosen on the basis of the smallest N-value furnished by the tests.

Allowable soil pressures corresponding to different N-values are given in Table 55.1. The values are based on the assumption that

Table 55.1
Proposed Allowable Bearing Values for Rafts on Sand

Relative density of sand	Loose	Medium	Dense	Very dense
N	Less than 10	10–30	30–50	Over 50
q_a	Requires compaction	0.7–2.5	2.5–4.5	Over 4.5

Values are based on maximum settlement of 2 in. use 4.0

Depth of sand stratum is presumed to be greater than the width B of the raft, and water table to be close to or above base of raft. If depth of bedrock is much less than $B/2$, or if water table is at depth greater than $B/2$, the allowable bearing values can be increased.

The loads are presumed to be distributed fairly uniformly over the base of the building. If different parts of a large raft on sand carry very different loads per unit of area, it is advisable to establish construction joints at the boundaries between these parts.

N = number of blows per foot in standard penetration test
q_a = proposed allowable bearing value in tons/ft²

CH2MHILL SUBJECT: ICDF – Crest Pad Bldg Geotech Parameters | BY: M. Reimbold | SHEET NO. 3 of ___ | DATE: 9/6/01 | PROJECT NO. 162870.2A.02

Determine: q_a – allowable bearing pressure for crest pad building wall footings

Given: → see attached sketch of wall footing

$D = 2'-6''$ depth

$B = 1'-8''$ width

→ Construction compacted alluvium embankment dense to very dense SW/GW material

→ $\phi = 40°$ based on Geotech Report (DOE-ID 10812) direct shear of 42° to 44°

$\gamma = 122$ pcf & 90% of γ_{dmax} (135 pcf) from geotech report

Method: Terzaghi's equation for ultimate bearing capacity (q_{ult}) for continuous footing:

$$q_{ult} = \cancel{cN_c} + qN_q + \tfrac{1}{2}\gamma B N_\gamma$$

ϕ for $c = 0$

$$q_{ult} = \gamma D N_q + \tfrac{1}{2}\gamma B N_\gamma$$

For $\phi = 40°$ $N_q = 64.2$

$N_\gamma = 109.4$

$$q_{ult} = \left(122\,\tfrac{lb}{ft^3}\right)(2.5\,ft)(64.2) + \tfrac{1}{2}\left(122\,\tfrac{lb}{ft^3}\right)(1.67\,ft)(109.4)$$

$$= 19{,}581\ psf + 11{,}144$$

$$q_{ult} = 30{,}725\ psf$$

$$q_A = \frac{q_{ult}}{FS} \quad \text{use } FS = 3.0$$

$$\boxed{q_A = \frac{30.73\ ksf}{3.0} \doteq 10.0\ ksf}$$

CH2MHILL SUBJECT _____ BY _____

SHEET NO. ____ of ____ DATE _____

PROJECT NO. _____

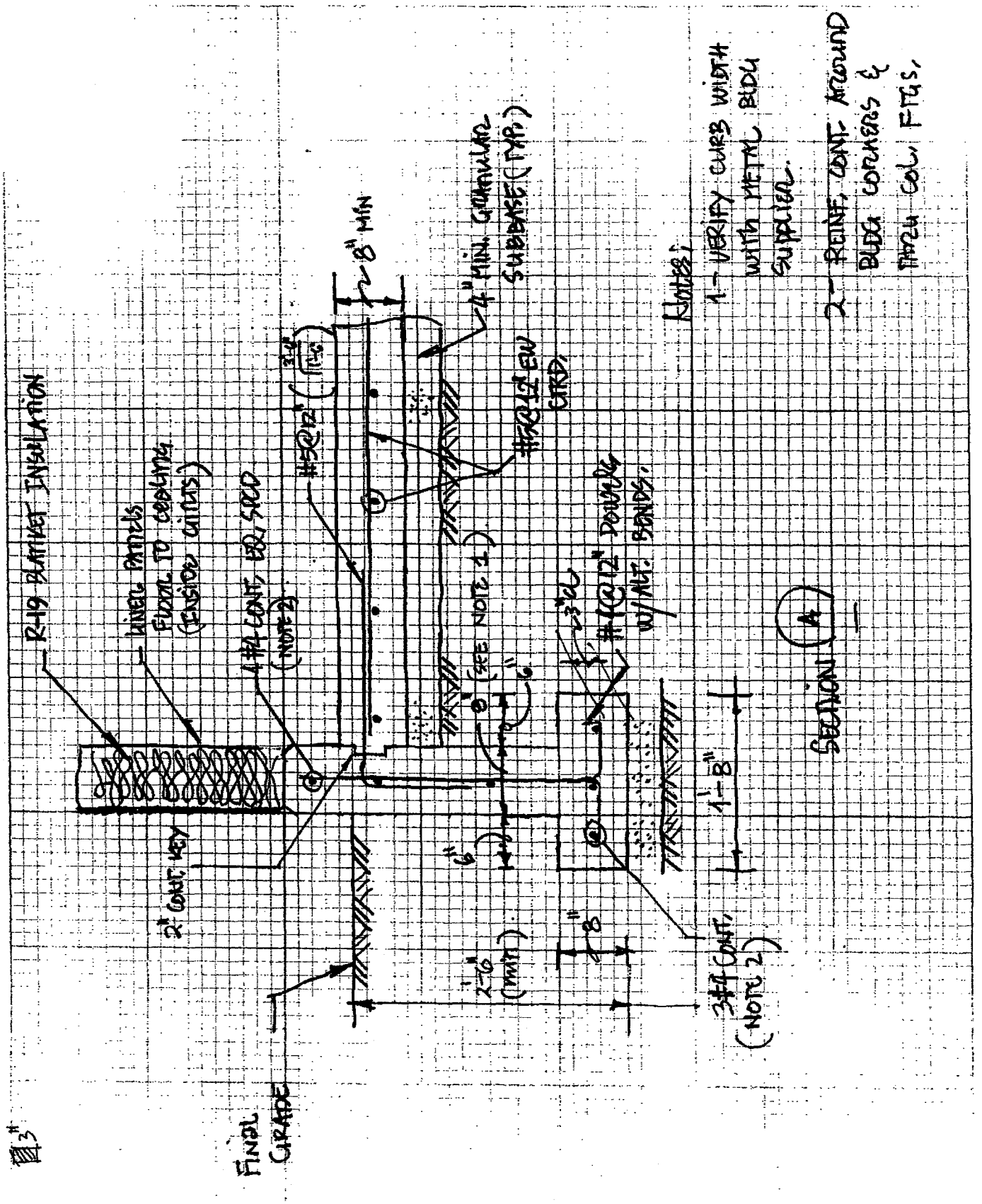

3. Inclination factor: to determine the bearing capacity of a footing on which the direction of load application is inclined at a certain angle to the vertical

Thus, the modified general ultimate bearing capacity equation can be written as

$$q_u = c\lambda_{cs}\lambda_{cd}\lambda_{ci}N_c + q\lambda_{qs}\lambda_{qd}\lambda_{qi}N_q + \frac{1}{2}\lambda_{\gamma s}\lambda_{\gamma d}\lambda_{\gamma i}\gamma B N_\gamma \tag{11.37}$$

where λ_{cs}, λ_{qs}, and $\lambda_{\gamma s}$ = shape factors
λ_{cd}, λ_{qd}, and $\lambda_{\gamma d}$ = depth factors
λ_{ci}, λ_{qi}, and $\lambda_{\gamma i}$ = inclination factors

TABLE 11.1 Bearing Capacity Factors* [Eqs. (11.31), (11.33), and (11.35)]

ϕ (1)	N_c (2)	N_q (3)	N_γ (4)	N_q/N_c (5)	$\tan\phi$ (6)	ϕ (1)	N_c (2)	N_q (3)	N_γ (4)	N_q/N_c (5)	$\tan\phi$ (6)
0	5.14	1.00	0.00	0.20	0.00	26	22.25	11.85	12.54	0.53	0.49
1	5.38	1.09	0.07	0.20	0.02	27	23.94	13.20	14.47	0.55	0.51
2	5.63	1.20	0.15	0.21	0.03	28	25.80	14.72	16.72	0.57	0.53
3	5.90	1.31	0.24	0.22	0.05	29	27.86	16.44	19.34	0.59	0.55
4	6.19	1.43	0.34	0.23	0.07	30	30.14	18.40	22.40	0.61	0.58
5	6.49	1.57	0.45	0.24	0.09	31	32.67	20.63	25.99	0.63	0.60
6	6.81	1.72	0.57	0.25	0.11	32	35.49	[illegible]	30.22	0.65	0.62
7	7.16	1.88	0.71	0.26	0.12	33	38.64	[illegible]	35.19	0.68	0.65
8	7.53	2.06	0.86	0.27	0.14	34	42.16	[illegible]	41.06	0.70	0.67
9	7.92	2.25	1.03	0.28	0.16	35	46.12	[illegible]	48.03	0.72	0.70
10	8.35	2.47	1.22	0.30	0.18	36	50.59	[illegible]	56.31	0.75	0.73
11	8.80	2.71	1.44	0.31	0.19	37	55.63	[illegible]	66.19	0.77	0.75
12	9.28	2.97	1.69	0.32	0.21	38	61.35	[illegible]	78.03	0.80	0.78
13	9.81	3.26	1.97	0.33	0.23	39	67.87	[illegible]	92.25	0.82	0.81
14	10.37	3.59	2.29	0.35	0.25	40	75.31	[illegible]	109.41	0.85	0.84
15	10.98	3.94	2.65	0.36	0.27	41	83.86	[illegible]	130.22	0.88	0.87
16	11.63	4.34	3.06	0.37	0.29	42	93.71	[illegible]	155.55	0.91	0.90
17	12.34	4.77	3.53	0.39	0.31	43	105.11	[illegible]	186.54	0.94	0.93
18	13.10	5.26	4.07	0.40	0.32	44	118.37	[illegible]	224.64	0.97	0.97
19	13.93	5.80	4.68	0.42	0.34	45	133.88	[illegible]	271.76	1.01	1.00
20	14.83	6.40	5.39	0.43	0.36	46	152.10	[illegible]	330.35	1.04	1.04
21	15.82	7.07	6.20	0.45	0.38	47	173.64	[illegible]	403.67	1.08	1.07
22	16.88	7.82	7.13	0.46	0.40	48	199.26	[illegible]	496.01	1.12	1.11
23	18.05	8.66	8.20	0.48	0.42	49	229.93	[illegible]	613.16	1.15	1.15
24	19.32	9.60	9.44	0.50	0.45	50	266.89	[illegible]	762.89	1.20	1.19
25	20.72	10.66	10.88	0.51	0.47						

* After Vesic, 1973.

CH2MHILL SUBJECT ICDF- Crest Pad Bldg Geotech Parameters BY M Reinhold SHEET NO. 4 of DATE 9/6/01 PROJECT NO. 162870.2A.02

Determine: Soil Profile Type for UBC Seismic Design from Table 16-J

Given: Dense to very dense compacted fill of granular alluvium material. Min Relative compaction = 95% Standard Proctor.

⇒ N value of compacted fill will easily fall into 15-50 range as embankment will be compacted to dense to v. dense state

From Table 16-J use soil profile type 16-J: S_D

ZONE	1	2A	2B	3	4
Z	0.075	0.15	0.20	0.30	0.40

TABLE 16-J—SOIL PROFILE TYPES

SOIL PROFILE TYPE	SOIL PROFILE NAME/GENERIC DESCRIPTION	AVERAGE SOIL PROPERTIES FOR TOP 100 FEET (30 480 mm) OF SOIL PROFILE		
		Shear Wave Velocity, $\bar{v}_s$ feet/second (m/s)	Standard Penetration Test, $\bar{N}$ [for $\bar{N}_{CH}$ for cohesionless soil layers] (blows/foot)	Undrained Shear Strength, $\bar{s}_u$ psf (kPa)
S_A	Hard Rock	> 5,000 (1,500)	—	—
S_B	Rock	2,500 to 5,000 (760 to 1,500)		
S_C	Very Dense Soil and Soft Rock	1,200 to 2,500 (360 to 760)	> 50	> 2,000 (100)
S_D	Stiff Soil Profile	600 to 1,200 (180 to 360)	15 to 50	1,000 to 2,000 (50 to 100)
S_E[1]	Soft Soil Profile	< 600 (180)	< 15	< 1,000 (50)
S_F	Soil Requiring Site-specific Evaluation. See Section 1629.3.1.			

[1]Soil Profile Type S_E also includes any soil profile with more than 10 feet (3048 mm) of soft clay defined as a soil with a plasticity index, $PI > 20$, $w_{mc} \geq 40$ percent and $s_u < 500$ psf (24 kPa). The Plasticity Index, PI, and the moisture content, w_{mc}, shall be determined in accordance with approved national standards.

TABLE 16-K—OCCUPANCY CATEGORY

OCCUPANCY CATEGORY	OCCUPANCY OR FUNCTIONS OF STRUCTURE	SEISMIC IMPORTANCE FACTOR, I	SEISMIC IMPORTANCE[1] FACTOR, I_p	WIND IMPORTANCE FACTOR, I_w
1. Essential facilities[2]	Group I, Division 1 Occupancies having surgery and emergency treatment areas Fire and police stations Garages and shelters for emergency vehicles and emergency aircraft Structures and shelters in emergency-preparedness centers Aviation control towers Structures and equipment in government communication centers and other facilities required for emergency response Standby power-generating equipment for Category 1 facilities Tanks or other structures containing housing or supporting water or other fire-suppression material or equipment required for the protection of Category 1, 2 or 3 structures	1.25	1.50	1.15
2. Hazardous facilities	Group H, Divisions 1, 2, 6 and 7 Occupancies and structures therein housing or supporting toxic or explosive chemicals or substances Nonbuilding structures housing, supporting or containing quantities of toxic or explosive substances that, if contained within a building, would cause that building to be classified as a Group H, Division 1, 2 or 7 Occupancy	1.25	1.50	1.15
3. Special occupancy structures[3]	Group A, Divisions 1, 2 and 2.1 Occupancies Buildings housing Group E, Divisions 1 and 3 Occupancies with a capacity greater than 300 students Buildings housing Group B Occupancies used for college or adult education with a capacity greater than 500 students Group I, Divisions 1 and 2 Occupancies with 50 or more resident incapacitated patients, but not included in Category 1 Group I, Division 3 Occupancies All structures with an occupancy greater than 5,000 persons Structures and equipment in power-generating stations, and other public utility facilities not included in Category 1 or Category 2 above, and required for continued operation	1.00	1.00	1.00
4. Standard occupancy structures[3]	All structures housing occupancies or having functions not listed in Category 1, 2 or 3 and Group U Occupancy towers	1.00	1.00	1.00
5. Miscellaneous structures	Group U Occupancies except for towers	1.00	1.00	1.00

[1]The limitation of I_p for panel connections in Section 1633.2.4 shall be 1.0 for the entire connector.
[2]Structural observation requirements are given in Section 1702.
[3]For anchorage of machinery and equipment required for life-safety systems, the value of I_p shall be taken as 1.5.