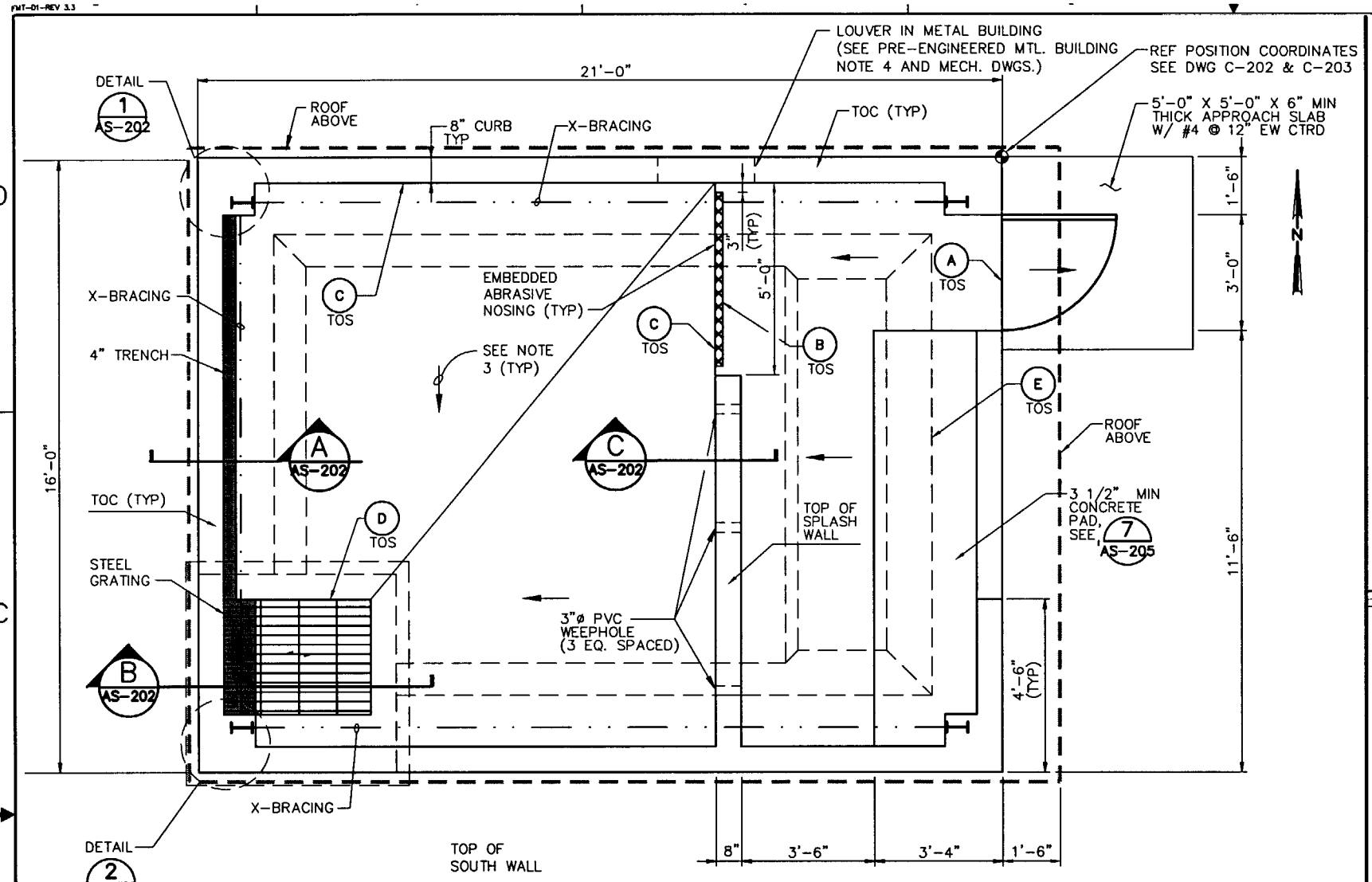

FOUNDATION PLAN

1/2" = 1'-0"

0 1 2 3
1/2" = 1'-0"

REV	DESCRIPTION	EFFECTIVE DATE:
0	APPROVED FOR CONSTRUCTION	14 MAY 2002

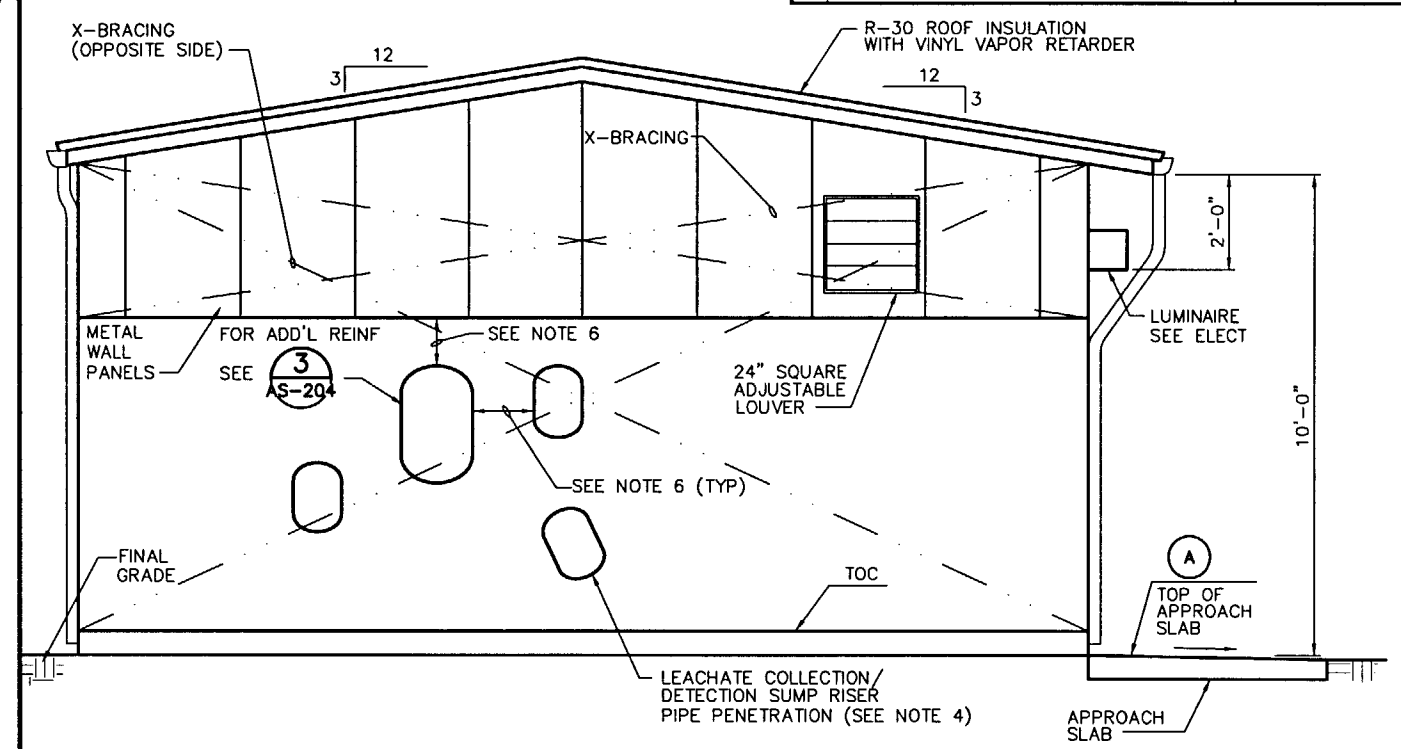

SOUTH ELEVATION

1/2" = 1'-0"

0 1 2 3
1/2" = 1'-0"

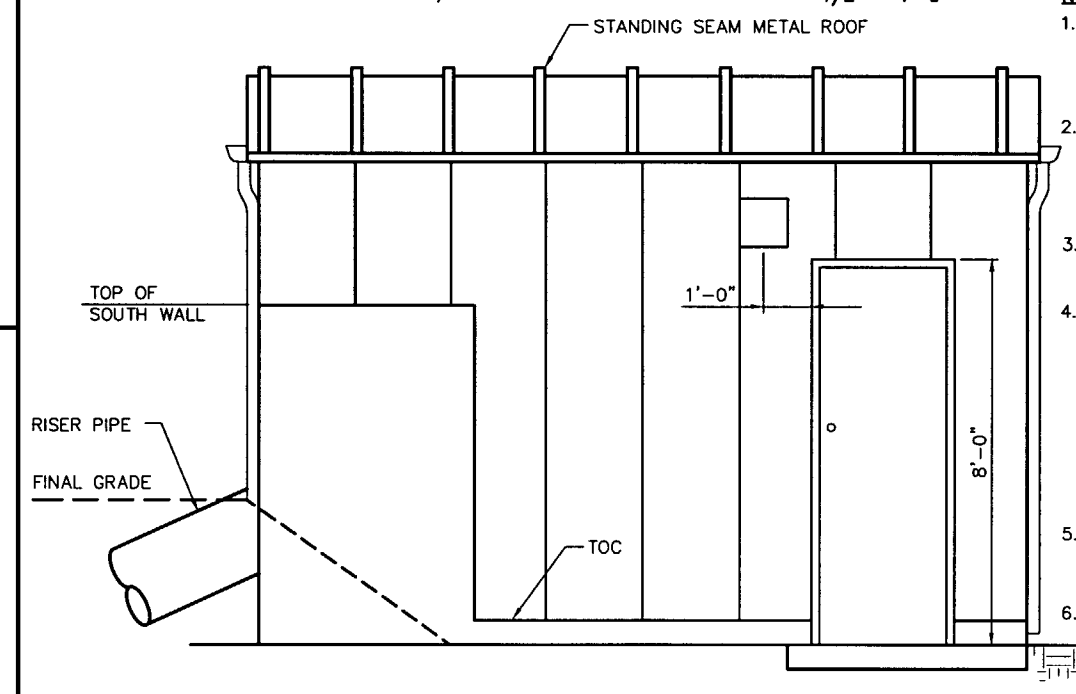

EAST ELEVATION

1/2" = 1'-0"

0 1 2 3
1/2" = 1'-0"

NOTES:

1. FOR REINFORCING STEEL NOTES, SEE 1 AS-204
2. FOR ADDITIONAL REINFORCING REQUIRED AROUND OPENINGS, SEE 3 AS-204
3. MINIMUM SURFACE SLOPE: 1/8":12"
4. RISER PIPE PENETRATION LOCATIONS ARE SHOWN FOR LANDFILL CREST PAD BUILDING. SEE P-205 FOR DETAIL. REFER TO P-206 FOR EVAPORATION POND BUILDING RISER PIPE LOCATIONS. SEE DETAIL 4 P-210 FOR PIPE SLEEVE EMBEDS.
5. PROVIDE EXTERIOR BUILDING LETTERS AS SPECIFIED IN SECTION 10440.
6. MINIMUM DIST = 1 x (PIPE DIAM.)

CREST PAD BUILDING ELEVATIONS

NAME	LANDFILL POND	EVAP. POND
FINAL GRADE	4929'-0"	4928'-0"
Ⓐ	4929'-1"	4928'-1"
Ⓑ	4929'-0"	4928'-0"
Ⓒ	4928'-6"	4927'-6"
Ⓓ	4928'-4"	4927'-4"
Ⓔ	4929'-4 1/2"	4928'-4 1/2"
TOP OF CURB (TOC)	4929'-7"	4928'-7"
TOP OF SPLASH WALL	4936'-1"	4935'-1"
TOP OF SOUTH WALL	4936'-1"	4931'-1"

ABBREVIATIONS:

TOS = TOP OF SLAB
TOC = TOP OF CURB

GENERAL STRUCTURAL NOTES:

DESIGN CODES:

1997 UNIFORM BUILDING CODE
DOE-ID ARCHITECTURAL & ENGINEERING STANDARD, LATEST VERSION

DESIGN LOADS:

1. ROOF SNOW LOAD ..... 30 PSF
2. ROOF LIVE LOAD ..... 20 PSF
3. COLLATERAL LOADS ..... 10 PSF
4. WIND ..... 70 MPH BASIC SPEED
   EXPOSURE C, I=1.15
5. SEISMIC ..... ZONE 3, I=1.25
   PERFORMANCE CATEGORY PC-1, AS STATED IN DOE-ID ARCHITECTURAL & ENGINEERING STANDARD

FOUNDATIONS: ..... 8000 PSF
ALLOWABLE BEARING PRESURE

MATERIALS

A. CONCRETE STRENGTH: MIN 4000 PSI COMPRESSIVE (CLASS 40) @ 28 DAYS
B. REINFORCING STEEL: ASTM 615, GRADE 60
C. ANCHOR BOLTS: DESIGNED BY BID MANUFACTURER

PRE-ENGINEERED METAL BUILDING

1. VERIFY ALL DIMENSIONS PRIOR TO PLACING CONCRETE.
2. MINIMIUM PLAN DIMENSIONS OF BUILDING SHOWN. MINOR ADJUSTMENTS MAY BE REQUIRED BY THE TYPE OF BUILDING SUPPLIED BY CONTRACTOR.
3. WIDTH OF CURB MAY VARY, VERIFY ACTUAL WIDTH WITH BUILDING SUPPLIER.
4. HVAC UNIT TO BE SUPPORTED BY METAL BUILDING WALL. COORDINATE SIZE, LOCATIONS AND OPENINGS (LOUVERS) WITH BUILDING VENDOR.

REGISTERED PROFESSIONAL ENGINEER STATE OF IDAHO KENT B SOELBERG 5-8-02

SUBCONTRACT NO.	S01-588058
REVISER:	
DESIGN:	S. DESPRADEL
DRAWN:	JOSHUA PRETS
PROJECT NO.	
SPEC CODE	
FOR REVIEW/APPROVAL SIGNATURES SEE DIR NO.	DAR
EFFECTIVE DATE:	

INEEL (Idaho National Engineering & Environmental Laboratory) BECHTEL BWXT IDAHO, LLC

CH2MHILL MWH MONTGOMERY WATSON HARZA

INEEL CERCLA DISPOSAL FACILITY (ICDF)

CREST PAD BUILDING
PLAN AND ELEVATIONS

SIZE	CAGE CODE	INDEX CODE NUMBER AREA	TYPE	CL	ORIG	DWG-	REV
D		B21	0100	02			0

SCALE: AS SHOWN CPP SHEET AS-201

REVISIONS		
REV	DESCRIPTION	EFFECTIVE DATE:
0	APPROVED FOR CONSTRUCTION	14 MAY 2002

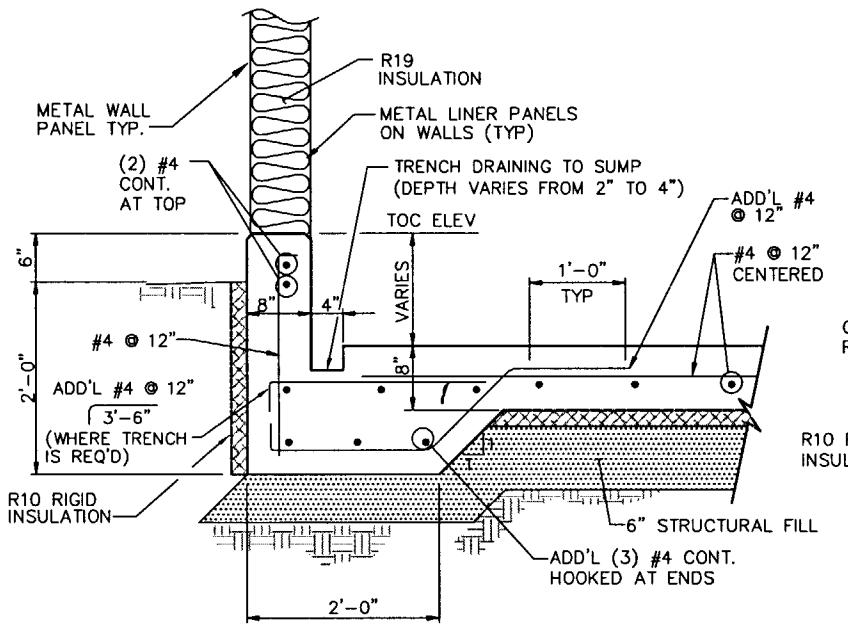

A AS-201 SECTION
1"=1'-0"
Scale In Feet

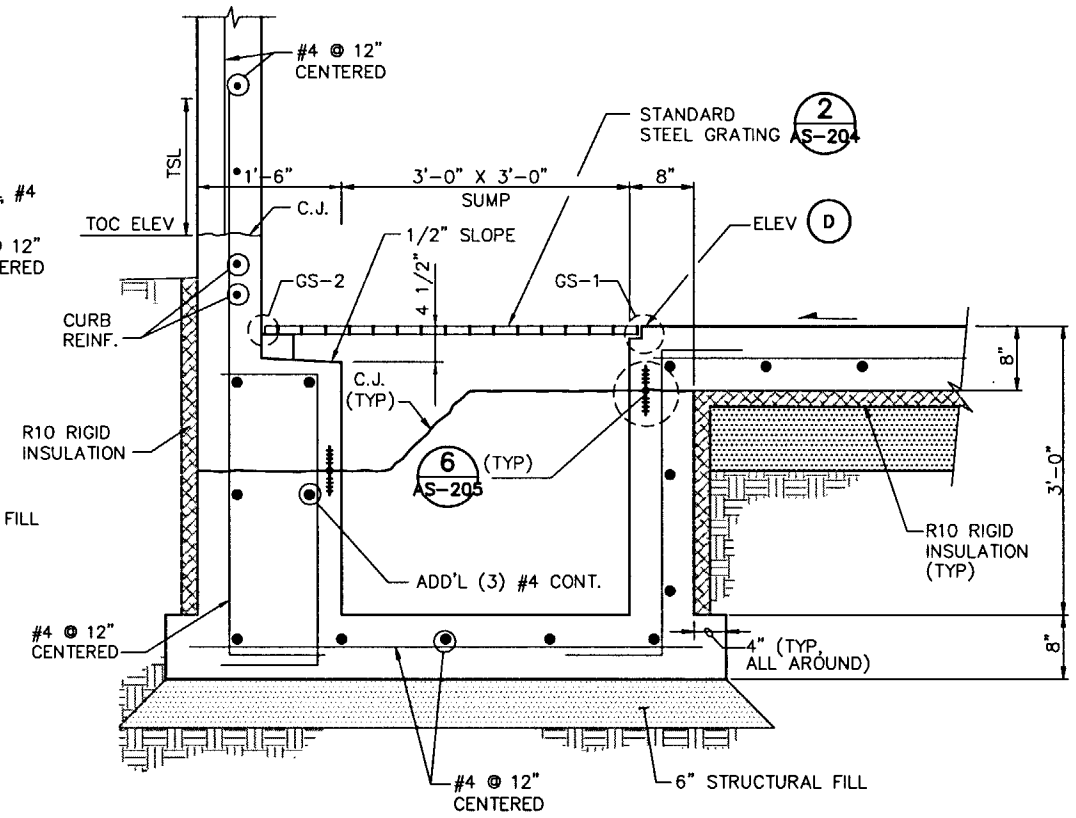

B AS-201 SECTION
1"=1'-0"
Scale In Feet

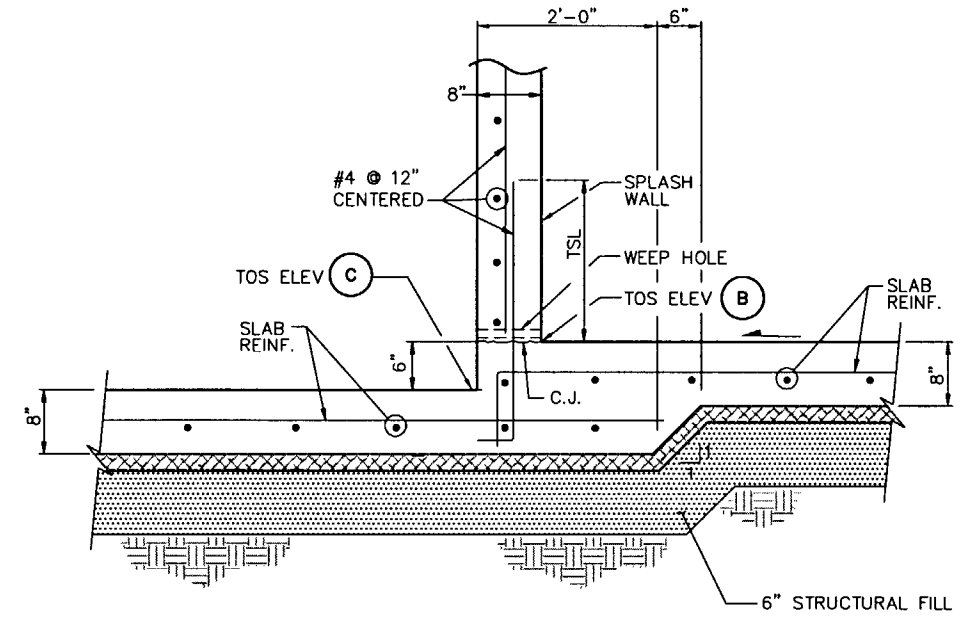

C AS-201 SECTION
1"=1'-0"
Scale In Feet

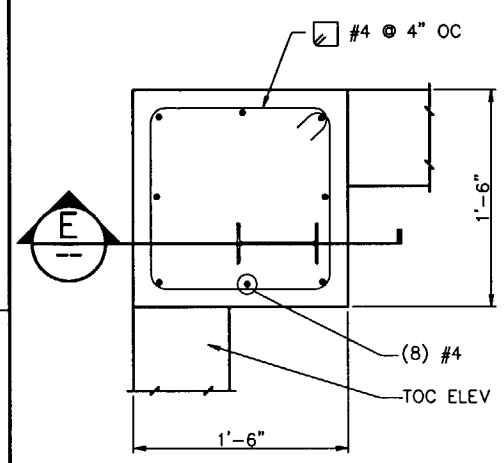

1 AS-201 DETAIL
1 1/2"=1'-0"

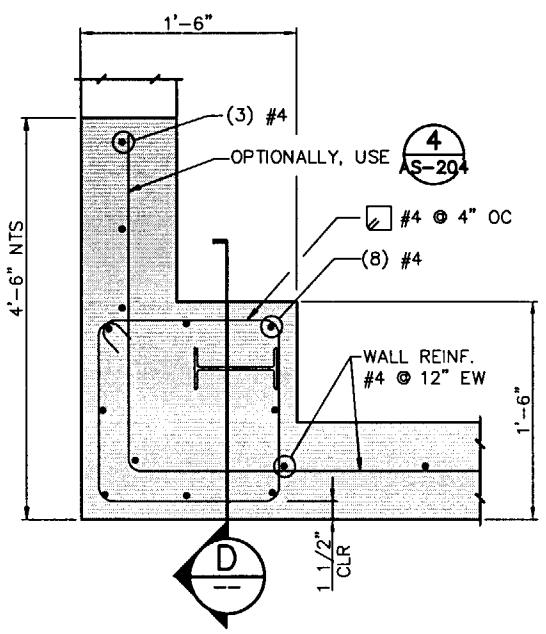

2 AS-201 DETAIL
1 1/2"=1'-0"

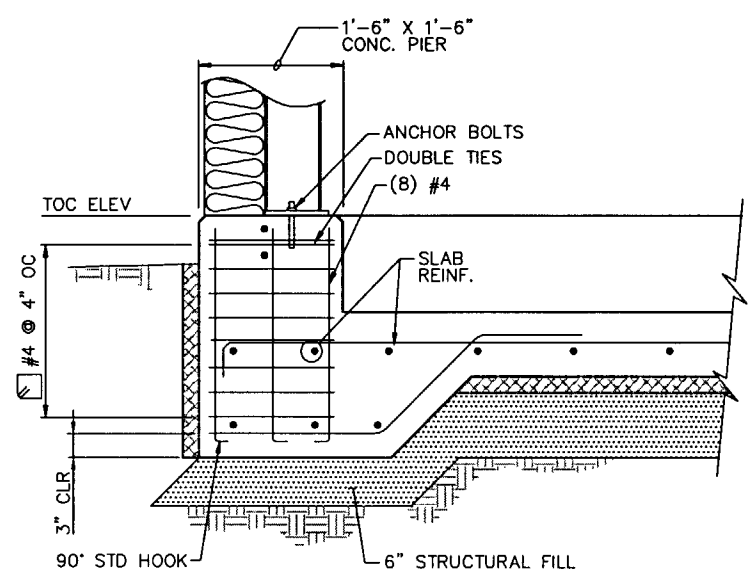

NOTE:
FOR ADD'L INFORMATION SEE SECTION A

E SECTION
1"=1'-0"
Scale In Feet

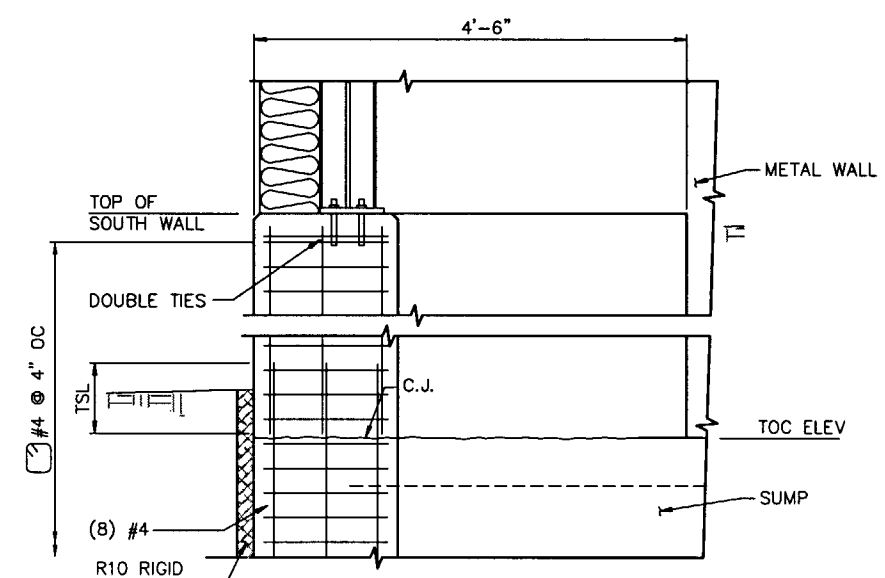

D SECTION
1"=1'-0"
Scale In Feet

NOTE:
FOR TENSION SLPLICE LENGTH (TSL) SEE 4 AS-204

INEEL Idaho National Engineering & Environmental Laboratory BECHTEL BWXT IDAHO, LLC

CH2MHILL MWH MONTGOMERY WATSON HARZA

INEEL CERCLA DISPOSAL FACILITY (ICDF)

CREST PAD BUILDING SECTIONS AND DETAILS

REGISTERED PROFESSIONAL ENGINEER STATE OF IDAHO KENT B SOELBERG 5-8-02

SUBCONTRACT NO.	S01-588058
PROJECTER:	
DESIGN:	S. DESPRADEL
DRAWN:	JOSH PRETS
PROJECT NO.	
SPEC CODE	
FOR REVIEW/APPROVAL SIGNATURES SEE DAR NO.	DAR
EFFECTIVE DATE:	

SIZE	CAGE CODE	INDEX CODE NUMBER AREA	TYPE	CL	ORIG	DWG-	REV
D		B21	0100	02			0

SCALE: AS SHOWN CPP SHEET AS-202

REVISIONS		
REV	DESCRIPTION	EFFECTIVE DATE:
0	APPROVED FOR CONSTRUCTION	14 MAY 2002

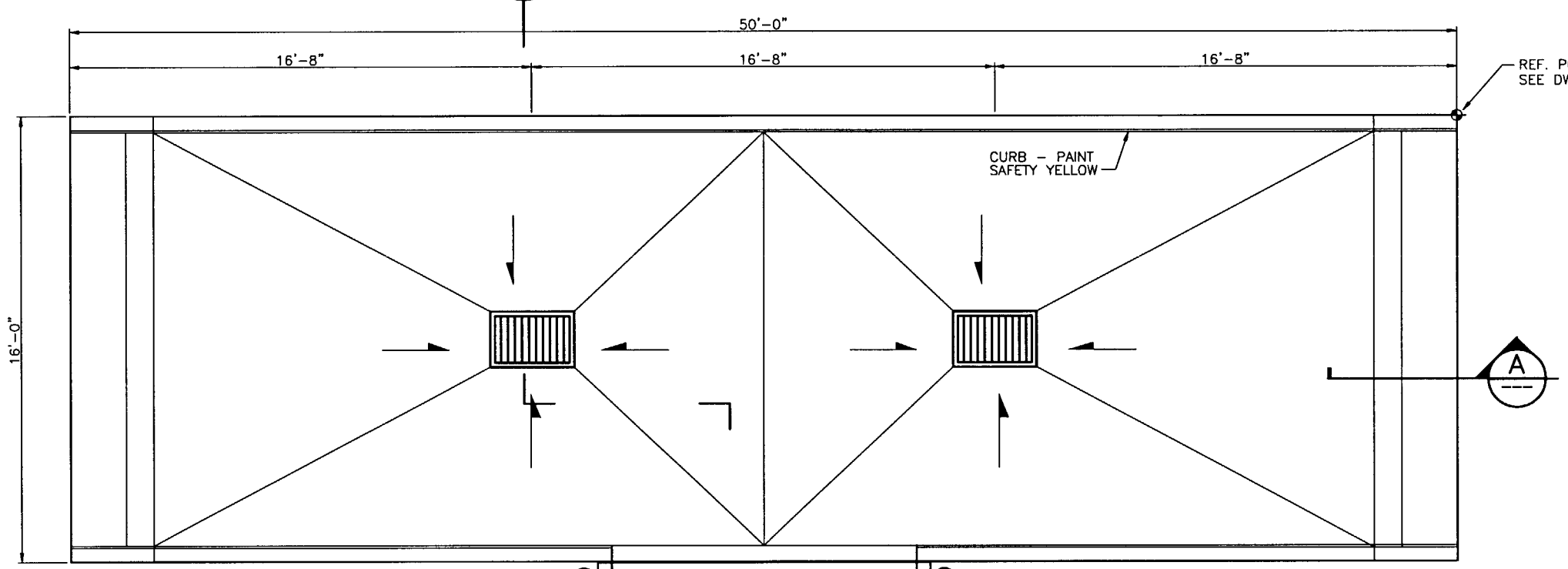

NOTES:

LOADS:

TRAFFIC LOAD: HS15-44 (AASHTO STANDARD CODE)

MATERIALS:

A. CONCRETE STRENGTH: MIN 4500 PSI COMPRESSIVE (CLASS 45) @ 28 DAYS
B. REINFORCING STEEL: ASTM 615, GRADE 60
C. PREMOLDED JOINT FILLER (PJF) SHALL BE BITUMINOUS TYPE (ASTM D994 OR D1751)

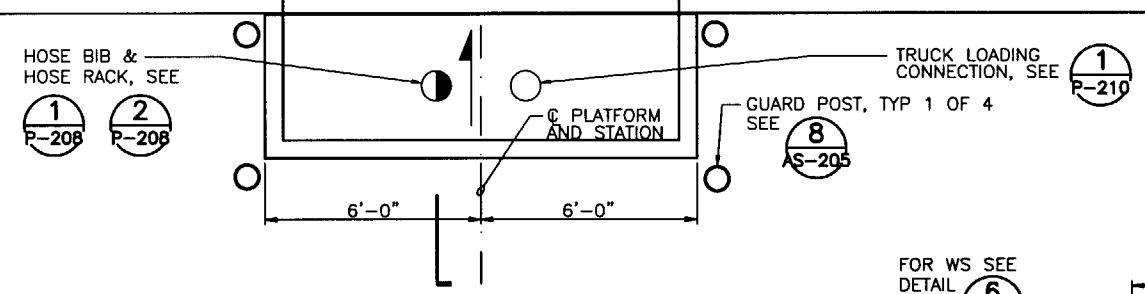

TRUCK LOADING STATION FOUNDATION

3/8" = 1'-0"

0 2 4 6
Scale In Feet

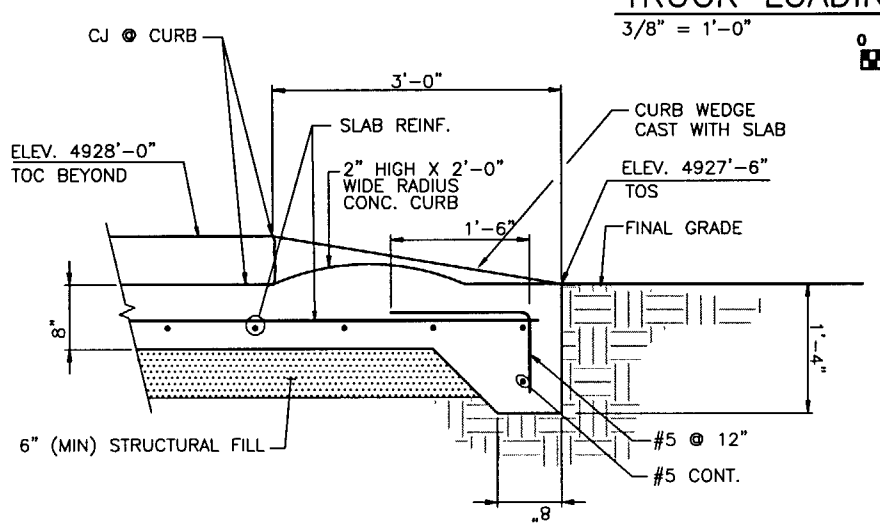

A SECTION

1/2"=1'-0"

0 1 2 3
Scale In Feet

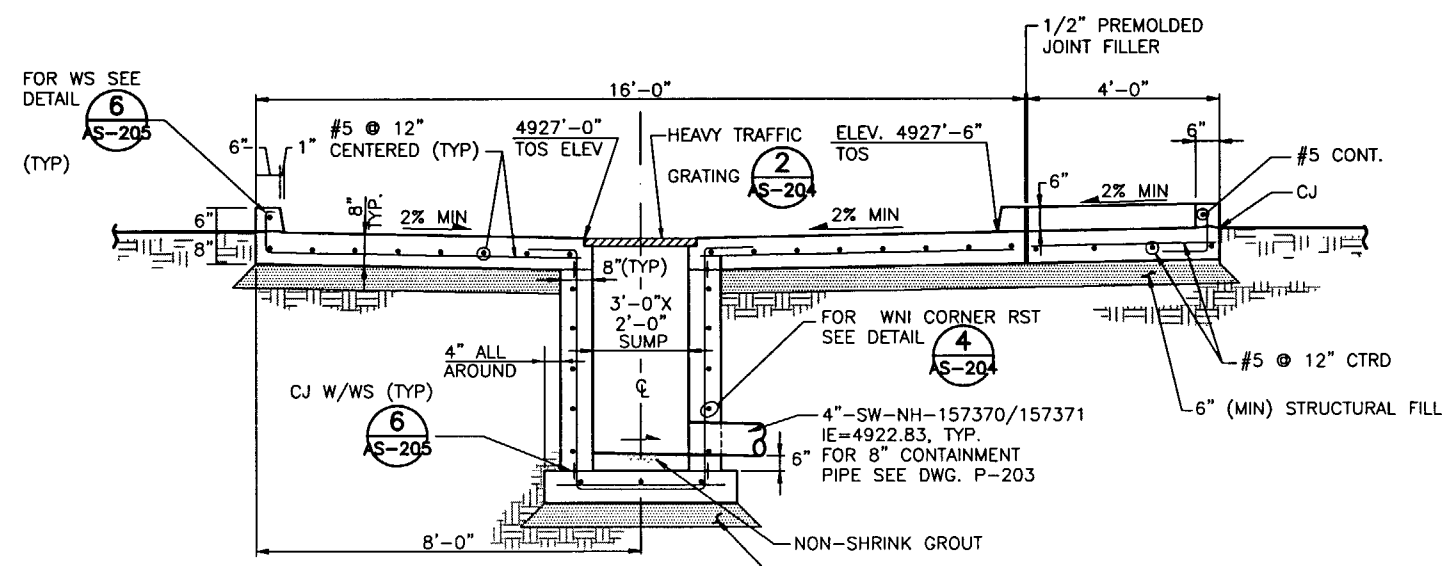

B SECTION

1/2"=1'-0"

0 1 2 3
Scale In Feet

REGISTERED PROFESSIONAL ENGINEER STATE OF IDAHO KENT B SOELBERG 5-8-02

SUBCONTRACT NO.	S01-588058
REQUESTER:	
DESIGN:	S. DESPRADEL
DRAWN:	JOSH PRETS
PROJECT NO.	
SPEC CODE	
FOR REVIEW/APPROVAL SIGNATURES SEE DAR NO.	DAR
EFFECTIVE DATE:	

INEEL — Idaho National Engineering & Environmental Laboratory — BECHTEL BWXT IDAHO, LLC

CH2MHILL — MWH MONTGOMERY WATSON HARZA

INEEL CERCLA DISPOSAL FACILITY (ICDF)

TRUCK LOADING PLAN
SECTIONS AND DETAILS

SIZE	CAGE CODE	INDEX CODE NUMBER AREA	TYPE	CL	ORIG	DWG-	REV
D		B21	0100	02			0

SCALE: AS SHOWN — CPP — SHEET AS-203

REVISIONS		
REV	DESCRIPTION	EFFECTIVE DATE:
0	APPROVED FOR CONSTRUCTION	14 MAY 2002

REINFORCING STEEL:

1. THE MINIMUM REINFORCING FOR ALL CONCRETE WALLS AND SLABS SHALL BE AS FOLLOWS:

WALL THICKNESS	REINF EACH WAY	LOCATION
6"	#4@12"	CENTERED
8"	#5@12"	CENTERED
10"	#4@12"	EACH FACE
12"	#5@12"	EACH FACE

PROVIDE LARGER SIZES AND MORE REINFORCING IN ALL SECTIONS OF CONCRETE WHERE REQUIRED BY THE DETAILS ON THE DRAWINGS OR BY THE SPECIFICATIONS.

2. CLEARANCE FOR REINFORCEMENT BARS, UNLESS SHOWN OTHERWISE, SHALL BE:
   - WHEN PLACED ON GROUND: ——— 3"
   - ALL OTHER CONCRETE SURFACES:
     - #5 BAR OR SMALLER ——— 1 1/2"
     - #6 BAR OR LARGER ——— 2"
3. REFER TO WALL CORNER AND WALL INTERSECTION REINFORCING DETAIL. IN GENERAL, THE WALL CORNER REINFORCING SIZES AND SPACINGS SHALL BE CALLED OUT ON THE PLANS AND REFERENCED TO THESE DETAILS AND THE TYPICAL HORIZONTAL WALL REINFORCING SHALL LAP WITH THE HORIZONTAL REINFORCING.
4. ALL BENDS, UNLESS OTHERWISE SHOWN, SHALL BE A 90 DEGREE STANDARD HOOK AS DEFINED IN LATEST EDITION OF ACI 318.
5. ALL WALL CORNER AND WALL INTERSECTION REINFORCEMENT BARS SHALL BE CONTINUOUS AROUND CORNERS AND THROUGH COLUMNS OR PILASTERS. REINFORCEMENT SHALL BE EXTENDED INTO CONNECTING WALLS AND LAPPED ON THE OPPOSITE FACE OF THE CONNECTING WALLS, AS INDICATED ELSEWHERE ON THIS SHEET.
6. VERTICAL WALL BARS SHALL BE LAPPED WITH DOWELS FROM BASE SLABS AND EXTENDED INTO THE TOP FACE OF ROOF SLABS AND LAPPED WITH TOP SLAB REINFORCEMENT. PROVIDE A MINIMUM OF TWO FULL HEIGHT VERTICAL BARS WITH MATCHING DOWELS AT WALL ENDS, CORNERS AND INTERSECTIONS WITH SIZE TO MATCH TYPICAL VERTICAL REINFORCING STEEL SHOWN OR REQUIRED BY NOTES ABOVE.
7. UNLESS INDICATED OTHERWISE, CONTRACTOR MAY SPLICE CONTINUOUS SLAB OR LONGITUDINAL BEAM BARS AT LOCATIONS OF HIS CHOOSING, EXCEPT THAT TOP BAR SPLICES SHALL BE LOCATED AT MIDSPAN AND BOTTOM BAR SPLICES HALL BE LOCATED AT SUPPORTS. ALL REINFORCEMENT BENDS AND LAPS, UNLESS OTHERWISE NOTED, SHALL SATISFY THE FOLLOWING MINIMUM REQUIREMENT:

CONCRETE DESIGN STRENGTH = 4,000 PSI						GRADE 60 REINFORCING STEEL				
BAR SIZE		#3	#4	#5	#6	#7	#8	#9	#10	#11
LAP SPLICE LENGTH										
SPACING<6"	TOP BAR*	1'-4"	2'-0"	3'-0"	4'-0"	5'-10"	6'-8"	7'-6"	8'-4"	9'-2"
	OTHER BAR	1'-4"	1'-7"	2'-3"	3'-1"	4'-6"	5'-2"	5'-10"	6'-5"	7'-1"
SPACING>6"	TOP BAR*	1'-4"	1'-7"	2'-0"	2'-5"	3'-6"	4'-0"	5'-0"	6'-0"	7'-1"
	OTHER BAR	1'-4"	1'-4"	1'-7"	1'-10"	2'-9"	3'-1"	3'-10"	4'-7"	5'-5"
EMBEDMENT LENGTH										
SPACING<6"	TOP BAR*	1'-0"	1'-7"	2'-3"	3'-1"	4'-6"	5'-2"	5'-10"	6'-5"	7'-1"
	OTHER BAR	1'-0"	1'-2"	1'-9"	2'-5"	3'-6"	4'-0"	4'-6"	5'-0"	5'-5"
SPACING>6"	TOP BAR*	1'-0"	1'-3"	1'-7"	1'-10"	2'-9"	3'-1"	3'-10"	4'-7"	5'-5"
	OTHER BAR	1'-0"	1'-0"	1'-2"	1'-5"	2'-1"	2'-5"	2'-11"	3'-7"	4'-2"

* TOP BARS SHALL BE DEFINED AS ANY HORIZONTAL BARS PLACED SUCH THAT MORE THAN 12" OF FRESH CONCRETE IS CAST IN THE MEMBER BELOW THE BAR IN ANY SINGLE POUR. HORIZONTAL WALL BARS ARE CONSIDERED TOP BARS.

8. CONTINUOUS WATERSTOP, AS SPECIFIED, SHALL BE INSTALLED IN ALL CONSTRUCTION JOINTS IN WALLS OF WATER HOLDING BASINS AND CHANNELS, EXCEPT WHERE INDICATED OTHERWISE.
9. PROVIDE AND INSTALL SELECT GRANULAR MATERIAL AS SPECIFIED UNDER ALL SLABS AND FOOTINGS TO UNDISTURBED EARTH WITH MINIMUM THICKNESS EQUAL TO 6", UNLESS OTHERWISE NOTED.

1 STRUCTURAL NOTES
NTS

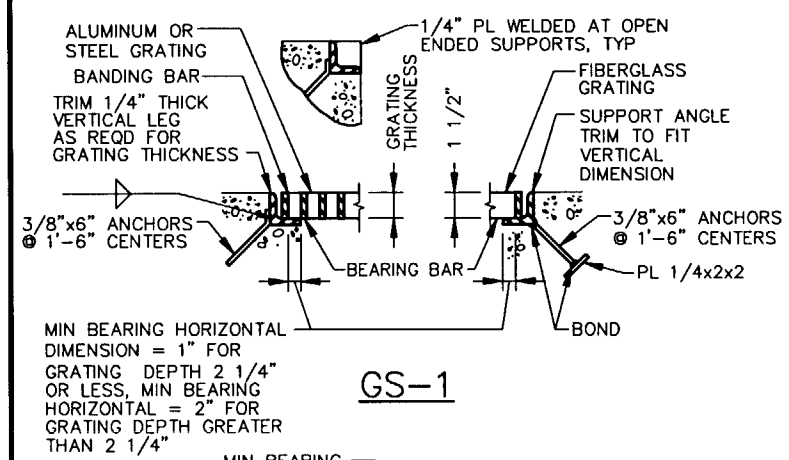

GS-1

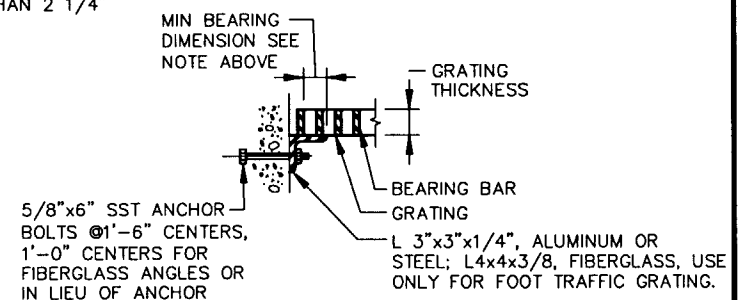

GS-2

VEHICULAR TRAFFIC NOTE:

STEEL GRATING BEARING BARS FOR VEHICULAR TRAFFIC SHALL BE SPACED AT 1 7/8" OC; ALUMINUM GRATING BEARING BARS FOR VEHICULAR TRAFFIC SHALL BE SPACED AT 1 3/16" OC.

GENERAL NOTES:

1. EXTEND GRATING CONTINUOUSLY OVER GATE GUIDES AND GATES.
2. NOTCH GRATING SUPPORTS AT GATES AS REQUIRED.
3. GRATING SPAN ←→ SEE PLAN.
4. WIDTH OF GRATING SECTIONS SHALL NOT EXCEED 3'-0".
5. SHOP DRAWINGS BASED ON FIELD DIMENSIONS SHALL BE SUBMITTED TO THE ENGINEER PRIOR TO FABRICATION.
6. MATERIAL FOR SUPPORTS OF STEEL AND ALUMINUM GRATING TO BE SAME AS GRATING, EXCEPT METAL SUPPORTS THAT ARE TO BE EMBEDDED IN CONCRETE SHALL BE TYPE 316 STAINLESS STEEL.
7. UNLESS NOTED OTHERWISE ON PLANS, GRATING THICKNESS SHALL BE AS TABULATED IN "GRATING THICKNESS TABLE" FOR APPLICABLE TRAFFIC.
8. BEARING BAR THICKNESS FOR GRATING TO BE 3/16" MINIMUM.
9. BAND ALL EDGES WITH 3/16 x DEPTH OF BEARING BAR.
10. PROVIDE MISCELLANEOUS GRATING FASTENERS AS REQUIRED.
11. TYPE OF MATERIAL USED SHALL BE AS SHOWN ON PLANS OR AS SPECIFIED. THIS STANDARD DETAIL INCLUDES 3 TYPES, ALTHOUGH ALL 3 MAY NOT BE INCLUDED IN PROJECT.
12. THE HORIZONTAL CLEARANCE BETWEEN THE GRATING AND GRATING SUPPORTS SHALL NOT BE LESS THAN 1/4" NOR GREATER THAN 1/2" AND AS SPECIFIED.
13. ALL GRATING SECTIONS, WHEN IN PLACE, SHALL ALWAYS BE FIRMLY ANCHORED TO THEIR SUPPORTS AS SPECIFIED.

FOOT TRAFFIC GRATING THICKNESS TABLE			
MAXIMUM SPAN	ALUMINUM	STEEL	FIBERGLASS
3'-6"	1 1/4"	1"	1 1/2"

HEAVY TRAFFIC (HS 20-44)		
MAXIMUM SPAN	STEEL	ALUMINUM
1'-0"	2"x3/16"	DO NOT USE ALUMINUM GRATING
1'-8"	2 1/2"x1/4"	
2'-0"	2 1/2"x3/8" OR 3"x1/4"	
2'-6"	3"x3/8" OR 4"x1/4"	
3'-3"	3 1/2"x3/8"	
4'-0"	4"x3/8"	
5'-0"	4 1/2"x3/8"	

2 STANDARD GRATING
NTS

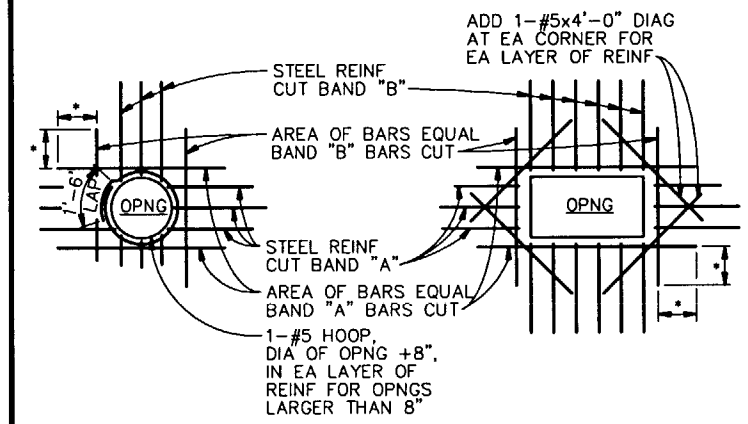

NOTES:

1. * PROVIDE MINIMUM LAP, SEE 1/AS-204
2. TYPICAL FOR ALL OPENINGS IN CONCRETE WALLS AND SLABS UNLESS INDICATED OTHERWISE ON PLANS.
3. DO NOT WELD REINFORCEMENT TO PIPE SLEEVES AND INSERTS.
4. PROVIDE A MINIMUM OF 2 "A" BARS AND 2 "B" BARS EACH SIDE OF OPENING (1 EACH FACE).
5. FOR OPENINGS LARGER THAN 8'-0", REINFORCE SAME AS FOR 8'-0" OPENINGS.
6. SPACE AT 3 BAR DIAMETERS (OR 3" MINIMUM) ON CENTER.

3 OPENING REINFORCING
NTS

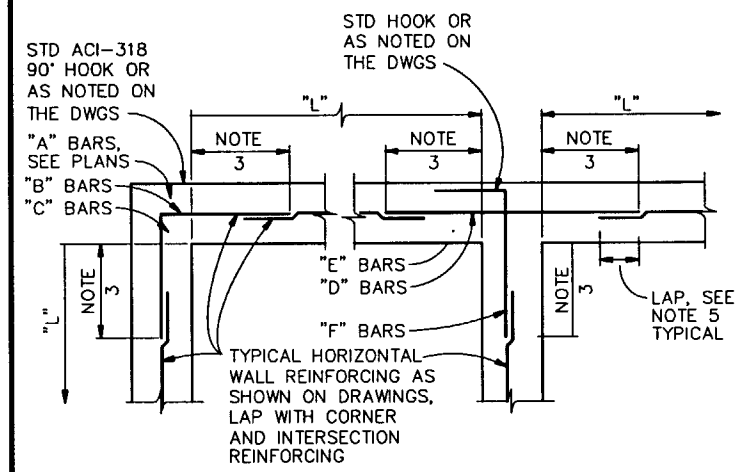

NOTES:

1. TYPICAL HORIZONTAL WALL CORNER AND INTERSECTION REINFORCING LAYOUT IS SHOWN TO AVOID CONGESTION AND PERMIT PROPER PLACEMENT, FOR SIZE AND SPACING SEE PLANS. ALL HORIZONTAL REINFORCING AT CORNERS AND INTERSECTIONS SHALL BE FABRICATED AND INSTALLED WITH SPLICES LOCATED WHERE SHOWN REGARDLESS OF BAR SIZE AND SPACING.
2. WHERE THE CORNER OR INTERSECTION REINFORCING SIZE AND SPACING IS NOT SHOWN, NOTED OR TABULATED ON THE PLANS, THE SIZE AND SPACING SHALL BE THE SAME AS THE WALL HORIZONTAL REINFORCING SHOWN ON THE WALL SECTIONS OR AS NOTED FOR THE REINFORCING BETWEEN THE CORNERS OR INTERSECTIONS.
3. EXCEPT WHERE OTHERWISE SHOWN ON THE DRAWINGS, THE LENGTH INDICATED AS "NOTE 3" SHALL BE THE LESSER OF L/4, 10 FEET, OR 1.0 TIMES THE HEIGHT OF THE WALL, EXCEPT THAT IN NO CASE SHALL IT BE LESS THAN 2 FEET.
4. L = LENGTH OF WALL PARALLEL TO THE BAR LENGTH IN QUESTION.
5. EXCEPT WHERE OTHERWISE SHOWN ON THE DRAWINGS, THE LENGTH INDICATED AS "NOTE 5" SHALL BE EQUAL TO ONE "LAP LENGTH" AS REQUIRED BY THE GENERAL STRUCTURAL NOTES. USE THE LAP LENGTH AS REQUIRED FOR THE SMALLER OF THE TWO REINFORCING BARS BEING SPLICED.
6. UNLESS OTHERWISE NOTED, "B" AND "C" BARS ARE THE SAME SIZE AND SPACING AND "F" BARS ARE THE SAME SIZE AND SPACING.

4 TYPICAL WALL CORNER AND INTERSECTION REINFORCING
NTS

REGISTERED PROFESSIONAL ENGINEER STATE OF IDAHO KENT B SOELBERG 5-8-02

SUBCONTRACT NO.	S01-588058
RECORDER:	
DESIGN:	S. DESPRADEL
DRAWN:	JOSH PRETS
PROJECT NO.	
SPEC CODE	
FOR REVIEW/APPROVAL SIGNATURES SEE DAR NO.	DAR
EFFECTIVE DATE:	

INEEL Idaho National Engineering & Environmental Laboratory BECHTEL BWXT IDAHO, LLC

CH2MHILL MWH MONTGOMERY WATSON HARZA

INEEL CERCLA DISPOSAL FACILITY (ICDF)

STRUCTURAL NOTES AND DETAILS

SIZE	CAGE CODE	INDEX CODE NUMBER AREA	TYPE	CL	ORG	DWG-	REV
D		B21	0100	02			0

SCALE: AS SHOWN CPP SHEET AS-204

REVISIONS		
REV	DESCRIPTION	EFFECTIVE DATE:
0	APPROVED FOR CONSTRUCTION	14 MAY 2002

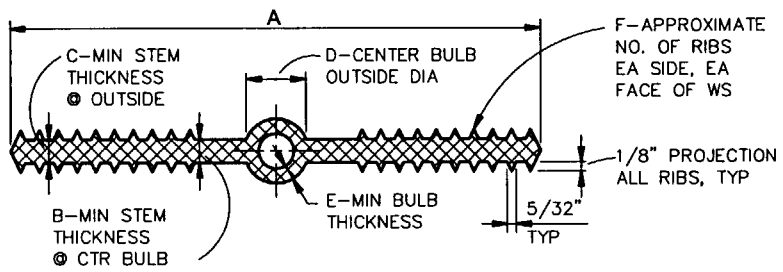

SIZE	A	B	C	D	E	F
6"x3/8"	6"	3/8"	3/8"	7/8"	1/4"	6

5 PLASTIC WATERSTOP
NTS

EQUIPMENT BASE NOTES

1. PAD SIZE SHALL BE MINIMUM INDICATED OR AS SHOWN ON THE PLANS OR AS INDICATED BY THE MANUFACTURER AND APPROVED BY THE ENGINEER.
2. THE SIZE, NUMBER, TYPE, LOCATION, AND THREAD PROJECTION OF THE ANCHOR BOLTS SHALL BE DETERMINED BY THE EQUIPMENT MANUFACTURER, AND SHALL BE AS APPROVED BY THE ENGINEER. ANCHOR BOLTS SHALL BE HELD IN POSITION WITH A ONE PIECE TEMPLATE, MATCHING THE BASE PLATE, WHILE PAD IS BEING POURED.
3. ANCHOR BOLT SLEEVES SHALL BE USED TO PROVIDE THE ANCHOR BOLT A MINIMUM MOVEMENT OF 1/2" IN ALL DIRECTIONS. THE MINIMUM SLEEVE LENGTH SHALL BE 8 TIMES THE BOLT DIAMETER. SLEEVES SHALL BE FILLED WITH NON–SHRINK GROUT.
4. ANCHOR BOLT SLEEVES SHALL HAVE A MINIMUM INTERNAL DIAMETER 1" GREATER THAN BOLT DIAMETER AND A MAXIMUM INTERNAL DIAMETER 3" GREATER THAN ANCHOR BOLT DIAMETER. SLEEVES SHALL BE FILLED WITH NON–SHRINK GROUT.
5. EQUIPMENT BASES SHALL BE INSTALLED LEVEL UNLESS SPECIFIED OTHERWISE.
6. WEDGES OR SHIMS SHALL BE USED TO SUPPORT THE BASE WHILE THE NON–SHRINK GROUT IS PLACED. TEMPORARY LEVELING NUTS SHALL BE BACKED OFF. IF LEFT IN, THE WEDGES OR SHIMS SHALL NOT BE EXPOSED TO VIEW.
7. HEIGHT OF PADS SHALL BE MINIMUM REQUIRED FOR ANCHOR BOLT CLEARANCE TO KEEP ANCHOR BOLT OUT OF SLAB (SEE TABLE BELOW). WHERE EQUIPMENT OR PIPING ELEVATION REQUIRE A PAD HEIGHT LESS THAN THE MINIMUM SHOWN, USE TYPE B WITH BLOCKOUT.

AB DIA * (IN.)	1/2	5/8	3/4	7/8	1	1 1/4
MIN PAD HT (IN.)	7	8 1/2	10	11	12 1/2	15
MIN EMBED (IN.)	4	4 1/2	5	6	7	9
EDGE DIST (IN.)	3	3 3/4	4 1/2	5 1/4	6	7 1/2
SPACING (IN.)	6	7 1/2	9	10 1/2	12	15
TENSION ** (LBS)	950	1500	2250	2550	3250	4000
SHEAR ** (LBS)	1250	2750	3560	4050	4500	5800

* ASSUME A307 QUALITY OR BETTER
** ASSUME f'c = 4000 PSI

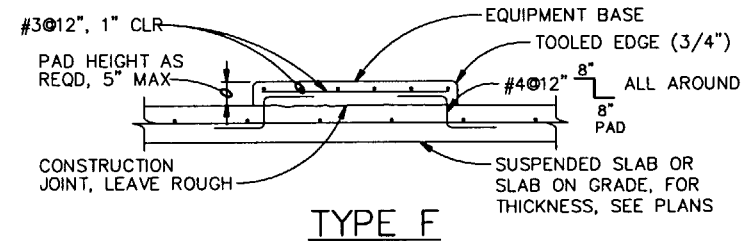

TYPE F

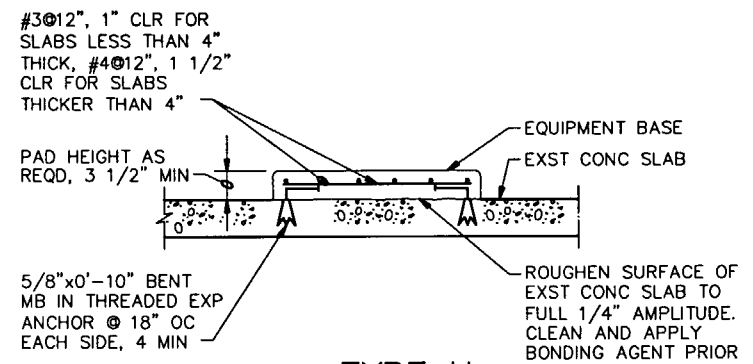

TYPE H

NOTES:

1. BONDING AGENT–TYPE AS RECOMMENDED FOR THIS APPLICATION, AS MANUFACTURED BY W.R. GRACE CO., SIKA CHEMICAL CORPORATION OR ADHESIVE ENGINEERING COMPANY.
2. EXPANSION ANCHORS–SELF DRILLING, SNAP–OFF OR FLUSH TYPE AS MANUFACTURED BY I.T.T. PHILLIPS DRILL DIVISION, OR HILTI HDI DROP–IN ANCHORS, OR EQUAL.
3. EQUIPMENT BASE SHALL BE INSTALLED LEVEL.
4. PAD SIZE SHALL BE AS INDICATED OR SHOWN ON THE PLANS. WHERE SIZE IS NOT INDICATED OR SHOWN, PAD SIZE SHALL BE DETERMINED BY THE EQUIPMENT SUPPLIER.
5. WHEN ANCHORAGE OF EQUIPMENT TO CONCRETE IS REQUIRED, USE SST WEDGE ANCHORS SPECIFIED.

7 EQUIPMENT PAD
NTS

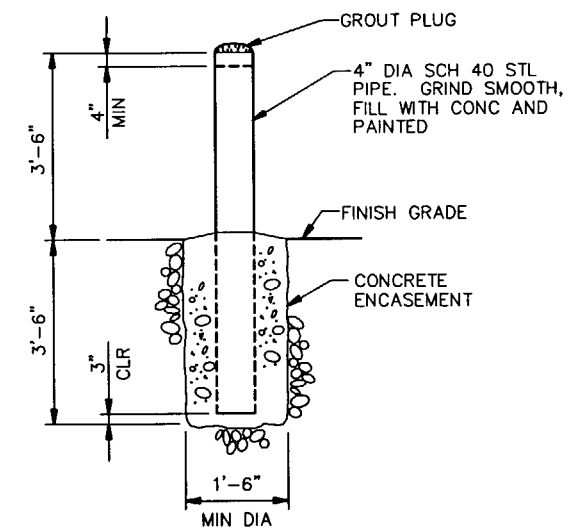

8 EXTERIOR GUARD POST
NTS

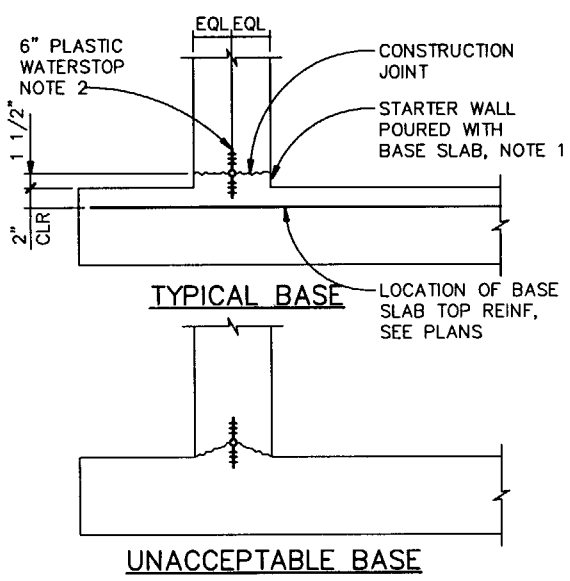

TYPICAL BASE

UNACCEPTABLE BASE

NOTES:

1. STARTER WALL REQUIRED FOR ALL CONSTRUCTION JOINTS WITH WATERSTOPS, UNLESS SPECIFICALLY INDICATED OTHERWISE.
2. SECURE WATERSTOP IN–PLACE AS SPECIFIED.

6 WALL BASE CONSTRUCTION JOINT
NTS

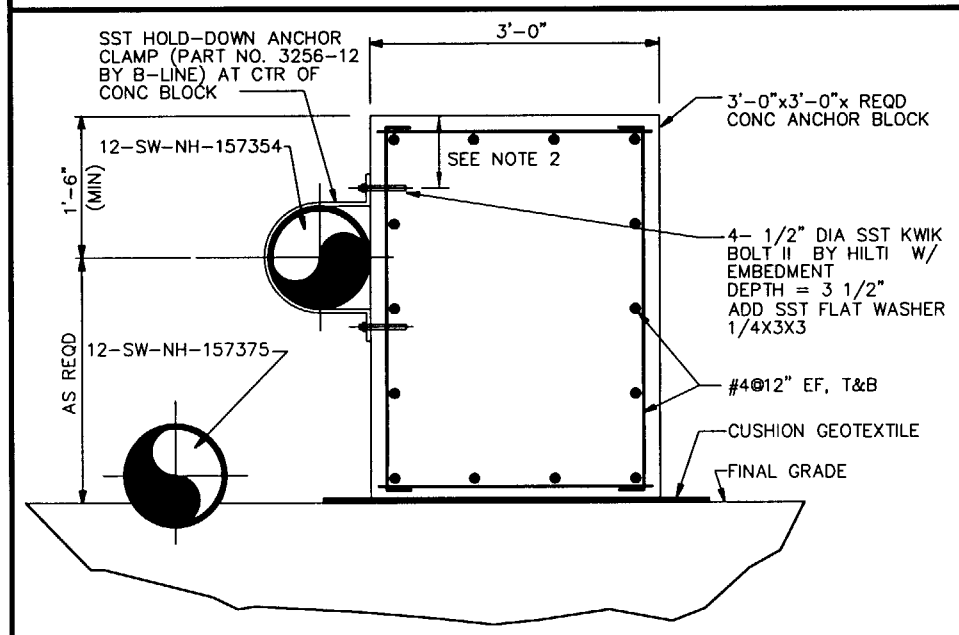

SECTION 9 / P–206
1"=1'–0"

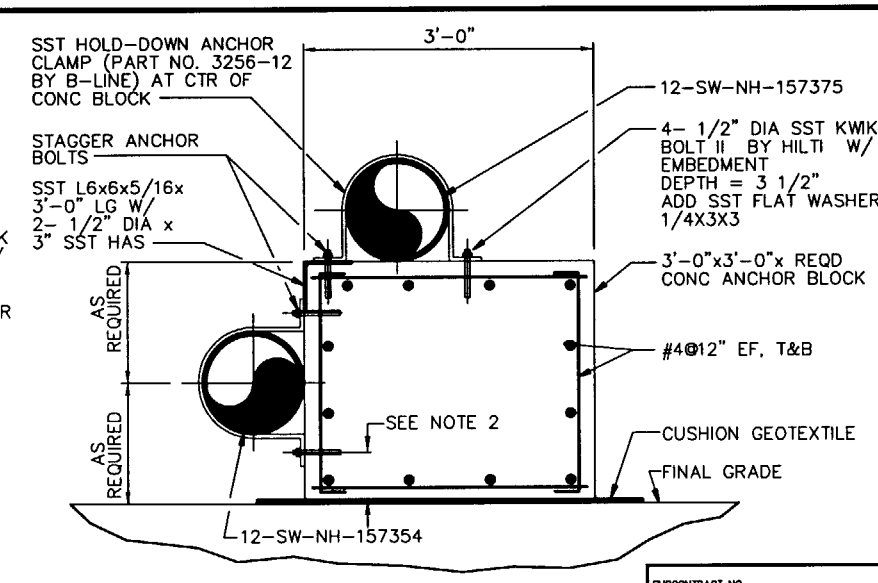

SECTION 10 / P–206
1"=1'–0"

NOTES:

1. HEADED ANCHOR STUDS (HAS) SHALL BE ASTM F593, ANSI TYPE 316, CONDITION CW MANUFACTURERS: NELSON STUD WELDING, FABRISTEEL CO., ELYRIA, OH. STUD WELDING ASSOCIATES INC., ELYRIA, OH.
2. MINIMUM EDGE DISTANCE = 4"

REGISTERED PROFESSIONAL ENGINEER STATE OF IDAHO KENT B SOELBERG 5-8-02

SUBCONTRACT NO.	S01–588058
REQUESTER:	
DESIGN:	S. DESPRADEL
DRAWN:	JOSH PRETS
PROJECT NO.	
SPEC CODE	
FOR REVIEW/APPROVAL SIGNATURES SEE DAR NO.	DAR
EFFECTIVE DATE:	

INEEL (Idaho National Engineering & Environmental Laboratory) BECHTEL BWXT IDAHO, LLC

CH2MHILL MWH MONTGOMERY WATSON HARZA

INEEL CERCLA DISPOSAL FACILITY (ICDF)

STRUCTURAL STANDARD DETAILS

SIZE	CAGE CODE	INDEX CODE NUMBER AREA	TYPE	CL	ORIG	DWG–	REV
D		B21	0100	02			0

SCALE: AS SHOWN CPP SHEET AS–205

FMT-01-REV 3.3

PAGE:

REVISIONS		
REV	DESCRIPTION	EFFECTIVE DATE:
0	APPROVED FOR CONSTRUCTION	14 MAY 2002

NOTES:

1. FOR CONDUIT ROUTING AND CABLE SIZE, SEE SUPPLEMENT #3 CONDUIT AND CABLE SCHEDULE ATTACHED TO SPECIFICATION 16005 ELECTRICAL.
2. PROVIDE AND INSTALL CONDUIT SEALS FOR C086 AND C053 AT EVAPORATION CREST PAD BUILDING ENTRANCE.
3. ROLL INTO 1X4 DUCT BANK:
   [C001, C005, C007, C003] FROM EVAP BUILDING
   [C002, C006, C008, C004] FROM LANDFILL BUILDING.
4. ROLL DUCT BANK FROM EVAP BUILDING UNDER DUCT BANK FROM LANDFILL TO FORM A 2X4 DUCT BANK.
   [C001, C005, C007, C003]
   [C002, C006, C008, C004]

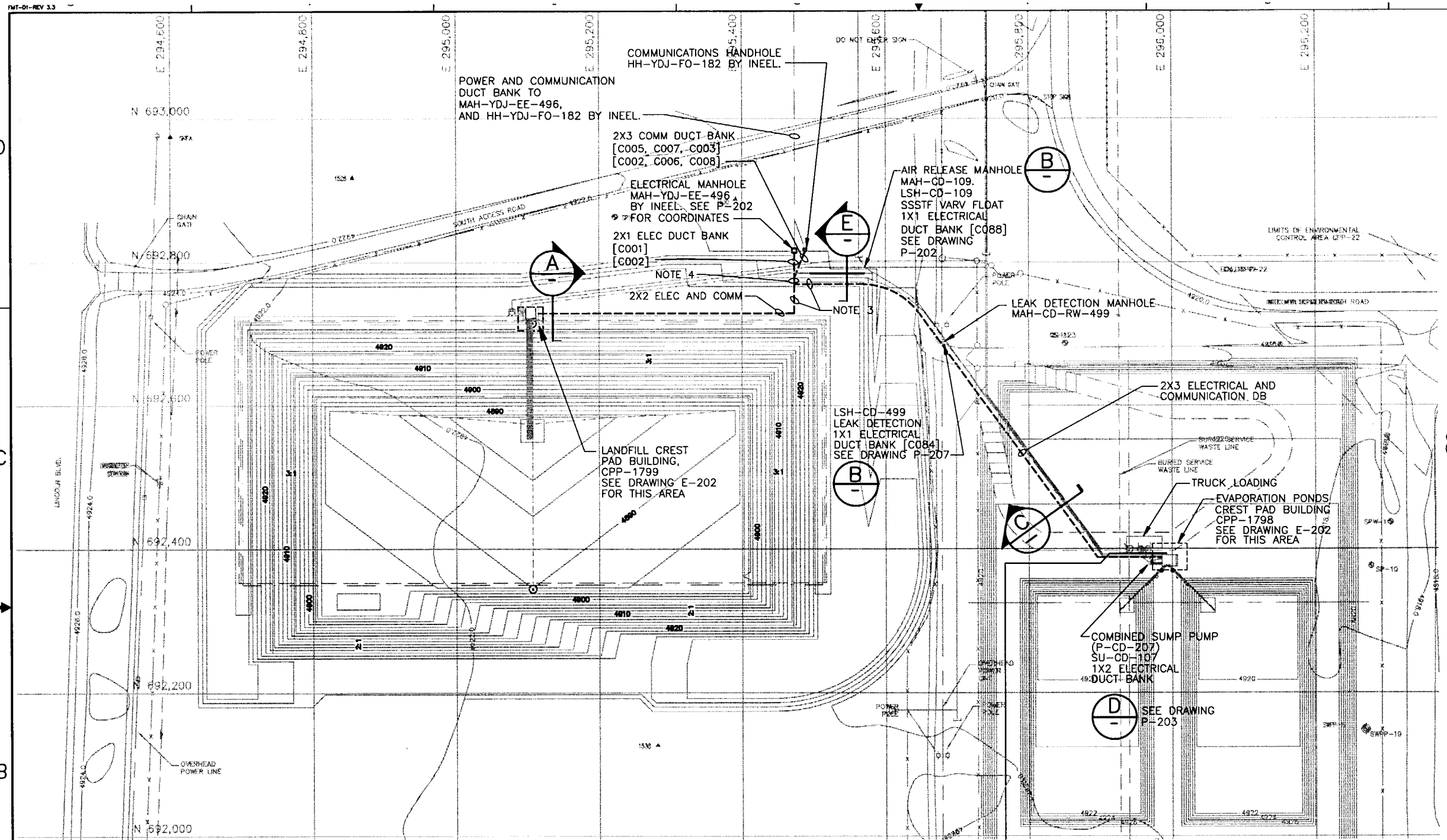

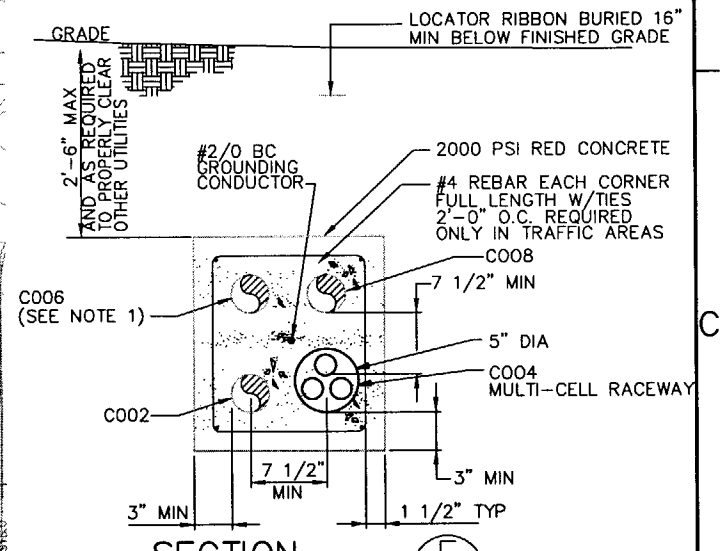

SECTION E
NTS

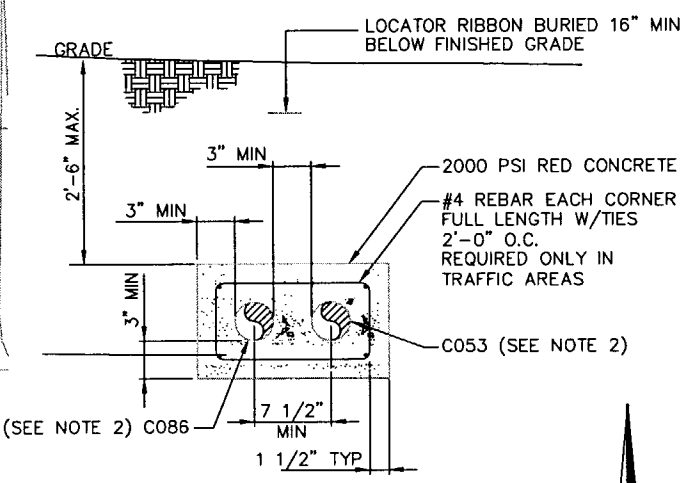

SECTION D
NTS
- , P-203

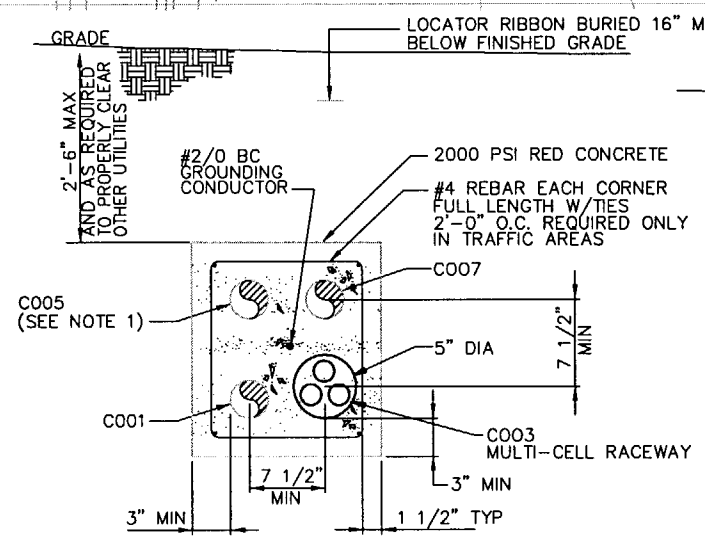

SECTION A
NTS

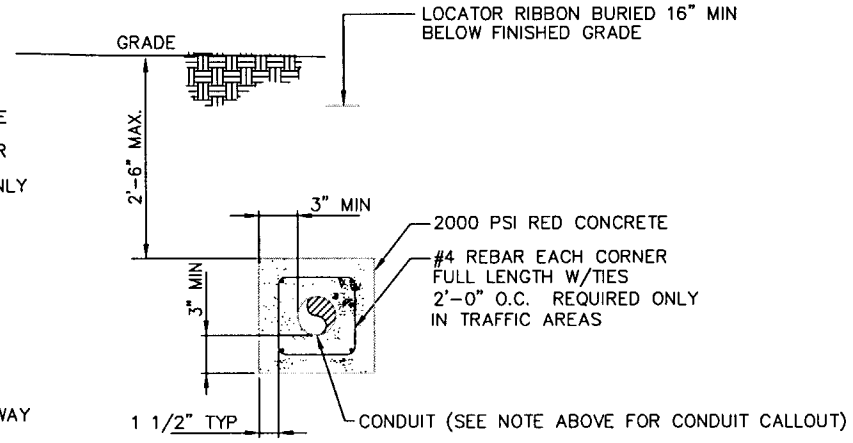

SECTION B
NTS

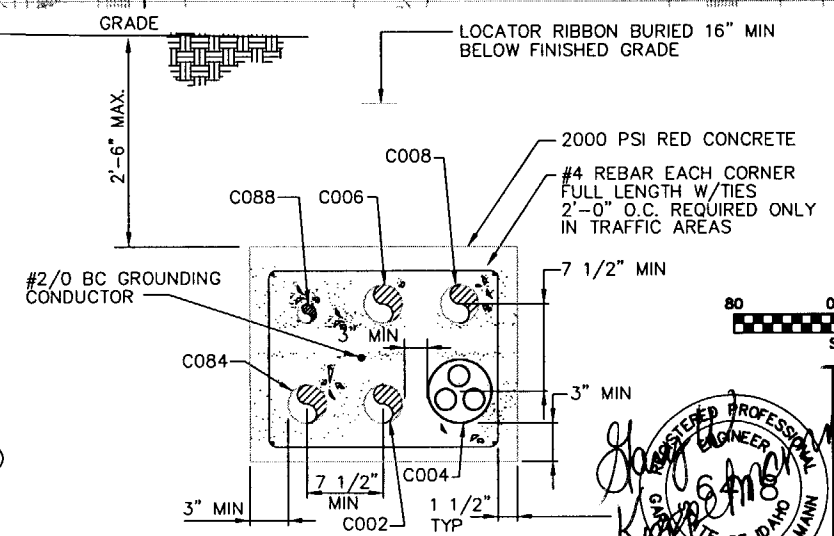

SECTION C
NTS

80 0 80 160
Scale In Feet

REGISTERED PROFESSIONAL ENGINEER STATE OF IDAHO WILLIAM KOPPELMANN 050802

SUBCONTRACT NO.	S01-588058
REQUESTER:	
DESIGN:	L G FOX
DRAWN:	V A MAXEY-SUHR
PROJECT NO.	
SPEC CODE	
FOR REVIEW/APPROVAL SIGNATURES SEE DAR NO.	DAR
EFFECTIVE DATE:	

INEEL Idaho National Engineering & Environmental Laboratory BECHTEL BWXT IDAHO, LLC

CH2MHILL MWH MONTGOMERY WATSON HARZA

INEEL CERCLA DISPOSAL FACILITY (ICDF)

OVERALL ELECTRICAL SITE PLAN

SIZE	CAGE CODE	INDEX CODE NUMBER (AREA / TYPE / CL / ORG)	DWG-	REV
D		B21 / 0200 / 50	CPP	0
SCALE: AS SHOWN			SHEET	E-201

REVISIONS		
REV	DESCRIPTION	EFFECTIVE DATE:
0	APPROVED FOR CONSTRUCTION	14 MAY 2002

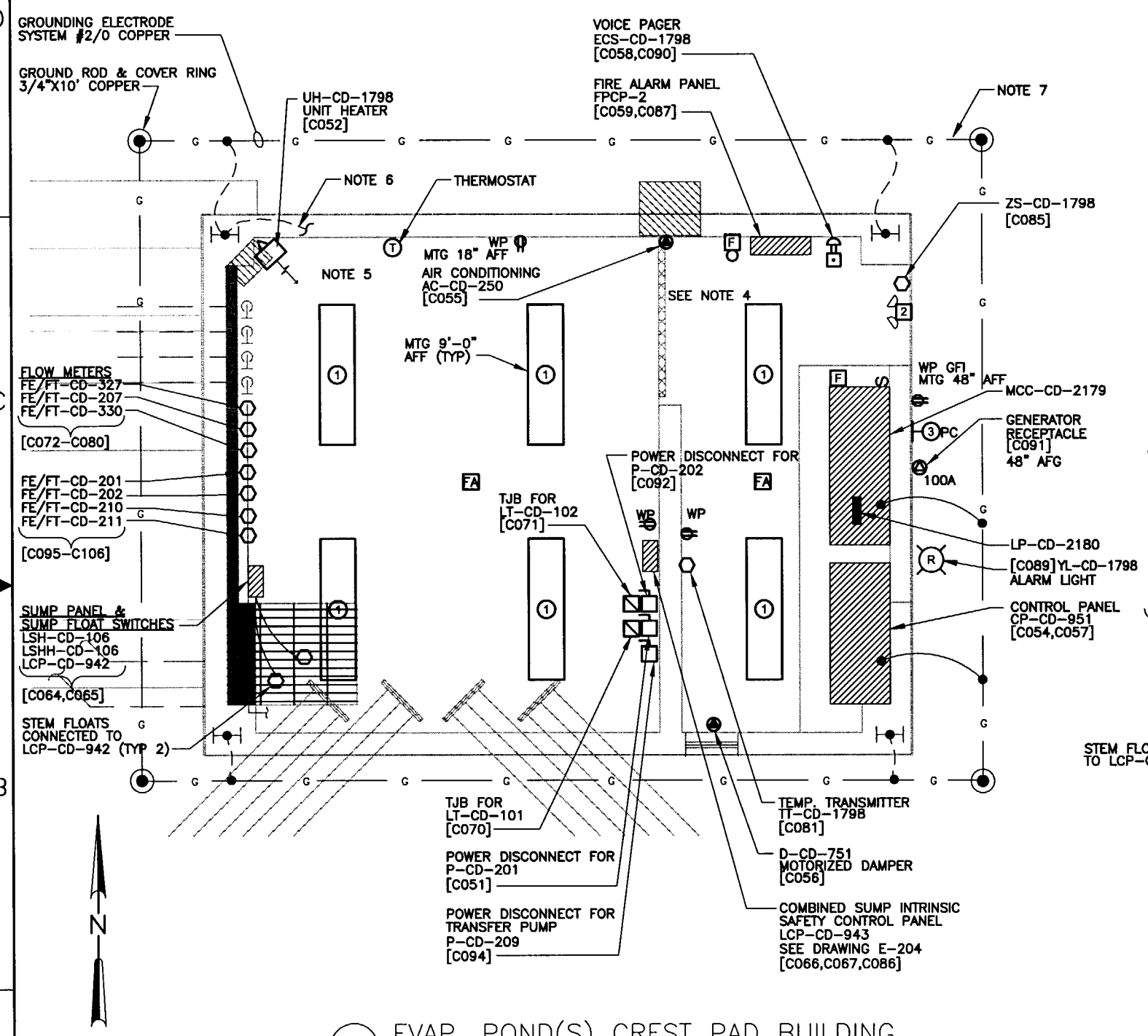

C4 EVAP. POND(S) CREST PAD BUILDING
1/2" = 1'-0"

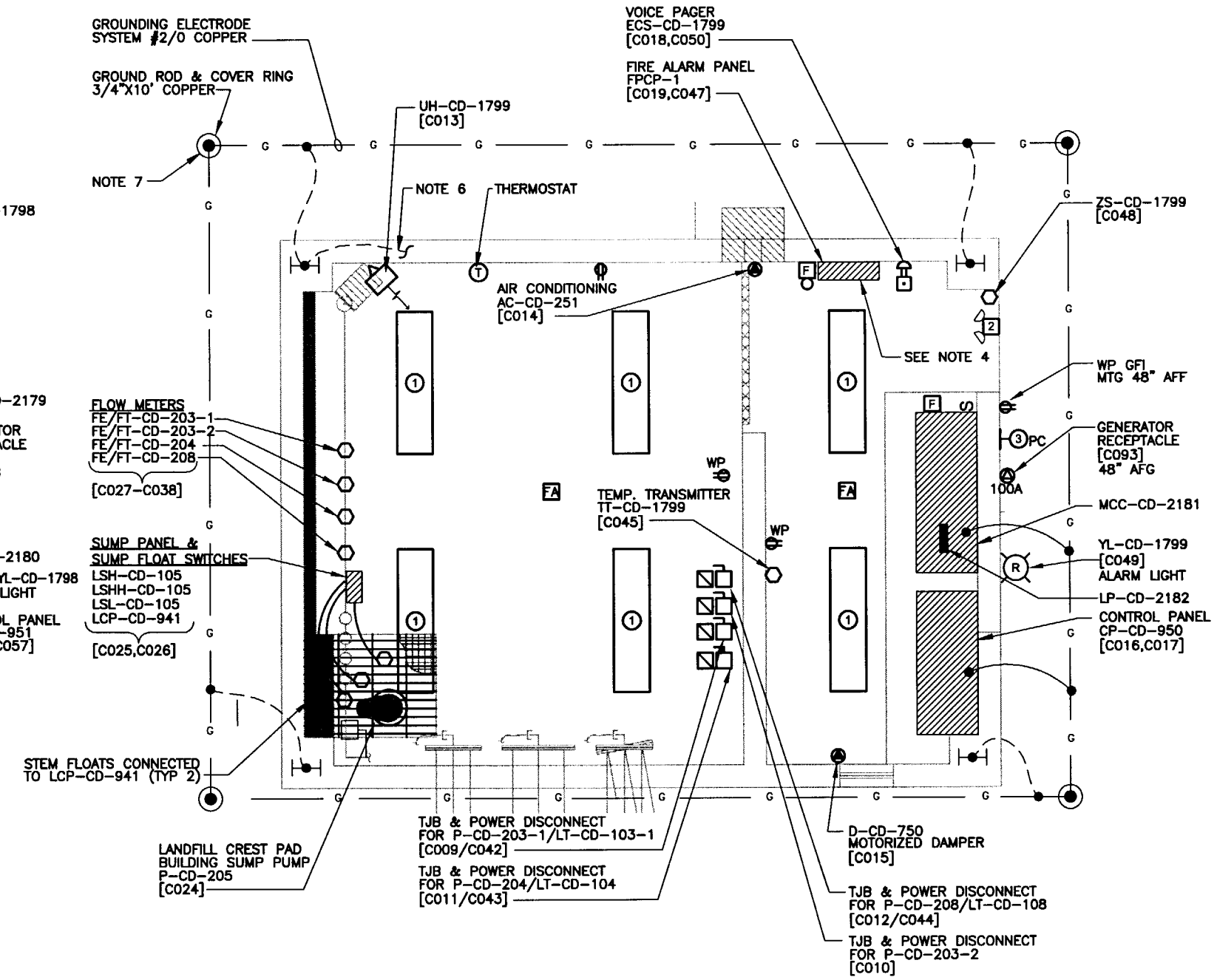

LANDFILL CREST PAD BUILDING
1/2" = 1'-0"

NOTES:

1. FOR CONDUIT ROUTING AND CABLE SIZE, SEE SUPPLEMENT #3 CONDUIT AND CABLE SCHEDULE ATTACHED TO SPECIFICATION 16005 ELECTRICAL.
2. FOR LUMINAIRE INFORMATION, SEE SUPPLEMENT #1 LUMINAIRE SCHEDULE ATTACHED TO SPECIFICATION 16005 ELECTRICAL.
3. FOR EQUIPMENT POWER INFORMATION SEE SUPPLEMENT#2 PANEL SCHEDULE ATTACHED TO SPECIFICATION 16005 ELECTRICAL.
4. FOR FIRE ALARM ROUTING AND CABLING, SEE DRAWING E-204.
5. PROVIDE SUPPORTS FOR PUMP AND INSTRUMENT CABLES USING STRUT SYSTEM BRACKETS AND CHANNELS ATTACHED TO CONCRETE WALLS.
6. COORDINATE W/CONCRETE CONTRACTOR TO INSURE CONTINUITY OF REBAR AND BOND TO GROUNDING SYSTEM TO FORM UNDERGROUND.
7. USE CHEMICAL ENHANSMENT MATERIAL TO OBTAIN SATISFACTORY GROUND.

0 2 4 6
1/2"=1'-0"

REGISTERED PROFESSIONAL ENGINEER 6418 STATE OF IDAHO GARY WILLIAM KOPPELMANN

SUBCONTRACT NO.	S01-588058
REQUESTER:	
DESIGN:	L G FOX
DRAWN:	V A MAXEY-SUHR
PROJECT NO.	
SPEC CODE	
FOR REVIEW/APPROVAL SIGNATURES SEE DAR NO.	DAR
EFFECTIVE DATE:	

INEEL Idaho National Engineering & Environmental Laboratory BECHTEL BWXT IDAHO, LLC

CH2MHILL MWH MONTGOMERY WATSON HARZA

INEEL CERCLA DISPOSAL FACILITY (ICDF)

CREST PAD BUILDINGS
ELECTRICAL POWER AND LIGHTING PLAN

SIZE	CAGE CODE	INDEX CODE NUMBER				DWG-	REV
		AREA	TYPE	CL	ORIG		
D		B21	0100	02			0

SCALE: AS SHOWN CPP SHEET E-202

REVISIONS		
REV	DESCRIPTION	EFFECTIVE DATE:
0	APPROVED FOR CONSTRUCTION	14 MAY 2002

NOTES:

1. INEEL SHALL PROVIDE 480V, 3-PHASE, 3 WIRE FEEDER TO MANHOLE MAH-YDJ-EE-496. CONTRACTOR SHALL PROVIDE FEEDER TAPS AND ROUTE ADDITIONAL POWER CABLES TO RESPECTIVE CREST PAD BUILDING MOTOR CONTROL CENTERS.
2. INEEL SHALL PROVIDE MAIN BREAKER OR FUSED DEVICE IN EXISTING SWITCHGEAR TO ADEQUATELY PROTECT, START AND OPERATE CONNECTED MOTOR LOADS PER NEC 430-62.
3. MOTOR CONTROL CENTER LAYOUT IS FOR GENERAL GUIDANCE ONLY.
4. PROVIDE MOTOR CONTROL FOR 208V, 3 PHASE, 4 WIRE HVAC EQUIPMENT OPERATION. POWER SHALL COME FROM RESPECTIVE LIGHTING PANEL, AFTER MCC INSTALLATION AT CREST PAD BUILDINGS.
5. ALL CIRCUIT BREAKERS ARE 3-POLE UNLESS IDENTIFIED OTHERWISE.
6. INTERLOCK MAIN BREAKER(S) WITH GENERATOR BREAKER(S).
7. PROVIDE AND INSTALL CONDUIT SEALS.

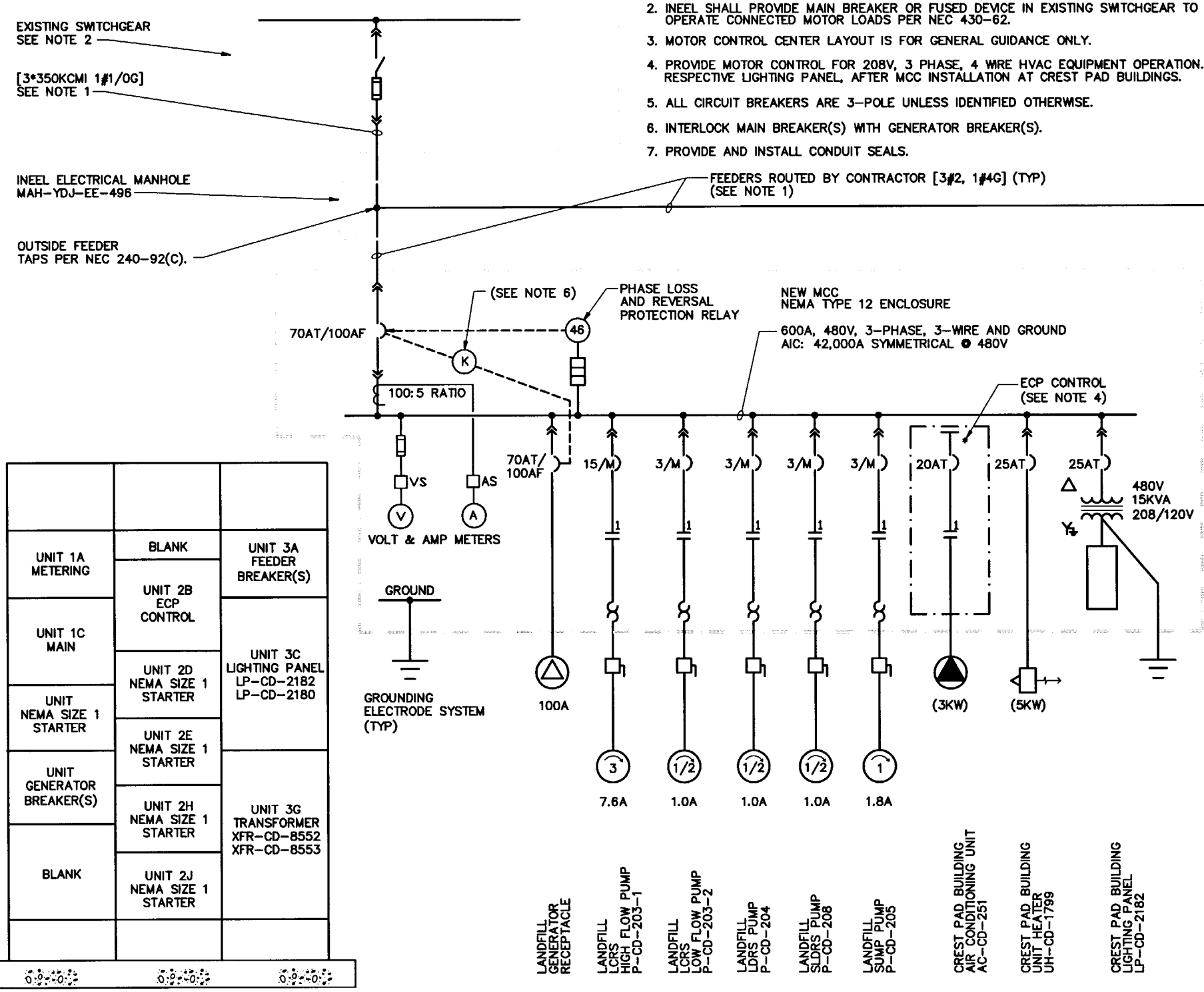

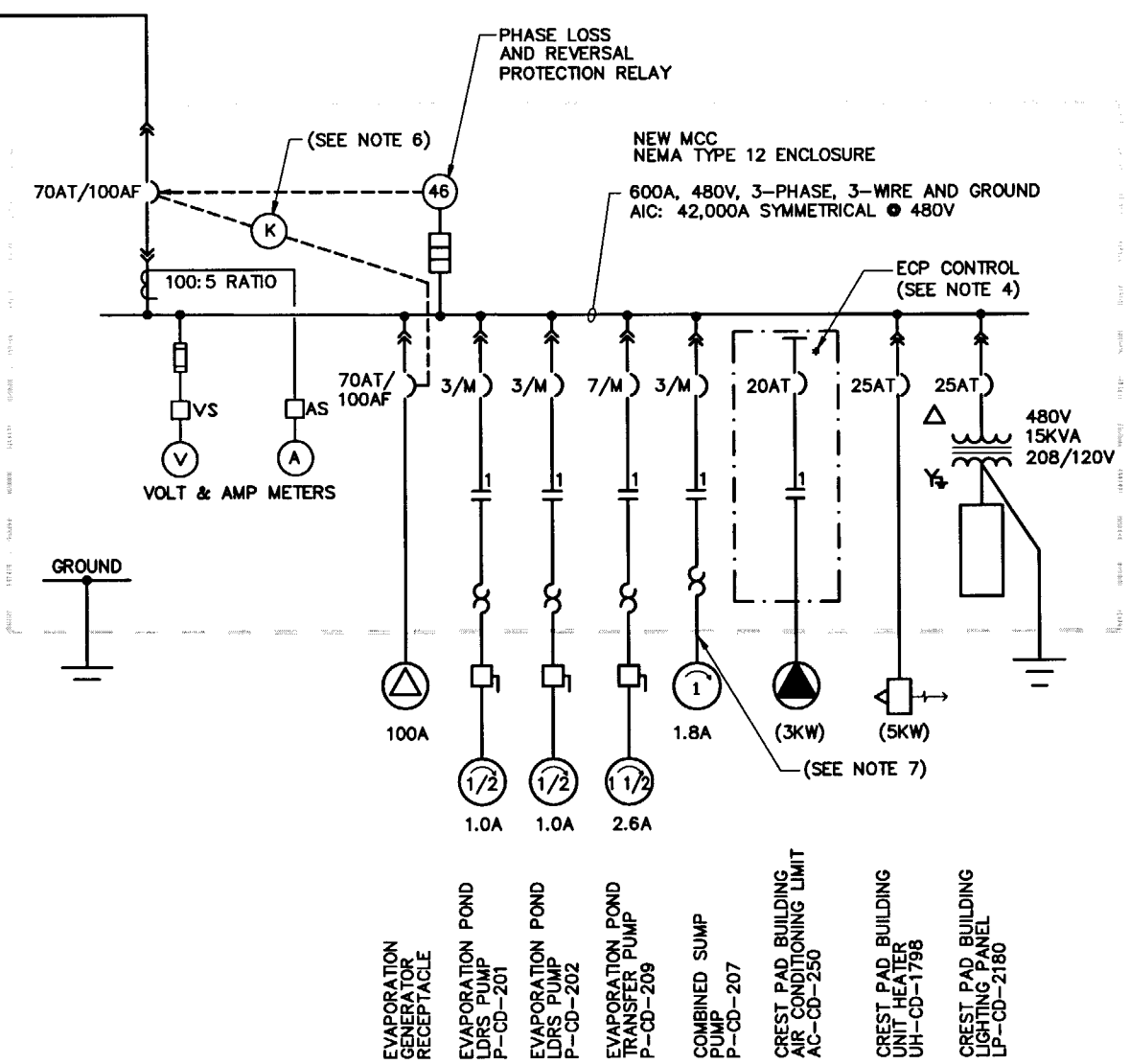

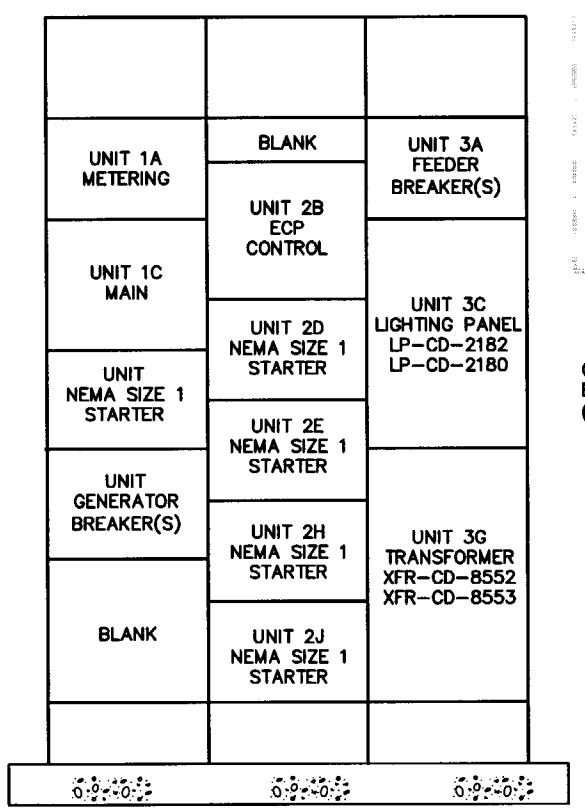

MCC-CD-2179 LAYOUT
MCC-CD-2180 LAYOUT
NTS

LANDFILL
CREST PAD BUILDING ELECTRICAL ONE-LINE DIAGRAM
NTS

EVAPORATION POND(S) CREST PAD BUILDING
ELECTRICAL ONE-LINE DIAGRAM
NTS

SUBCONTRACT NO.	S01-588058
REQUESTER:	
DESIGN:	L G FOX
DRAWN:	V A MAXEY-SUHR
PROJECT NO.	
SPEC CODE	
FOR REVIEW/APPROVAL SIGNATURES SEE DAR NO.	DAR
EFFECTIVE DATE:	

REGISTERED PROFESSIONAL ENGINEER GARY WILLIAM KOPPELMANN STATE OF IDAHO 9318

050802

INEEL Idaho National Engineering & Environmental Laboratory BECHTEL BWXT IDAHO, LLC

CH2MHILL MWH MONTGOMERY WATSON HARZA

INEEL CERCLA DISPOSAL FACILITY (ICDF)

ELECTRICAL ONE-LINE DIAGRAM AND MCC ELEVATIONS

SIZE	CAGE CODE	INDEX CODE NUMBER AREA	TYPE	CL	ORIG	DWG-	REV
D		B21	9999	02			0

SCALE: NONE CPP SHEET E-203

REVISIONS		
REV	DESCRIPTION	EFFECTIVE DATE:
0	APPROVED FOR CONSTRUCTION	14 MAY 2002

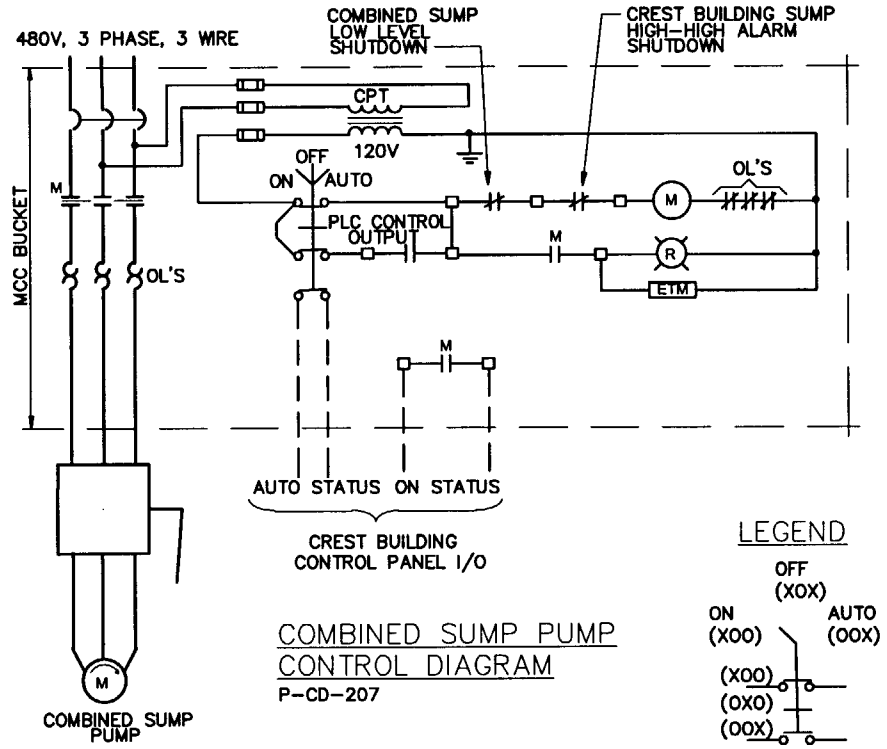

COMBINED SUMP PUMP CONTROL DIAGRAM
P-CD-207

LEGEND

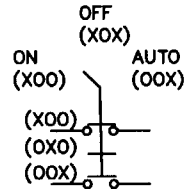

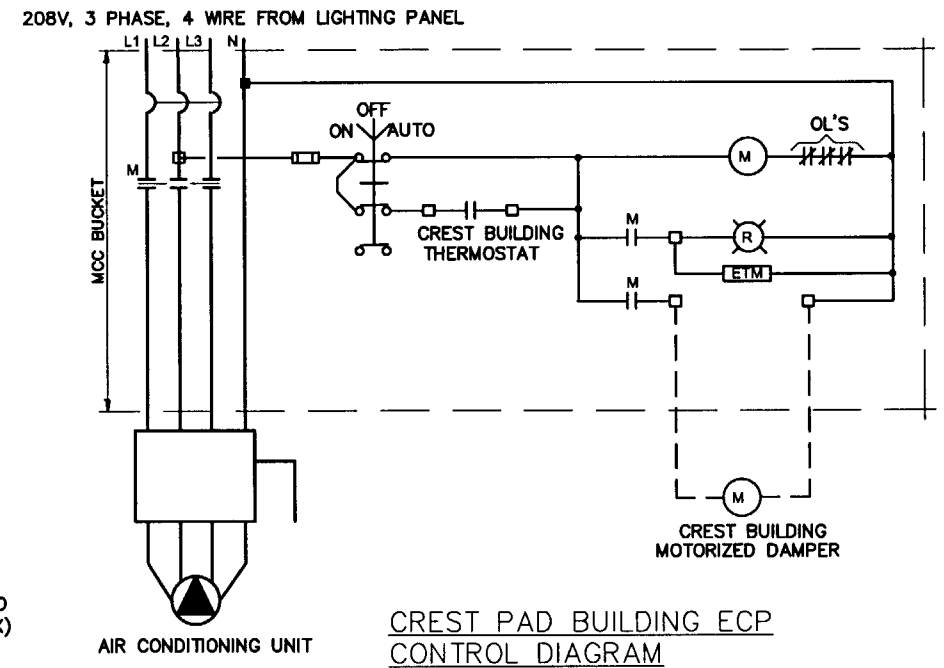

CREST PAD BUILDING ECP CONTROL DIAGRAM
AC-CD-250, AC-CD-251

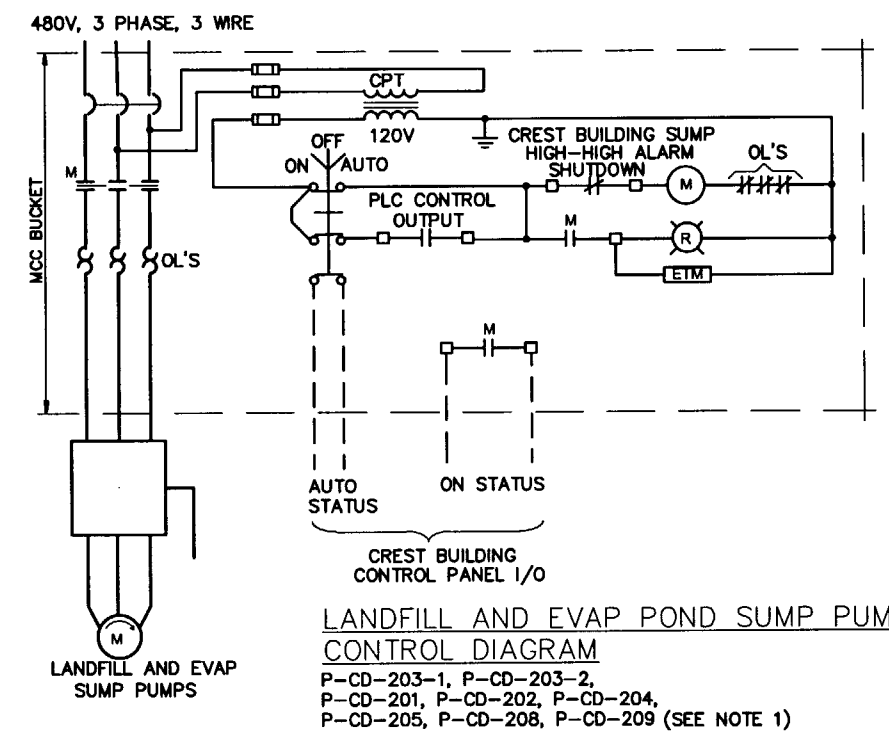

LANDFILL AND EVAP POND SUMP PUMPS CONTROL DIAGRAM
P-CD-203-1, P-CD-203-2,
P-CD-201, P-CD-202, P-CD-204,
P-CD-205, P-CD-208, P-CD-209 (SEE NOTE 1)

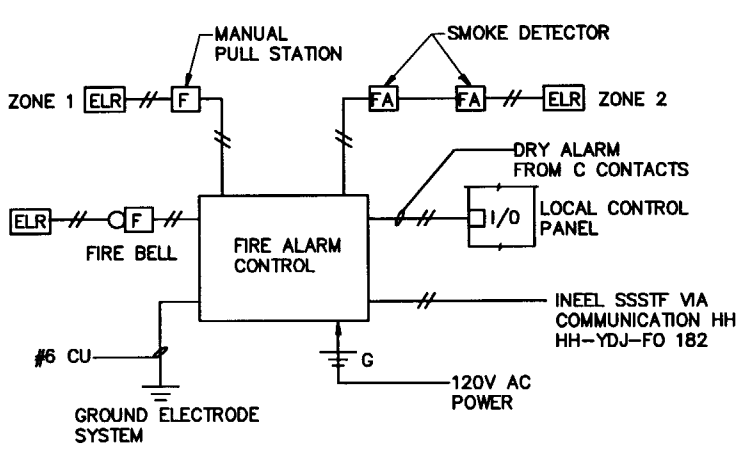

CREST PAD BUILDING FIRE ALARM SYSTEM (TYP 2)
FPCP-1, FPCP-2

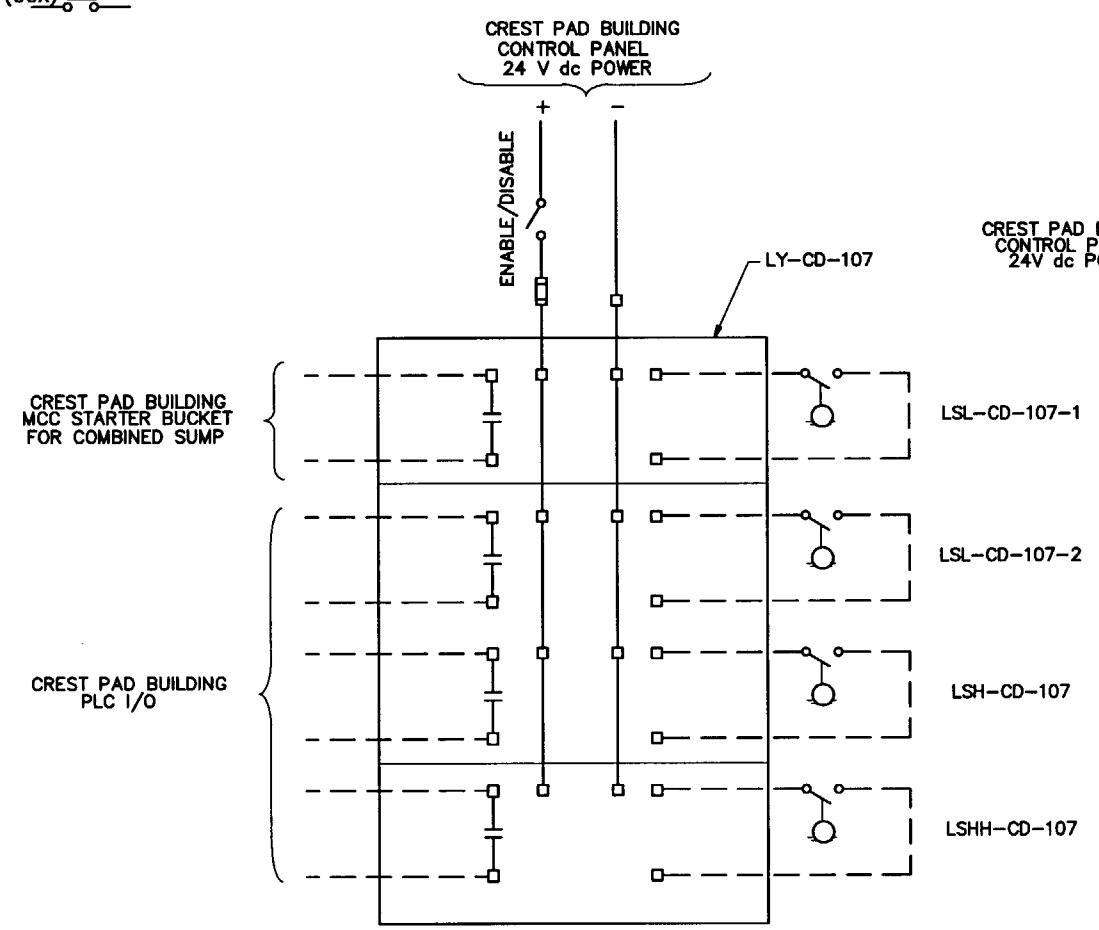

COMBINED SUMP INTRINSIC SAFETY CONTROL DIAGRAM
LCP-CD-943

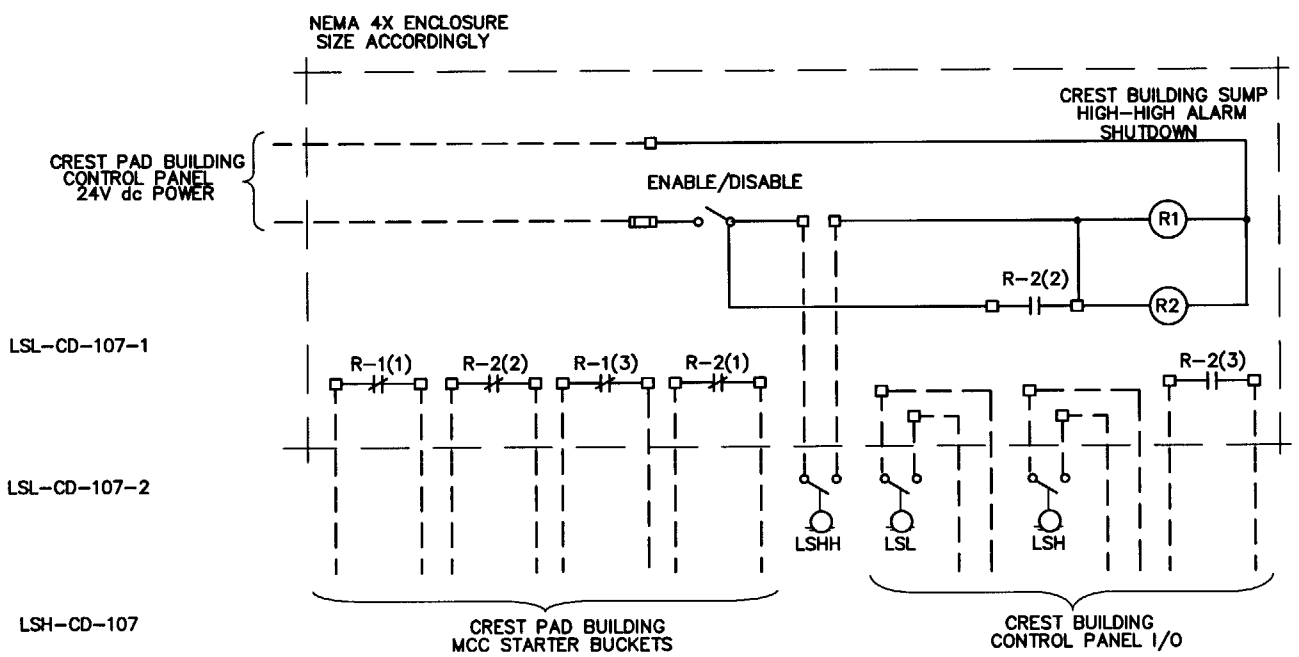

CREST PAD BUILDING SUMPS HIGH LEVEL ALARM CONTROL DIAGRAM
LCP-CD-941, LCP-CD-942
(SEE NOTE 2)

NOTES:

1. NO PLC CONTROL FOR P-CD-209.
2. NO LSL CONNECTION IN LCP-CD-942.

REGISTERED PROFESSIONAL ENGINEER
GARY WILLIAM KOPPELMANN
STATE OF IDAHO
6418
050802

SUBCONTRACT NO.	S01-588058
REQUESTER:	
DESIGN:	L G FOX
DRAWN:	V A MAXEY-SUHR
PROJECT NO.	
SPEC CODE	
FOR REVIEW/APPROVAL SIGNATURES SEE DAR NO.	DAR
EFFECTIVE DATE:	

INEEL Idaho National Engineering & Environmental Laboratory BECHTEL BWXT IDAHO, LLC

CH2MHILL MWH MONTGOMERY WATSON HARZA

INEEL CERCLA DISPOSAL FACILITY (ICDF)

ELECTRICAL CONTROL DIAGRAMS

SIZE	CAGE CODE	INDEX CODE NUMBER AREA	TYPE	CL	ORIG	DWG-	REV
D		B21	9999	02			0

SCALE: NONE CPP SHEET E-204

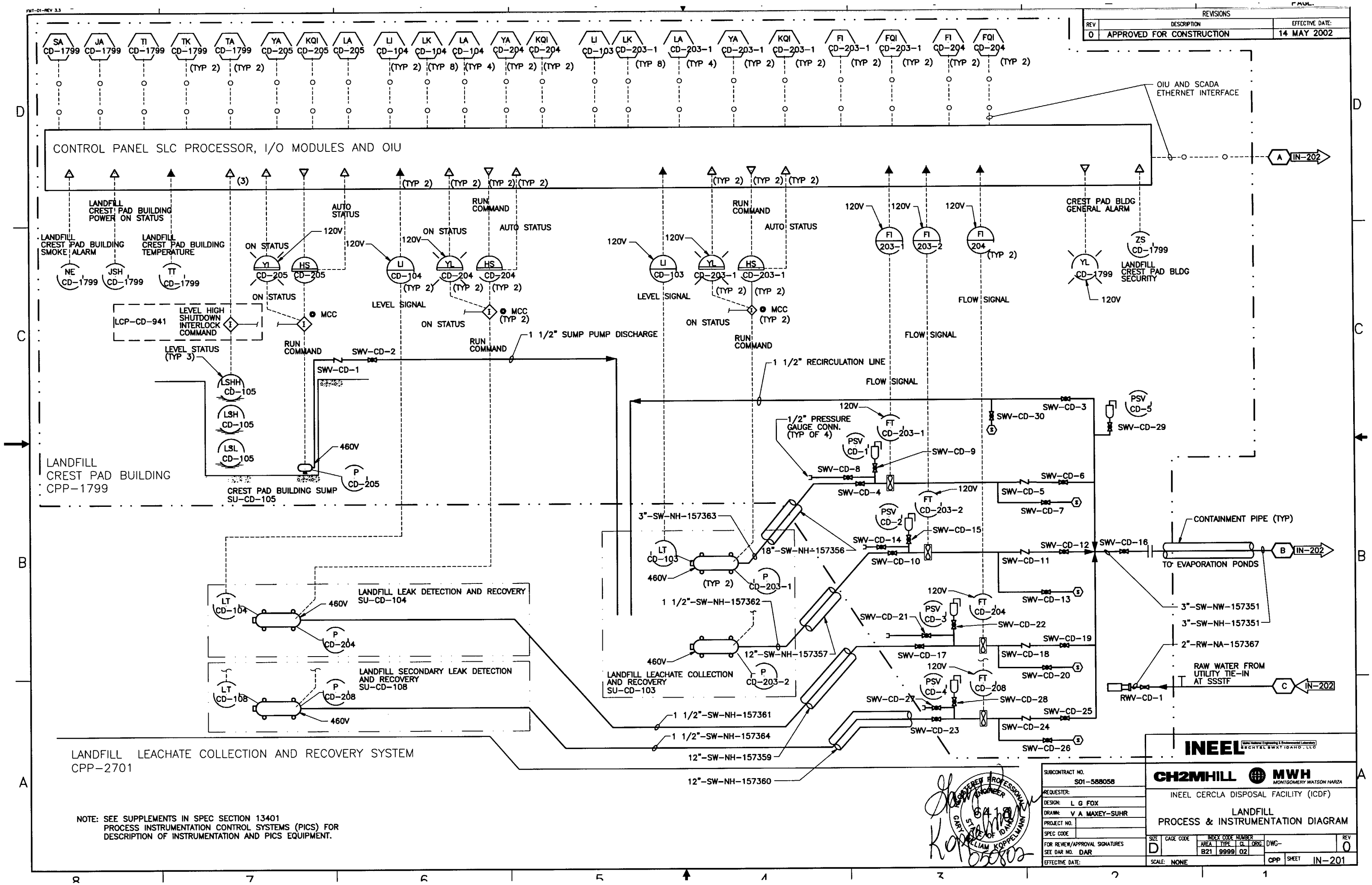

REVISIONS
REV | DESCRIPTION | EFFECTIVE DATE:
0 | APPROVED FOR CONSTRUCTION | 14 MAY 2002
CONTROL PANEL SLC PROCESSOR, I/O MODULES AND OIU
OIU AND SCADA ETHERNET INTERFACE
LANDFILL CREST PAD BUILDING POWER ON STATUS
LANDFILL CREST PAD BUILDING SMOKE ALARM
LANDFILL CREST PAD BUILDING TEMPERATURE
CREST PAD BLDG GENERAL ALARM
LANDFILL CREST PAD BLDG SECURITY
LCP-CD-941
LEVEL HIGH SHUTDOWN INTERLOCK COMMAND
LEVEL STATUS (TYP 3)
1 1/2" SUMP PUMP DISCHARGE
1 1/2" RECIRCULATION LINE
1/2" PRESSURE GAUGE CONN. (TYP OF 4)
CONTAINMENT PIPE (TYP)
TO EVAPORATION PONDS
3"-SW-NW-157351
3"-SW-NH-157351
2"-RW-NA-157367
RAW WATER FROM UTILITY TIE-IN AT SSSTF
LANDFILL CREST PAD BUILDING CPP-1799
CREST PAD BUILDING SUMP SU-CD-105
LANDFILL LEAK DETECTION AND RECOVERY SU-CD-104
LANDFILL SECONDARY LEAK DETECTION AND RECOVERY SU-CD-108
LANDFILL LEACHATE COLLECTION AND RECOVERY SU-CD-103
LANDFILL LEACHATE COLLECTION AND RECOVERY SYSTEM CPP-2701
NOTE: SEE SUPPLEMENTS IN SPEC SECTION 13401 PROCESS INSTRUMENTATION CONTROL SYSTEMS (PICS) FOR DESCRIPTION OF INSTRUMENTATION AND PICS EQUIPMENT.
INEEL
CH2MHILL
MWH MONTGOMERY WATSON HARZA
INEEL CERCLA DISPOSAL FACILITY (ICDF)
LANDFILL PROCESS & INSTRUMENTATION DIAGRAM
SUBCONTRACT NO. S01-588058
REQUESTER:
DESIGN: L G FOX
DRAWN: V A MAXEY-SUHR
PROJECT NO.
SPEC CODE
FOR REVIEW/APPROVAL SIGNATURES SEE DAR NO. DAR
EFFECTIVE DATE:
SIZE D
CAGE CODE
INDEX CODE NUMBER AREA B21 TYPE 9999 CL 02 ORIG
DWG-
REV 0
SCALE: NONE
CPP
SHEET IN-201
REGISTERED PROFESSIONAL ENGINEER STATE OF IDAHO GARY WILLIAM KOPPELMANN

REVISIONS		
REV	DESCRIPTION	EFFECTIVE DATE:
0	APPROVED FOR CONSTRUCTION	14 MAY 2002

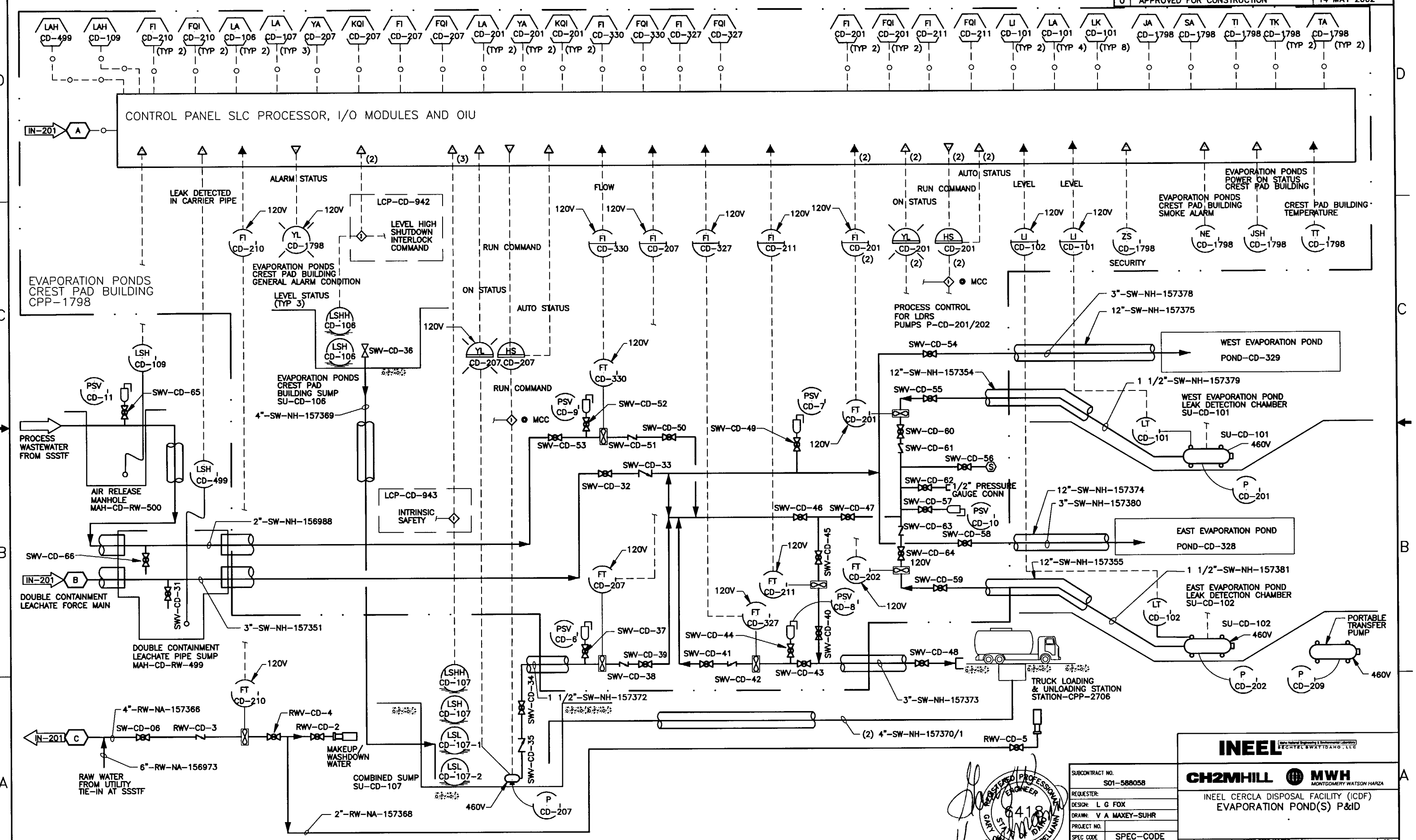

NOTE: SEE SUPPLEMENTS IN SPEC SECTION 13401 PICS FOR DESCRIPTION OF INSTRUMENTATION AND PICS EQUIPMENT.

REGISTERED PROFESSIONAL ENGINEER 6418 STATE OF IDAHO GARY WILLIAM KOPPELMANN 050802

SUBCONTRACT NO.	S01-588058
REQUESTER:	
DESIGN:	L G FOX
DRAWN:	V A MAXEY-SUHR
PROJECT NO.	
SPEC CODE	SPEC-CODE
FOR REVIEW/APPROVAL SIGNATURES SEE DAR NO.	DAR
EFFECTIVE DATE:	

INEEL — Idaho National Engineering & Environmental Laboratory — BECHTEL BWXT IDAHO, LLC

CH2MHILL — MWH MONTGOMERY WATSON HARZA

INEEL CERCLA DISPOSAL FACILITY (ICDF)
EVAPORATION POND(S) P&ID

SIZE	CAGE CODE	INDEX CODE NUMBER AREA	TYPE	CL	ORIG	DWG-	REV
D		B21	0000	00			0

SCALE: CPP SHEET IN-202

REVISIONS		
REV	DESCRIPTION	EFFECTIVE DATE:
0	APPROVED FOR CONSTRUCTION	14 MAY 2002

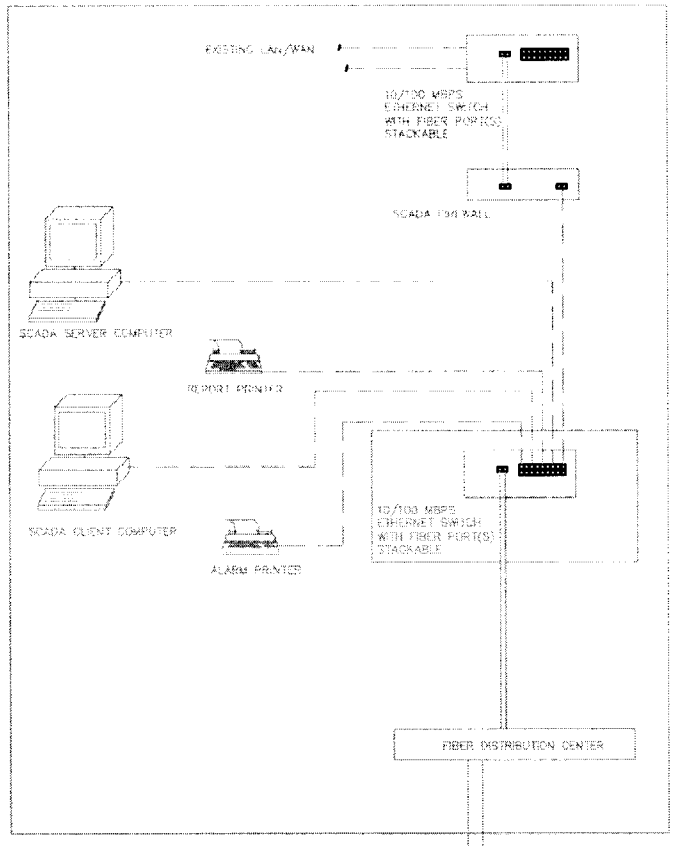

INEEL SCADA DISTRIBUTION

FIBER OPTIC CABLES

NOTES:

1. FIBER OPTIC SWITCH AT INEEL CONNECTS FIBER OUTPUT TO FIBER DISTRIBUTION PANEL (PATCH PANEL). ETHERNET FIBER OPTIC CABLES (MULTI-MODE) ARE ROUTED FROM FIBER DISTRIBUTION PANEL TO INEEL CERCLA DISPOSAL FACILITY SLC-5/05 ETHERNET PROCESSOR LOCATED INSIDE LEACHATE COLLECTION CREST BUILDING.

2. LANDFILL CREST PAD BUILDING SLC5/05 ETHERNET PROCESSOR AND CHASSIS SHALL CONSIST OF THE FOLLOWING MODULES AND COMPONENTS:
   > BLACK BOX MODEL NUMBER LE1401A 8 PORT MODULAR FIBER SWITCH WITH 4 PORT FIBER MODULE PART NUMBER LE1419C AND 4 PORT RJ45 DUAL SPEED MODULE PART NUMBER LE1425C
   > FIBER PATCH PANEL
   > AB MODEL NUMBER PANELVIEW 600 OIU.
   > AB MODEL NUMBER 1746-P2 POWER SUPPLY.
   > AB MODEL NUMBER 1747-A7 7 SLOT CHASSIS.
   > AB MODEL NUMBER 1747-L552 SLC- 5/05 PROCESSOR INSTALLED IN SLOT 0.
   > AB MODEL NUMBER 1746-NI8 ANALOG INPUT MODULE INSTALLED IN SLOT 1.
   > AB MODEL NUMBER 1746-IB16 DISCRETE INPUT MODULE INSTALLED IN SLOT 3.
   > AB MODEL NUMBER 1746-OX8 DISCRETE OUTPUT MODULES INSTALLED IN SLOT 5.
   > AB MODEL NUMBER BLANK MODULES INSTALLED IN SLOT 2, 4, 6.

3. EVAPORATOR POND(S) CREST PAD BUILDING SLC5/05 ETHERNET PROCESSOR AND CHASSIS SHALL CONSIST OF THE FOLLOWING MODULES AND COMPONENTS:
   > BLACK BOX MODEL NUMBER LE1401A 8 PORT MODULAR FIBER SWITCH WITH 4 PORT FIBER MODULE PART NUMBER LE1419C AND 4 PORT RJ45 DUAL SPEED MODULE PART NUMBER LE1425C
   > FIBER PATCH PANEL
   > AB MODEL NUMBER PANELVIEW 600 OIU.
   > AB MODEL NUMBER 1746-P2 POWER SUPPLY.
   > AB MODEL NUMBER 1747-A7 7 SLOT CHASSIS.
   > AB MODEL NUMBER 1747-L552 SLC- 5/05 PROCESSOR INSTALLED IN SLOT 0.
   > AB MODEL NUMBER 1746-NI8 ANALOG INPUT MODULE INSTALLED IN SLOT 1, 2.
   > AB MODEL NUMBER 1746-IB16 DISCRETE INPUT MODULE INSTALLED IN SLOT 3, 4.
   > AB MODEL NUMBER 1746-OX8 DISCRETE OUTPUT MODULES INSTALLED IN SLOT 5.
   > AB MODEL NUMBER BLANK MODULES INSTALLED IN SLOT 6.

4. SSSTF BUILDING SLC5/05 ETHERNET PROCESSOR AND CHASSIS SHALL CONSIST OF THE FOLLOWING MODULES AND COMPONENTS:
   > BLACK BOX MODEL NUMBER LE1401A 8 PORT MODULAR FIBER SWITCH WITH 4 PORT FIBER MODULE PART NUMBER LE1419C AND 4 PORT RJ45 DUAL SPEED MODULE PART NUMBER LE1425C
   > FIBER PATCH PANEL
   > AB MODEL NUMBER PANELVIEW 600 OIU.
   > AB MODEL NUMBER 1746-P2 POWER SUPPLY.
   > AB MODEL NUMBER 1747-A7 7 SLOT CHASSIS.
   > AB MODEL NUMBER 1747-L552 SLC- 5/05 PROCESSOR INSTALLED IN SLOT 0.
   > AB MODEL NUMBER 1746-IA8 DISCRETE INPUT MODULE INSTALLED IN SLOT 1.
   > AB MODEL NUMBER 1746-IA8 DISCRETE INPUT MODULE INSTALLED IN SLOT 2.
   > AB MODEL NUMBER 1746-N2 BLANK MODULE INSTALLED IN SLOT 3.
   > AB MODEL NUMBER 1746-N2 BLANK MODULE INSTALLED IN SLOT 4.
   > AB MODEL NUMBER 1746-N2 BLANK MODULE INSTALLED IN SLOT 5.
   > AB MODEL NUMBER 1746-NI8 ANALOG INPUT MODULES IN SLOT 6.
   > AB MODEL NUMBER 1746-NI8 ANALOG INPUT MODULES IN SLOT 7.

LEGEND

FIBER OPTIC CABLES
RJ-45 CONNECTOR AND 8-WIRE CABLES
FIBER PATCH CHORDS ST-SC

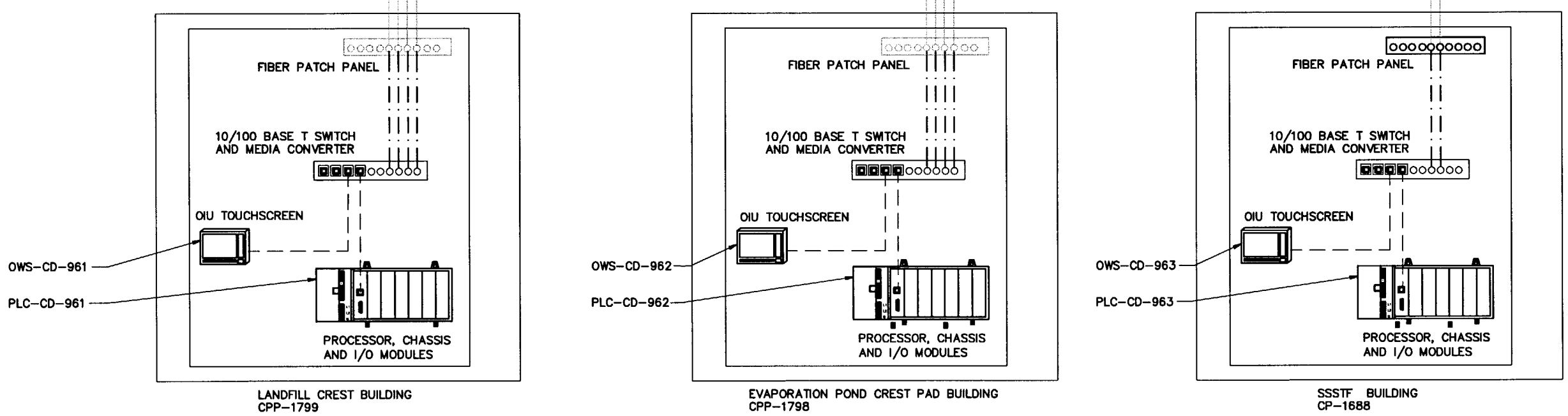

LANDFILL CREST BUILDING
CPP-1799

EVAPORATION POND CREST PAD BUILDING
CPP-1798

SSSTF BUILDING
CP-1688

INEEL CERCLA DISPOSAL PICS BLOCK DIAGRAM

REGISTERED PROFESSIONAL ENGINEER GARY WILLIAM KOPPELMANN 6418 STATE OF IDAHO

SUBCONTRACT NO.	S01-588058
REQUESTER:	
DESIGN:	LG FOX
DRAWN:	V A MAXEY-SUHR
PROJECT NO.	
SPEC CODE	
FOR REVIEW/APPROVAL SIGNATURES SEE DAR NO.	DAR
EFFECTIVE DATE:	

INEEL Idaho National Engineering & Environmental Laboratory BECHTEL BWXT IDAHO, LLC

CH2MHILL MWH MONTGOMERY WATSON HARZA

INEEL CERCLA DISPOSAL FACILITY (ICDF)

PICS BLOCK DIAGRAM

SIZE	CAGE CODE	INDEX CODE NUMBER AREA	TYPE	CL	ORIG	DWG-	REV
D		B21	9999	02			0

SCALE: NONE

CPP SHEET IN-203

REVISIONS		
REV	DESCRIPTION	EFFECTIVE DATE:
0	APPROVED FOR CONSTRUCTION	14 MAY 2002

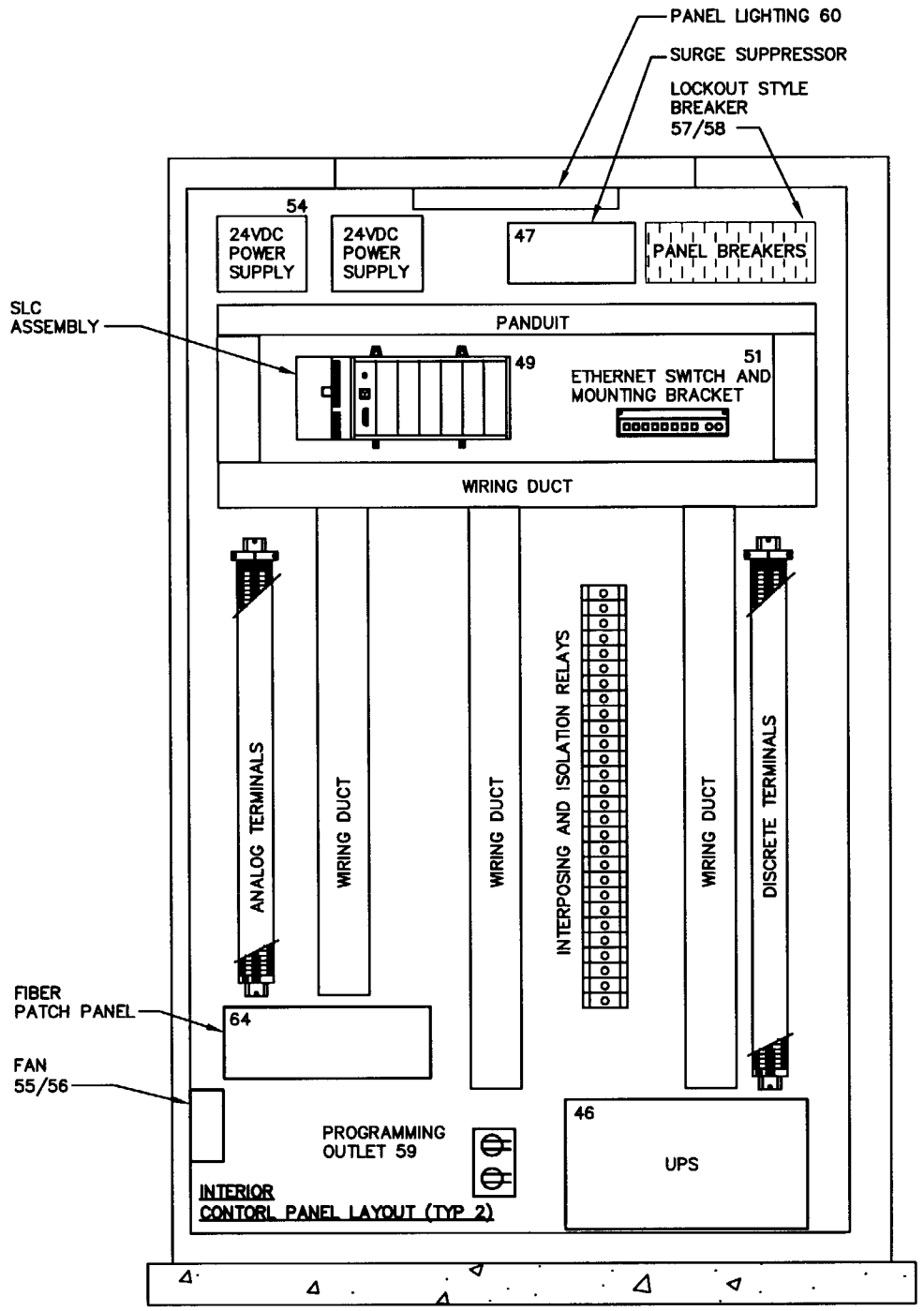

LANDFILL AND EVAPORATION PONDS
CREST PAD BULDING CONTROL PANEL
INTERIOR VIEW

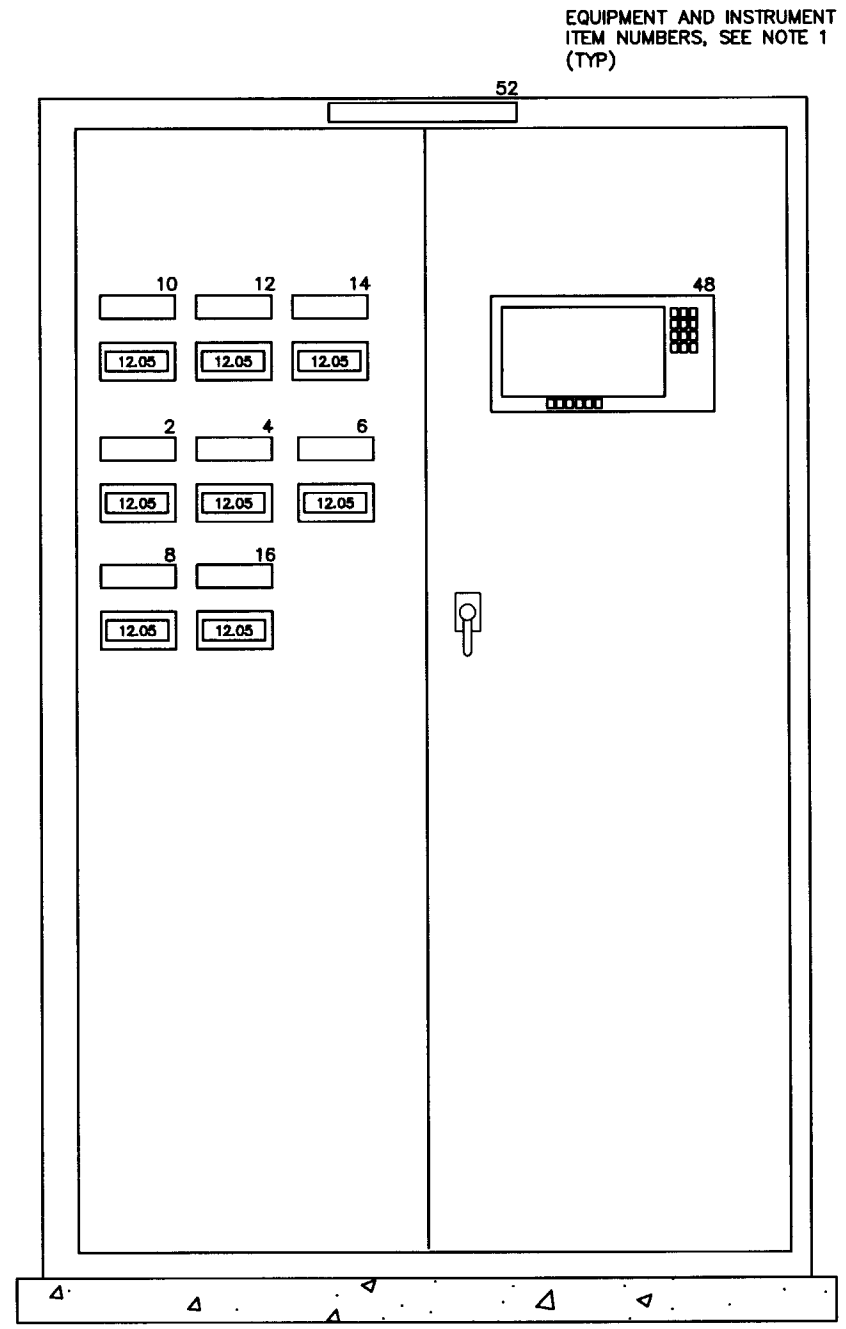

LANDFILL LEACHATE COLLECTION
CREST PAD BUILDING CONTROL PANEL
EXTERIOR VIEW CP-CD-950

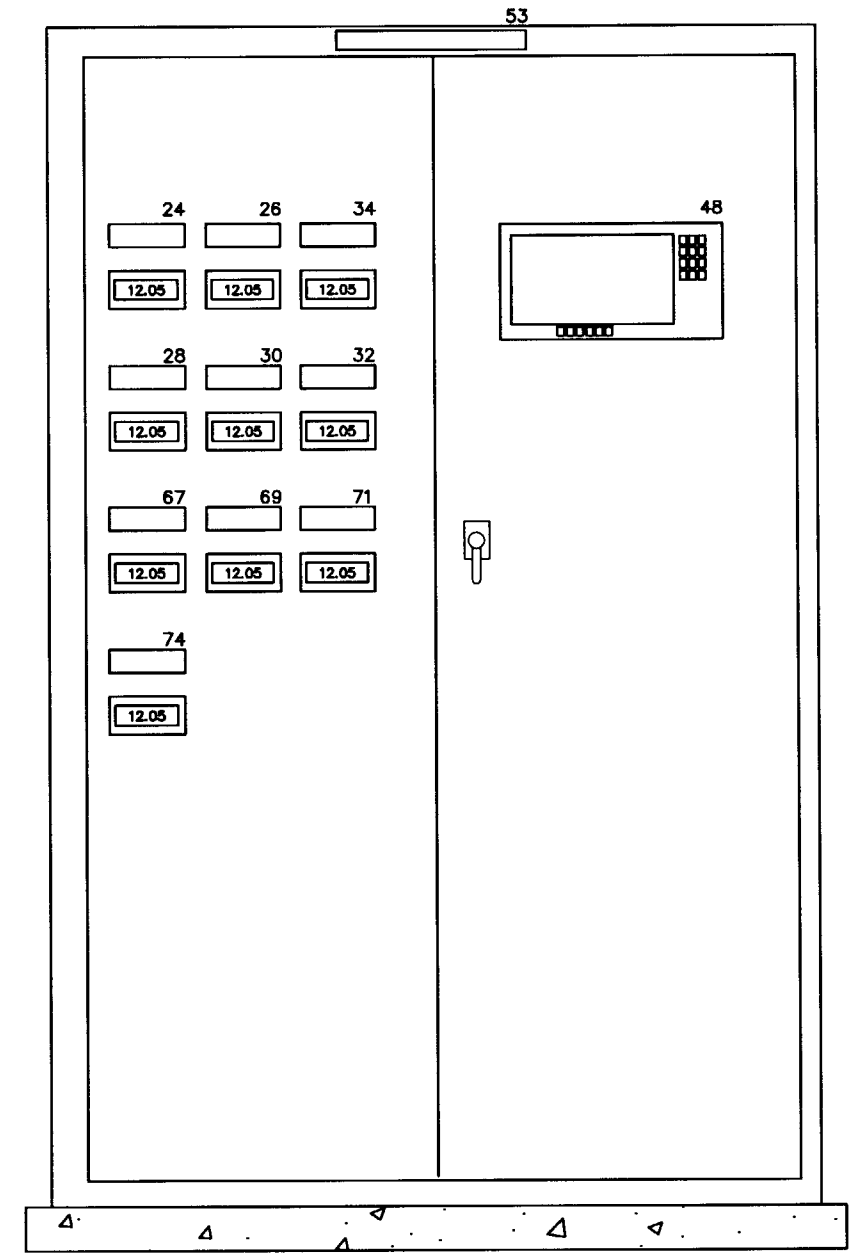

EVAPORATION PONDS
CREST PAD BUILDING CONTROL PANEL
EXTERIOR VIEW CP-CD-951

NOTES:

1. REFERENCE SUPPLEMENT #1 INSTRUMENT LIST ATTACHED TO SPECIFICATION 13401 PICS FOR DESCRIPTION, MANUFACTURER, AND MODEL NUMBERS FOR EACH ITEM.

REGISTERED PROFESSIONAL ENGINEER 6418 STATE OF IDAHO GARY WILLIAM KOPPELMANN

SUBCONTRACT NO.	S01-588058
REQUESTER:	
DESIGN:	L G FOX
DRAWN:	V A MAXEY-SUHR
PROJECT NO.	
SPEC CODE	
FOR REVIEW/APPROVAL SIGNATURES SEE DAR NO.	DAR
EFFECTIVE DATE:	

INEEL Idaho National Engineering & Environmental Laboratory BECHTEL BWXT IDAHO, LLC

CH2MHILL MWH MONTGOMERY WATSON HARZA

INEEL CERCLA DISPOSAL FACILITY (ICDF)

CREST PAD BUILDINGS CONTROL PANEL ELEVATIONS

SIZE	CAGE CODE	INDEX CODE NUMBER				DWG-	REV
		AREA	TYPE	CL	ORIG		
D		B21	9999	02			0
SCALE: NONE						CPP SHEET IN-204	

FMT-01-REV 3.3

PAGE:

REVISIONS		
REV	DESCRIPTION	EFFECTIVE DATE:
0	APPROVED FOR CONSTRUCTION	14 MAY 2002

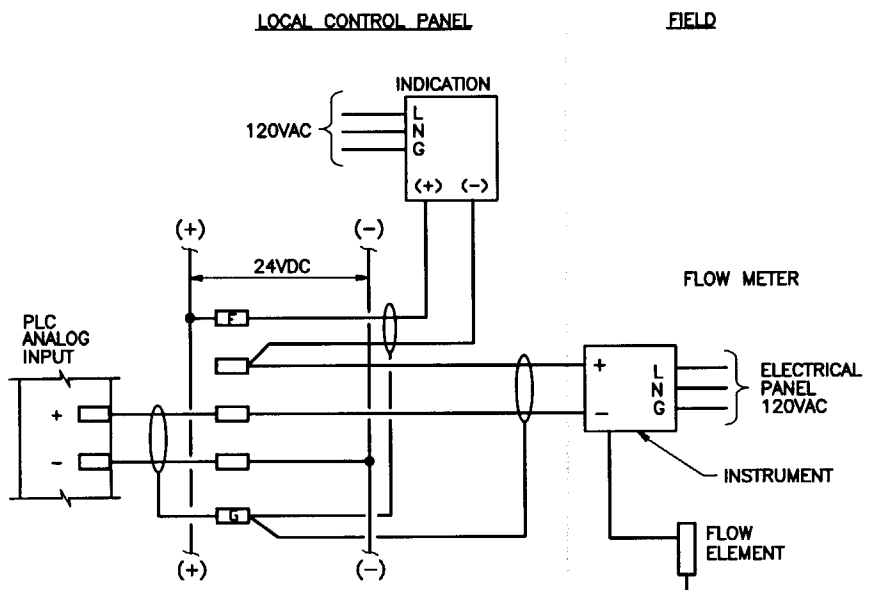

TYPICAL WIRING DIAGRAM NO. 1

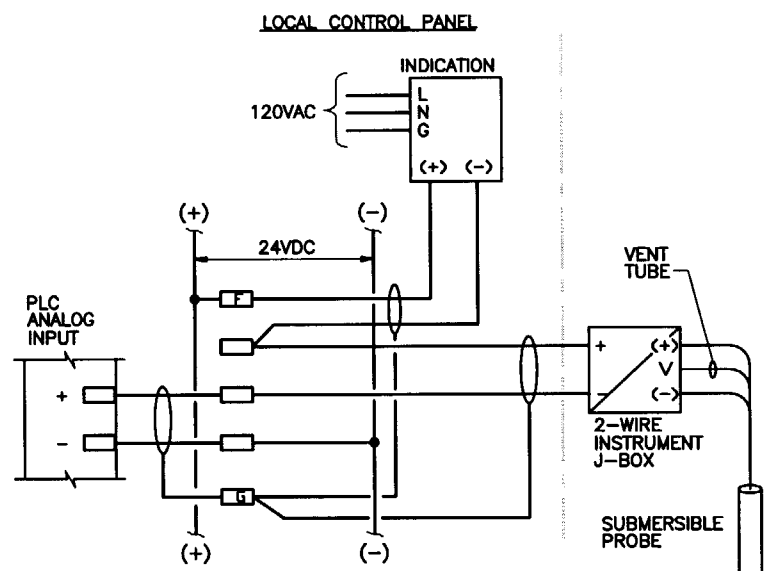

TYPICAL WIRING DIAGRAM NO. 2

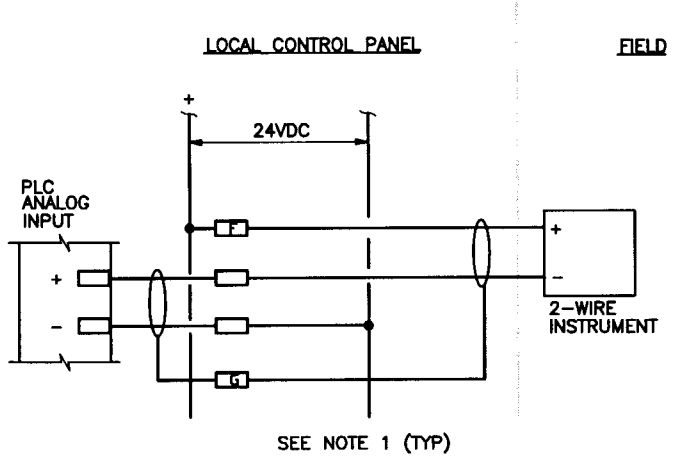

TYPICAL WIRING DIAGRAM NO. 3

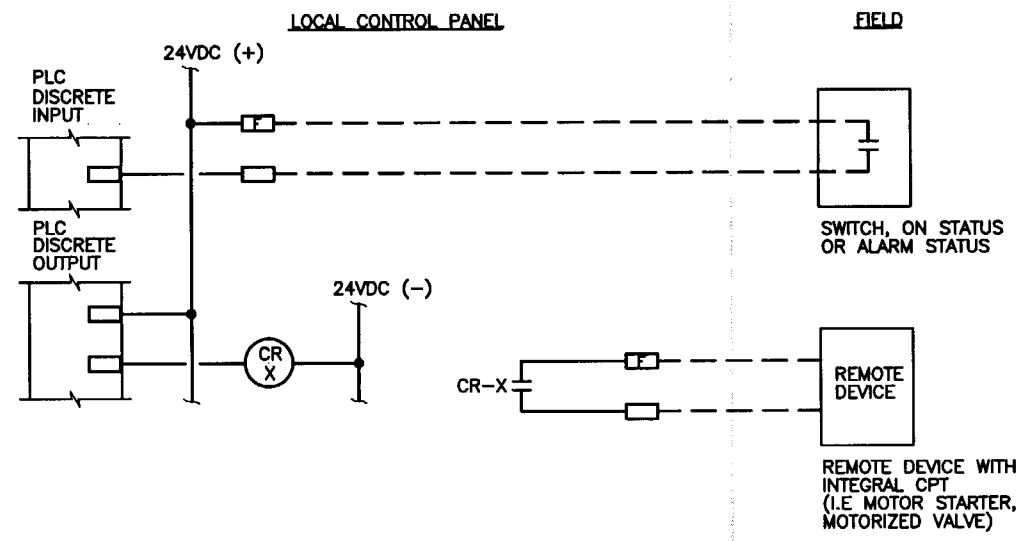

TYPICAL WIRING DIAGRAM NO. 4

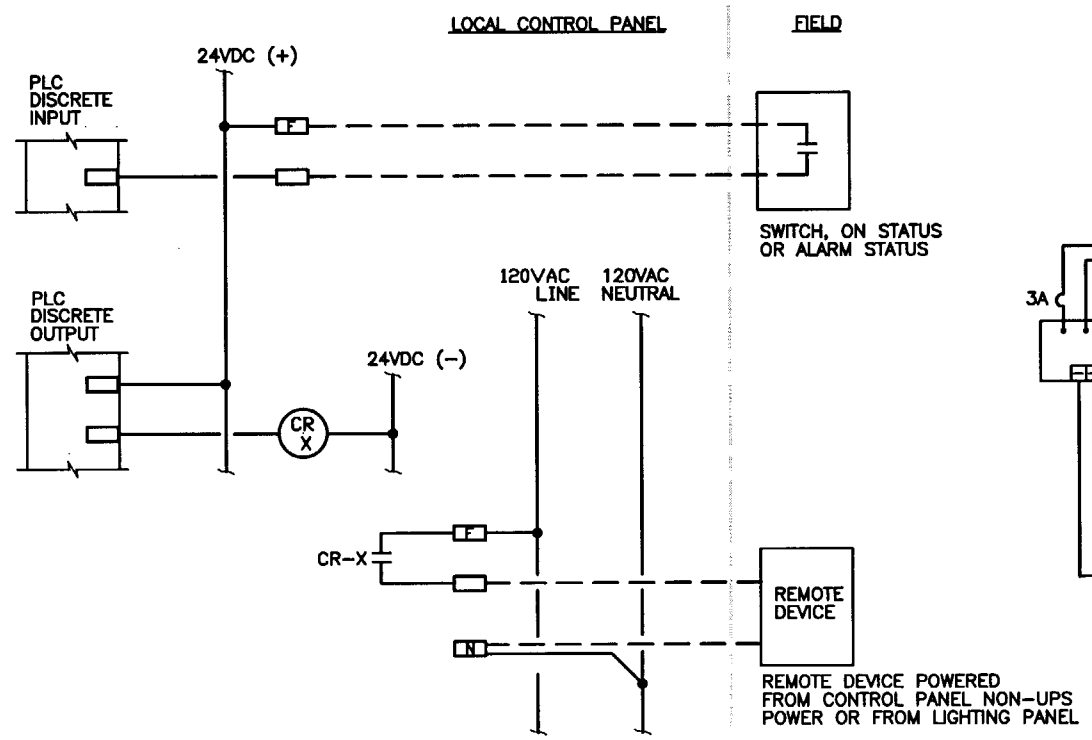

TYPICAL WIRING DIAGRAM NO. 5

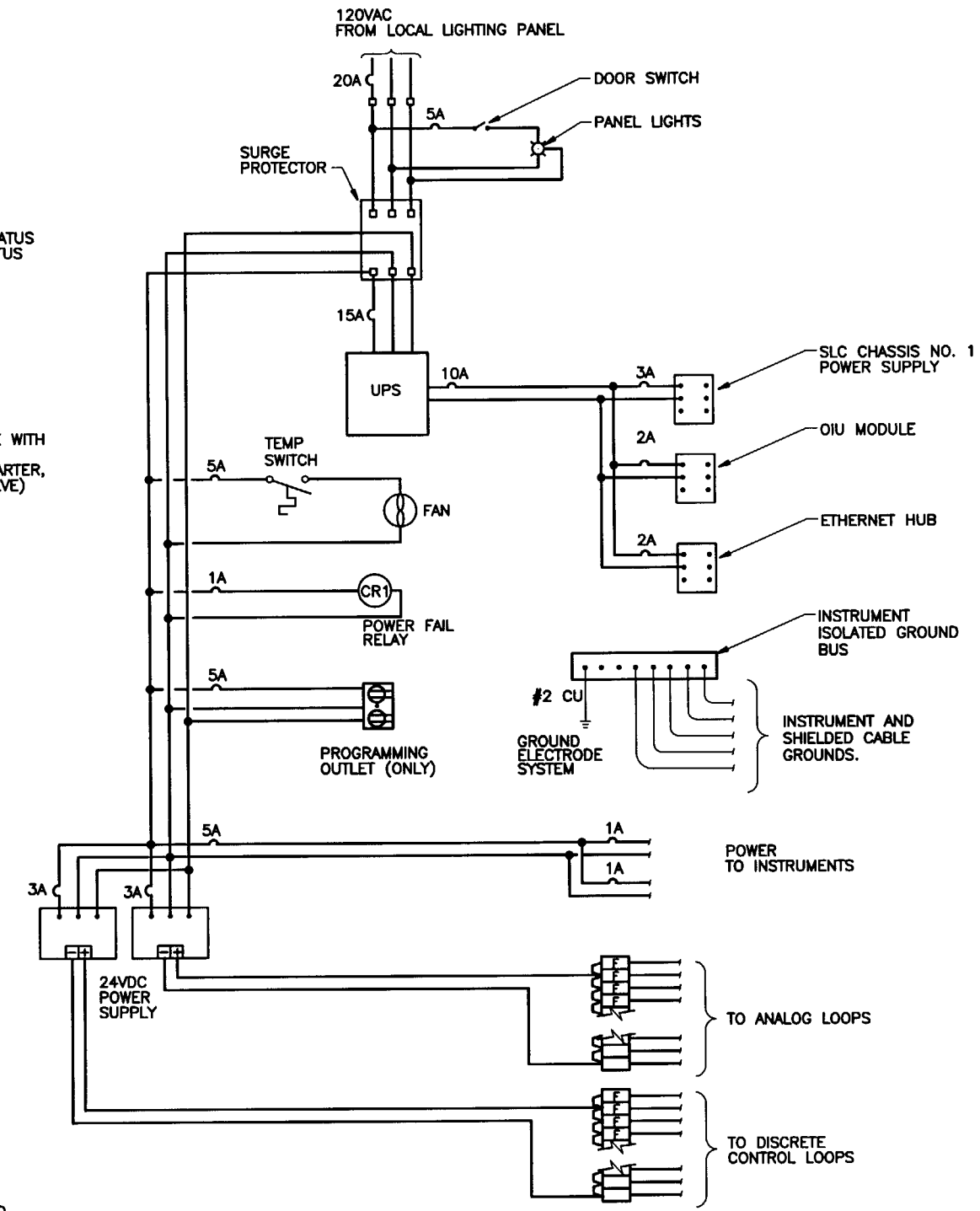

CONTROL PANEL POWER LAYOUT (TYP 2)

NOTES:

1. GROUND TERMINALS FOR ALL INSTRUMENT SHIELDS AND ENCLOSURE GROUNDING SHALL BE BONDED TOGETHER AND TO CONTROL PANELS ISOLATED GROUND BUS.
2. ALL INSTRUMENT CABLES SHALL BE GROUNDED AT PLC END ONLY AND NOT IN INSTRUMENT ENCLOSURES.

LEGEND

F FUSED TERMINAL

G GROUND TERMINAL

REGISTERED PROFESSIONAL ENGINEER 6418 STATE OF IDAHO GARY WILLIAM KOPPELMANN 030502

SUBCONTRACT NO.	S01-588058
REQUESTER:	
DESIGN:	L G FOX
DRAWN:	V A MAXEY-SUHR
PROJECT NO.	
SPEC CODE	
FOR REVIEW/APPROVAL SIGNATURES SEE DAR NO.	DAR
EFFECTIVE DATE:	

INEEL (Idaho National Engineering & Environmental Laboratory) BECHTEL BWXT IDAHO, LLC

CH2MHILL MWH MONTGOMERY WATSON HARZA

INEEL CERCLA DISPOSAL FACILITY (ICDF)

TYPICAL WIRING DIAGRAMS

SIZE	CAGE CODE	INDEX CODE NUMBER				DWG-	REV
		AREA	TYPE	CL	ORG		
D		B21	9999	02			0

SCALE: NONE CPP SHEET IN-205

FMT-D1-REV 3.3

REVISIONS		
REV	DESCRIPTION	EFFECTIVE DATE:
0	APPROVED FOR CONSTRUCTION	14 MAY 2002

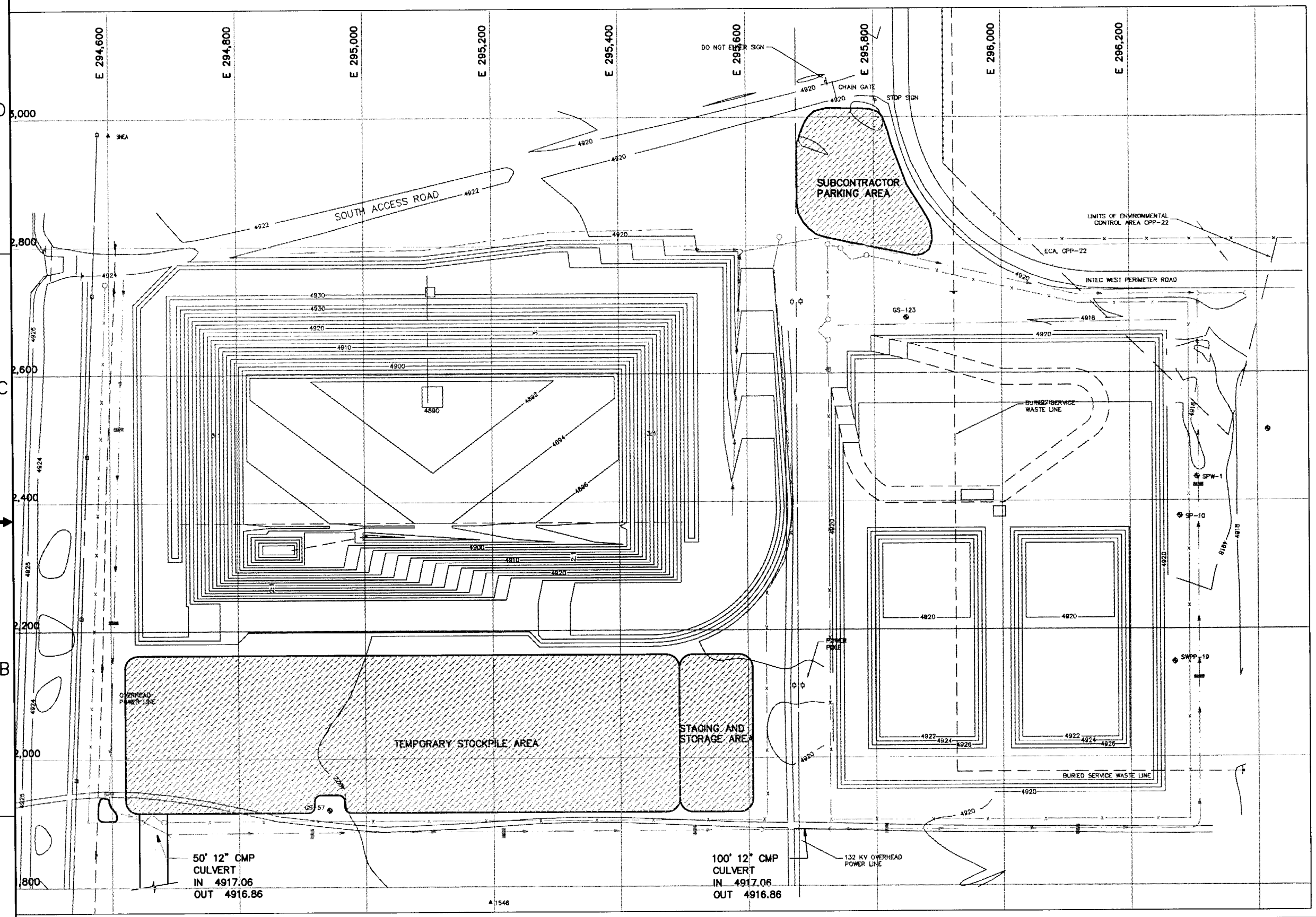

NOTES:

1. TOPSOIL AND SEED DISTURBED AREAS UPON COMPLETION OF FINAL GRADING.
2. SEE SPECIFICATIONS FOR TEMPORARY EROSION CONTROL REQUIREMENTS.

LEGEND:

- TOPSOIL AND SEED
- DRAINAGE DITCH W/FLOW DIRECTION
- STRAW BALE CHECK DAM
- FILTER FENCE

N

SCALE
80' 0 80' 160'
CONTOUR INTERVAL 2FT.

5/7/02

PROFESSIONAL ENGINEER REGISTERED STATE OF IDAHO JAY G. DEHNER

SUBCONTRACT NO.	S01-588058
REQUESTER:	
DESIGN:	J DEHNER
DRAWN:	R MORGAN
PROJECT NO.	
SPEC CODE	
FOR REVIEW/APPROVAL SIGNATURES SEE DAR NO.	DAR
EFFECTIVE DATE:	

INEEL Idaho National Engineering & Environmental Laboratory BECHTEL BWXT IDAHO, LLC

CH2MHILL MWH MONTGOMERY WATSON HARZA

INEEL CERCLA DISPOSAL FACILITY (ICDF)

EROSION CONTROL PLAN

SIZE	CAGE CODE	INDEX CODE NUMBER AREA	TYPE	CL	ORG	DWG-	REV
D		B21	0100	02			

SCALE: AS SHOWN CPP SHEET EC-201

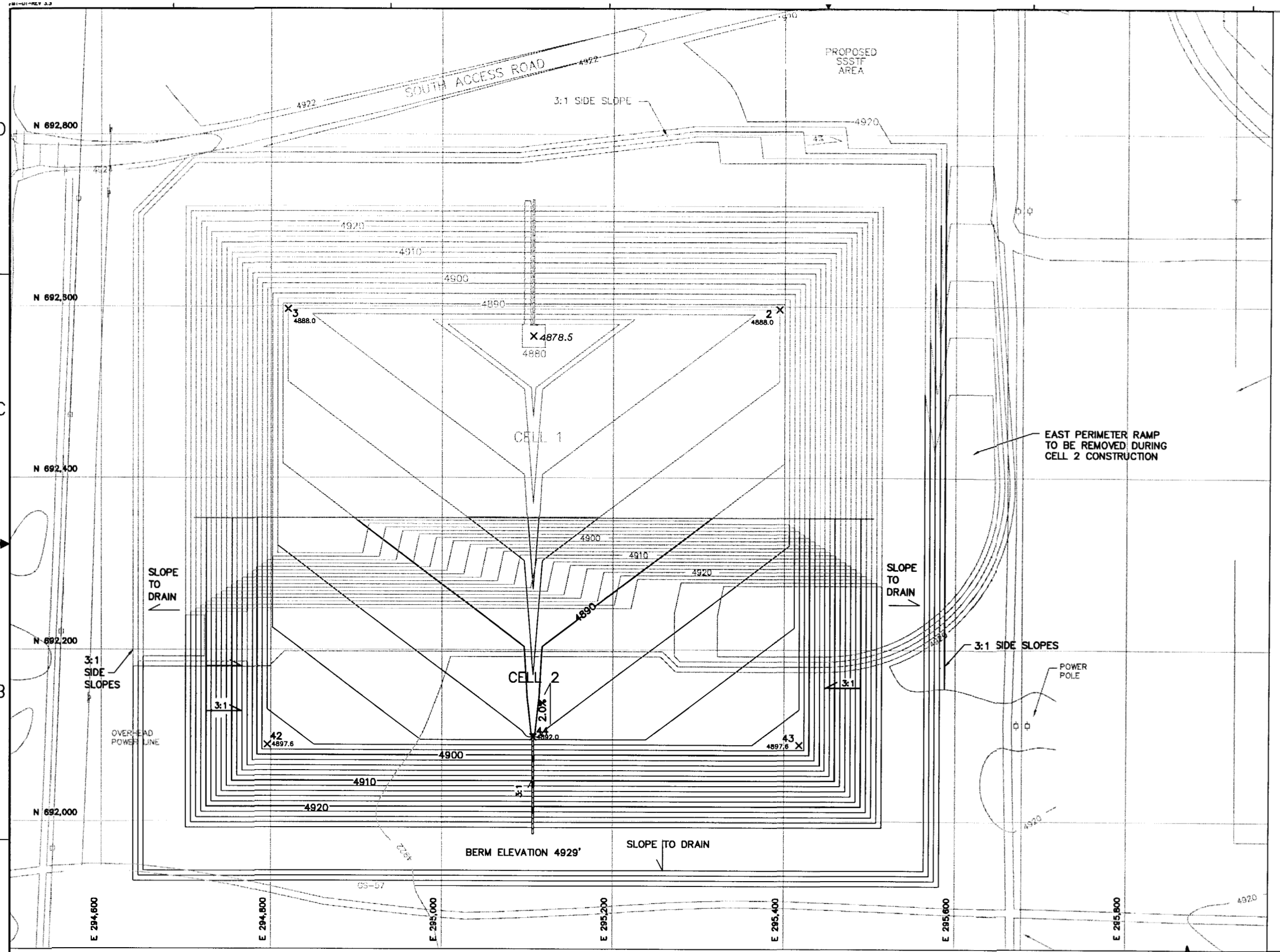

REVISIONS		
REV	DESCRIPTION	EFFECTIVE DATE:
0	APPROVED FOR CONSTRUCTION	14 MAY 2002

NOTES:

1. GRADES SHOWN ARE TOP OF SUBGRADE.

CELL 1&2 SUBGRADE CONTROL POINT LISTING

POINT NO.	NORTHING	EASTING	ELEVATION
1	692565.20	295106.75	4878.5
2	692596.70	295393.71	4888.0
3	692596.70	294819.79	4888.0
42	692088.77	294795.79	4897.6
43	692088.77	295417.71	4897.6
44	692098.04	295106.75	4892.0

PROFESSIONAL ENGINEER REGISTERED STATE OF IDAHO PHILLIP E. CROUSE 9147 5-17-02

SUBCONTRACT NO.	S01-588058
REQUESTER:	
DESIGN:	PHILLIP CROUSE
DRAWN:	JULIE GATES
PROJECT NO.	
SPEC CODE	
FOR REVIEW/APPROVAL SIGNATURES SEE DAR NO.	DAR
EFFECTIVE DATE:	

INEEL Idaho National Engineering & Environmental Laboratory BECHTEL BWXT IDAHO, LLC

CH2MHILL MWH MONTGOMERY WATSON HARZA

INEEL CERCLA DISPOSAL FACILITY (ICDF)

CELL 2
EXCAVATION PLAN

SIZE	CAGE CODE	INDEX CODE NUMBER AREA	TYPE	CL	ORIG	DWG-	REV
D		B21	0500	02			

SCALE: AS SHOWN CPP SHEET C-301

FMT-01-REV 3.3

REVISIONS		
REV	DESCRIPTION	EFFECTIVE DATE:
0	APPROVED FOR CONSTRUCTION	14 MAY 2002

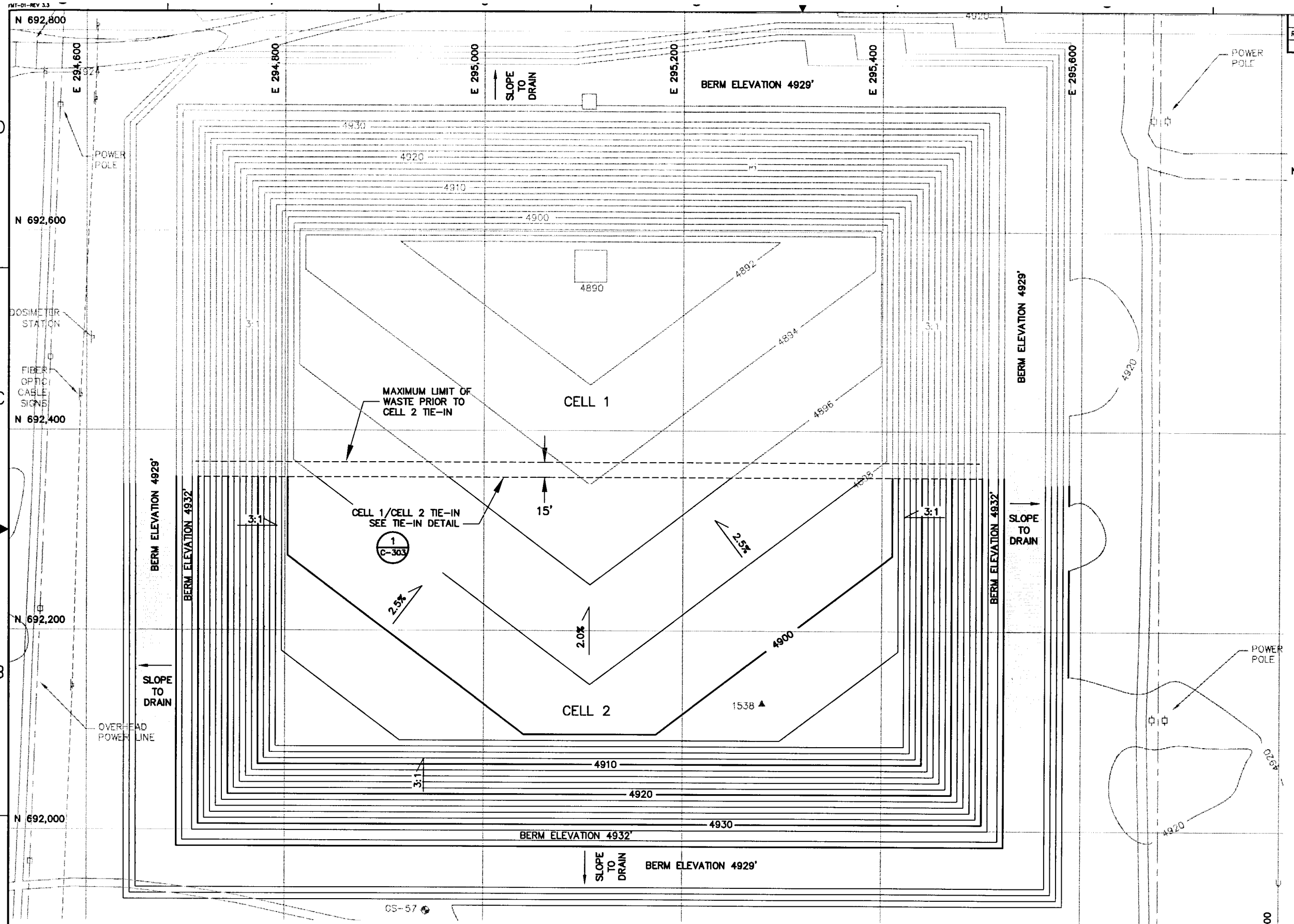

NOTE:
GRADES SHOWN ARE TO TOP OF OPERATIONS LAYER.

SCALE
50' 0 50' 100'
CONTOUR INTERVAL 2FT

PROFESSIONAL ENGINEER REGISTERED 9144 STATE OF IDAHO PHILLIP E. CROUSE

SUBCONTRACT NO.	S01-588058
REQUESTER:	
DESIGN:	PHILLIP CROUSE
DRAWN:	JULIE GATES
PROJECT NO.	
SPEC CODE	
FOR REVIEW/APPROVAL SIGNATURES SEE DAR NO.	DAR
EFFECTIVE DATE:	

INEEL Idaho National Engineering & Environmental Laboratory BECHTEL BWXT IDAHO, LLC

CH2MHILL MWH MONTGOMERY WATSON HARZA

INEEL CERCLA DISPOSAL FACILITY (ICDF)

CELL 2
FINAL GRADING PLAN

SIZE	CAGE CODE	INDEX CODE NUMBER AREA	TYPE	CL	ORG	DWG-	REV
D		B21	0500	02			0

SCALE: AS SHOWN CPP SHEET C-302

REVISIONS		
REV	DESCRIPTION	EFFECTIVE DATE:
0	APPROVED FOR CONSTRUCTION	14 MAY 2002

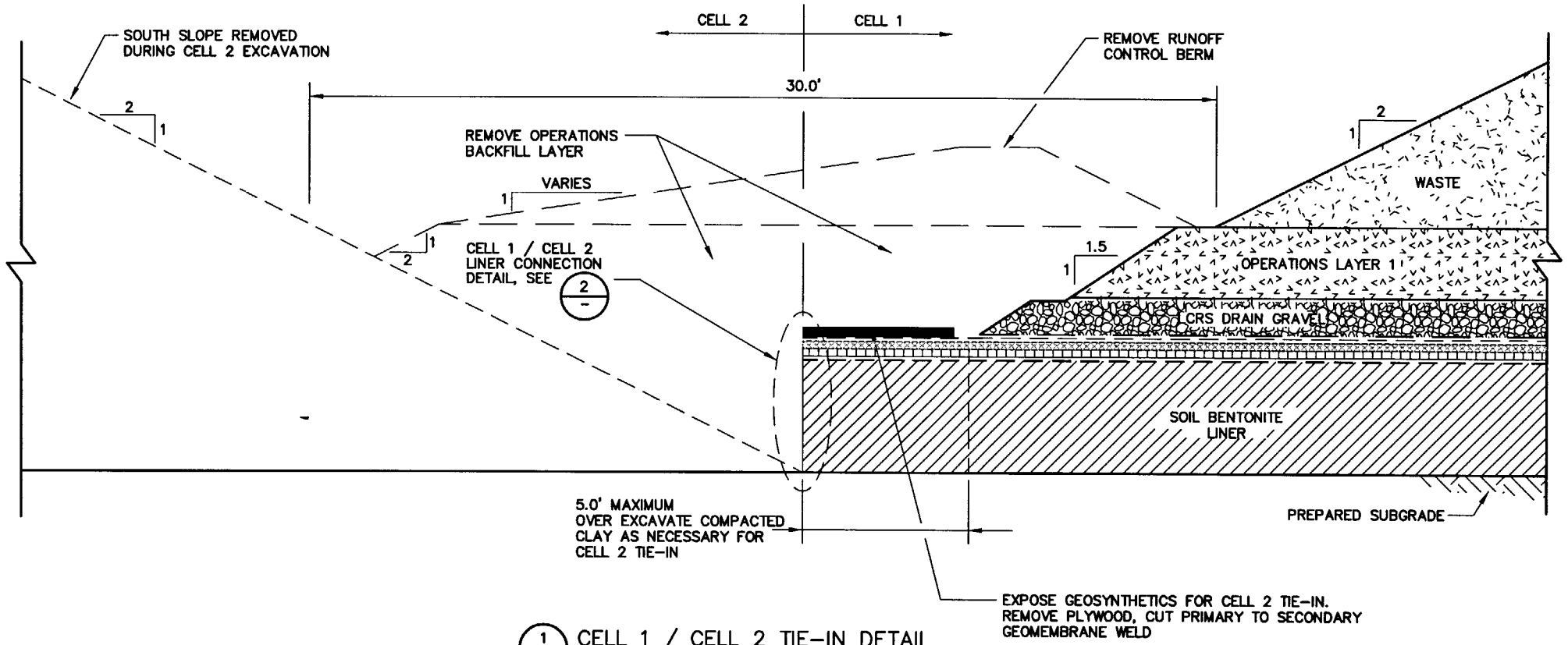

1/C-302 CELL 1 / CELL 2 TIE-IN DETAIL
NTS

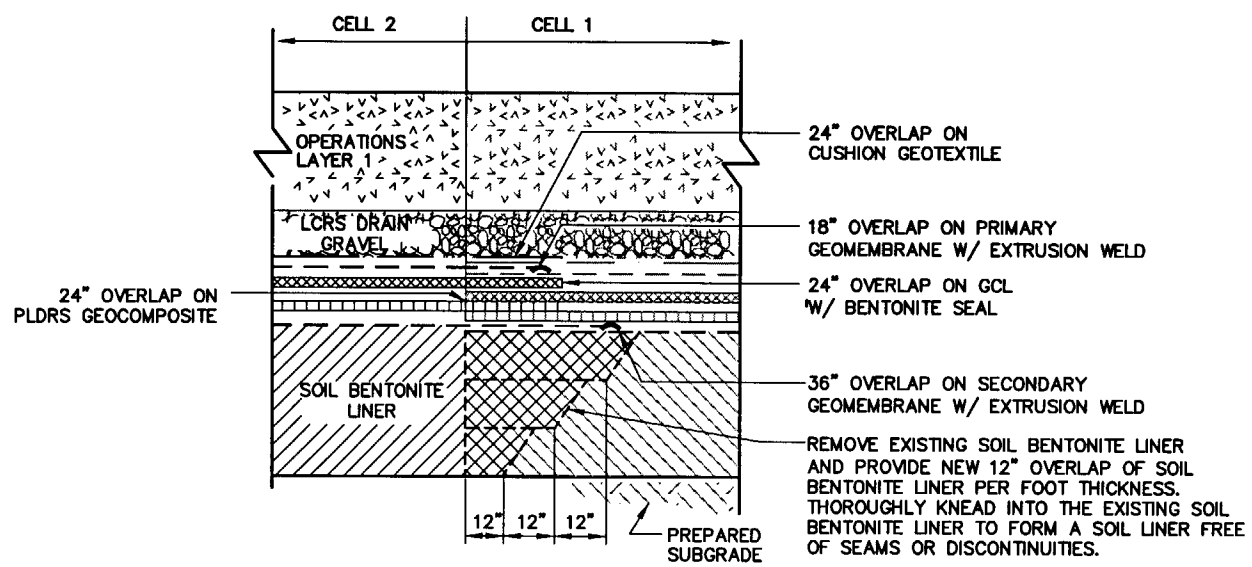

2/- CELL 1 / CELL 2 LINER CONNECTION DETAIL
NTS

PROFESSIONAL ENGINEER REGISTERED STATE OF IDAHO PHILLIP E. CROUSE 9144 5-7-02

SUBCONTRACT NO.	S01-588058
REQUESTER:	
DESIGN:	PHILLIP CROUSE
DRAWN:	NICOLE GONZALEZ
PROJECT NO.	
SPEC CODE	
FOR REVIEW/APPROVAL SIGNATURES SEE DAR NO.	DAR
EFFECTIVE DATE:	

INEEL (Idaho National Engineering & Environmental Laboratory) BECHTEL BWXT IDAHO, LLC

CH2MHILL MWH MONTGOMERY WATSON HARZA

INEEL CERCLA DISPOSAL FACILITY (ICDF)

CELL 2
SECTIONS AND DETAILS

SIZE	CAGE CODE	INDEX CODE NUMBER AREA	TYPE	CL	ORIG	DWG-	REV
D		B21	0100	02			0

SCALE: AS SHOWN | CPP | SHEET C-303

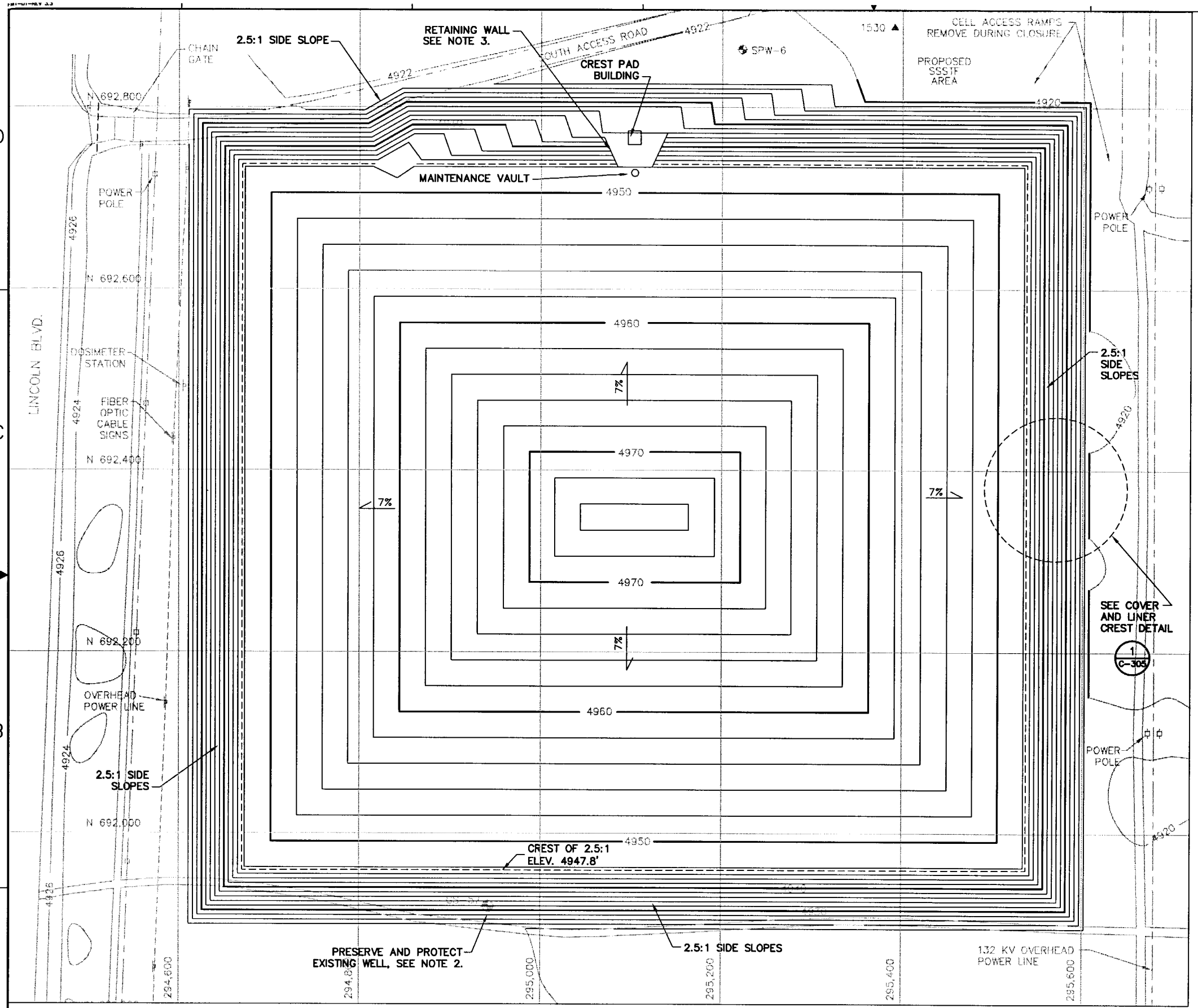

REVISIONS		
REV	DESCRIPTION	EFFECTIVE DATE:
0	APPROVED FOR CONSTRUCTION	14 MAY 2002

NOTES:

1. GRADES SHOWN ARE TOP OF FINAL COVER.
2. WELL USGS-57 IS LOCATED OUTSIDE OF THE CELL 2 PERIMETER EMBANKMENT, BUT FALLS WITHIN THE RIP RAP ARMOR OF THE COVER. EXTEND WELL AND PROTECTIVE CASING THROUGH RIP RAP TO PRESERVE AND PROTECT WELL AND ALLOW CONTINUED ACCESS FOR MONITORING.
3. PROVIDE ROCKERY RETANING WALL TO PROTECT EXISTING LANDFILL CREST PAD BUILDING DURING POST-CLOSURE OPERATION OF LEACHATE COLLECTION SYSTEM. ONCE LRCS OPERATION IS NO LONGER NECESSARY, WALL CAN BE REMOVED AND COVER SECTION CAN BE PLACED. ACCESS TO LEACHATE PIPING WOULD THEN BE PROVIDED BY MANTENANCE VAULT.

N

SCALE

60' 0 60' 120'

CONTOUR INTERVAL 2FT

PROFESSIONAL ENGINEER REGISTERED 9144 STATE OF IDAHO PHILLIP E. CROUSE 5-7-02

SUBCONTRACT NO.	S01-588058
REQUESTER:	
DESIGN:	PHILLIP CROUSE
DRAWN:	JANET BEVER
PROJECT NO.	
SPEC CODE	
FOR REVIEW/APPROVAL SIGNATURES SEE DAR NO.	DAR
EFFECTIVE DATE:	

INEEL Idaho National Engineering & Environmental Laboratory BECHTEL BWXT IDAHO, LLC

CH2MHILL MWH MONTGOMERY WATSON HARZA

INEEL CERCLA DISPOSAL FACILITY (ICDF)

CELL 1 AND CELL 2
FINAL COVER PLAN

SIZE	CAGE CODE	INDEX CODE NUMBER AREA	TYPE	CL	ORG	DWG-	REV
D		B21	0500	02			0

SCALE: AS SHOWN CPP SHEET C-304

REVISIONS		
REV	DESCRIPTION	EFFECTIVE DATE:
0	APPROVED FOR CONSTRUCTION	14 MAY 2002

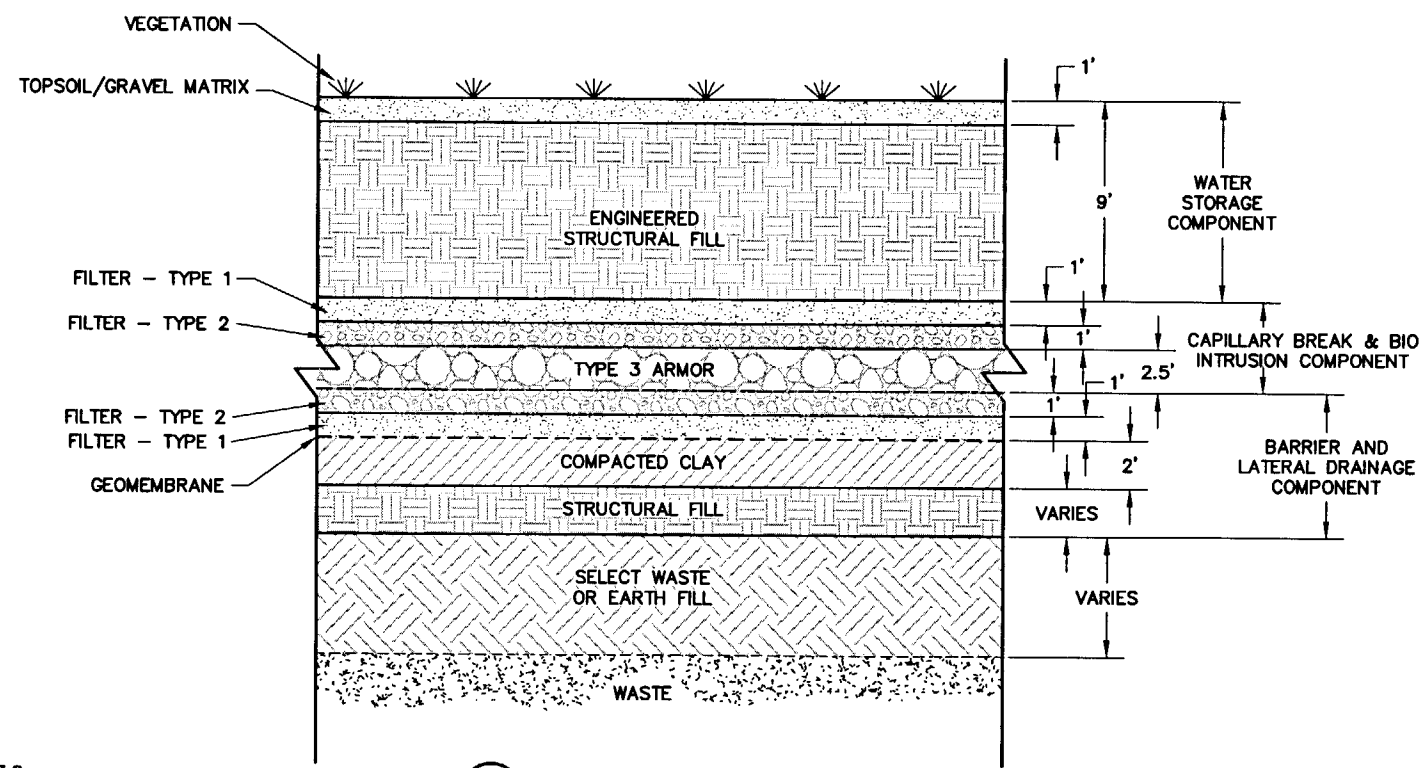

2 C-305 TYPICAL COVER DETAIL

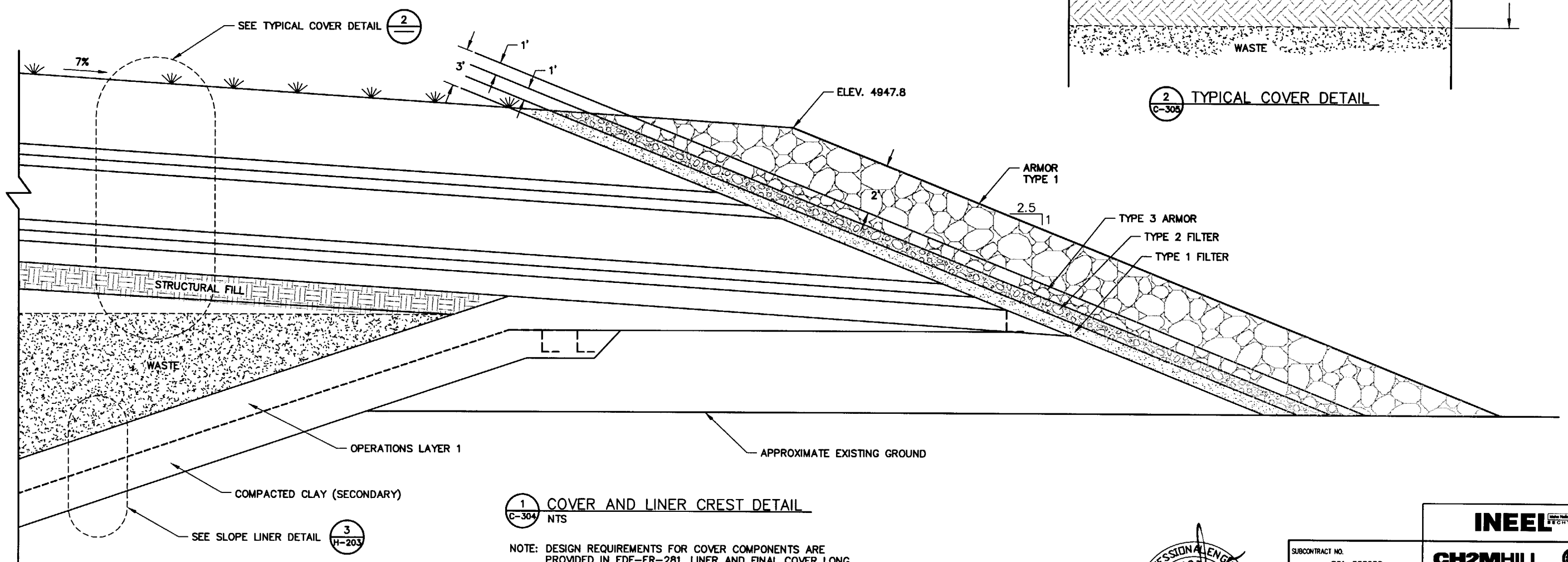

1 C-304 COVER AND LINER CREST DETAIL
NTS

NOTE: DESIGN REQUIREMENTS FOR COVER COMPONENTS ARE PROVIDED IN EDF-ER-281, LINER AND FINAL COVER LONG TERM PERFORMANCE EVALUATION AND FINAL COVER LIFE CYCLE EXPECTATION DESIGN STUDY.

PROFESSIONAL ENGINEER REGISTERED 9144 STATE OF IDAHO PHILLIP E. CROUSE 5-7-02

SUBCONTRACT NO.	S01-588058
REQUESTER:	
DESIGN:	PHILLIP CROUSE
DRAWN:	NICOLE GONZALEZ
PROJECT NO.	
SPEC CODE	
FOR REVIEW/APPROVAL SIGNATURES SEE DAR NO.	DAR
EFFECTIVE DATE:	

INEEL Idaho National Engineering & Environmental Laboratory BECHTEL BWXT IDAHO, LLC

CH2MHILL MWH MONTGOMERY WATSON HARZA

INEEL CERCLA DISPOSAL FACILITY (ICDF)

FINAL COVER
SECTIONS AND DETAILS

SIZE	CAGE CODE	INDEX CODE NUMBER AREA	TYPE	CL	ORIG	DWG-	REV
D		B21	0100	02			0

SCALE: AS SHOWN CPP SHEET C-305

REVISIONS		
REV	DESCRIPTION	EFFECTIVE DATE:
0	APPROVED FOR CONSTRUCTION	14 MAY 2002

NOTES:

1. GRADES SHOWN ARE TOP OF PRIMARY GEOMEMBRANE.

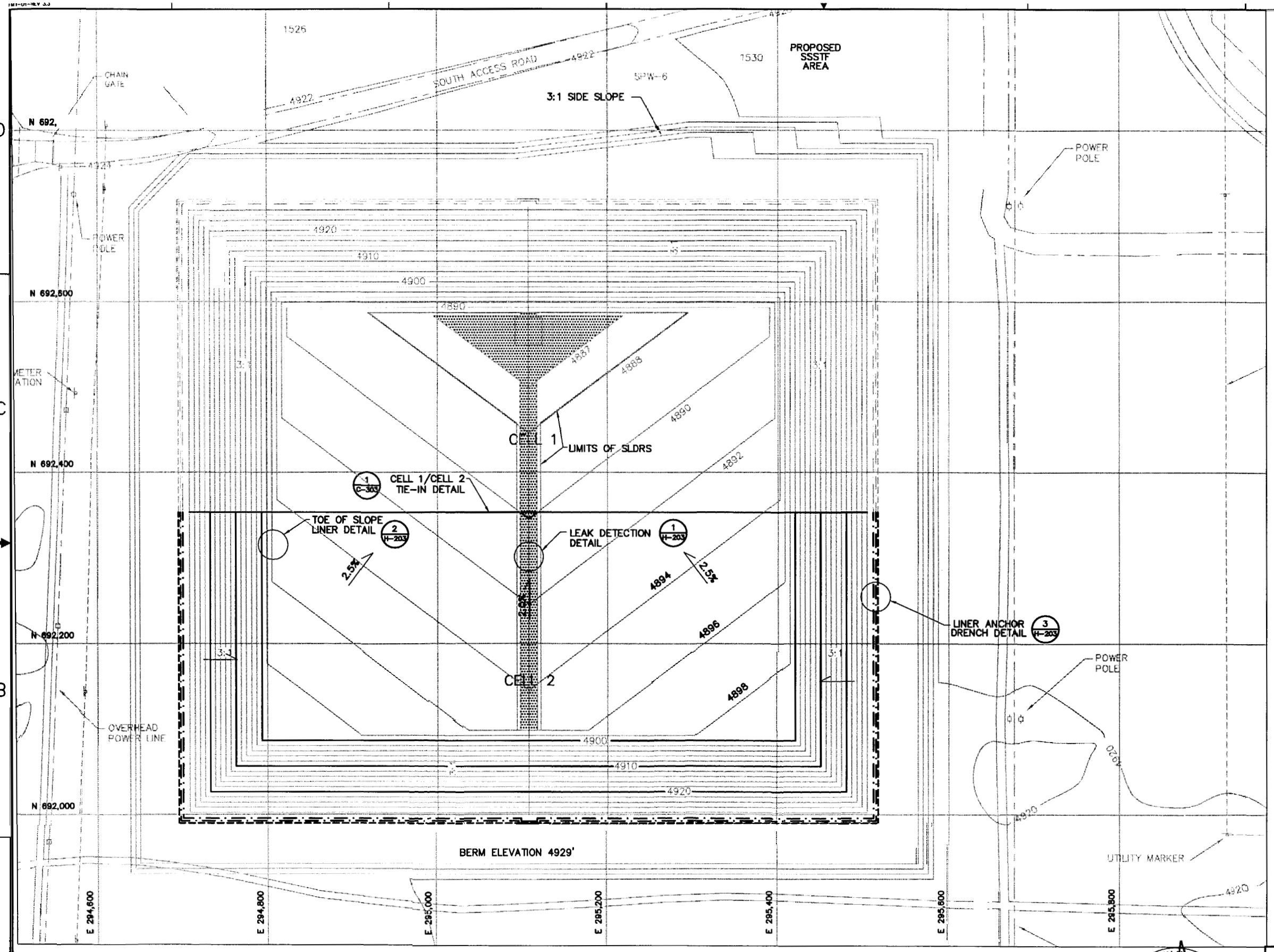

N

SCALE

0' 0 60' 120'

CONTOUR INTERVAL 2FT

INEEL Idaho National Engineering & Environmental Laboratory BECHTEL BWXT IDAHO, LLC

CH2MHILL MWH MONTGOMERY WATSON HARZA

INEEL CERCLA DISPOSAL FACILITY (ICDF)

CELL 2
GEOSYNTHETICS LINER SYSTEM PLAN

SUBCONTRACT NO.	S01-588058
REQUESTER:	
DESIGN:	PHILLIP CROUSE
DRAWN:	JULIE GATES
PROJECT NO.	
SPEC CODE	
FOR REVIEW/APPROVAL SIGNATURES SEE DAR NO.	DAR
EFFECTIVE DATE:	

PROFESSIONAL ENGINEER REGISTERED 9144 STATE OF IDAHO PHILLIP E. CROUSE

Phillip E. Crouse 5-7-02

SIZE	CAGE CODE	INDEX CODE NUMBER				DWG-	REV
		AREA	TYPE	CL	ORIG		0
D		B21	0500	02			
SCALE: AS SHOWN						CPP SHEET H-301	

REVISIONS		
REV	DESCRIPTION	EFFECTIVE DATE:
0	APPROVED FOR CONSTRUCTION	14 MAY 2002

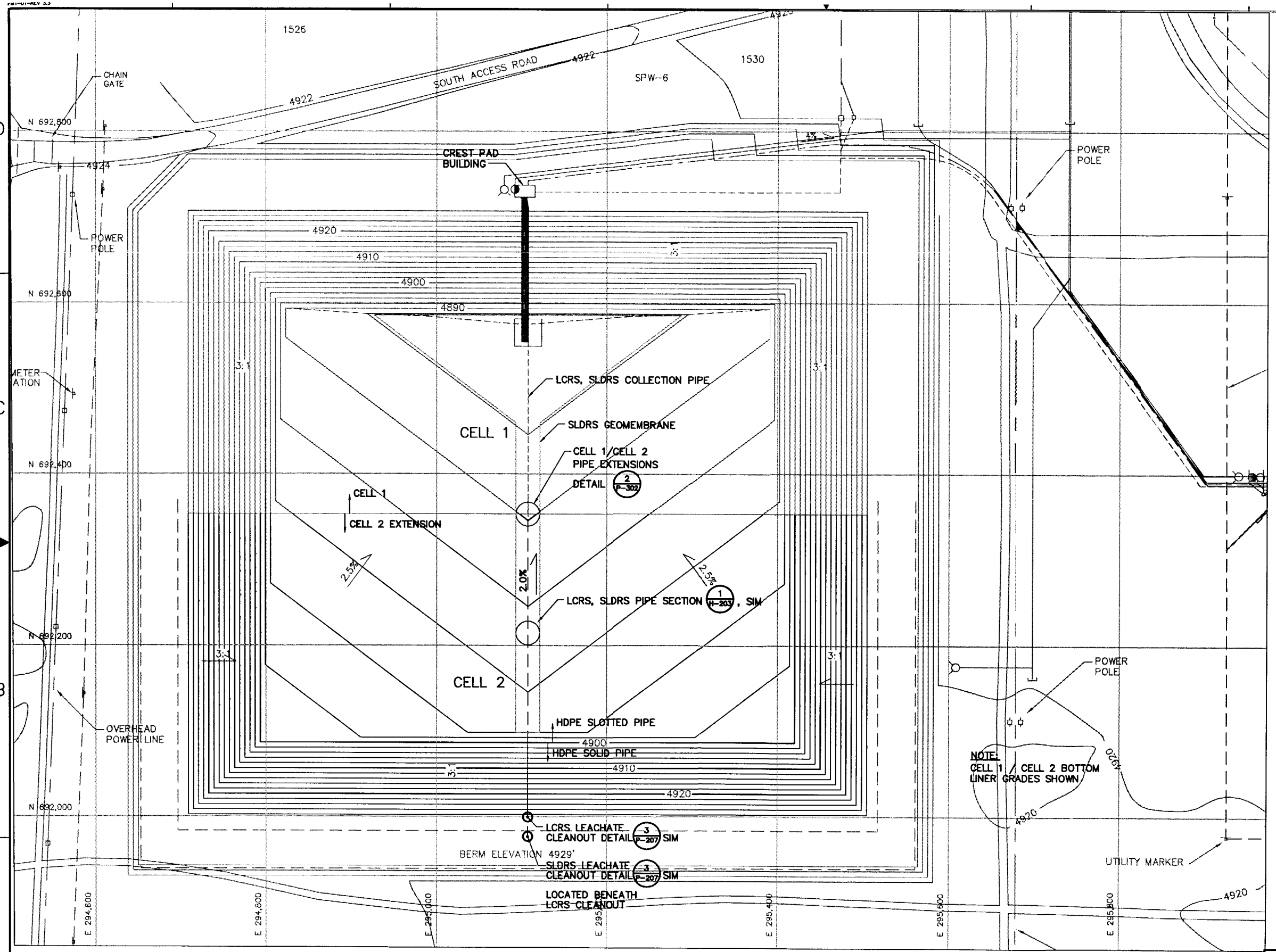

PROFESSIONAL ENGINEER REGISTERED 3755 STATE OF IDAHO LAWRENCE M. FETTRETHER 5/8/02

SUBCONTRACT NO.	S01-588058
REQUESTER:	
DESIGN:	BYRL THOMPSON
DRAWN:	JOSHUA PRETS
PROJECT NO.	
SPEC CODE	
FOR REVIEW/APPROVAL SIGNATURES SEE DAR NO.	DAR
EFFECTIVE DATE:	

INEEL (Idaho National Engineering & Environmental Laboratory) BECHTEL BWXT IDAHO, LLC

CH2MHILL MWH MONTGOMERY WATSON HARZA

INEEL CERCLA DISPOSAL FACILITY (ICDF)

CELL 2
LEACHATE COLLECTION PLAN

SIZE	CAGE CODE	INDEX CODE NUMBER AREA	TYPE	Q	DRG	DWG-	REV
D		B21	0500	02			0

SCALE: AS SHOWN CPP SHEET P-301

REVISIONS		
REV	DESCRIPTION	EFFECTIVE DATE:
0	APPROVED FOR CONSTRUCTION	14 MAY 2002

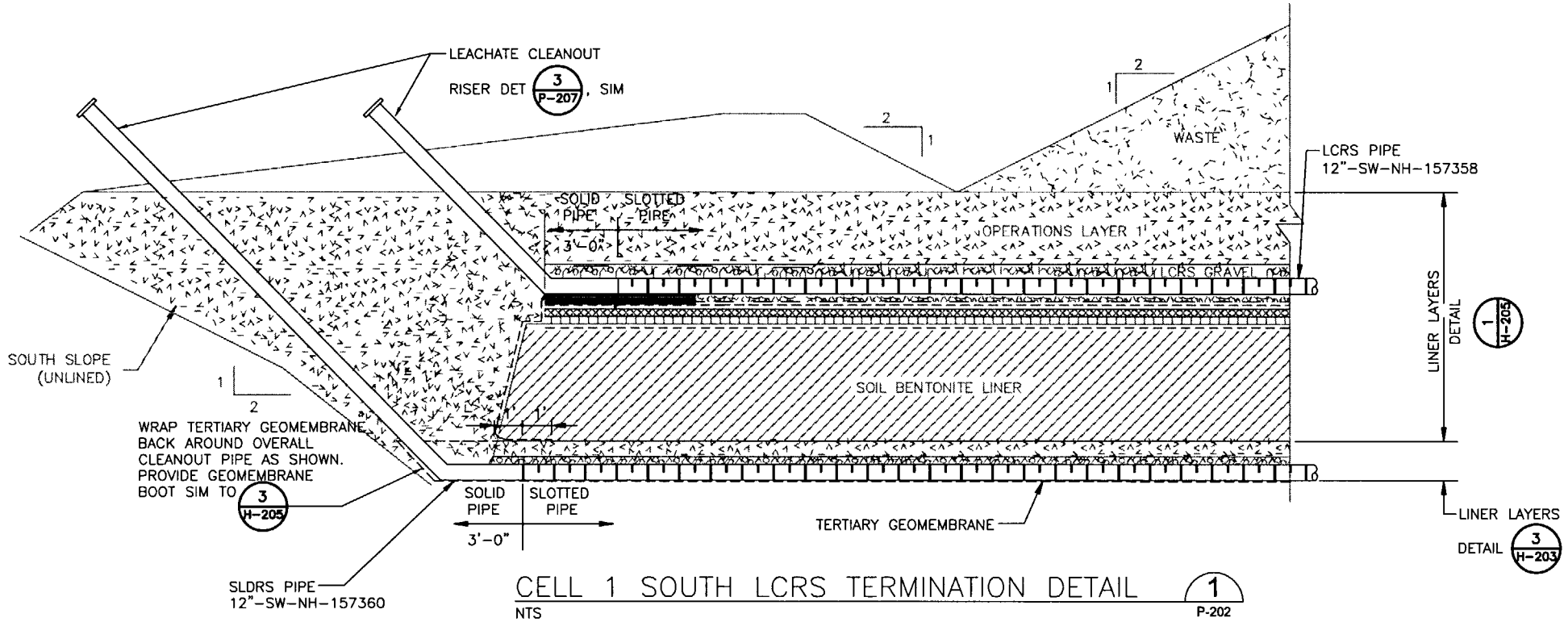

CELL 1 SOUTH LCRS TERMINATION DETAIL 1/P-202
NTS

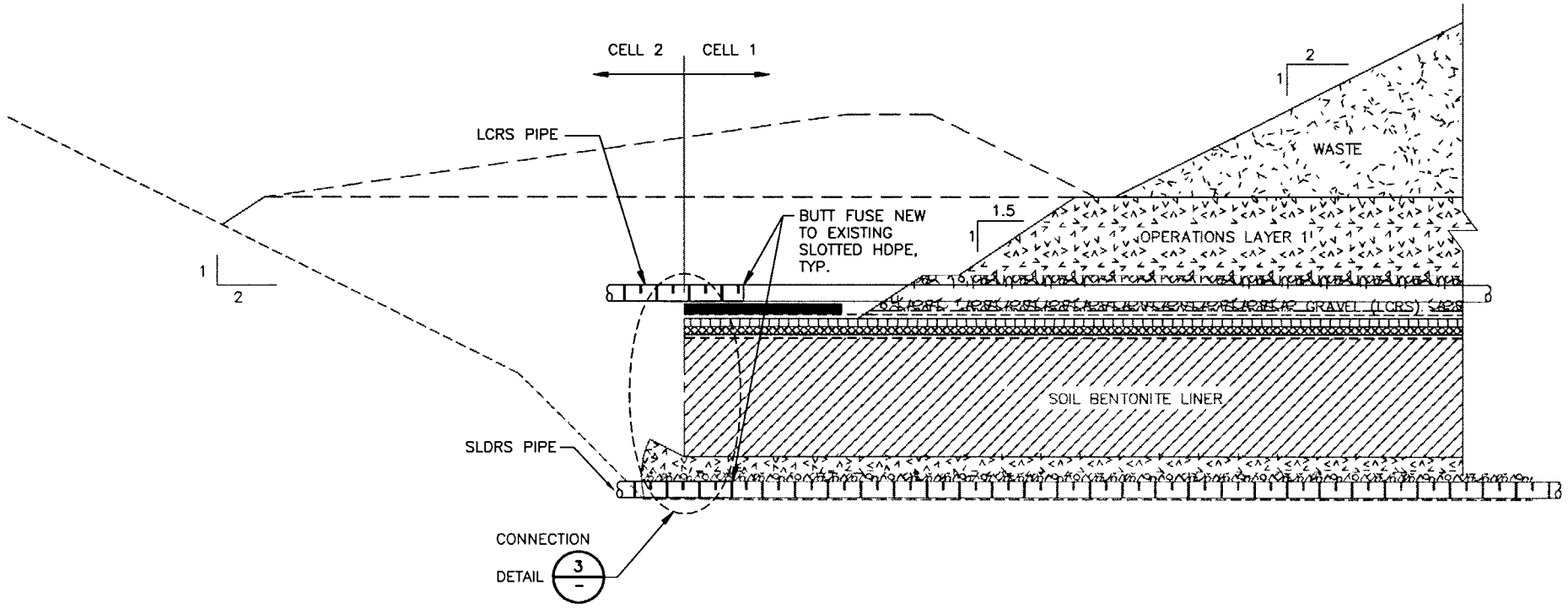

CELL 1 / CELL 2 LCRS TIE-IN DETAIL 2/P-301
NTS

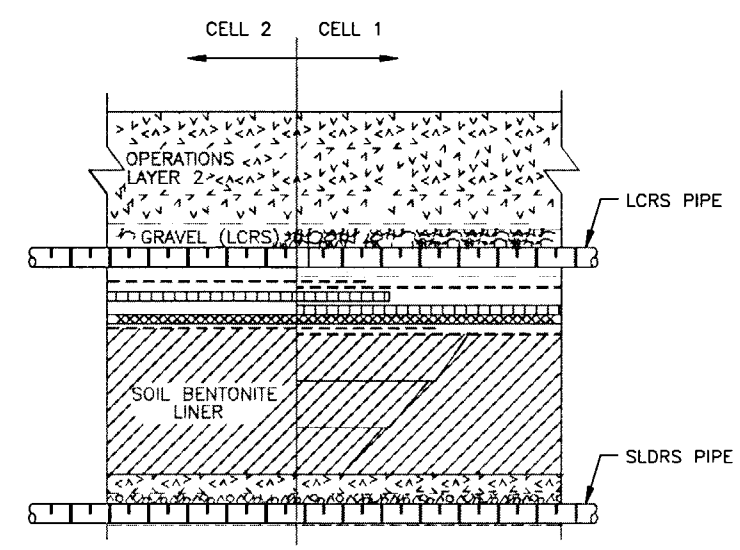

CELL 1 / CELL 2 LCRS CONNECTION DETAIL 3/-
NTS

NOTES:

1. SEE DWG H-205 FOR LINER CONNECTION DETAILS SHOWN SCREENED THIS DWG, TYPICAL.

PROFESSIONAL ENGINEER REGISTERED 3755 STATE OF IDAHO LAWRENCE M. FETTKETHER 5/8/02

SUBCONTRACT NO.	S01-588058
REQUESTER:	
DESIGN:	BYRL THOMPSON
DRAWN:	JOSHUA PRETS
PROJECT NO.	
SPEC CODE	
FOR REVIEW/APPROVAL SIGNATURES SEE DAR NO.	DAR
EFFECTIVE DATE:	

INEEL Idaho National Engineering & Environmental Laboratory BECHTEL BWXT IDAHO, LLC

CH2MHILL MWH MONTGOMERY WATSON HARZA

INEEL CERCLA DISPOSAL FACILITY (ICDF)

CELL 2
SECTIONS AND DETAILS

SIZE	CAGE CODE	INDEX CODE NUMBER AREA	TYPE	CL	ORIG	DWG-	REV
D		B21	0100	02			0

SCALE: AS SHOWN CPP SHEET P-302