Appendix Z

INEEL CERCLA Disposal Facility – Drawings

REVISIONS		
REV	DESCRIPTION	EFFECTIVE DATE:
0	APPROVED FOR CONSTRUCTION	14 MAY 2002

INEEL CERCLA DISPOSAL FACILITY
TITLE II DESIGN DRAWINGS

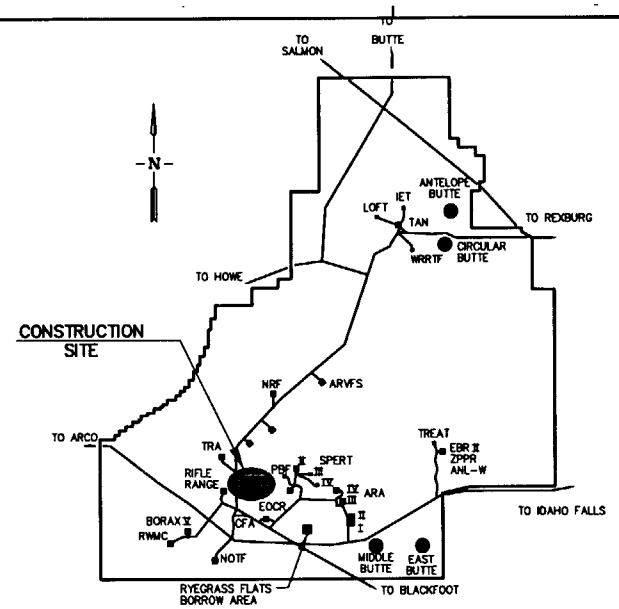

SITE MAP

NTS

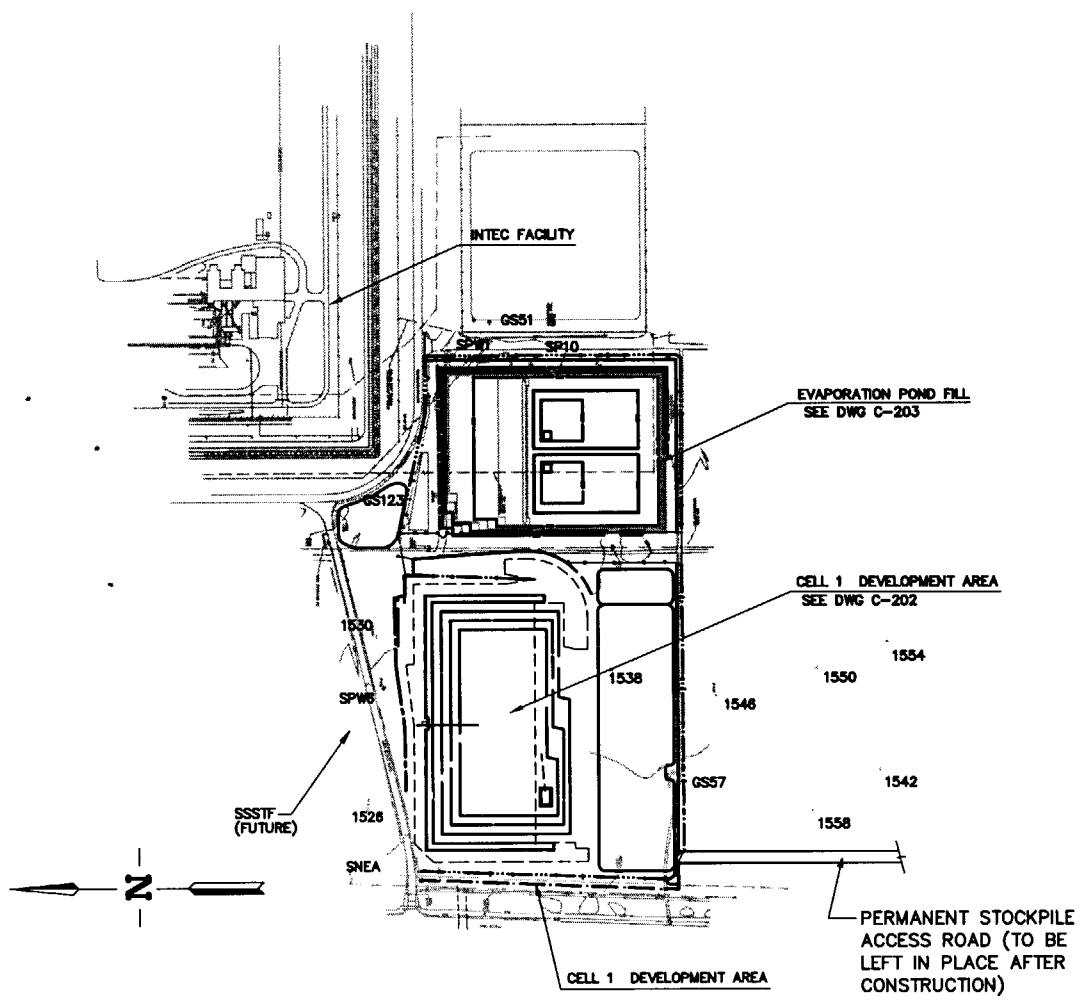

LOCATION MAP

NTS

NOTES:

1. THE DIMENSIONS, CONFIGURATION, AND LAYOUT OF THE ICDF FEATURES DEPICTED IN THIS DRAWING ARE FOR INFORMATIONAL PURPOSES ONLY. SEE DRAWINGS T-201 THROUGH EC-201 FOR LAYOUT, GRADING, AND EROSION CONTROL CONSTRUCTION REQUIREMENTS.
2. SEE DRAWING T-202 FOR TABLE OF SURVEY CONTROL POINTS SHOWN.

DRAWING INDEX

DWG. NO.	A-E SHEET NO.	REV	DRAWING TITLE	DWG NO.	A-E SHEET NO.	REV	DRAWING TITLE
	T-201	0	TITLE SHEET, DRAWING INDEX, AND SITE LOCATION MAPS		A/S-203	0	TRUCK LOADING PLAN SECTIONS AND DETAILS
	T-202	0	ABBREVIATIONS, LEGEND, AND GENERAL NOTES		A/S-204	0	STRUCTURAL NOTES AND DETAILS
	C-201	0	GENERAL SITE AND STOCKPILE PLAN		A/S-205	0	STRUCTURAL STANDARD DETAILS
	C-202	0	CELL 1 FINAL GRADING PLAN		E-201	0	OVERALL ELECTRICAL SITE PLAN
	C-203	0	EVAPORATION POND(S) AREA FINAL GRADING PLAN		E-202	0	CREST PAD BUILDINGS ELECTRICAL POWER AND LIGHTING PLANS
	C-204	0	GRADING SECTIONS AND DETAILS		E-203	0	ELECTRICAL ONE-LINE DIAGRAMS AND MCC ELEVATIONS
	C-205	0	GRADING SECTIONS AND DETAILS		E-204	0	ELECTRICAL CONTROL DIAGRAMS
	H-201	0	CELL 1 GEOSYNTHETICS LINER SYSTEMS PLAN		IN-201	0	LANDFILL PROCESS AND INSTRUMENTATION DIAGRAM (P&ID)
	H-202	0	EVAPORATION PONDS GEOSYNTHETICS LINER SYSTEMS PLAN		IN-202	0	EVAP POND(S) PROCESS AND INSTRUMENTATION DIAGRAM (P&ID)
	H-203	0	LINER SYSTEMS SECTIONS AND DETAILS		IN-203	0	PICS BLOCK DIAGRAM
	H-204	0	LINER SYSTEMS SECTIONS AND DETAILS		IN-204	0	CREST PAD BLDGS. CONTROL PNL ELS.
	H-205	0	LINER SYSTEMS SECTIONS AND DETAILS		IN-205	0	TYPICAL WIRING DIAGRAMS
	H-206	0	EVAPORATION POND(S) LINER SYSTEMS SECTIONS AND DETAILS		EC-201	0	EROSION CONTROL PLAN
	P-201	0	LEACHATE PIPING PLAN		C-301	0	CELL 2 EXCAVATION PLAN
	P-202	0	CELL 1 LEAK DETECTION/LEACHATE COLLECTION SYS. PLAN		C-302	0	CELL 2 FINAL GRADING PLAN
	P-203	0	EVAP POND(S) LEAK DETECT./LEACHATE COLLECT. SYS. PLAN		C-303	0	CELL 2 SECTIONS AND DETAILS
	P-204	0	LEAK DETECT./LEACHATE COLLECT. SECTIONS AND DETAILS		C-304	0	CELL 1 AND 2 FINAL COVER PLAN
	P-205	0	LANDFILL CREST PAD BUILDING MECHANICAL PLAN		C-305	0	FINAL COVER SECTIONS AND DETAILS
	P-206	0	EVAP POND(S) CREST PAD BUILDING MECHANICAL PLAN		H-301	0	CELL 2 GEOSYNTHETICS LINER SYSTEM PLAN
	P-207	0	LEAK DETECT./LEACHATE COLLECT. SECTIONS AND DETAILS		P-301	0	CELL 2 LEACHATE COLLECTION PLAN
	P-208	0	PIPING DETAILS		P-302	0	CELL 2 LEACHATE COLLECTION SECTIONS AND DETAILS
	P-209	0	LEACHATE COLLECTION SYSTEM DETAILS				
	P-210	0	LEACHATE COLLECTION SYSTEM DETAILS				
	A/S-201	0	CREST PAD BUILDING PLAN AND ELEVATIONS				
	A/S-202	0	CREST PAD BUILDING SECTIONS AND DETAILS				

PROFESSIONAL ENGINEER REGISTERED 8721 STATE OF IDAHO JAY G. DEHNER
5/7/02

SUBCONTRACT NO.	S01-588058
REQUESTER:	
DESIGN:	J DEHNER
DRAWN:	R MORGAN
PROJECT NO.	
SPEC CODE	
FOR REVIEW/APPROVAL SIGNATURES SEE DAR NO.	DAR
EFFECTIVE DATE:	

INEEL Idaho National Engineering & Environmental Laboratory BECHTEL BWXT IDAHO, LLC

CH2MHILL MWH MONTGOMERY WATSON HARZA

INEEL CERCLA DISPOSAL FACILITY (ICDF)
TITLE SHEET, DRAWING INDEX, AND SITE LOCATION MAPS

SIZE	CAGE CODE	INDEX CODE NUMBER AREA	TYPE	CL	ORIG	DWG-	REV
D		B21	0100	02			0

SCALE: NONE CPP SHEET T-201

REVISIONS		
REV	DESCRIPTION	EFFECTIVE DATE:
0	APPROVED FOR CONSTRUCTION	14 MAY 2002

GENERAL NOTES

1. PROJECT COORDINATES ARE BASED ON NAD27 IDAHO EAST ZONE STATE PLANE, CORRECTED FOR ELEVATION AND GRID. VERTICAL DATUM IS NGVD29. TO CONVERT PROJECT COORDINATES TO STATE PLANE, DIVIDE PROJECT COORDINATES BY 1.00024057
2. SUBCONTRACTOR AND SUPPLIER PRIMARY ACCESS TO SITE VIA LINCOLN BLVD.
3. SUBCONTRACTOR PARKING AREA IS SHOWN ON DWG C-201. NO OVERNIGHT PARKING ALLOWED IN THIS AREA. EQUIPMENT PARKING AND SERVICING TO BE PERFORMED IN STAGING AREA SHOWN ON DWG C-201.
4. STAGE I CONSTRUCTION PERFORMED IN 2001 CONSTRUCTION SEASON. THIS STAGE II CONSTRUCTION DOCUMENTS ARE BASED ON STAGE I RECORD DRAWING OR CONSTRUCTION INFORMATION, WHERE AVAILABLE DURING DEVELOPMENT.
5. APPROXIMATE LOCATION OF PERMANENT STOCKPILE AT THE FOLLOWING CORNER COORDINATES:

NORTHING	EASTING
690400	295050
689900	295050
690400	294550
689900	294550

LEGEND

- ▲1538 SURVEY CONTROL POINT
- GS51 MONITORING WELL
- 4920 EXISTING GROUND CONTOUR
- 4920 FINISH GRADE CONTOUR
- EXISTING OVERHEAD POWER
- EXISTING FENCE
- NEW FENCE
- EXISTING BURIED SERVICE WASTE LINE
- EXISTING ROAD
- N 693,000 E 295,000 PROJECT COORDINATES SEE NOTE 1
- X LAYOUT CONTROL POINT
- EXISTING POWER POLE
- EXISTING POLE MOUNTED SIGN
- GRADE/SLOPE DIRECTION
- EXISTING DRAINAGE DITCH
- PREPARED SUBGRADE
- SOIL BENTONITE LINER OR BASE SOIL
- GEOCOMPOSITE
- GEOSYNTHETIC CLAY LINER
- GRAVEL
- OPERATIONS LAYER

PIPE AND FITTING SYMBOLS

- EXISTING PIPE (SCREENED)
- NEW PIPE
- EXISTING PIPE TO BE ABANDONED
- EXISTING PIPE TO BE REMOVED
- WELDED JOINT
- ELBOW UP
- ELBOW DOWN
- TEE UP
- TEE DOWN
- LATERAL UP
- LATERAL DOWN
- CONCENTRIC REDUCER
- ECCENTRIC REDUCER
- UNION
- BLIND FLANGE
- PLUG
- CAP
- ELBOW, 90 DEGREE
- CROSS
- TEE
- ELBOW, 45 DEGREE

HVAC SYMBOLS

- SUPPLY DUCT (SECTION)
- INTAKE, RETURN, OR EXHAUST DUCT (SECTION)
- THERMOSTAT
- (200) 200 SCFM

VALVE SYMBOLS

- GATE
- BALL
- SWING CHECK
- HOSE VALVE
- NON FREEZE HOSE VALVE X = NO. IN SPECS
- NON FREEZE HOSE VALVE WITH HOSE RACK X = NO. IN SPECS
- PRESSURE RELIEF
- AIR AND/OR VACUUM RELEASE (VARV)

SECTION AND DETAIL DESIGNATION

POINT AT WHICH SECTION OR DETAIL IS TAKEN

LETTER INDICATES DESIGNATION OF SECTION

C C-105

INDICATES DRAWING WHERE SECTION IS SHOWN

NUMBER INDICATES DESIGNATION OF DETAIL

2 —

INDICATES DRAWING WHERE DETAIL IS SHOWN, — INDICATES DETAIL IS SHOWN ON SAME DRAWING AS TAKEN, TYP.

POINT AT WHICH SECTION OR DETAIL IS SHOWN

LETTER INDICATES DESIGNATION OF SECTION

A C-105 SECTION NTS — NOT TO SCALE

INDICATES DRAWING WHERE SECTION IS TAKEN

NUMBER INDICATES DESIGNATION OF DETAIL

2 C-105 DETAIL 1"=5'-0" — SCALE

INDICATES DRAWING WHERE DETAIL IS TAKEN

STRUCTURAL ABBREVIATIONS

AB	ANCHOR BOLT	FD	FLOOR DRAIN	RC	REINFORCED CONCRETE
AHR	ANCHOR	FDN	FOUNDATION	REINF	REINFORCE
AL	ALUMINUM	FG	FINISHED GRADE	RST	REINFORCING STEEL
ALTN	ALTERNATE	FTG	FOOTING	SIM	SIMILAR
APVD	APPROVED	GALV	GALVANIZE (HOT DIP)	SPECS	SPECIFICATIONS
BOT	BOTTOM	GVL	GRAVEL	SQ	SQUARE
BF	BOTTOM FACE	HAS.	HEADED ANCHOR STUD	STD	STANDARD
BM	BEAM	HDR	HEADER	STIF	STIFFENER
BRG	BEARING	HORIZ	HORIZONTAL	STL	STEEL
C TO C	CENTER TO CENTER	I.F.	INSIDE FACE	STR	STRAIGHT
CJ	CONSTRUCTION JOINT	LNTL	LINTEL	STRUCT	STRUCTURES
CL	CENTER LINE	LONG.	LONGITUDINAL	SYMM	SYMMETRICAL
CLR	CLEARANCE	MAX	MAXIMUM	T&B	TOP AND BOTTOM
COL	COLUMN	MB	MACHINE BOLTS	TC	TOP OF CONCRETE
CONC	CONCRETE	MIN	MINIMUM	TF	TOP FACE
CONN	CONNECTION	NIC	NOT IN CONTRACT	THK	THICK
CONT	CONTINUOUS	NTS	NOT TO SCALE	TRANSV	TRANSVERSE
CTR	CENTER	OC	ON CENTER	TST	TOP OF STEEL
DBA	DEFORMED BAR ANCHOR	O.F.	OUTSIDE FACE	TW	TOP OF WALL
DIA	DIAMETER	O TO O	OUT TO OUT	TYP	TYPICAL
DIR	DIRECTION	OPNG	OPENING	VERT	VERTICAL
DWG	DRAWING	PJF	PREMOLDED JOINT FILLER	WS	WATERSTOP OR WATER SURFACE
EA	EACH	PLYWD	PLYWOOD	WWF	WELDED WIRE FABRIC
EF	EACH FACE	PRCST	PRECAST		
EL	ELEVATION	P	PILASTER		
EQL SP	EQUALLY SPACED				
EW	EACH WAY				
EXP JT	EXPANSION JOINT				
EXST	EXISTING				

ABBREVIATIONS

@	AT	MFR	MANUFACTURER
APPROX	APPROXIMATE	MIN	MINIMUM
BLVD	BOULEVARD	NO	NUMBER
CERCLA	COMPREHENSIVE ENVIRONMENTAL RESPONSE COMPENSATION AND LIABILITY ACT	NTS	NOT TO SCALE
CMP	CORRUGATED METAL PIPE	O.C.	ON CENTER
CSA	CONTAMINANT STORAGE AREA	PC	POINT OF CURVATURE
DBL	DOUBLE	PLDRS	PRIMARY LEACHATE DETECTION RECOVERY SYSTEM
DWG	DRAWING	PT	POINT OF TANGENCY
ELEV	ELEVATION	R	RADIUS
EXIST	EXISTING	REF	REFERENCE
FT	FOOT/FEET	RD	ROAD
GCL	GEOSYNTHETIC CLAY LINER	S.F.	SQUARE FOOT/FEET
HDPE	HIGH DENSITY POLYETHYLENE	SLDRS	SECONDARY LEACHATE DETECTION RECOVERY SYSTEM
I.E.	INVERT ELEVATION	SSSTF	STAGING, STORAGE, SIZING, AND TREATMENT FACILITY
ICDF	INEEL CERCLA DISPOSAL FACILITY	TEMP	TEMPORARY
LCS	LEACHATE COLLECTION SYSTEM	THK	THICK/THICKNESS
LDS	LEACHATE DETECTION SYSTEM	TYP	TYPICAL
LCRS	LEACHATE COLLECTION RECOVERY SYSTEM	VARV	VACUUM AIR RELEASE VALVE
LDRS	LEACHATE DETECTION RECOVERY SYSTEM		

SURVEY CONTROL TABLE

WELL NO./ SURVEY CONTROL POINT	PROJECT NORTHING	PROJECT EASTING	NGVD29 ELEV	DESCRIPTION
GS51	692,503.870	296,413.440	4918.74	USGS 51 WELL BRASS CAP
GS57	691,919.716	294,942.147	4922.50	USGS 57 WELL BRASS CAP
GS123	692,687.214	295,850.627	4919.22	USGS 123 WELL BRASS CAP
SP10	692,376.984	296,278.547	4917.89	SWPP 10 WELL BRASS CAP
SPW1	692,431.900	296,303.240	4917.84	PW1 WELL BRASS CAP
SPW6	692,863.690	295,222.085	4920.59	PW6 WELL BRASS CAP
SNEA	692,976.235	294,598.713	4922.12	SNEAK REBAR W/YELLOW CAP
1526	692,917.904	294,853.695	4921.63	SPT-1 BRASS CAP
1530	692,888.161	295,389.972	4919.28	CHEMB-1 BRASS CAP
1538	692,127.506	295,277.940	4920.93	CHEMB-2 BRASS CAP
1542	691,235.020	294,947.685	4923.10	CHEMB-3 BRASS CAP
1546	691,774.790	295,190.788	4921.91	SPT-3 BRASS CAP
1550	691,441.621	295,281.496	4922.06	GSB-2 BRASS CAP
1554	691,209.551	295,369.285	4922.68	SPT-5 BRASS CAP
1558	691,455.055	294,816.564	4923.17	SPT-4 BRASS CAP

PROFESSIONAL ENGINEER REGISTERED STATE OF IDAHO JAY G. DEHNER 5/7/02

INEEL Idaho National Engineering & Environmental Laboratory BECHTEL BWXT IDAHO, LLC

CH2MHILL MWH MONTGOMERY WATSON HARZA

INEEL CERCLA DISPOSAL FACILITY (ICDF)
ABBREVIATIONS, LEGEND
AND GENERAL NOTES

SUBCONTRACT NO.	S01-588058
REQUESTER:	
DESIGN:	J DEHNER
DRAWN:	R MORGAN
PROJECT NO.	
SPEC CODE	
FOR REVIEW/APPROVAL SIGNATURES SEE DAR NO.	DAR
EFFECTIVE DATE:	

SIZE D | CAGE CODE | INDEX CODE NUMBER: AREA B21 | TYPE 0100 | CL 01 | ORG | DWG- | REV 0

SCALE: NONE | CPP | SHEET T-202

REVISIONS		
REV	DESCRIPTION	EFFECTIVE DATE:
0	APPROVED FOR CONSTRUCTION	14 MAY 2002

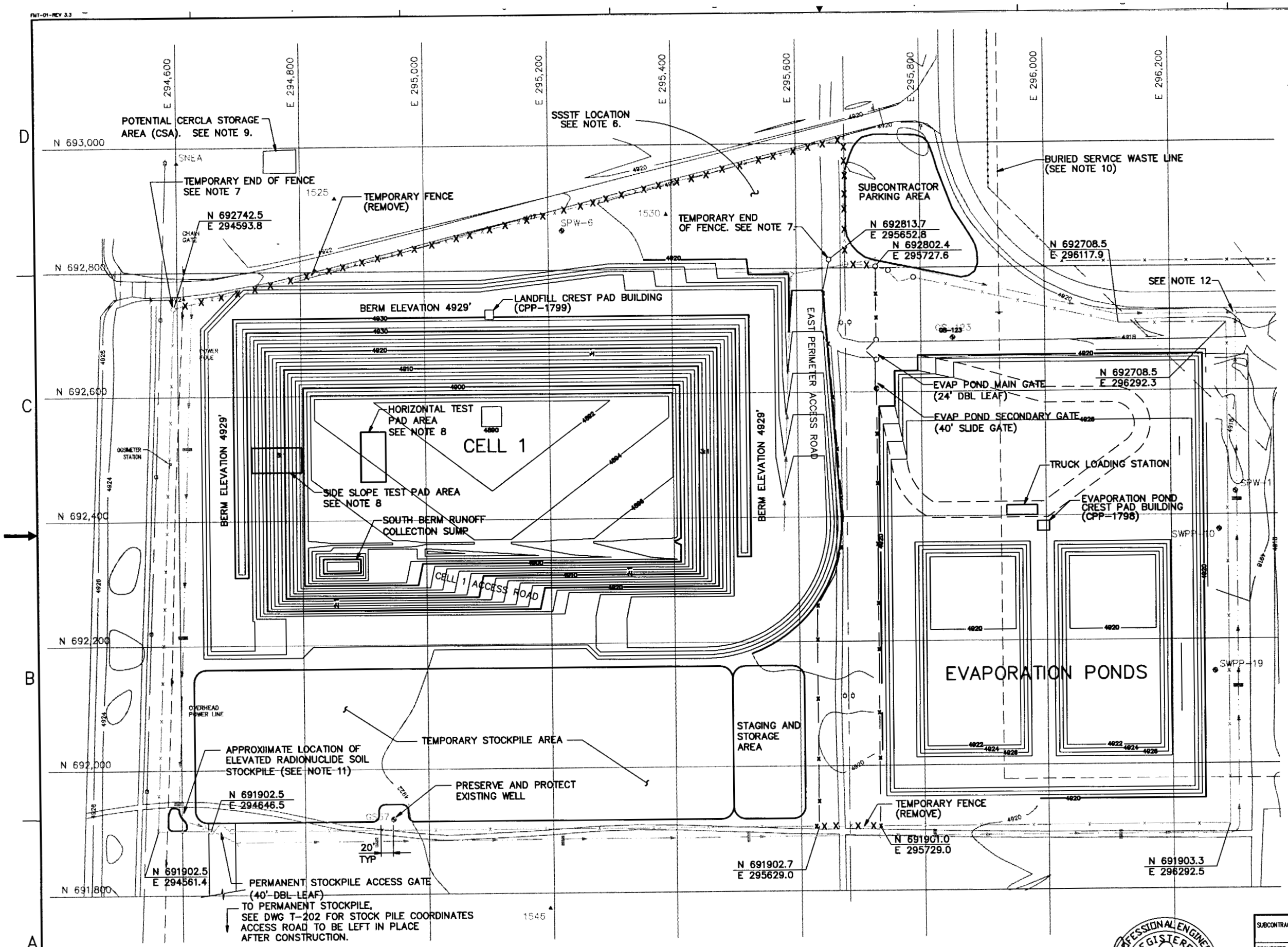

NOTES:

1. GRADES SHOWN FOR CELL 1 AND EVAPORATION PONDS ARE TOP OF FINAL GRADES. SEE C-202 AND C-203 FOR FINAL GRADING PLANS FOR THESE FACILITIES.
2. TEMPORARY STOCKPILE AREA FOR STORAGE AND PROCESSING OF EXCAVATION MATERIAL FOR OPERATIONS LAYER, LCRS DRAIN GRAVEL, AND GRAVEL SURFACING MATERIALS.
3. PERMANENT STOCKPILE AREA LOCATION IS WITHIN APPROXIMATE AOC BOUNDARY. SEE T-202 FOR COORDINATES.
4. EXCAVATED MATERIAL FROM CELL 1 NOT USED IN CONSTRUCTION TO BE PLACED IN PERMANENT STOCKPILE AREA.
5. SEE DRAWING T-202 FOR WELL AND SURVEY CONTROL POINT TABLE.
6. LOCATION OF SSSTF TO BE FINALIZED AND COORDINATED WITH ICDF, BASED ON LOCATION OF ICDF CELL AND FINAL COVER AS DEVELOPED IN THE DESIGN.
7. FENCE TO BE EXTENDED AROUND PERIMETER OF SSSTF BY OTHERS, ONCE SSSTF LOCATION IS FINALIZED.
8. FINAL LOCATION OF HORIZONTAL AND SIDE SLOPE SOIL BENTONITE LINER TEST PAD TO BE FIELD DETERMINED DURING CONSTRUCTION TO AVOID INTERFERENCE WITH ONGOING CONSTRUCTION ACTIVITIES.
9. POTENTIAL CSA TO BE FIELD LOCATED DURING CONSTRUCTION.
10. BURIED SERVICE WASTE LINE ABANDONED IN PLACE AND PLUGGED BY OTHERS.
11. SEE WASTE MANAGEMENT PLAN FOR DESCRIPTION OF SOIL IN THIS STOCK PILE.
12. DISCHARGE OF CLEAN STORMWATER WILL OCCUR TO EXISTING DISCHARGE CHANNELS VIA A LEVEL SPREADER AT THE NORTHEAST PART OF THE SITE.

N

SCALE

80' 0' 80' 160'

CONTOUR INTERVAL 2FT.

PROFESSIONAL ENGINEER REGISTERED STATE OF IDAHO JAY G. DEHNER 5/7/02

INEEL Idaho National Engineering & Environmental Laboratory BECHTEL BWXT IDAHO, LLC

CH2MHILL MWH MONTGOMERY WATSON HARZA

INEEL CERCLA DISPOSAL FACILITY (ICDF)

GENERAL SITE AND STOCKPILE PLAN

SUBCONTRACT NO.	S01-588058
REQUESTER:	
DESIGN:	J DEHNER
DRAWN:	R MORGAN
PROJECT NO.	
SPEC CODE	
FOR REVIEW/APPROVAL SIGNATURES SEE DAR NO.	DAR
EFFECTIVE DATE:	

SIZE	CAGE CODE	INDEX CODE NUMBER AREA	TYPE	CL	ORIG	DWG-	REV
D		B21	0100	02			0

SCALE: AS SHOWN CPP SHEET C-201

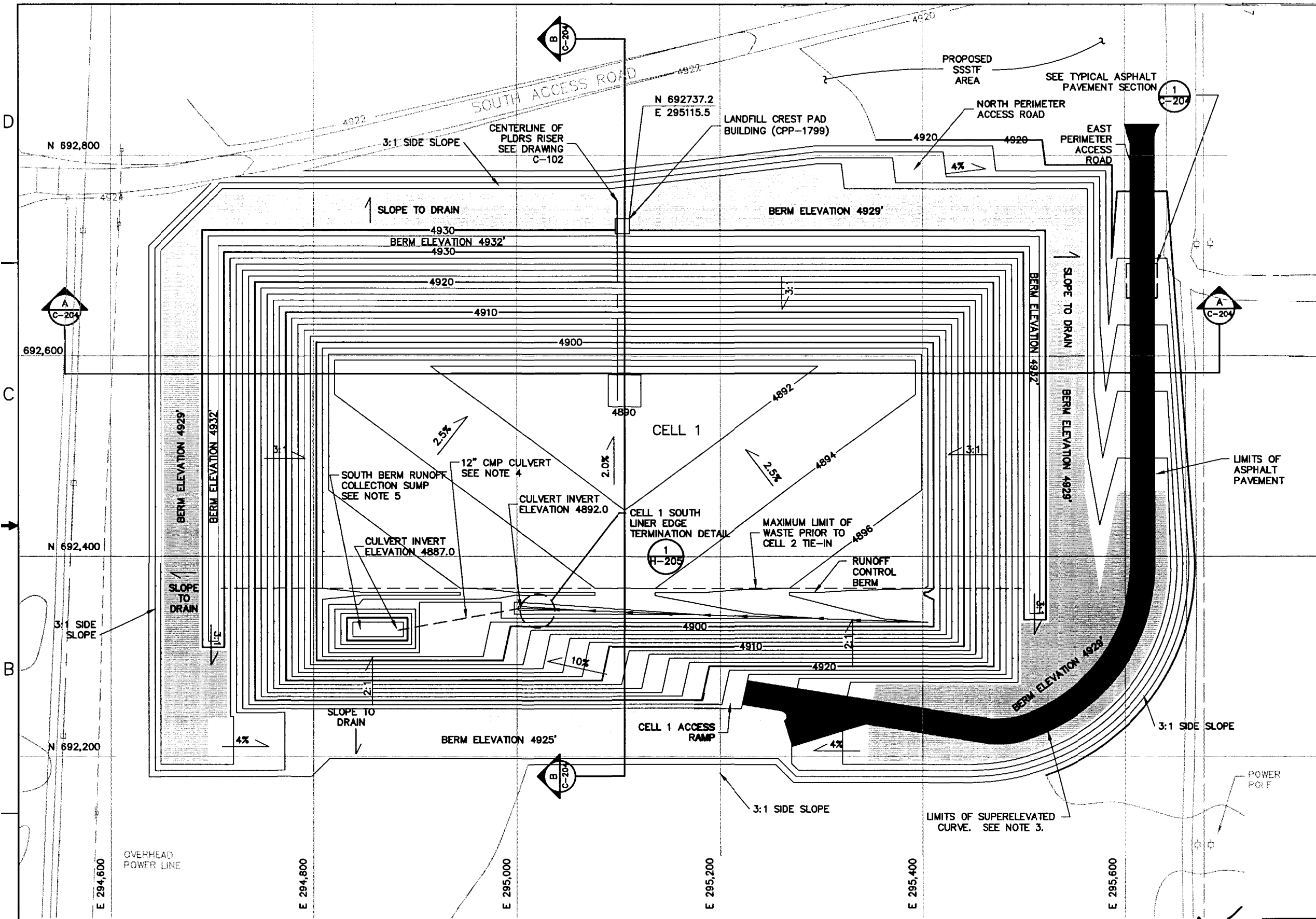

REVISIONS		
REV	DESCRIPTION	EFFECTIVE DATE:
0	APPROVED FOR CONSTRUCTION	14 MAY 2002

NOTES:

1. FINAL GRADES SHOWN REPRESENT TOP OF THE OPERATIONS LAYER AND TOP OF BERM GRAVEL SURFACE.
2. SLOPE TO DRAIN AREAS SHALL BE A MINIMUM OF 1%.
3. GRADES FOR SUPERELEVATED CURVE TO BE DETERMINED IN THE FIELD.
4. CULVERT SHALL BE 14-GAGE MINIMUM GALVANIZED OR ALUMINIZED CORRUGATED METAL PIPE WITH STANDARD CONNECTION BAND AT ALL JOINTS. LOCATION OF THE BURIED RUNOFF PIPE SHALL BE FIELD VERIFIED.
5. SUMP DIMENSIONS SHALL BE FIELD VERIFIED. PROVIDE MINIMUM BOTTOM SURFACE AREA OF 750 SQUARE FEET. CARE SHALL BE USED WHEN EXCAVATING THE SUMP TO AVOID DAMAGING THE SOUTH EDGE OF THE LINER SYSTEM.
6. AS-BUILT GRADES ARE NOT SHOWN ON THIS PLAN, REFER TO RECORD DRAWINGS FOR PHASE 1 CONSTRUCTION FOR AS-BUILT SUBGRADE FOR THIS FACILITY.

LEGEND:

- LIMITS OF SUPERELEVATED ACCESS ROAD SECTION
- LIMITS OF TYPICAL ASPHALT PAVEMENT SECTION
- LIMITS OF TOP OF BERM

N

SCALE

50' 0 50' 100'

CONTOUR INTERVAL 2FT.

PROFESSIONAL ENGINEER REGISTERED STATE OF IDAHO PHILLIP E. CROUSE 9144

INEEL Idaho National Engineering & Environmental Laboratory BECHTEL BWXT IDAHO, LLC

CH2MHILL MWH MONTGOMERY WATSON HARZA

INEEL CERCLA DISPOSAL FACILITY (ICDF)

CELL 1
FINAL GRADING PLAN

SUBCONTRACT NO.	S01-588058
REQUESTER:	
DESIGN:	PHILLIP CROUSE
DRAWN:	NICOLE GONZALEZ
PROJECT NO.	
SPEC CODE	
FOR REVIEW/APPROVAL SIGNATURES SEE DAR NO.	DAR
EFFECTIVE DATE:	

SIZE	CAGE CODE	INDEX CODE NUMBER AREA	TYPE	CL	ORIG	DWG-	REV
D		B21	0100	02			0

SCALE: AS SHOWN CPP SHEET C-202

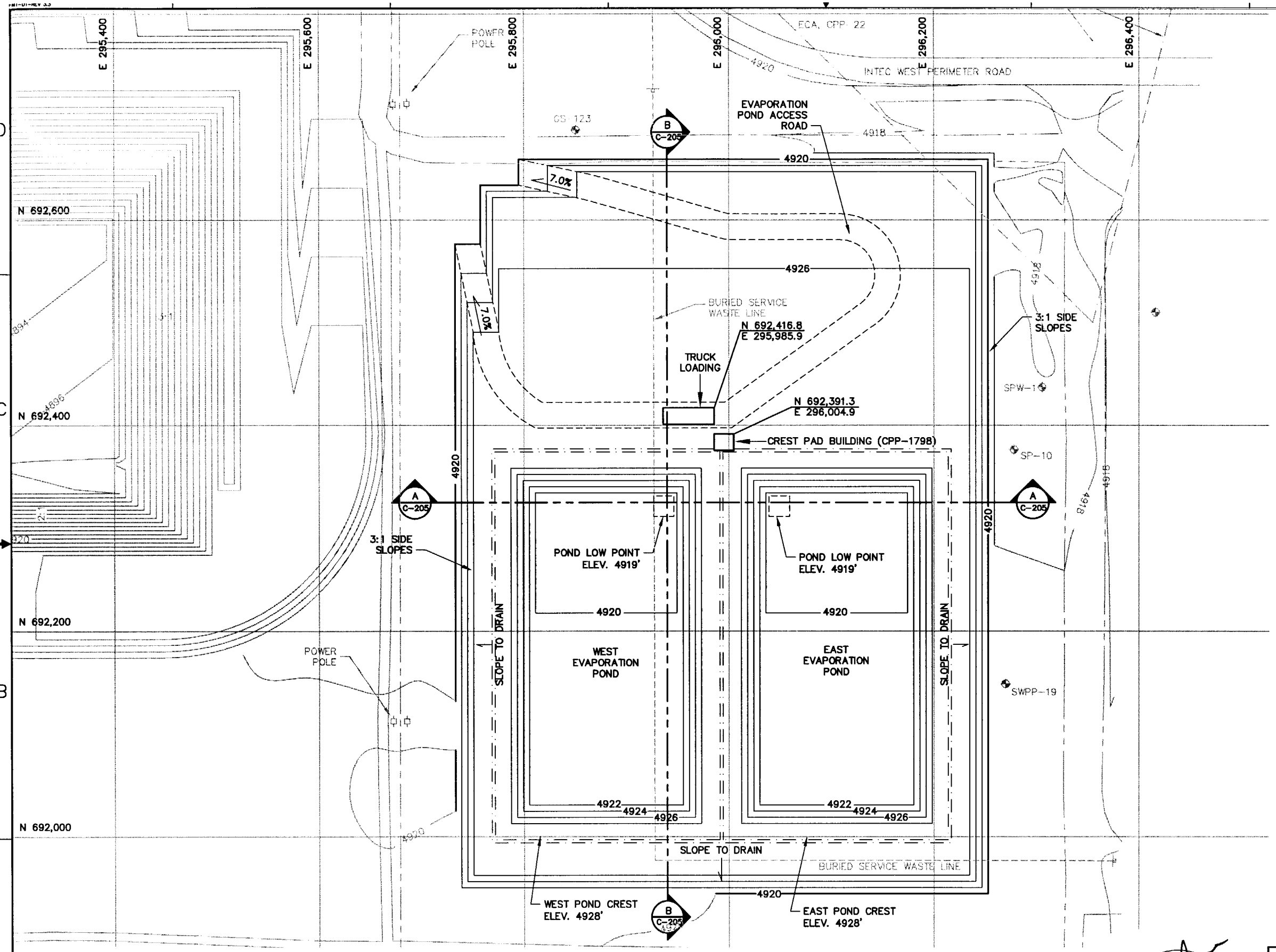

REVISIONS		
REV	DESCRIPTION	EFFECTIVE DATE:
0	APPROVED FOR CONSTRUCTION	14 MAY 2002

NOTES:

1. FINAL GRADES SHOWN REPRESENT TOP OF THE ACCESS ROAD GRADE FOR PADS AND ROAD AREAS; TOP OF UPPER SACRIFICIAL GEOMEMBRANE FOR PONDS. SEE THE PHASE 1 AS-BUILT CONSTRUCTION RECORD DRAWING FOR AS-BUILT GRADES OF SUBGRADE SURFACE.
2. SLOPE TO DRAIN AREAS SHALL BE A MINIMUM OF 1%.
3. AS-BUILT GRADES ARE NOT SHOWN ON THIS PLAN, REFER TO RECORD DRAWINGS FOR PHASE 1 CONSTRUCTION FOR AS-BUILT SUBGRADE ELEVATIONS FOR THIS FACILITY.

N

SCALE
50' 0 50' 100'
CONTOUR INTERVAL 2FT.

PROFESSIONAL ENGINEER REGISTERED 9147 STATE OF IDAHO PHILLIP E. CROUSE

SUBCONTRACT NO.	S01-588058
REQUESTER:	
DESIGN:	PHILLIP CROUSE
DRAWN:	MATT MATHISEN
PROJECT NO.	
SPEC CODE	
FOR REVIEW/APPROVAL SIGNATURES SEE DAR NO.	DAR
EFFECTIVE DATE:	

INEEL Idaho National Engineering & Environmental Laboratory BECHTEL BWXT IDAHO, LLC

CH2MHILL MWH MONTGOMERY WATSON HARZA

INEEL CERCLA DISPOSAL FACILITY (ICDF)

EVAPORATION POND(S) AREA
FINAL GRADING PLAN

SIZE	CAGE CODE	INDEX CODE NUMBER AREA	TYPE	CL	ORIG	DWG-	REV
D		B21	0100	02			0

SCALE: AS SHOWN CPP SHEET C-203

REVISIONS		
REV	DESCRIPTION	EFFECTIVE DATE:
0	APPROVED FOR CONSTRUCTION	14 MAY 2002

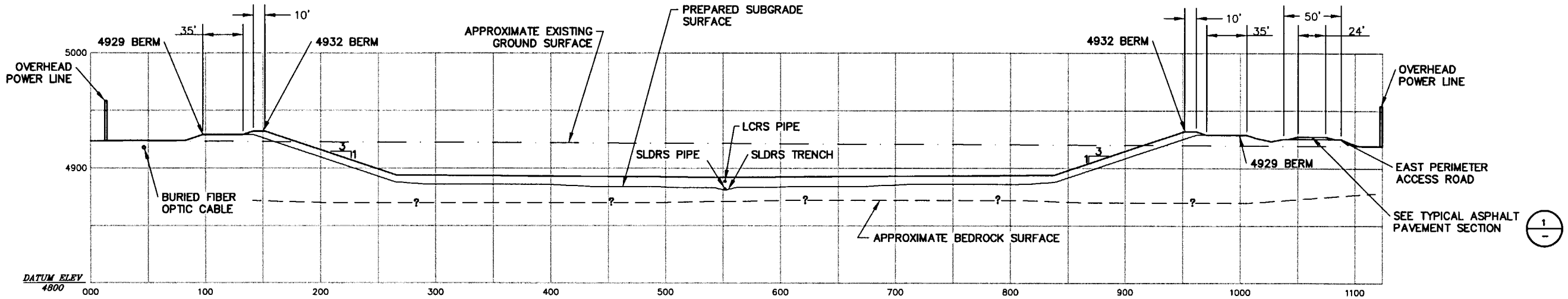

A C-202 EAST-WEST LANDFILL CROSS-SECTION

SCALE 50' 0 50' 100'

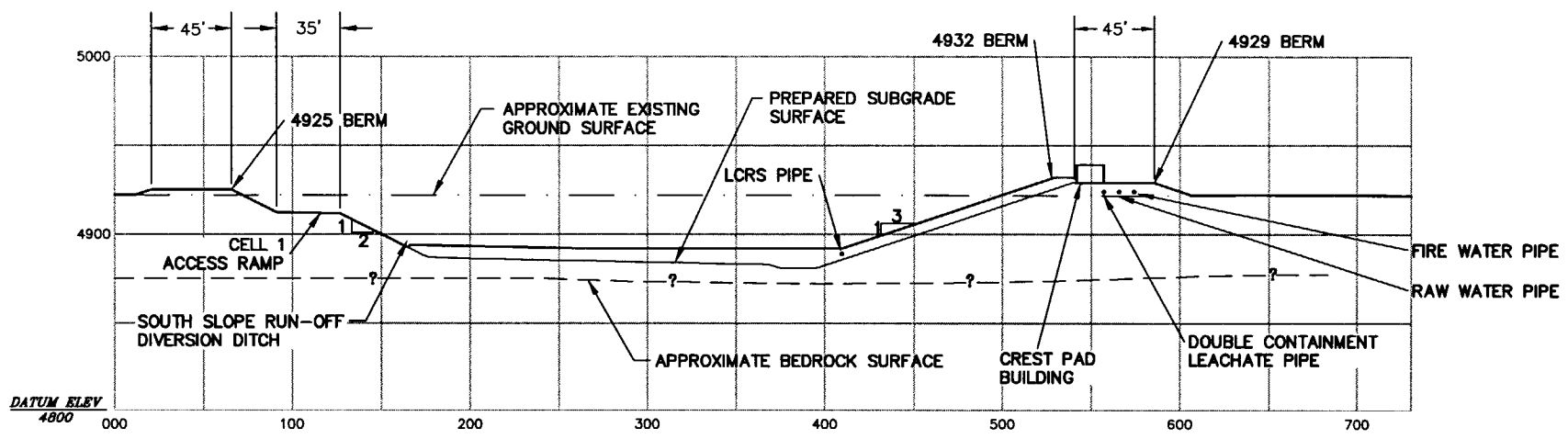

B C-202 SOUTH-NORTH LANDFILL CROSS-SECTION

SCALE 50' 0 50' 100'

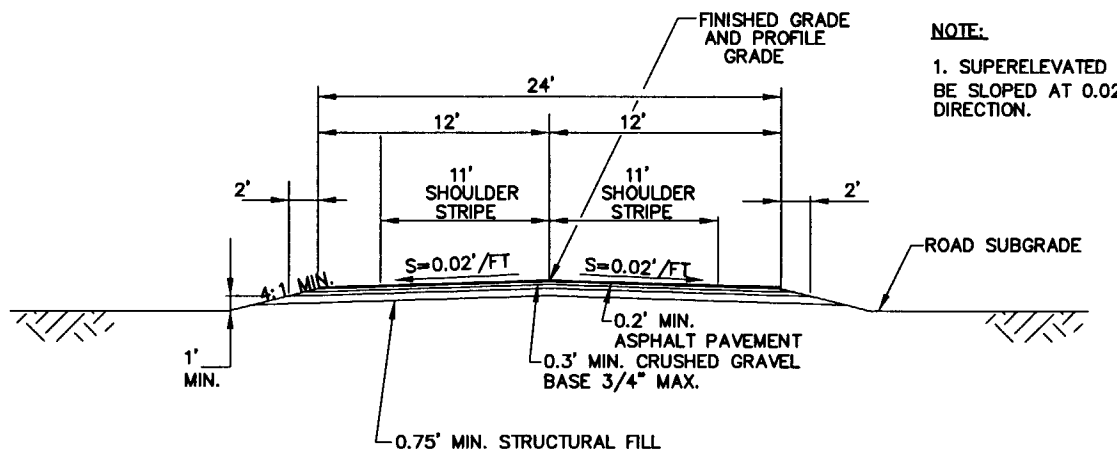

NOTE:

1. SUPERELEVATED CURVES SHALL BE SLOPED AT 0.02'/FT IN ONE DIRECTION.

1 C-202 TYPICAL ASPHALT PAVEMENT SECTION

NTS

PROFESSIONAL ENGINEER REGISTERED STATE OF IDAHO PHILLIP E. CROUSE 8244

SUBCONTRACT NO.	S01-588058
REQUESTER:	
DESIGN:	PHILLIP CROUSE
DRAWN:	NICOLE GONZALEZ
PROJECT NO.	
SPEC CODE	
FOR REVIEW/APPROVAL SIGNATURES SEE DAR NO.	DAR
EFFECTIVE DATE:	

INEEL Idaho National Engineering & Environmental Laboratory BECHTEL BWXT IDAHO, LLC

CH2MHILL MWH MONTGOMERY WATSON HARZA

INEEL CERCLA DISPOSAL FACILITY (ICDF)

GRADING SECTIONS AND DETAILS

SIZE	CAGE CODE	INDEX CODE NUMBER AREA	TYPE	CL	ORG	DWG-	REV
D		B21	0100	02			0

SCALE: AS SHOWN CPP SHEET C-204

PAGE:

REVISIONS		
REV	DESCRIPTION	EFFECTIVE DATE:
0	APPROVED FOR CONSTRUCTION	14 MAY 2002

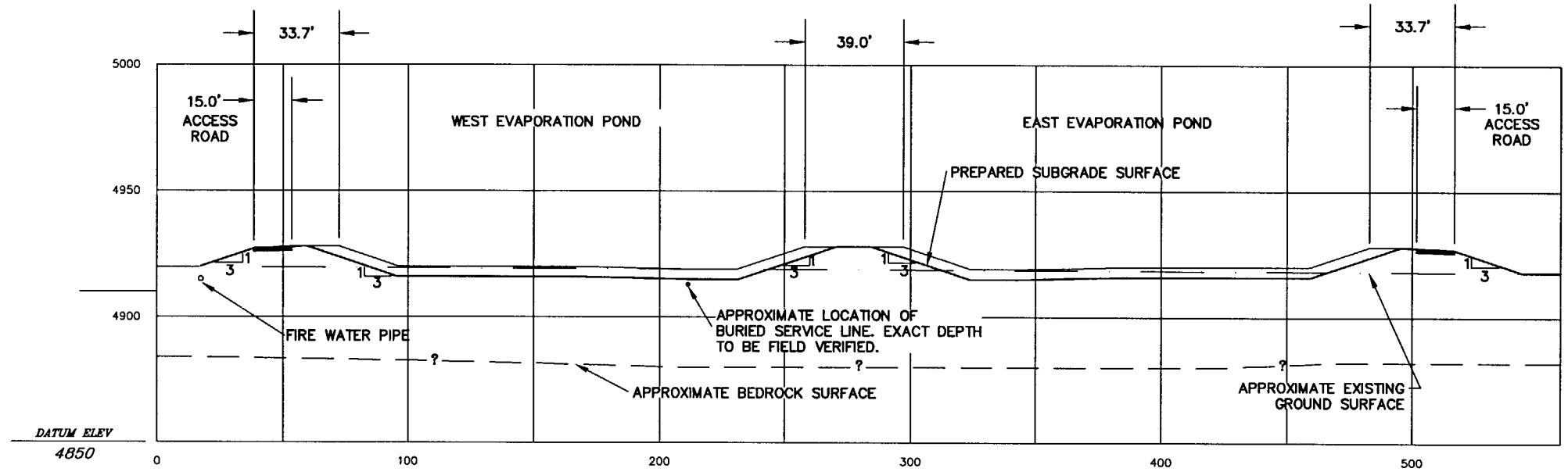

A C-203 EAST AND WEST EVAPORATION PONDS CROSS-SECTION
EAST – WEST CROSS-SECTION

SCALE 30' 0 30' 60'

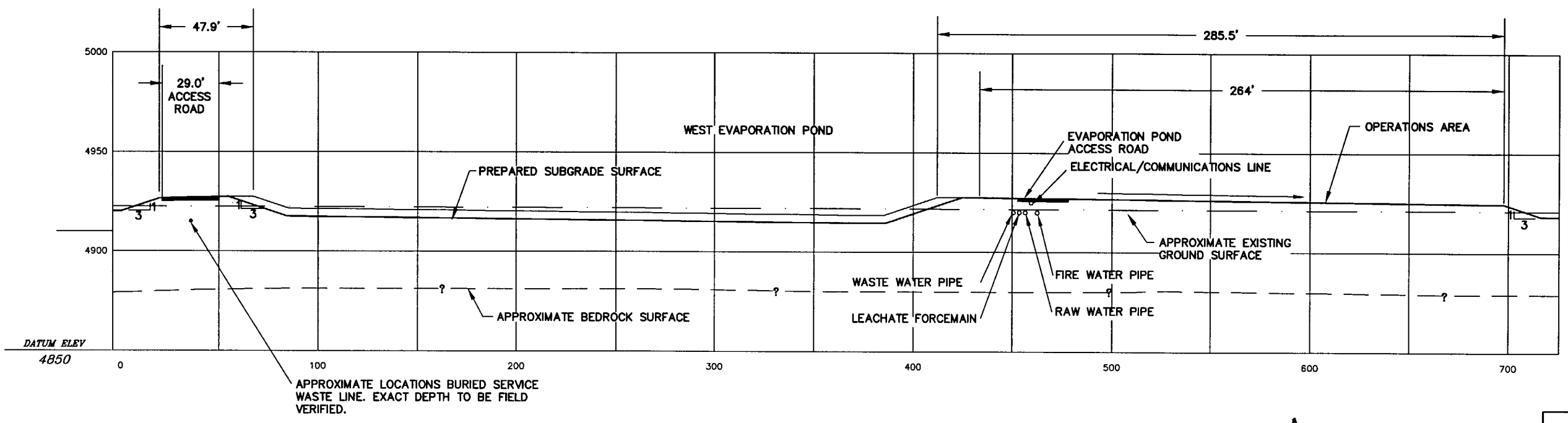

B C-203 WEST EVAPORATION POND CROSS-SECTION
NORTH–SOUTH CROSS-SECTION

SCALE 30' 0 30' 60'

PROFESSIONAL ENGINEER REGISTERED 9144 STATE OF IDAHO PHILLIP E. CROUSE

SUBCONTRACT NO.	S01-588058
REQUESTER:	
DESIGN:	PHILLIP CROUSE
DRAWN:	NICOLE GONZALEZ
PROJECT NO.	
SPEC CODE	
FOR REVIEW/APPROVAL SIGNATURES SEE DAR NO.	DAR
EFFECTIVE DATE:	

INEEL Idaho National Engineering & Environmental Laboratory BECHTEL BWXT IDAHO, LLC

CH2MHILL MWH MONTGOMERY WATSON HARZA

INEEL CERCLA DISPOSAL FACILITY (ICDF)

GRADING SECTIONS AND DETAILS

SIZE	CAGE CODE	INDEX CODE NUMBER AREA	TYPE	CI	ORIG	DWG-	REV
D		B21	0100	02			0

SCALE: AS SHOWN CPP SHEET C-205

REVISIONS		
REV	DESCRIPTION	EFFECTIVE DATE:
0	APPROVED FOR CONSTRUCTION	14 MAY 2002

NOTES:

1. GRADES SHOWN ARE TO TOP OF PRIMARY GEOMEMBRANE.
2. SLOPE TO DRAIN AREAS SHALL BE A MINIMUM OF 1%.
3. TRANSITION SLDRS DETAIL (1/H-203) TO DETAIL (2/H-204) AT THIS LOCATION.

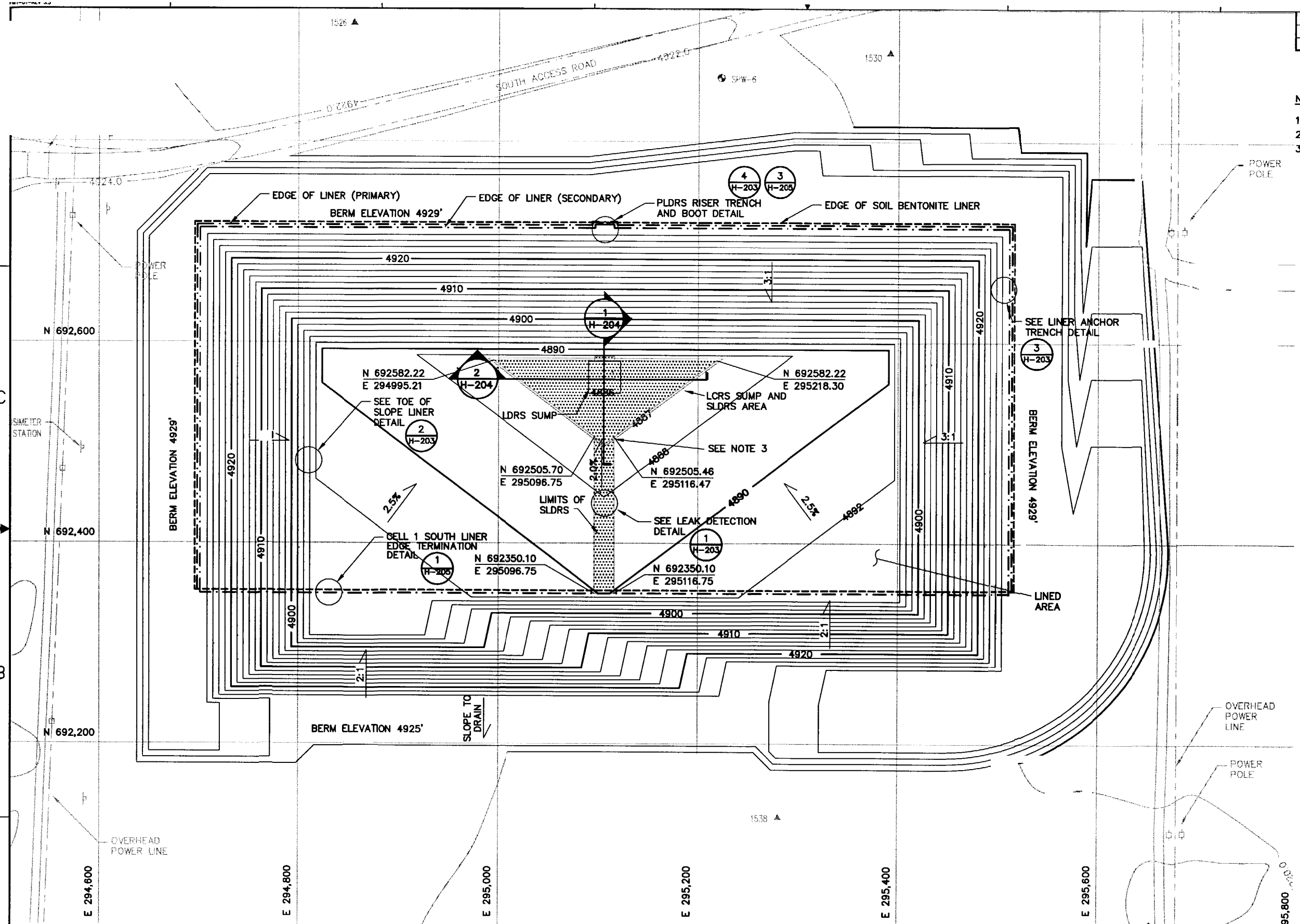

SUBCONTRACT NO.	S01-588058
REQUESTER:	
DESIGN:	PHILLIP CROUSE
DRAWN:	MATT MATHISEN
PROJECT NO.	
SPEC CODE	
FOR REVIEW/APPROVAL SIGNATURES SEE DAR NO.	DAR
EFFECTIVE DATE:	

PROFESSIONAL ENGINEER REGISTERED 9144 STATE OF IDAHO PHILLIP E. CROUSE

INEEL (Idaho National Engineering & Environmental Laboratory) BECHTEL BWXT IDAHO, LLC

CH2MHILL MWH MONTGOMERY WATSON HARZA

INEEL CERCLA DISPOSAL FACILITY (ICDF)

CELL 1 GEOSYNTHETICS LINER SYSTEMS PLAN

SIZE	CAGE CODE	INDEX CODE NUMBER					REV
		AREA	TYPE	CL	ORG	DWG-	
D		B21	0500	02			0

SCALE: AS SHOWN CPP SHEET H-201

REVISIONS		
REV	DESCRIPTION	EFFECTIVE DATE:
0	APPROVED FOR CONSTRUCTION	14 MAY 2002

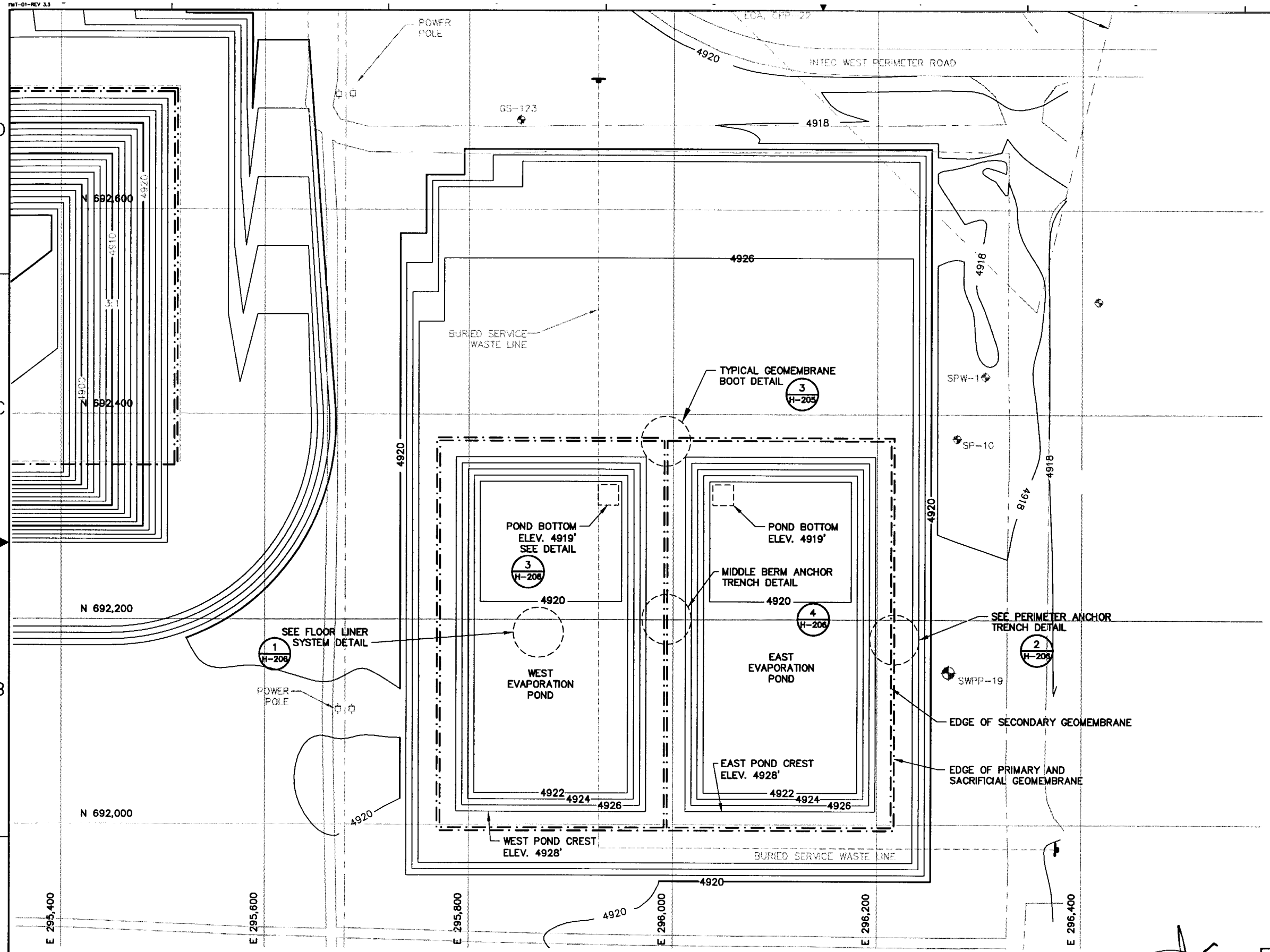

NOTES:

1. GRADES SHOWN ARE TOP OF UPPER (SACRIFICIAL) GEMOMEMBRANE.

N

SCALE

50' 0 50' 100'

CONTOUR INTERVAL 2FT.

PROFESSIONAL ENGINEER REGISTERED 9144 STATE OF IDAHO PHILLIP E. CROUSE 5-17-02

SUBCONTRACT NO.	S01-588058
REQUESTER:	
DESIGN:	PHILLIP CROUSE
DRAWN:	MATT MATHISEN
PROJECT NO.	
SPEC CODE	
FOR REVIEW/APPROVAL SIGNATURES SEE DAR NO.	DAR
EFFECTIVE DATE:	

INEEL Idaho National Engineering & Environmental Laboratory BECHTEL BWXT IDAHO, LLC

CH2MHILL MWH MONTGOMERY WATSON HARZA

INEEL CERCLA DISPOSAL FACILITY (ICDF)

EVAPORATION POND GEOSYNTHETICS LINER SYSTEMS PLAN

SIZE	CAGE CODE	INDEX CODE NUMBER AREA	TYPE	CI	ORG	DWG-	REV
D		B21	0500	02			0

SCALE: AS SHOWN CPP SHEET H-202

REVISIONS		
REV	DESCRIPTION	EFFECTIVE DATE:
0	APPROVED FOR CONSTRUCTION	14 MAY 2002

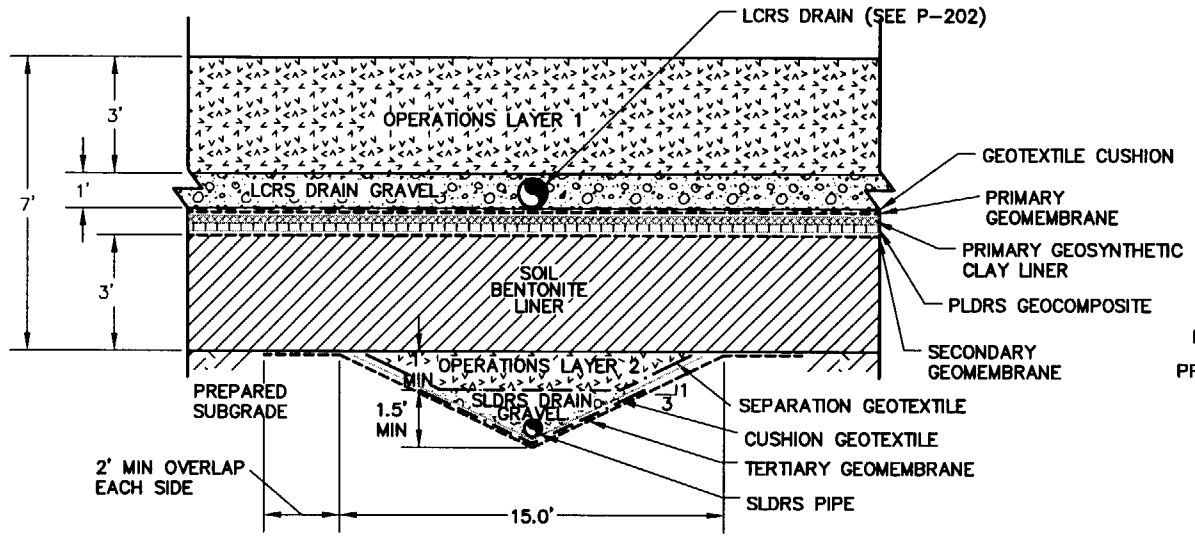

1 H-201 LEAK DETECTION DETAIL
NTS

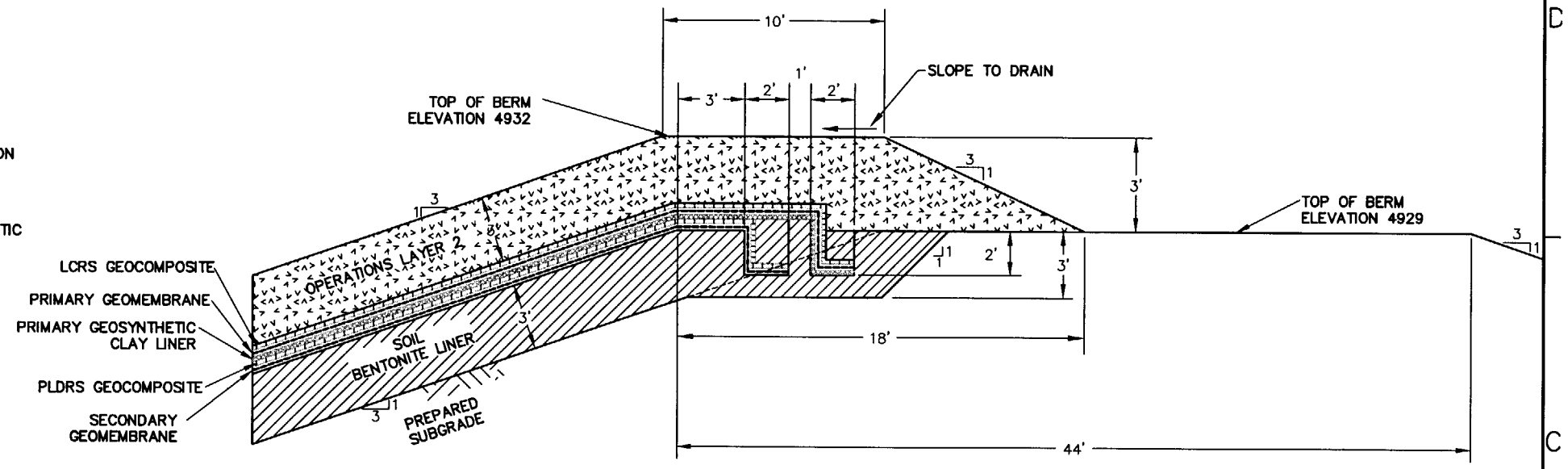

3 H-201 LINER ANCHOR TRENCH DETAIL
NTS

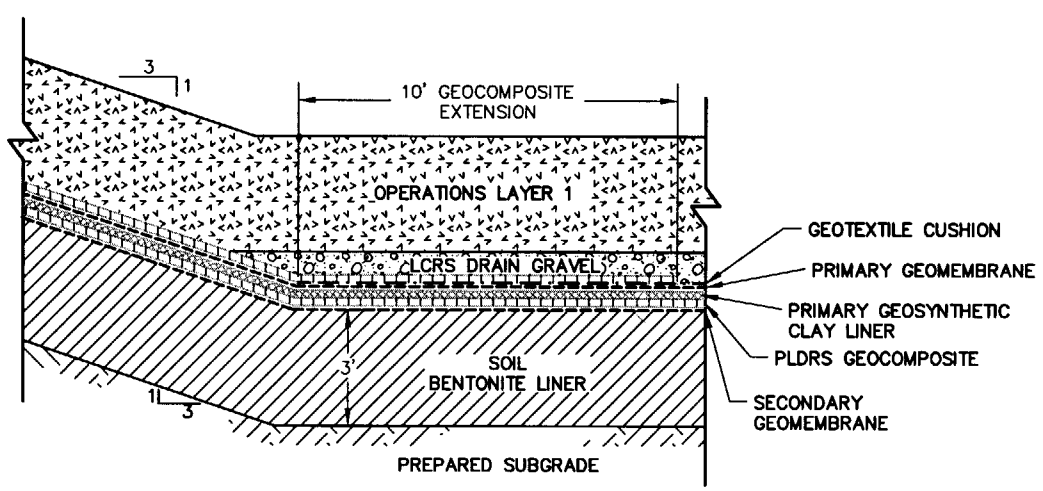

2 H-201 TOE OF SLOPE LINER DETAIL
NTS

NOTE: GEOTEXTILE CUSHION ENDS AT TOE OF SLOPE

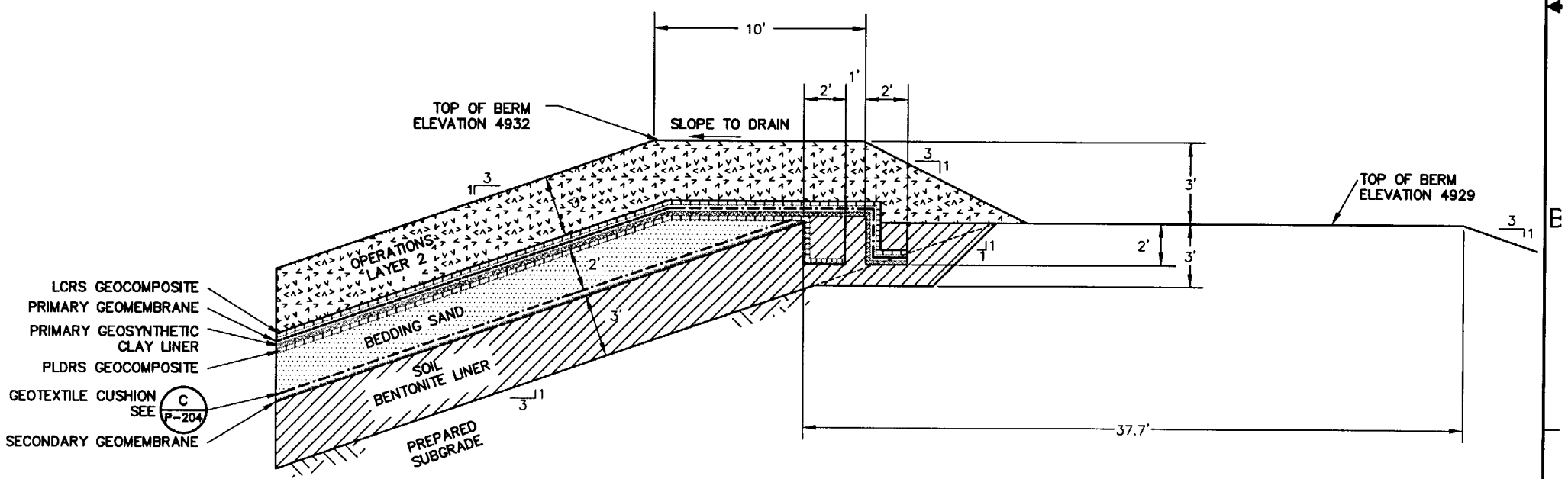

4 H-201 PLDRS RISER TRENCH DETAIL
NTS

NOTE:

RISER PIPE NOT SHOWN. SEE 3 H-205 FOR GEOMEMBRANE BOOT AT PIPE PENETRATION.

PROFESSIONAL ENGINEER REGISTERED 9147 STATE OF IDAHO PHILLIP E. CROUSE

SUBCONTRACT NO.	S01-588058
REQUESTER:	
DESIGN:	PHILLIP CROUSE
DRAWN:	MATT MATHISEN
PROJECT NO.	
SPEC CODE	
FOR REVIEW/APPROVAL SIGNATURES SEE DAR NO.	DAR
EFFECTIVE DATE:	

INEEL Idaho National Engineering & Environmental Laboratory BECHTEL BWXT IDAHO, LLC

CH2MHILL MWH MONTGOMERY WATSON HARZA

INEEL CERCLA DISPOSAL FACILITY (ICDF)

LINER SYSTEMS
SECTIONS AND DETAILS

SIZE	CAGE CODE	INDEX CODE NUMBER AREA	TYPE	Q	ORIG		REV
D		B21	0100	02		DWG-	0
SCALE: AS SHOWN						CPP SHEET H-203	

REVISIONS		
REV	DESCRIPTION	EFFECTIVE DATE:
0	APPROVED FOR CONSTRUCTION	14 MAY 2002

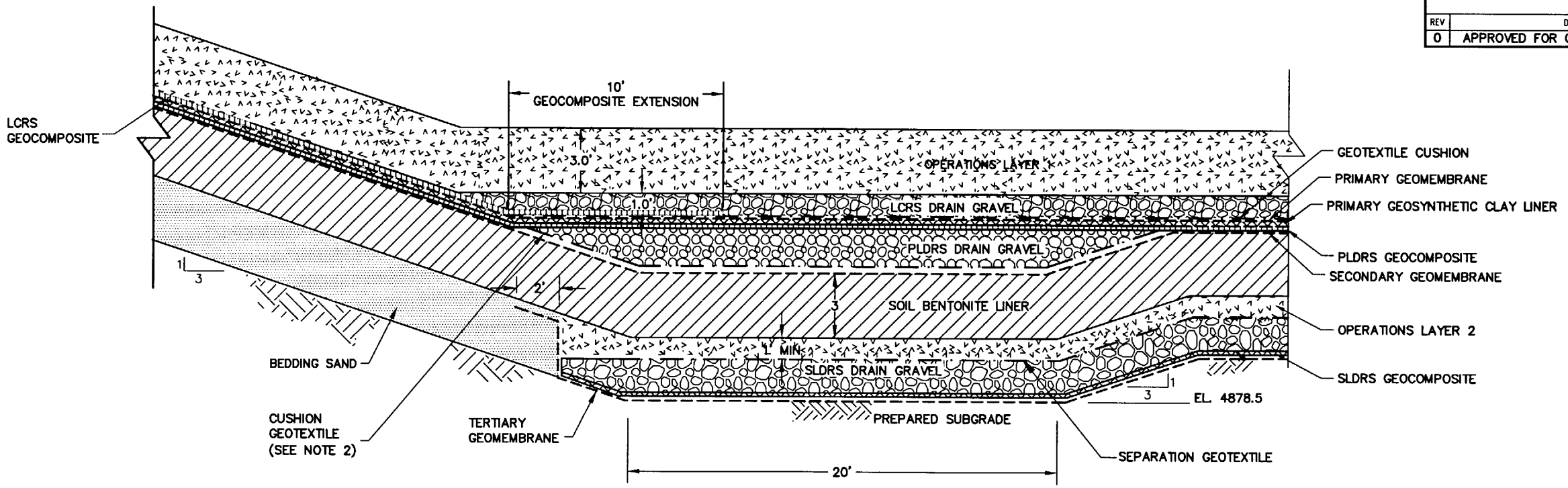

1 H-201 ICDF SUMP DETAIL NORTH – SOUTH CROSS-SECTION

NTS

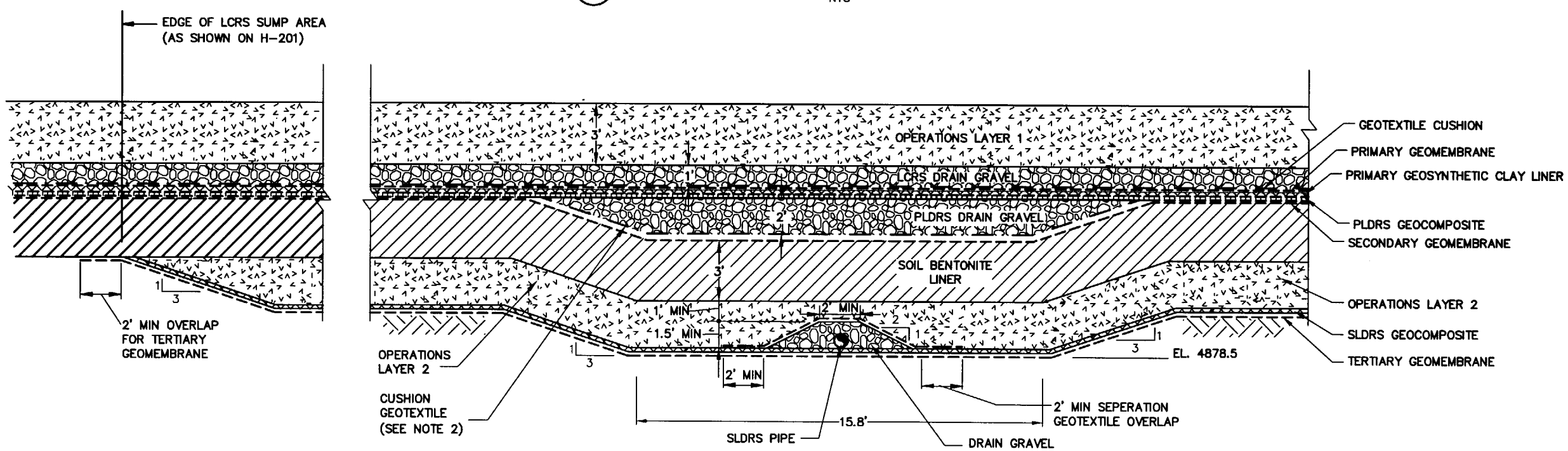

2 H-201 ICDF SUMP DETAIL EAST – WEST CROSS-SECTION

NTS

NOTES:

1. COLLECTION AND RISER PIPES NOT SHOWN FOR CLARITY.
2. EXTEND CUSHION GEOTEXTILE MINIMUM 2'-0" ON EITHER SIDE OF SUMP.

PROFESSIONAL ENGINEER REGISTERED 9144 STATE OF IDAHO PHILLIP E. CROUSE 5-7-02

SUBCONTRACT NO.	S01-588058
REQUESTER:	
DESIGN:	PHILLIP CROUSE
DRAWN:	JULIE GATES
PROJECT NO.	
SPEC CODE	
FOR REVIEW/APPROVAL SIGNATURES SEE DAR NO.	DAR
EFFECTIVE DATE:	

INEEL Idaho National Engineering & Environmental Laboratory BECHTEL BWXT IDAHO, LLC

CH2MHILL MWH MONTGOMERY WATSON HARZA

INEEL CERCLA DISPOSAL FACILITY (ICDF)

LINER SYSTEMS SECTIONS AND DETAILS

SIZE	CAGE CODE	INDEX CODE NUMBER AREA	TYPE	G	ORIG	DWG-	REV
D		B21	0500	02			0

SCALE: AS SHOWN CPP SHEET H-204

REVISIONS		
REV	DESCRIPTION	EFFECTIVE DATE:
0	APPROVED FOR CONSTRUCTION	14 MAY 2002

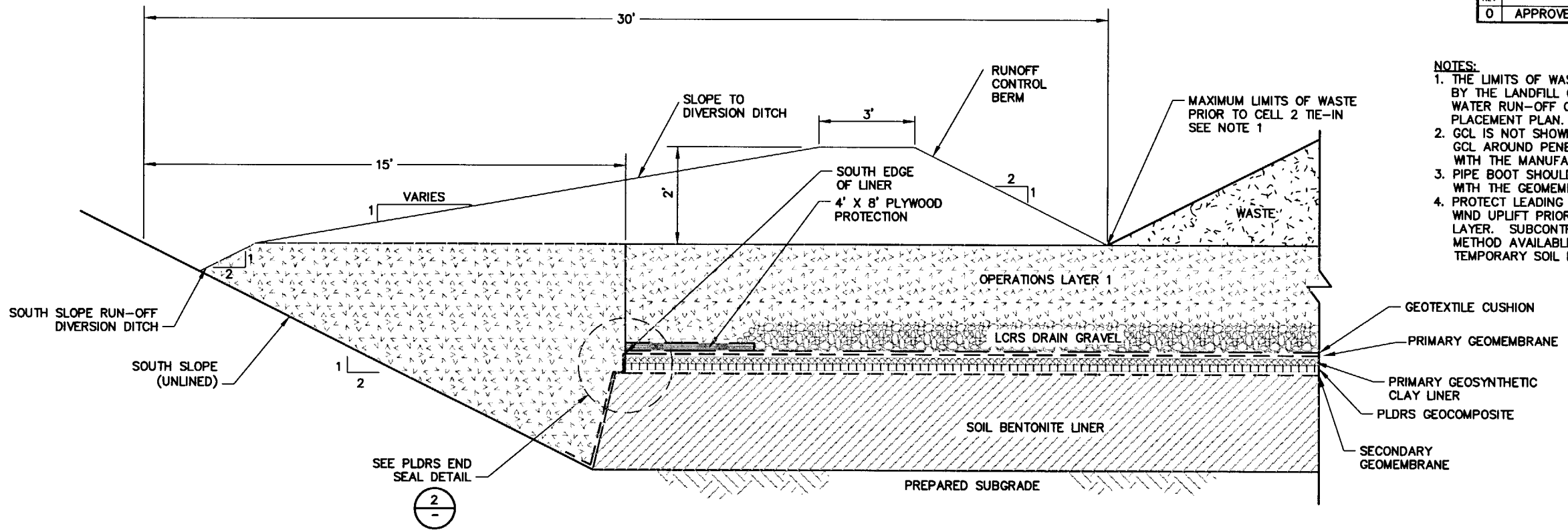

1 CELL 1 SOUTH LINER EDGE TERMINATION DETAIL
C-202, H-201 NTS

NOTES:
1. THE LIMITS OF WASTE SHALL BE DETERMINED BY THE LANDFILL OPERATOR TO MAINTAIN ADEQUATE WATER RUN-OFF CONTROL. SEE THE WASTE PLACEMENT PLAN.
2. GCL IS NOT SHOWN FOR CLARITY. SEAL GCL AROUND PENETRATION IN ACCORDANCE WITH THE MANUFACTURERS REQUIREMENTS.
3. PIPE BOOT SHOULD BE INSTALLED IN ACCORDANCE WITH THE GEOMEMBRANE MANUFACTURERS REQUIEMENTS.
4. PROTECT LEADING EDGE OF GEOMEMBRANE AGAINST WIND UPLIFT PRIOR TO PLACEMENT OF OPERATIONS LAYER. SUBCONTRACTOR SHALL SELECT BEST METHOD AVAILABLE SUCH AS SAND BAGS OR TEMPORARY SOIL BERM.

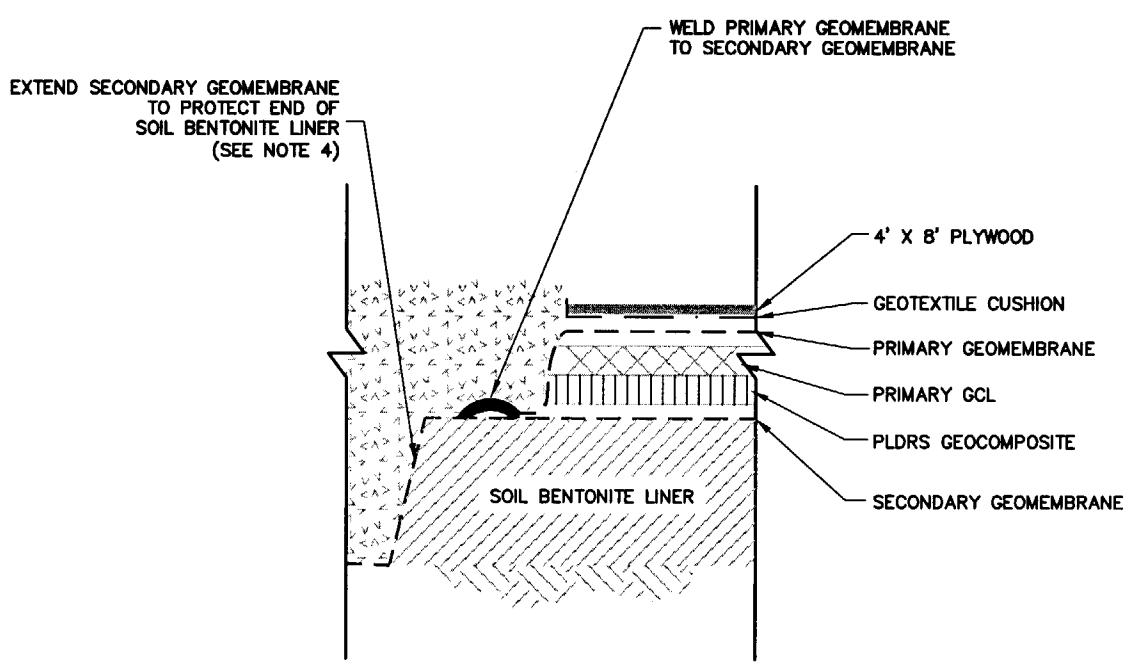

2 PLDRS END SEAL DETAIL
NTS

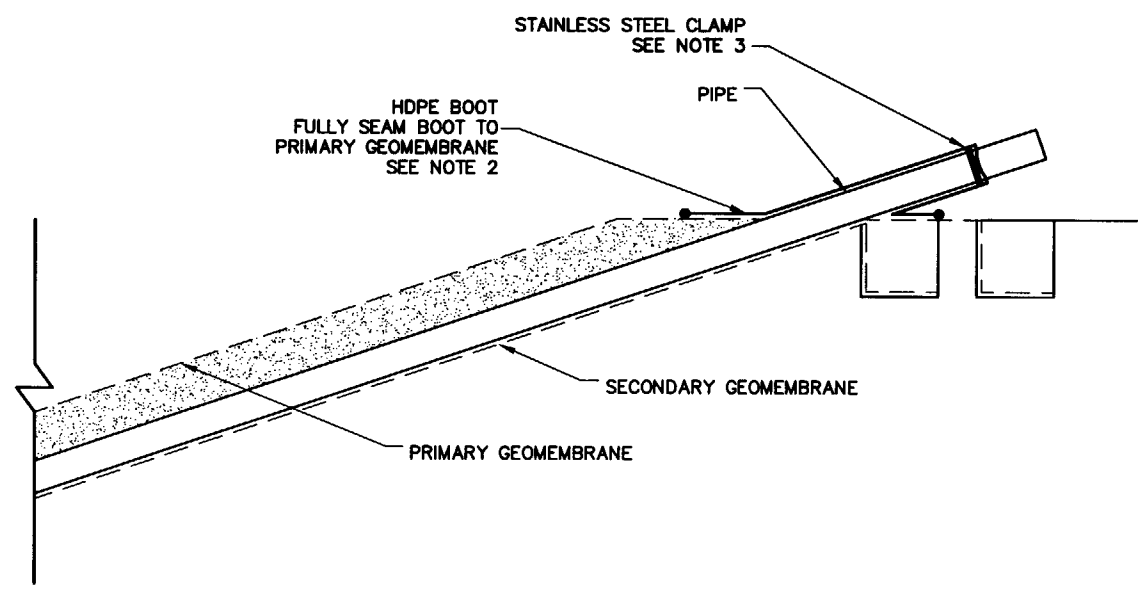

3 TYPICAL GEOMEMBRANE BOOT DETAIL
H-201, H-203 NTS

PROFESSIONAL ENGINEER REGISTERED 9143 STATE OF IDAHO PHILLIP E. CROUSE 5-7-02

SUBCONTRACT NO.	S01-588058
REQUESTER:	
DESIGN:	PHILLIP CROUSE
DRAWN:	JULIE GATES
PROJECT NO.	
SPEC CODE	
FOR REVIEW/APPROVAL SIGNATURES SEE DAR NO.	DAR
EFFECTIVE DATE:	

INEEL (Idaho National Engineering & Environmental Laboratory) BECHTEL BWXT IDAHO, LLC

CH2MHILL MWH MONTGOMERY WATSON HARZA

INEEL CERCLA DISPOSAL FACILITY (ICDF)

LINER SYSTEMS
SECTIONS AND DETAILS

SIZE	CAGE CODE	INDEX CODE NUMBER AREA	TYPE	CL	ORIG	DWG-	REV
D		B21	0100	02			0

SCALE: AS SHOWN CPP SHEET H-205

REVISIONS		
REV	DESCRIPTION	EFFECTIVE DATE:
0	APPROVED FOR CONSTRUCTION	14 MAY 2002

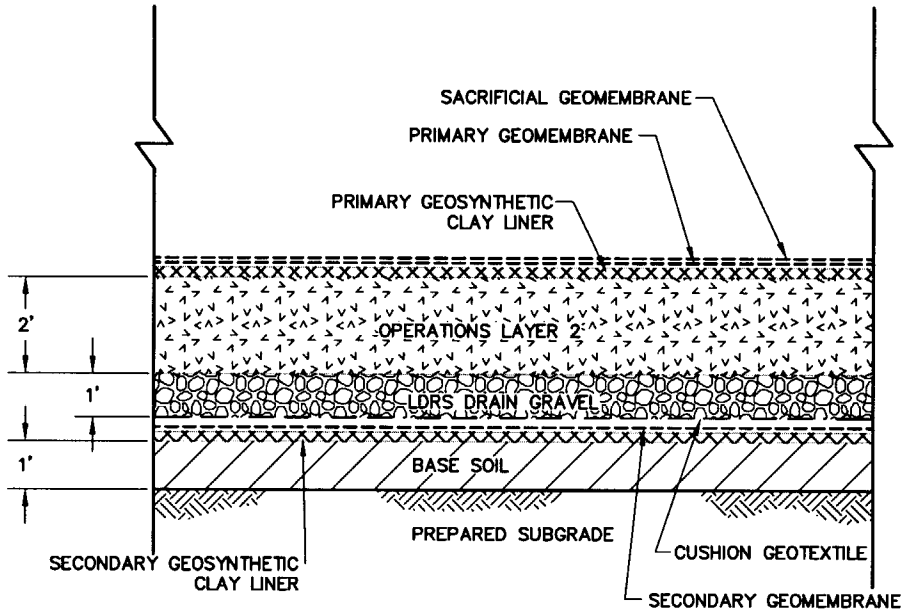

1 / H-202 FLOOR LINER SYSTEM DETAIL
NTS

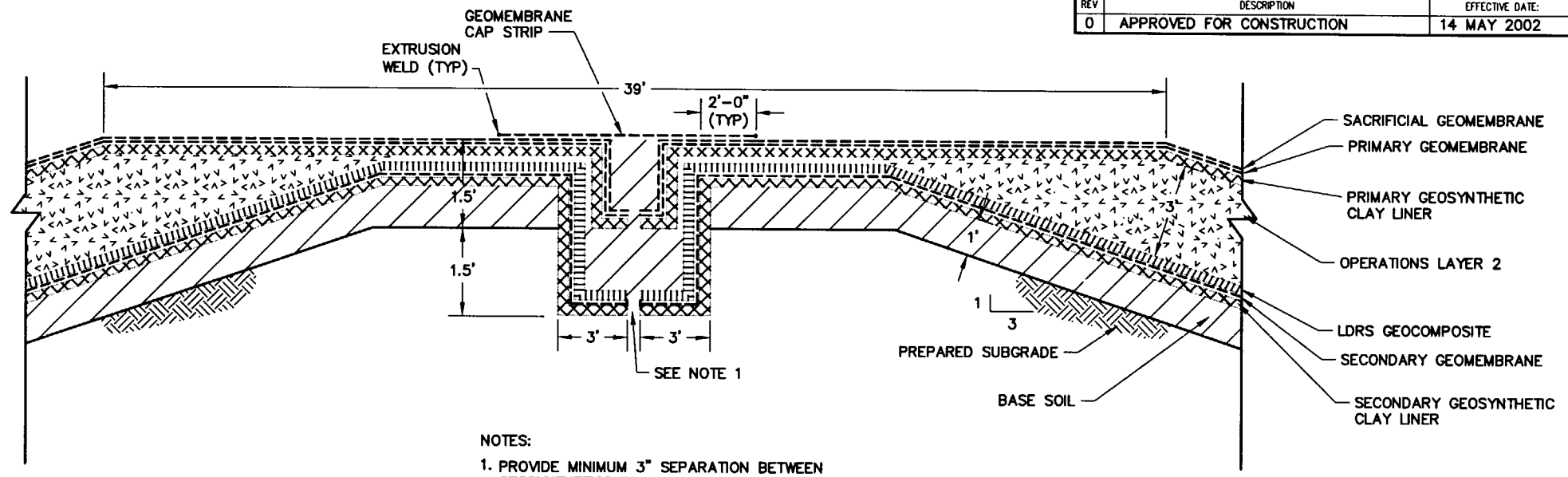

NOTES:

1. PROVIDE MINIMUM 3" SEPARATION BETWEEN GEOSYNTHETICS IN ANCHOR TRENCH FROM EAST AND WEST PONDS.
2. DRAIN ANCHOR TRENCH TO THE SOUTH TO PREVENT PONDED WATER ON GEOSYNTHETICS DURING CONSTRUCTION.

4 / H-202 MIDDLE BERM ANCHOR TRENCH DETAIL
NTS

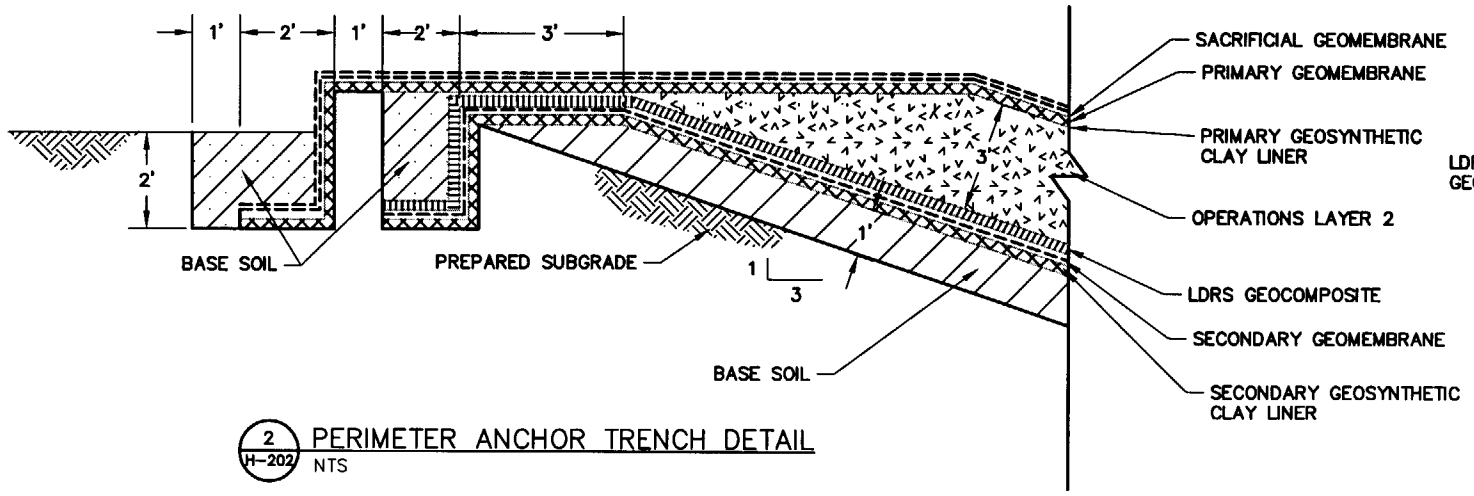

2 / H-202 PERIMETER ANCHOR TRENCH DETAIL
NTS

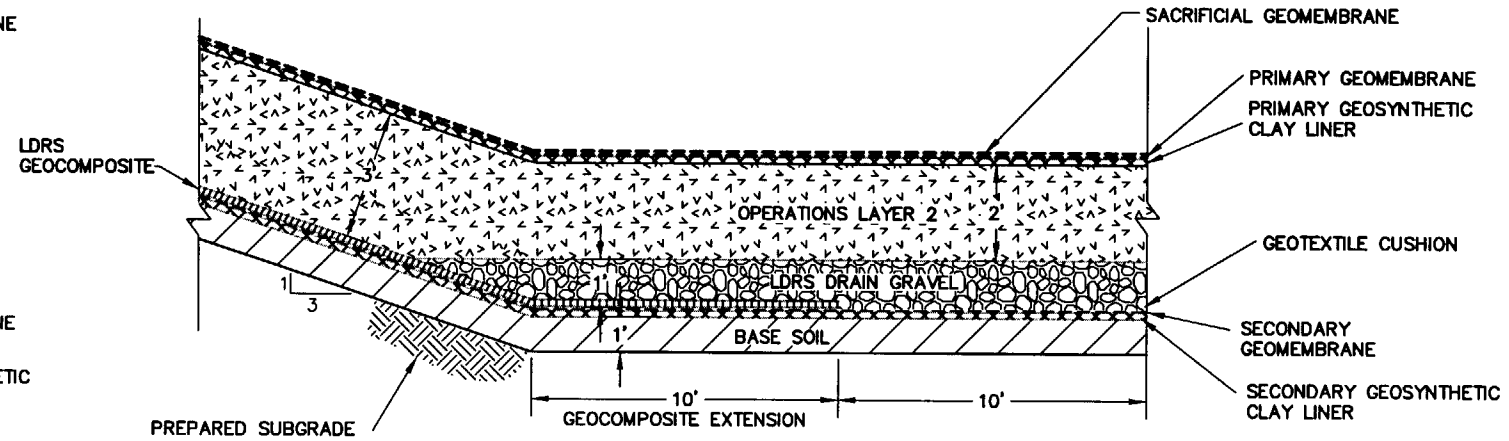

3 / H-202 EVAPORATION POND SUMP AND TOE OF SCOPE DETAIL
NTS

NOTES:

1. RISER PIPES NOT SHOWN FOR CLARITY.
2. PERMANENT ANCHORING SHALL BE INSTALLED ON THE SACRIFICIAL GEOMEMBRANE. IN ACCORDANCE WITH THE SPECIFICATIONS.

PROFESSIONAL ENGINEER REGISTERED 9144 5-7-02 STATE OF IDAHO PHILLIP E. CROUSE

SUBCONTRACT NO.	S01-588058
REQUESTER:	
DESIGN:	PHILLIP CROUSE
DRAWN:	JULIE GATES
PROJECT NO.	
SPEC CODE	
FOR REVIEW/APPROVAL SIGNATURES SEE DAR NO.	DAR
EFFECTIVE DATE:	

INEEL Idaho National Engineering & Environmental Laboratory BECHTEL BWXT IDAHO, LLC

CH2MHILL MWH MONTGOMERY WATSON HARZA

INEEL CERCLA DISPOSAL FACILITY (ICDF)

EVAPORATION POND(S) LINER SYSTEMS SECTIONS AND DETAILS

SIZE	CAGE CODE	INDEX CODE NUMBER AREA	TYPE	CL	ORG	DWG-	REV
D		B21	0100	02			0

SCALE: AS SHOWN CPP SHEET H-206

REVISIONS		
REV	DESCRIPTION	EFFECTIVE DATE:
0	APPROVED FOR CONSTRUCTION	14 MAY 2002

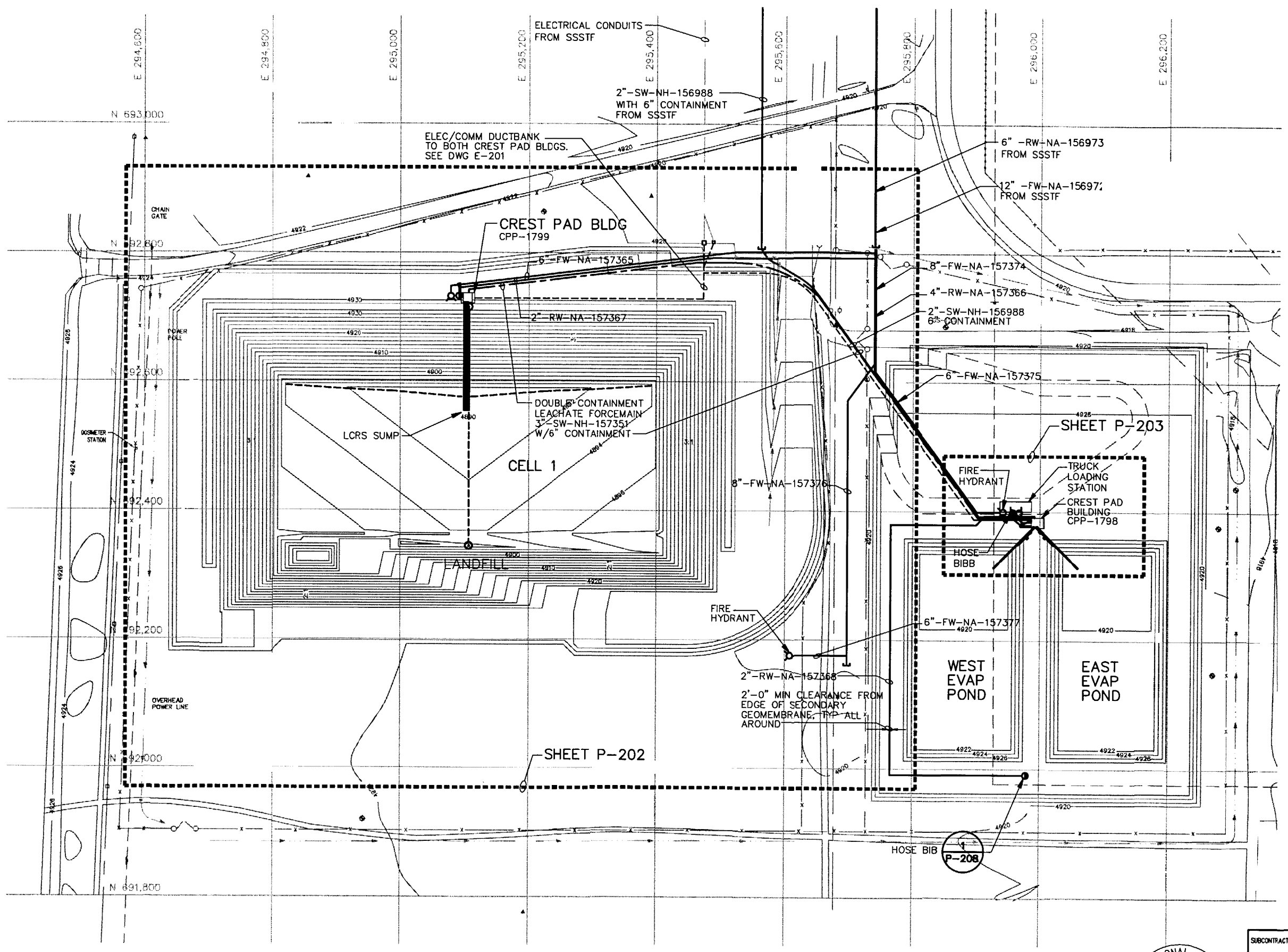

NOTES: (APPLIES TO "P" SERIES DRAWINGS)

1. LOCATION OF UTILITY PIPE/CONDUIT ROUTING IS APPROXIMATE AND TO BE VERIFIED IN FIELD PRIOR TO CONSTRUCTION.
2. ALL BURIED LEACHATE PIPE OUTSIDE OF LANDFILL LINER, EVAP POND LINER, OR STORAGE FACILITIES, IS DOUBLE CONTAINMENT.
3. ROUTE ALL HDPE PIPE TO PROVIDE BEND RADIUS NOT LESS THAN MINIMUM RECOMMENDED BY MANUFACTURER. NOT ALL PIPE FITTINGS ARE SHOWN. PROVIDE PIPE FITTINGS AS NECESSARY TO ATTAIN ALIGNMENT AS SHOWN FOR ALL PIPING SHOWN ON THE DRAWINGS. ALL PIPE IS BUTT FUSED.
4. SEE SPECS FOR PIPE SDR AND TYPE – SLOTTED OR SOLID.
5. CONTOURS REPRESENT FINAL GRADE (SEE C-201)

N

80' 0 80' 160'
Scale In Feet

LEGEND: (APPLIES TO "P" SERIES DRAWINGS)

- SOLID PIPE BURIED (UNLESS SHOWN OTHERWISE)
- SLOTTED PIPE BURIED
- DOUBLE CONTAINMENT LEACHATE FORCEMAIN
- CONDUIT AND CONDUCTORS
- FREEZE PROOF HYDRANT
- HOSE BIBB
- LEACHATE CLEANOUT RISER
- CONNECTION POINT W/ SSSTF PIPING
- DOUBLE CONTAINMENT LEACHATE PIPE SUMP

PROFESSIONAL ENGINEER REGISTERED 3755 STATE OF IDAHO LAWRENCE M. FETTKETHER 5/8/02

INEEL Idaho National Engineering & Environmental Laboratory BECHTEL BWXT IDAHO, LLC

CH2MHILL MWH MONTGOMERY WATSON HARZA

IN EI CERCLA DISPOSAL FACILITY (ICDF)

LEACHATE PIPING PLAN

SUBCONTRACT NO.	S01-588058
REQUESTER:	
DESIGN:	BYRL THOMPSON
DRAWN:	JOSHUA PRETS
PROJECT NO.	
SPEC CODE	
FOR REVIEW/APPROVAL SIGNATURES SEE DAR NO.	DAR
EFFECTIVE DATE:	

SIZE	CAGE CODE	INDEX CODE NUMBER AREA	TYPE	CL	ORIG	DWG-	REV
D		B21	0100	02			0

SCALE: AS SHOWN CPP SHEET P-201

REVISIONS		
REV	DESCRIPTION	EFFECTIVE DATE:
0	APPROVED FOR CONSTRUCTION	14 MAY 2002

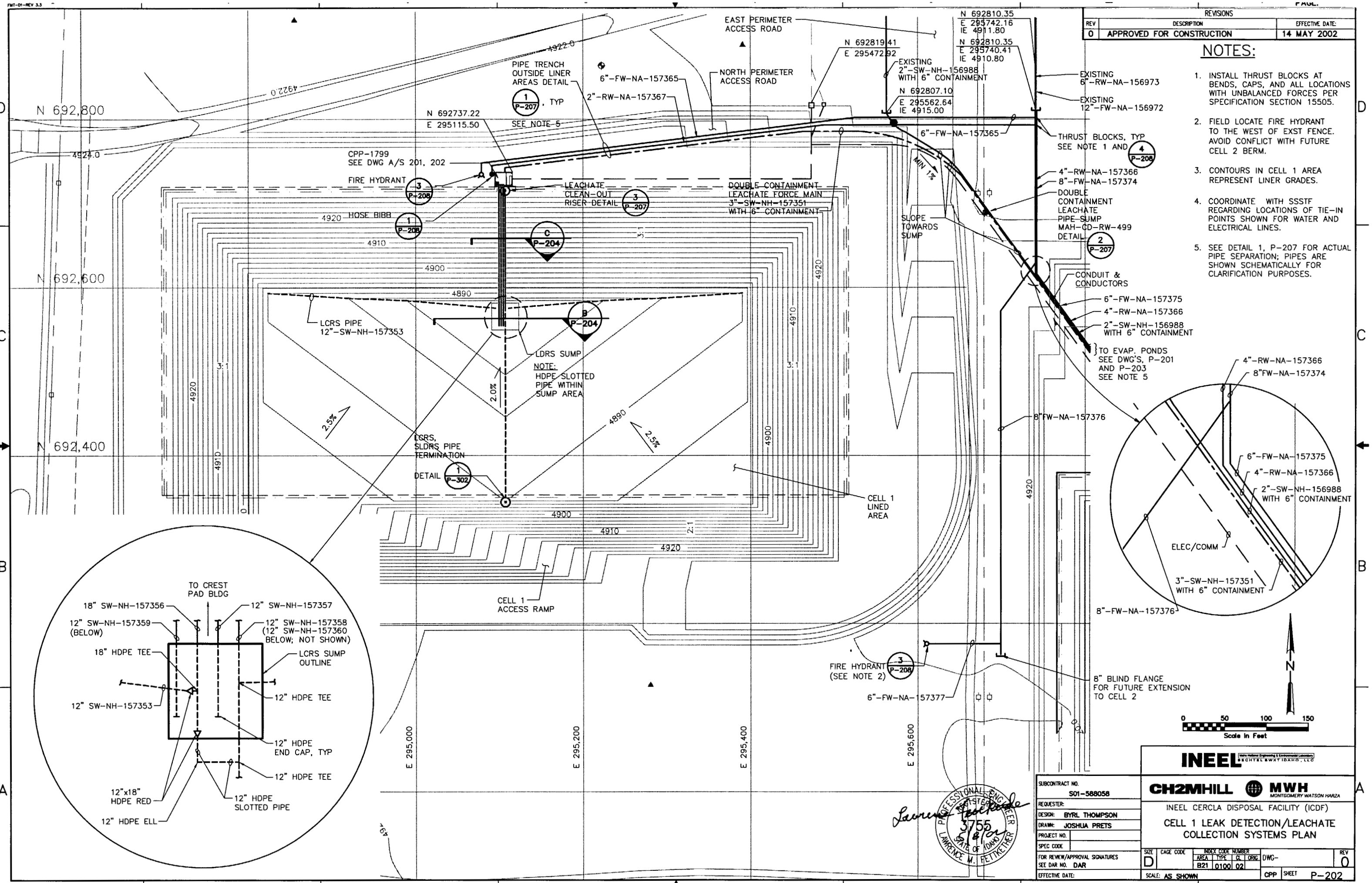

NOTES:

1. INSTALL THRUST BLOCKS AT BENDS, CAPS, AND ALL LOCATIONS WITH UNBALANCED FORCES PER SPECIFICATION SECTION 15505.
2. FIELD LOCATE FIRE HYDRANT TO THE WEST OF EXST FENCE. AVOID CONFLICT WITH FUTURE CELL 2 BERM.
3. CONTOURS IN CELL 1 AREA REPRESENT LINER GRADES.
4. COORDINATE WITH SSSTF REGARDING LOCATIONS OF TIE-IN POINTS SHOWN FOR WATER AND ELECTRICAL LINES.
5. SEE DETAIL 1, P-207 FOR ACTUAL PIPE SEPARATION; PIPES ARE SHOWN SCHEMATICALLY FOR CLARIFICATION PURPOSES.

PROFESSIONAL ENGINEER REGISTERED 3755 STATE OF IDAHO LAWRENCE M. FETTKETHER

SUBCONTRACT NO.	S01-588058
REQUESTER:	
DESIGN:	BYRL THOMPSON
DRAWN:	JOSHUA PRETS
PROJECT NO.	
SPEC CODE	
FOR REVIEW/APPROVAL SIGNATURES SEE DAR NO.	DAR
EFFECTIVE DATE:	

INEEL (Idaho National Engineering & Environmental Laboratory) BECHTEL BWXT IDAHO, LLC

CH2MHILL MWH MONTGOMERY WATSON HARZA

INEEL CERCLA DISPOSAL FACILITY (ICDF)

CELL 1 LEAK DETECTION/LEACHATE COLLECTION SYSTEMS PLAN

SIZE	CAGE CODE	INDEX CODE NUMBER AREA	TYPE	CL	ORIG	DWG-	REV
D		B21	0100	02			0

SCALE: AS SHOWN CPP SHEET P-202

REVISIONS		
REV	DESCRIPTION	EFFECTIVE DATE:
0	APPROVED FOR CONSTRUCTION	14 MAY 2002

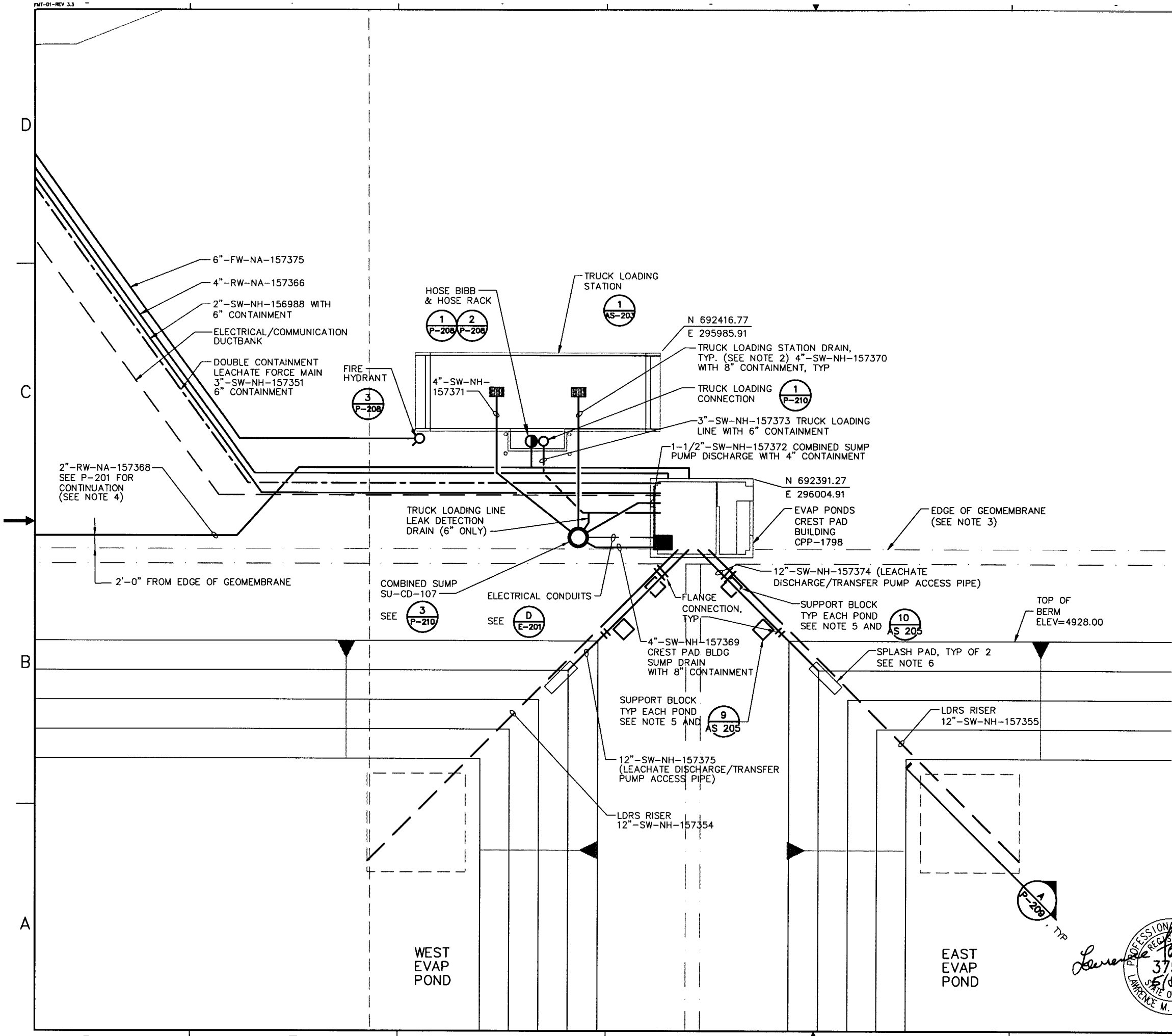

NOTE:

1. DOUBLE CONTAINMENT PIPING TO INCLUDE: DRAINS (4" CARRIER, 8" CONTAINMENT), LEACHATE FORCE MAIN (3" CARRIER, 6" CONTAINMENT), BUILDING SUMP PUMP DISCHARGE (1 1/2" CARRIER, 4" CONTAINMENT), SSSTF SERVICE WASTE (2" CARRIER, 6" CONTAINMENT), AND TRUCK LOADING (3" CARRIER, 6" CONTAINMENT)
2. SLOPE DRAINS TO COMBINED SUMP AT 1% SLOPE. SEE AS-203 & P-210 FOR DETAILS.
3. NOTCH GEOMEMBRANE ANCHOR TRENCH IN VICINITY OF CREST PAD BUILDING FOUNDATION AS NECESSARY.
4. MAINTAIN MINIMUM 2'-0" CLEARANCE FROM EDGE OF SECONDARY GEOMEMBRANE.
5. LOCATE SUPPORT BLOCKS TO PROVIDE MAXIMUM PIPE SPAN OF 7 FEET.
6. PROVIDE ADDITIONAL LAYER OF HDPE LINER MATERIAL (APPROX. 3 FT X 10 FT) TO SERVE AS WEAR PROTECTION AT DISCHARGE PIPE. WELD SPLASH PAD TO MAIN LINER.

PROFESSIONAL ENGINEER REGISTERED 3755 STATE OF IDAHO LAWRENCE M. FETTKETHER 5/8/02

SUBCONTRACT NO.	S01-588058
REQUESTER:	
DESIGN:	BILL FARMER
DRAWN:	JOSHUA PRETS
PROJECT NO.	
SPEC CODE	
FOR REVIEW/APPROVAL SIGNATURES SEE DAR NO.	DAR
EFFECTIVE DATE:	

INEEL Idaho National Engineering & Environmental Laboratory BECHTEL BWXT IDAHO, LLC

CH2MHILL MWH MONTGOMERY WATSON HARZA

INEEL CERCLA DISPOSAL FACILITY (ICDF)

EVAP. POND(S) LEAK DETECTION/ LEACHATE COLLECTION SYSTEMS PLAN

SIZE	CAGE CODE	INDEX CODE NUMBER					DWG-	REV
		AREA	TYPE	Q	DRNG			
D		B21	0100	02				0

SCALE: AS SHOWN CPP SHEET P-203

REVISIONS		
REV	DESCRIPTION	EFFECTIVE DATE:
0	APPROVED FOR CONSTRUCTION	14 MAY 2002

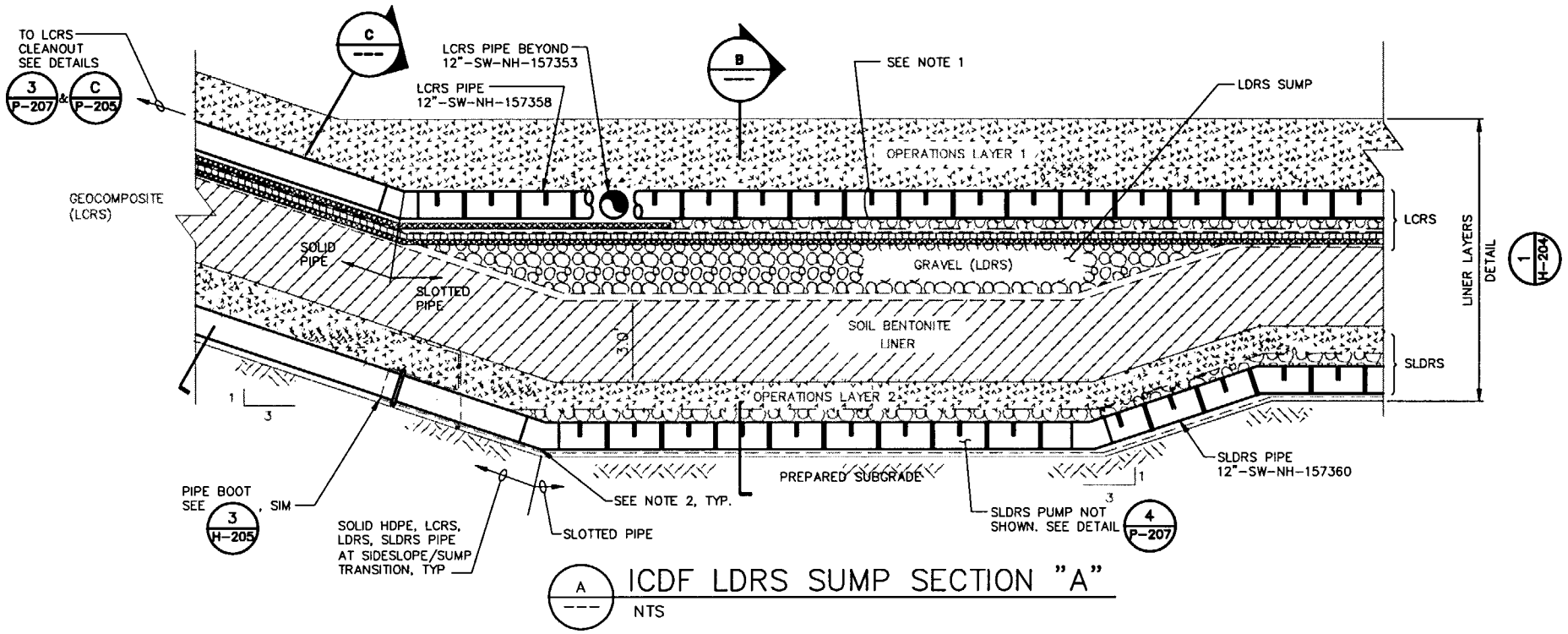

A ICDF LDRS SUMP SECTION "A"
NTS

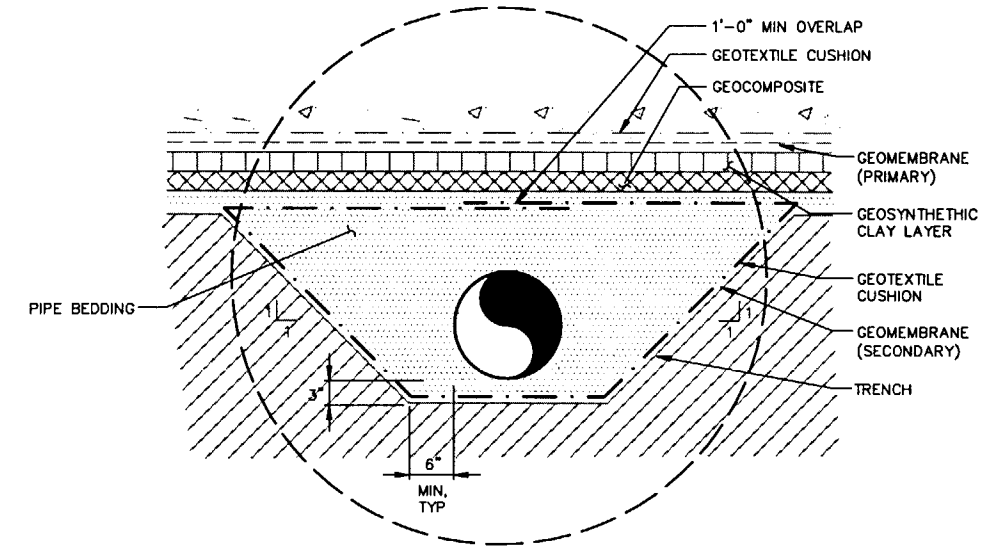

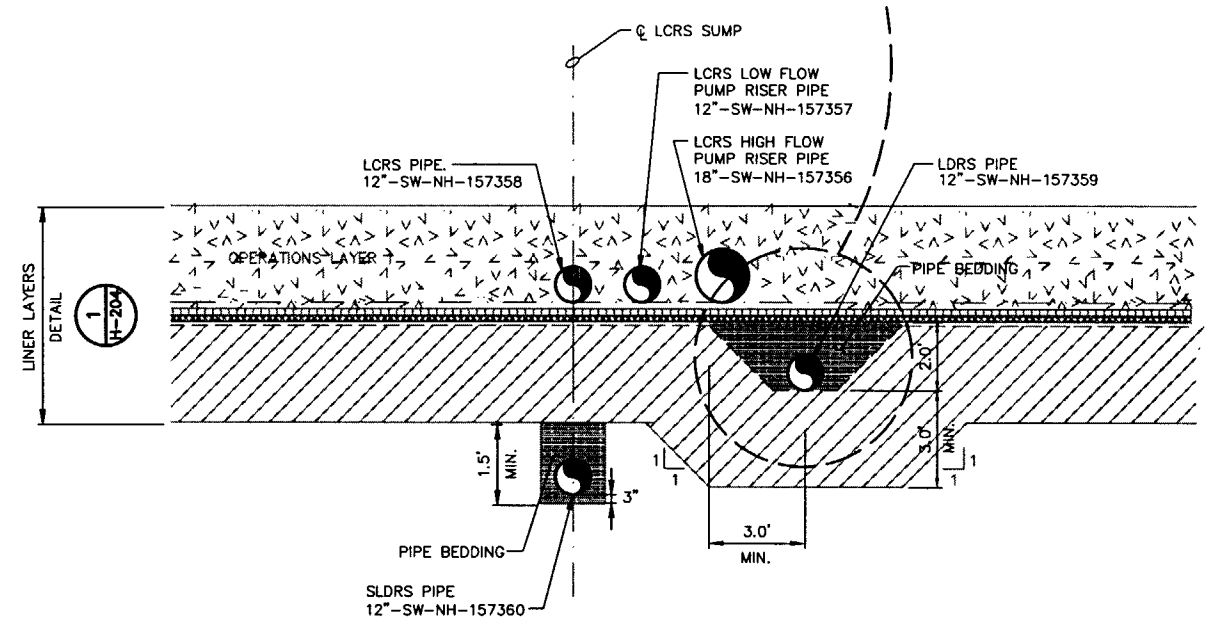

C P-202 ICDF LDRS SUMP SECTION "C"
NTS

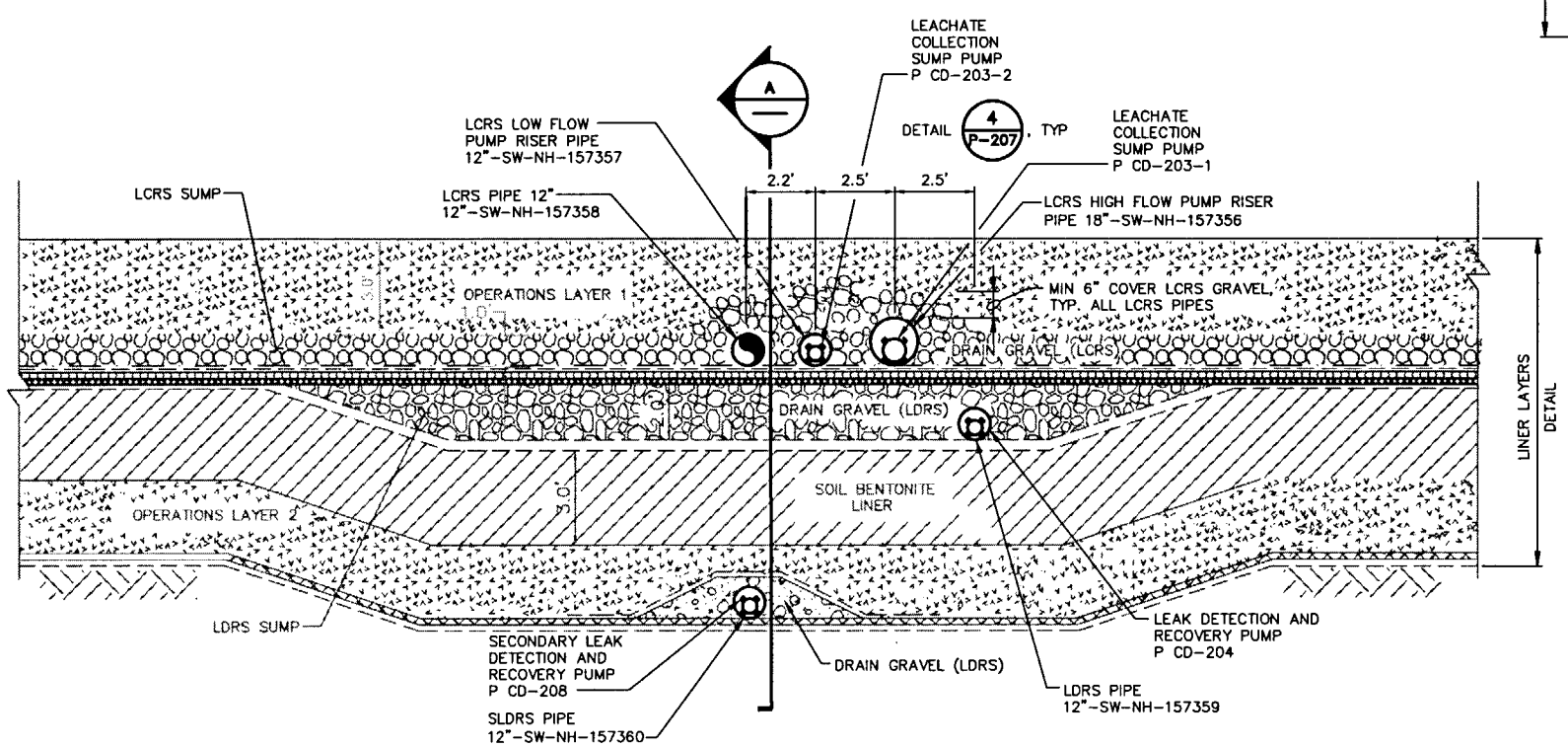

B P-202 ICDF LDRS SUMP SECTION "B"
NTS

NOTES:

1. SOME LAYER THICKNESS FOR GEOSYNTHETIC MTLS ARE SHOWN EXAGGERATED FOR CLARITY. SOME PIPE LOCATIONS SHOWN VERTICALLY ABOVE GEOSYNTHETIC LAYERS FOR CLARITY. ACTUAL INSTALLED CONDITIONS WILL BE PIPE RESTING ON ADJACENT GEOSYNTHETIC LAYER.
2. AT SIDE SLOPE AND SUMP TRANSITIONS, BEND PIPE WITHIN MANUFACTURES RECOMMENDED MIN BEND RADIUS OR USE BUTT-FUSED PIPE FITTINGS TO MAINTAIN CLOSE CONTACT BETWEEN PIPE AND LINER SURFACE. FITTINGS SHALL HAVE SAME SDR AS PIPE. IF USED, CONFIRM W/ PUMP MANUFACTURER THAT FITTINGS ARE COMPATIBLE WITH RAISING AND LOWERING OF PUMP.
3. SEE H-204 FOR SUMP CONSTRUCTION DETAILS.

PROFESSIONAL ENGINEER REGISTERED 3755 STATE OF IDAHO LAWRENCE M. FETTRETCHER 5/8/02

SUBCONTRACT NO.	S01-588058
REQUESTER:	
DESIGN:	BYRL THOMPSON
DRAWN:	JAY WARE
PROJECT NO.	
SPEC CODE	
FOR REVIEW/APPROVAL SIGNATURES SEE DAR NO.	DAR
EFFECTIVE DATE:	

INEEL (Idaho National Engineering & Environmental Laboratory) BECHTEL BWXT IDAHO, LLC

CH2MHILL MWH MONTGOMERY WATSON HARZA

INEEL CERCLA DISPOSAL FACILITY (ICDF)

LEAK DETECTION/LEACHATE COLLECTION SECTIONS AND DETAILS

SIZE	CAGE CODE	INDEX CODE NUMBER AREA	TYPE	CL	ORIG	DWG-	REV
D		B21	0100	02			0

SCALE: AS SHOWN CPP SHEET P-204

REVISIONS		
REV	DESCRIPTION	EFFECTIVE DATE:
0	APPROVED FOR CONSTRUCTION	14 MAY 2002

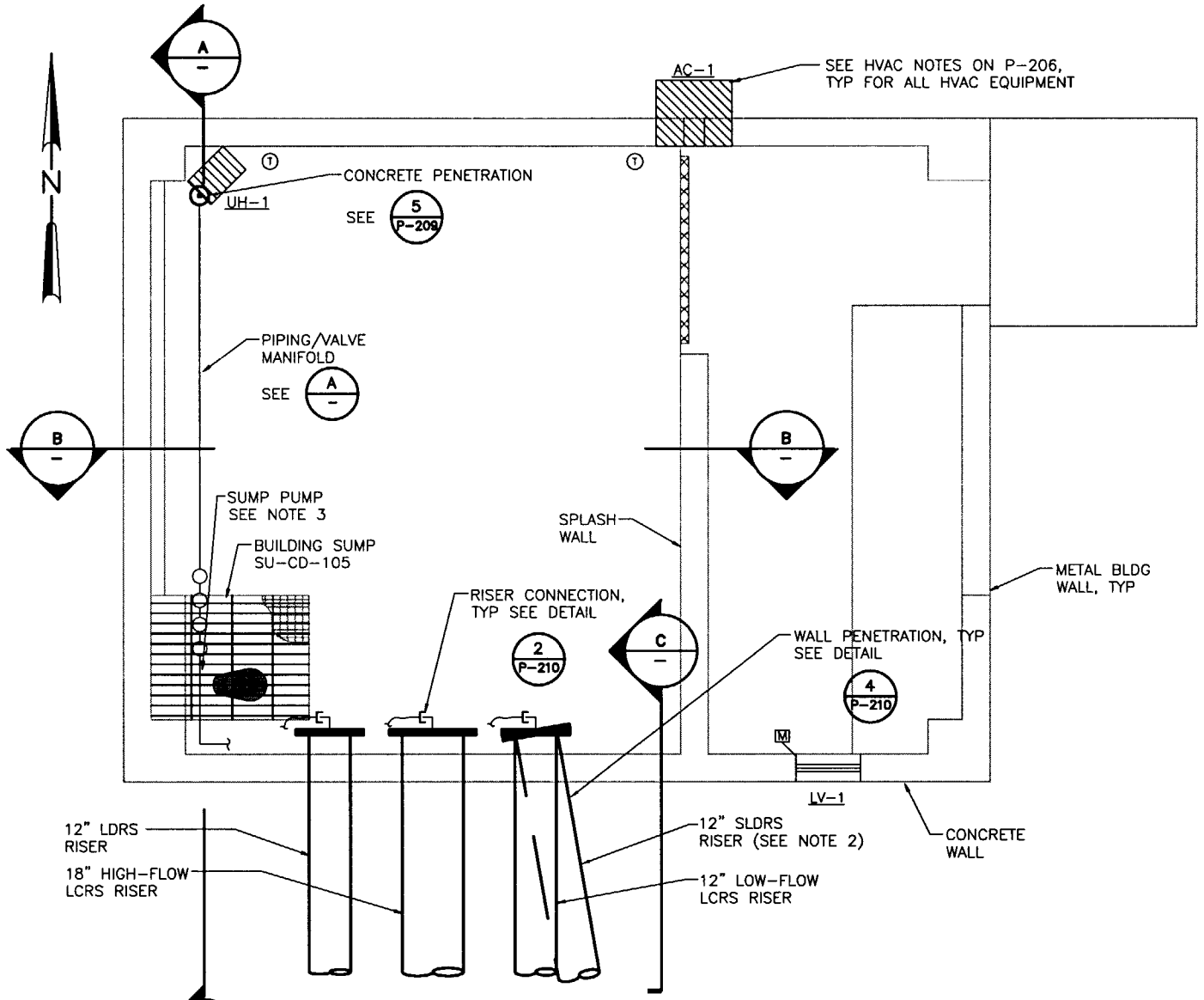

C4 LANDFILL CREST PAD BUILDING (CPP-1799)
1/2" = 1'-0"

Scale in Feet: 2 0 2 4

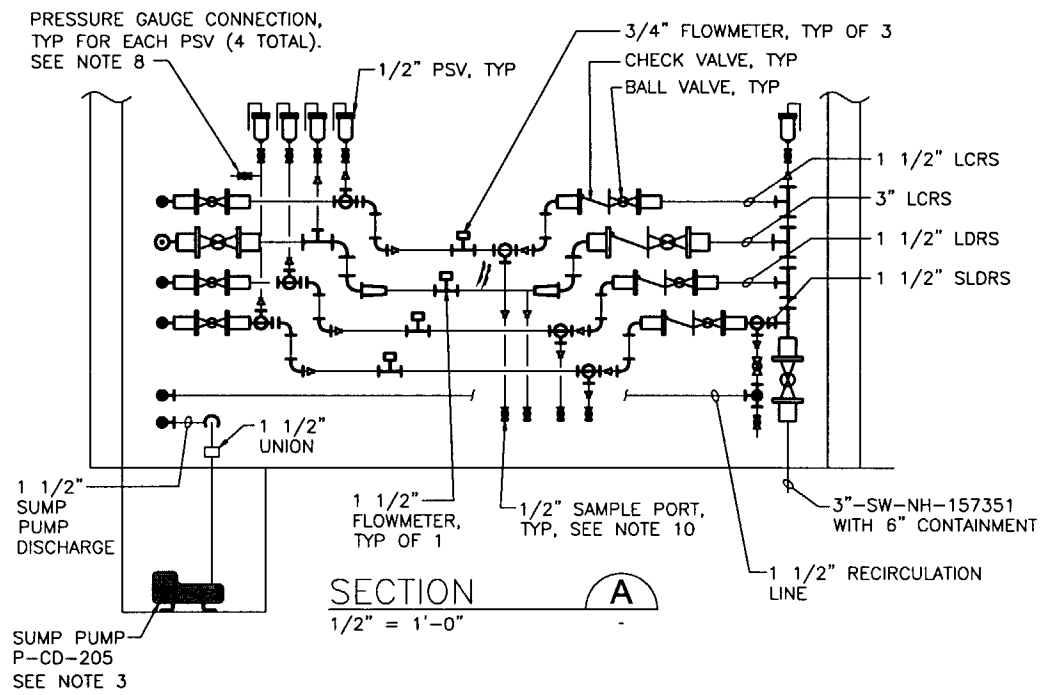

SECTION A
1/2" = 1'-0"

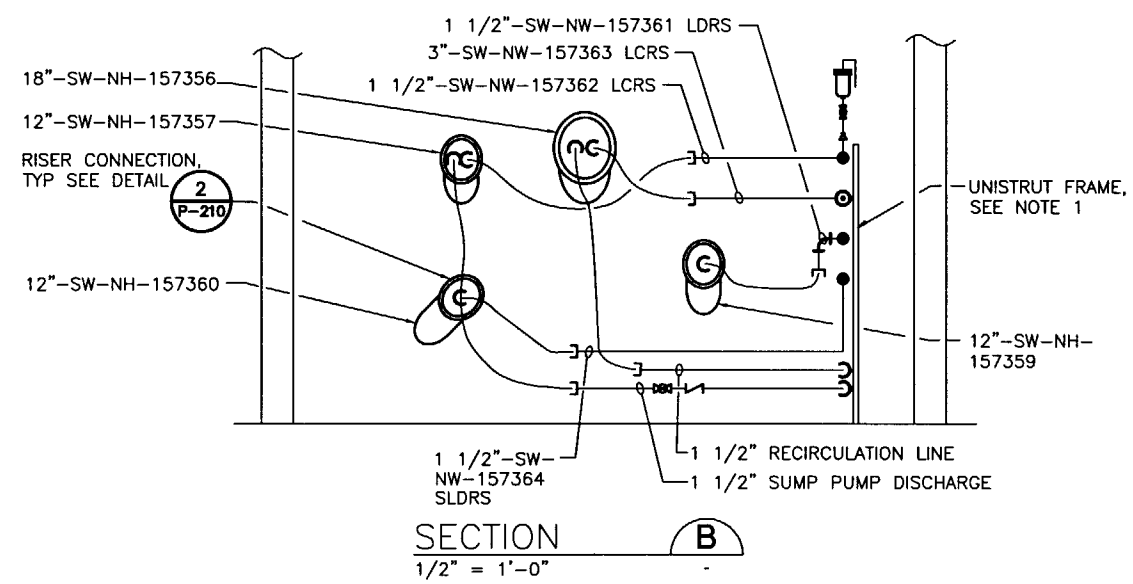

SECTION B
1/2" = 1'-0"

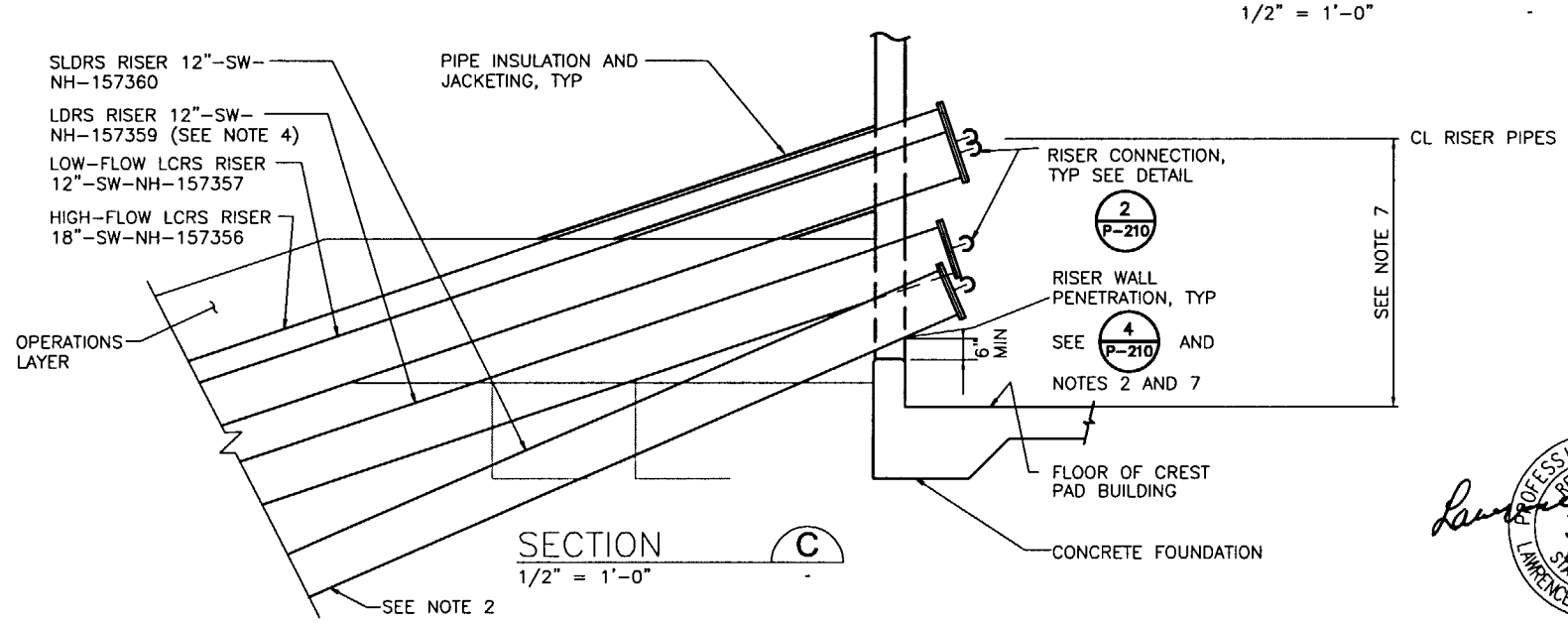

SECTION C
1/2" = 1'-0"

NOTES:

1. SUPPORT PIPING/VALVE MANIFOLD WITH UNISTRUT FRAME ANCHORED TO FLOOR AND ATTACHED TO BLDG STRUCTURAL FRAME.
2. BEND 12" SECONDARY LDRS RISER TO PENETRATE CREST PAD BUILDING ABOVE CURB. DO NOT EXCEED MINIMUM BENDING RADIUS OF 10 DIAMETERS OR AS SPECIFIED BY PIPE SUPPLIER FOR SDR OF PIPE SUPPLIED.
3. PROVIDE SUBMERSIBLE SUMP PUMP RATED FOR 34 GPM AT 10 FT TDH; (APPROX. 1/3 HP). PUMP SHALL BE COMPATIBLE WITH START/STOP CONTROL BY EXTERNAL FLOAT SWITCHES. NOTCH OUT GRATING AROUND PIPING TO ALLOW REMOVAL.
4. SEE DETAIL 3 (H-205) FOR TYPICAL GEOMEMBRANE BOOT DETAIL AT PIPE PENETRATIONS.
5. PROVIDE ONE COMMON MANUAL PUMP REMOVAL WINCH FOR RAISING AND LOWERING THE LEACHATE PUMPS AND ASSOCIATED DISCHARGE PIPING IN THE RISER. WINCH SHALL BE BRAKE (SPUR GEAR) WINCH WITH AUTOMATIC BRAKE; THERN MODEL NO. M4032PB, OR EQUAL. PROVIDE WINCH WITH SUFFICIENT CAPACITY TO HANDLE MINIMUM 180 LF (FOR LANDFILL PUMPS; APPROX. 120 LF FOR EVAPORATION POND LDRS PUMPS) OF 1/8" LIFTING CABLE (STAINLESS STEEL WIRE ROPE). LIFTING CABLE SHALL INCLUDE AND THE WINCH ACCOMMODATE A SWAGE BALL FITTING CABLE END FOR QUICK CONNECT/DISCONNECT. MOUNT WINCH ON STRUT CHANNEL FRAME ATTACHED TO INSIDE OF NORTH WALL. CHANNEL FRAME SHALL SPAN HORIZONTALLY TO ALLOW WINCH TO BE POSITIONED IN LINE WITH THE APPLICABLE RISER PIPE OPENING. FRAME SHALL PROVIDE SUFFICIENT CLEARANCE FOR WINCH HANDLE ROTATION.
6. PROVIDE TWO MANUAL HOSE REELS FOR SEPARATELY HANDLING THE LEACHATE PUMP POWER AND CONTROL CABLES. HOSE REELS SHALL BE HEAVY-DUTY HAND CRANK REELS WITH ADJUSTABLE SPOOL ROTATION DRAG AND SPOOL LOCK PINS. PROVIDE REELCRAFT MODEL NO. C33118LI (GRAINGER NO. 5Z338) OR EQUAL. INSTALL DROP-IN ANCHORS IN FLOOR THAT MATCH HOSE REEL "FEET" BOLT PATTERN FOR BOTH REELS. LEAVE BOLTS IN PLACE TO PREVENT ACCUMULATION OF DIRT, ETC.
7. FOR RISER PIPES, BEND TO MINIMUM RADIUS ALLOWED BY MANUFACTURER OR PROVIDE FITTINGS AS REQUIRED TO MAINTAIN MAXIMUM 4'-6" HEIGHT ABOVE CREST PAD BUILDING FLOOR.
8. PROVIDE ONE PORTABLE PRESSURE GAUGE WITH 0-100 PSI RANGE.
9. PROVIDE HYDRAULIC LIFT TABLE FOR HANDLING LEACHATE PUMPS AT EACH CREST PAD BUILDING. PROVIDE WESCO MODEL NO. LT-10-1836, OR EQUAL.
10. EXTEND SAMPLE LINES SO OPENING IS ABOVE TROUGH.

PROFESSIONAL ENGINEER REGISTERED STATE OF IDAHO LAWRENCE M. FETTKETHER 3755 5/8/02

SUBCONTRACT NO.	S01-588058
REQUESTER:	
DESIGN:	BILL FARMER
DRAWN:	JOSHUA PRETS
PROJECT NO.	
SPEC CODE	
FOR REVIEW/APPROVAL SIGNATURES SEE DAR NO.	DAR
EFFECTIVE DATE:	

INEEL (Idaho National Engineering & Environmental Laboratory) BECHTEL BWXT IDAHO, LLC

CH2MHILL MWH MONTGOMERY WATSON HARZA

INEEL CERCLA DISPOSAL FACILITY (ICDF)

LANDFILL CREST PAD BUILDING MECHANICAL PLAN

SIZE	CAGE CODE	INDEX CODE NUMBER AREA	TYPE	CL	ORIG	DWG-	REV
D		B21	0100	02			0

SCALE: AS SHOWN CPP SHEET P-205

REVISIONS		
REV	DESCRIPTION	EFFECTIVE DATE:
0	APPROVED FOR CONSTRUCTION	14 MAY 2002

HVAC SEQUENCE OF CONTROL

1. AC UNIT WILL OPERATE CONTINUOUSLY WHENEVER THE ROOM TEMPERATURE IS ABOVE 85 DEG F. THE ROOM THERMOSTAT SETPOINT IS 85 DEG. F. THE OUTSIDE AIR TEMPERATURE SENSOR WILL SHUT THE UNIT DOWN WHEN OUTDOOR TEMPERATURE DROPS BELOW 32 DEG. F. THE UNIT CONTROL PANEL HAS AN AUX. SWITCH TO OPEN THE RELIEF DAMPER WHEN THE AC UNIT IS ON.
2. UH WILL BE CONTROLLED BY THE HEATING THERMOSTAT SUPPLIED WITH THE UH. THE THERMOSTAT SETPOINT IS 50 DEG F.

HVAC EQUIPMENT LIST:

UH-1,2 – ELECTRIC UNIT HEATERS – TRANE, MODEL UHEC-053DACA, 5.0 KW, 460V/3PH. ACCESSORIES SHALL INCLUDE WALL MOUNTED THERMOSTAT FOR FREEZE PROTECTION. ELECTRICAL DATA: 6.1 MCA, 15 AMPS FUSE.

LV-1,2 – RELIEF LOUVER, RUSKIN, MODEL ELF375D, 700 CFM. 24"x24". PROVIDE WITH MOTORIZED DAMPER, DAMPER ACTUATOR – BELIMO, MODEL NF120US, 120 VAC, SPRING RETURN, INTERLOCK WITH AC-1,2.

AC-1,2 – WALL MOUNTED AIR CONDITIONER. BARD MODEL CT241RB3Z. 700 CFM @ 0.25" E.S.P. WITH RETURN GRILLE AND 1" WASHABLE FILTER, 20,000 BTUH TOTAL/12,200 BTUH SENSIBLE COOLING CAPACITY @ 120 DEG F. AMBIENT AND 85/72 DEG F DB/WB RETURN AIR. 208V/3 PH, 1/4 HP- BLOWER MOTOR. ELECTRICAL DATA: SINGLE POINT, 3 KW STRIP HEATER, 14 MCA, 20 AMPS FUSE. ACCESSORIES SHALL INCLUDE OVERSIZED CONDENSER, EIFMC-2X ECONOMIZER, MBC-2X SIDE MOUNTING BRACKETS, SGC-2 SUPPLY GRILLE, RFGC-2 RETURN AIR FILTER GRILLE 14x12, BRUSHED ALUMINUM AND LOW AMBIENT CONTROL KIT. PROVIDE MANUFACTURER'S REQUIRED THERMOSTAT AND CONTROL PANEL. TYP. OF 2.

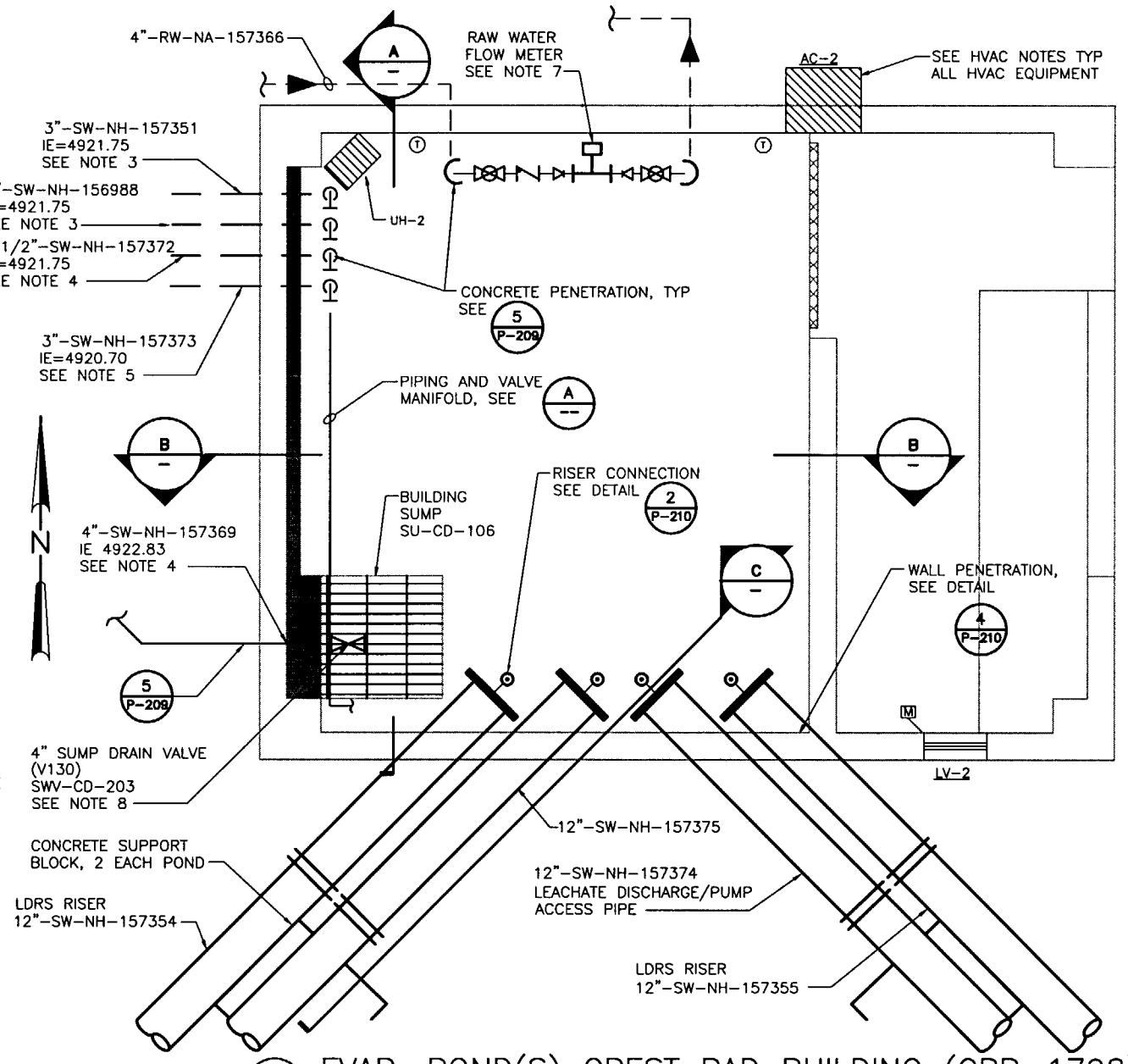

C4 EVAP. POND(S) CREST PAD BUILDING (CPP-1798)
1/2" = 1'-0"

NOTES:

1. PROVIDE ONE COMMON MANUAL PUMP REMOVAL WINCH FOR RAISING AND LOWERING THE LEACHATE PUMPS AND ASSOCIATED DISCHARGE PIPING IN THE RISER. WINCH SHALL BE BRAKE (SPUR GEAR) WINCH WITH AUTOMATIC BRAKE; THERN MODEL NO. M4032PB, OR EQUAL. PROVIDE WINCH WITH SUFFICIENT CAPACITY TO HANDLE MINIMUM 180 LF (FOR LANDFILL PUMPS; APPROX. 120 LF FOR EVAPORATION POND LDRS PUMPS) OR 1/8" LIFTING CABLE (STAINLESS STEEL WIRE ROPE). LIFTING CABLE SHALL INCLUDE AND THE WINCH ACCOMMODATE A SWAGE BALL FITTING CABLE END FOR QUICK CONNECT/DISCONNECT. MOUNT WINCH ON STRUT CHANNEL FRAME ATTACHED TO INSIDE OF NORTH WALL. CHANNEL FRAME SHALL SPAN HORIZONTALLY TO ALLOW WINCH TO BE POSITIONED IN LINE WITH THE APPLICABLE RISER PIPE OPENING. FRAME SHALL PROVIDE SUFFICIENT CLEARANCE FOR WINCH HANDLE ROTATION.
2. PROVIDE TWO MANUAL HOSE REELS FOR SEPARATELY HANDLING THE LEACHATE PUMP POWER AND CONTROL CABLES. HOSE REELS SHALL BE HEAVY-DUTY HAND CRANK REELS WITH ADJUSTABLE SPOOL ROTATION DRAG AND SPOOL LOCK PINS. PROVIDE REELCRAFT MODEL NO. C33118LI (GRAINGER NO. 5Z338) OR EQUAL. INSTALL DROP-IN ANCHORS IN FLOOR THAT MATCH HOSE REEL "FEET" BOLT PATTERN FOR BOTH REELS. LEAVE BOLTS IN PLACE TO PREVENT ACCUMULATION OF DIRT, ETC.
3. SLOPE LEACHATE FORCE MAIN AND SSSTF WASTEWATER LINES BACK TO LEAK DETECTION VAULT AT 1% MINIMUM SLOPE.
4. SLOPE SUMP PUMP DISCHARGE AND ALL DRAINS TO COMBINED SUMP AT 1% MINIMUM SLOPE.
5. SLOPE TRUCK LOADING LINE FROM BOTH ENDS TO LOW POINT ADJACENT TO COMBINED SUMP AT 1% MINIMUM SLOPE.
6. PIPE HEIGHT SHALL BE 4'-0" MAXIMUM ABOVE FLOOR OF EVAPORATION CREST PAD BUILDING TO PIPE CENTERLINE.
7. PROVIDE 1 1/2" FLOW METER (BY LEACHATE PUMP SUPPLIER). MOUNT ON WALL BELOW WINCH SUPPORT FRAME.
8. INSTALL VALVE AS LOW AS POSSIBLE ALLOWING FOR FLANGE CLEARANCE FROM SUMP FLOOR. EXTEND OPERATOR TO GRATING LEVEL WITH HOLE CUT FOR ACCESS TO SQUARE NUT.
9. PROVIDE HYDRAULIC LIFT TABLE FOR HANDLING LEACHATE PUMPS AT EACH CREST PAD BUILDING. PROVIDE WESCO MODEL NO. LT-10-1836, OR EQUAL.
10. PROVIDE ONE PORTABLE TRANSFER PUMP AS SPECIFIED IN SECTION 11312, LEACHATE PUMPS. TRANSFER PUMP SHALL HAVE SUFFICIENT POWER AND CONTROL CABLE LENGTH TO REACH FROM THE BOTTOM OF POND SLOPE, UP THE SLOPE, THROUGH THE DISCHARGE RISER PIPE, AND INTO THE CREST PAD BUILDING FOR CONNECTION AT THE APPLICABLE TERMINAL BLOCK/DISCONNECT SWITCH. THE TRANSFER PUMP DISCHARGE SHALL BE THROUGH FLEXIBLE HOSE (11906 ROYALFLEX, VINYL NITRILE, BY BOSTON INDUSTRIAL PRODUCTS; OR EQUAL) FROM THE BOTTOM OF POND SLOPE, UP THE SLOPE, THROUGH THE DISCHARGE RISER PIPE, AND INTO THE CREST PAD BUILDING FOR CONNECTION TO THE PIPING MANIFOLD ON THE SOUTH WALL. TRANSFER PUMP TO BE LOWERED IN PLACE WITH BOOM TRUCK.
11. PROVIDE "NORMAL" HDPE DISCHARGE PIPE EXTENDED FROM FLANGE CONNECTION TO AN ELEVATION TWO FEET BELOW TOP OF BERM. FOR PONDS TRANSFER, REMOVE DISCHARGE PIPE AT FLANGE AND INSERT TRANSFER PUMP DISCHARGE HOSE AND CABLES THROUGH RISER PIPE INTO CREST PAD BUILDING.
12. SUPPORT PIPING/VALVE MANIFOLD WITH UNISTRUT FRAME ANCHORED TO FLOOR AND ATTACHED TO BLDG STRUCTURAL FRAME.

HVAC GENERAL NOTES

1. BUILDING SPECIFICATIONS, DRAWINGS AND LATEST REVISIONS ON CONTRACT DOCUMENTS FOR MECHANICAL WORK SHALL APPLY TO THIS DRAWING.
2. ALL WORK SHALL COMPLY WITH ALL APPLICABLE CODES AND REGULATIONS.
3. CHECK, VERIFY AND MAKE OPERABLE ALL NEW EQUIPMENT TO COMPLY WITH MANUFACTURER'S SPECIFICATIONS.
4. ALL WALL PENETRATIONS SHALL BE SEALED WATER TIGHT. PROVIDE FLASHING AND COUNTER FLASHING AS REQUIRED.
5. COORDINATE ALL WORK WITH OTHER TRADES AND STRUCTURE.
6. THE MECHANICAL DRAWINGS ARE DIAGRAMMATIC IN CHARACTER AND DO NOT NECESSARILY INDICATE EVERY DETAIL.
7. MECHANICAL SUB-CONTRACTOR SHALL FURNISH STARTERS FOR ALL THREE-PHASE MECHANICAL EQUIPMENT (EXCEPT FOR STARTERS THAT ARE SHOWN TO BE PROVIDED IN MOTOR CONTROL CENTERS). STARTERS SHALL HAVE THREE-LEG CLASS 10 TRIP-TREE OVERLOAD PROTECTION, WITH MANUAL RESET, AND SHALL BE NEMA RATED. STARTERS SHALL BE INSTALLED BY ELECTRICAL CONTRACTOR.

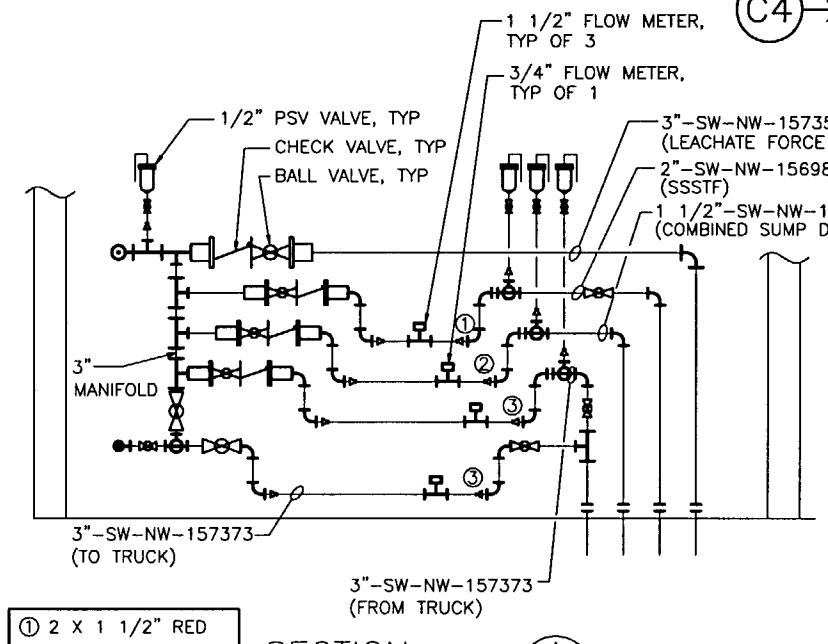

① 2 X 1 1/2" RED
② 1 1/2 X 3/4" RED
③ 3" X 1 1/2" RED

SECTION A
1/2" = 1'-0"

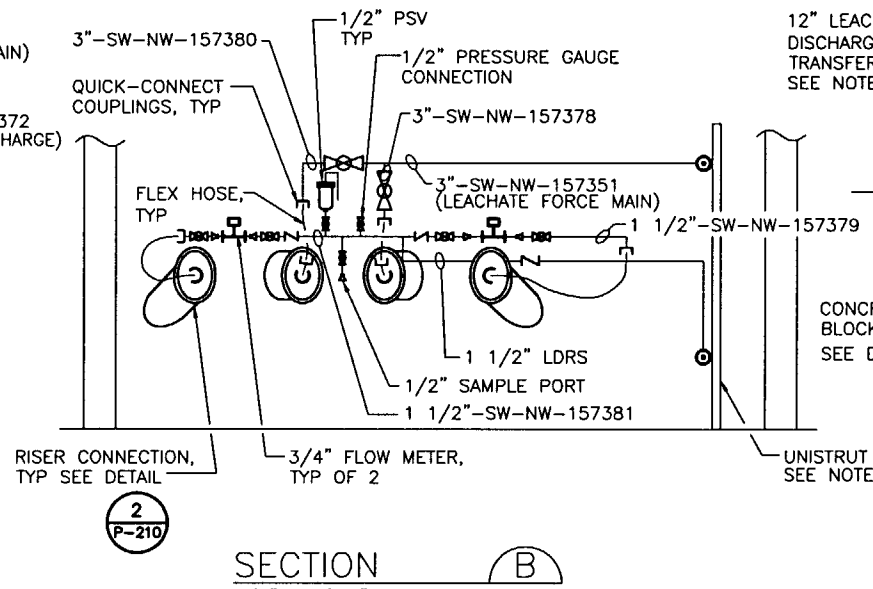

SECTION B
1/2" = 1'-0"

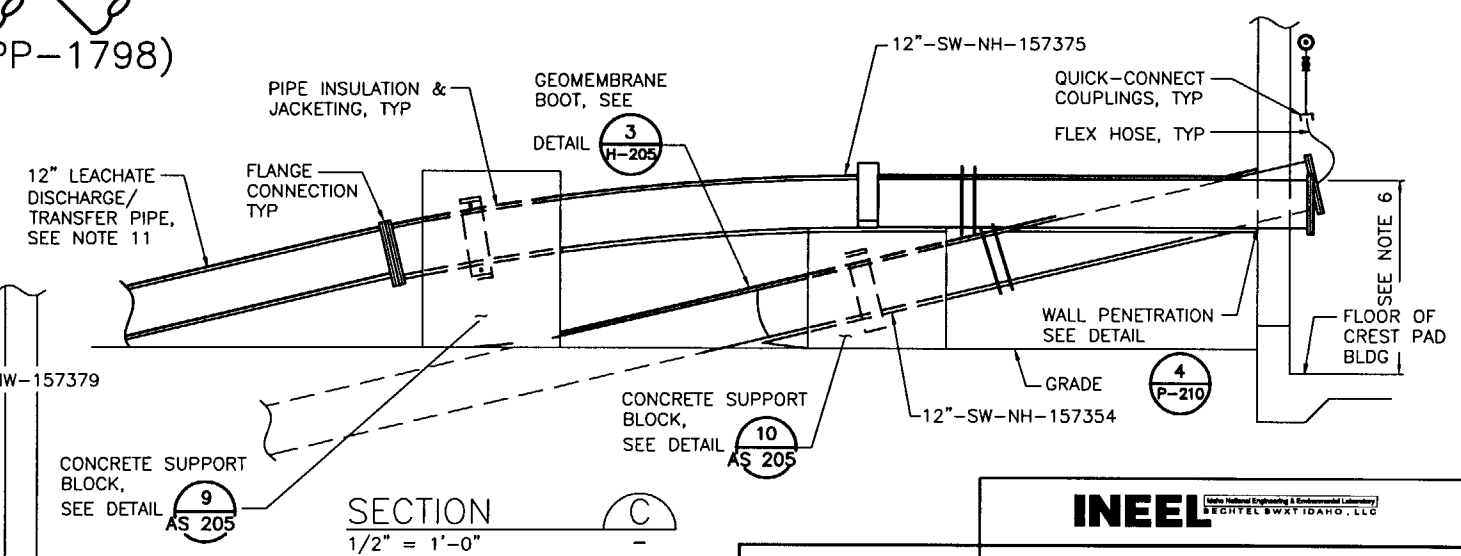

SECTION C
1/2" = 1'-0"

PROFESSIONAL ENGINEER REGISTERED STATE OF IDAHO LAWRENCE M. FETTKETHER 3755

SUBCONTRACT NO.	S01-588058
REQUESTER:	
DESIGN:	BILL FARMER
DRAWN:	JOSHUA PRETS
PROJECT NO.	
SPEC CODE	
FOR REVIEW/APPROVAL SIGNATURES SEE DAR NO.	DAR
EFFECTIVE DATE:	

INEEL (Idaho National Engineering & Environmental Laboratory) BECHTEL BWXT IDAHO, LLC

CH2MHILL MWH MONTGOMERY WATSON HARZA

INEEL CERCLA DISPOSAL FACILITY (ICDF)

EVAP POND(S) CREST PAD BUILDING MECHANICAL PLAN AND SECTIONS

SIZE	CAGE CODE	INDEX CODE NUMBER AREA	TYPE	CL	ORIG	DWG-	REV
D		B21	0100	02			0

SCALE: AS SHOWN CPP SHEET P-206

REVISIONS		
REV	DESCRIPTION	EFFECTIVE DATE:
0	APPROVED FOR CONSTRUCTION	14 MAY 2002

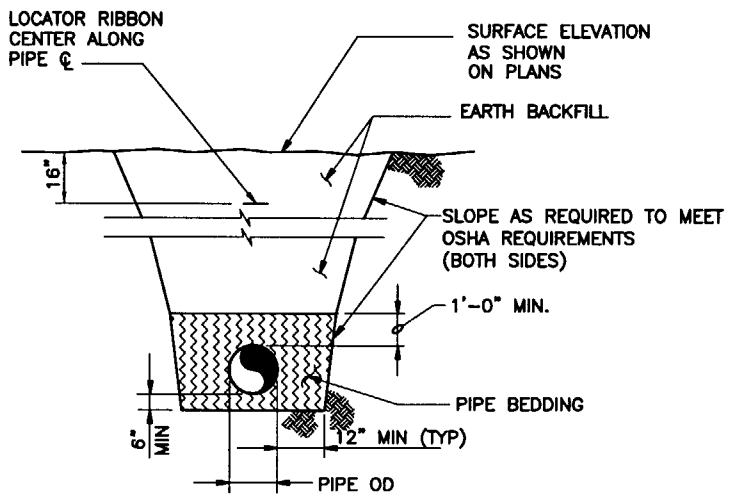

NOTE:

1. MINIMUM COVER OVER PIPE CROWN = 6'-0"
2. MIN. 1.0' HORIZONTAL SEPARATION (PIPE OD) BETWEEN ADJACENT PIPES UNLESS SHOWN OTHERWISE.

1 / P-201, P-202 — PIPE TRENCH
N.T.S.

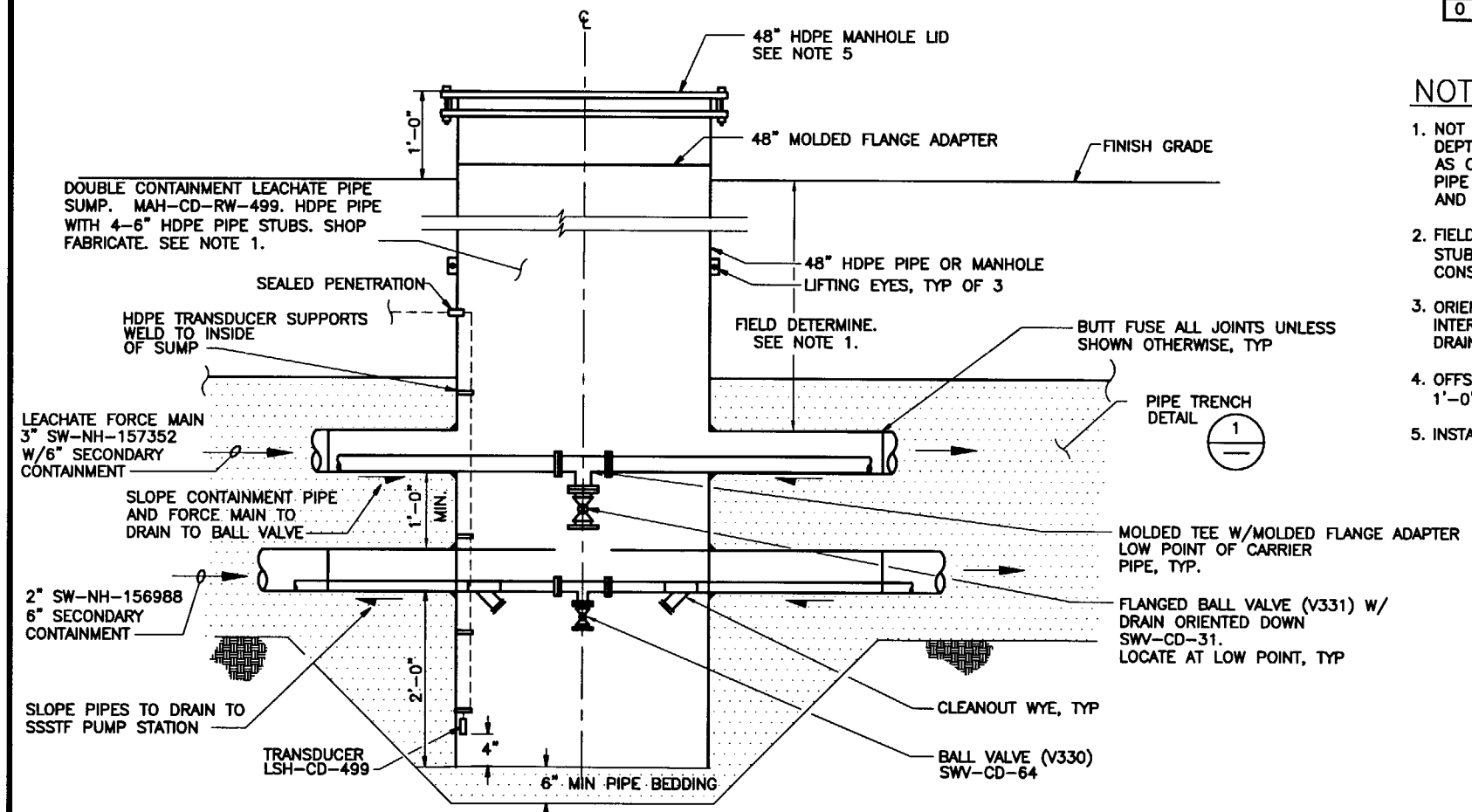

2 / P-202 — DOUBLE CONTAINMENT LEACHATE PIPE SUMP
N.T.S.

NOTES:

1. NOT ALL SUMP DIMENSIONS SHOWN. DETERMINE SUMP DEPTH BASED ON PIPE AND FINISH GRADE ELEVATIONS AS CONSTRUCTED IN FIELD. MAINTAIN PIPE SLOPE AND PIPE COVER REQUIREMENTS SHOWN ON THE DRAWINGS AND AS REQUIRED IN THE SPECS.
2. FIELD DETERMINE ORIENTATIONS AND PIPE INVERTS OF STUBOUTS. COORDINATE 2" SW PIPING W/SSSTF CONSTRUCTION.
3. ORIENT BALL VALVES AND TEES TO MINIMIZE INTERFERENCE. TEES CAN BE OFF-VERTICAL BUT MUST DRAIN.
4. OFFSET LEACHATE FORCE MAIN AND 2" SW FROM 1'-0" FROM CENTERLINE OF LEACHATE PIPE SUMP.
5. INSTALL 4 BOLLARDS AROUND MANHOLE LID.

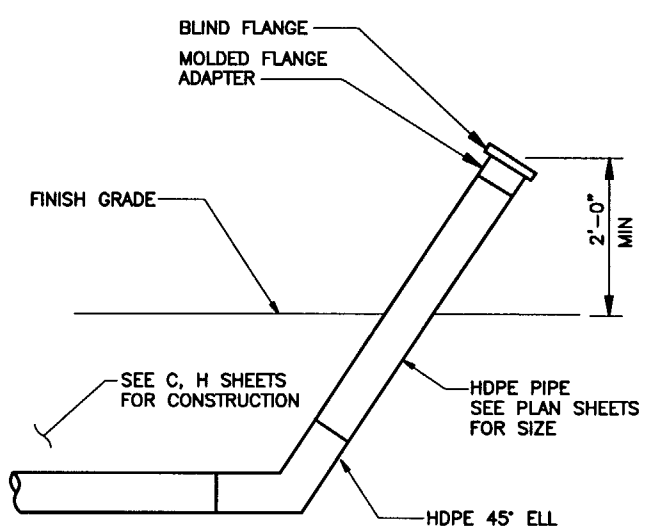

3 / P-202, P-301, P-302 — LEACHATE CLEANOUT
N.T.S.

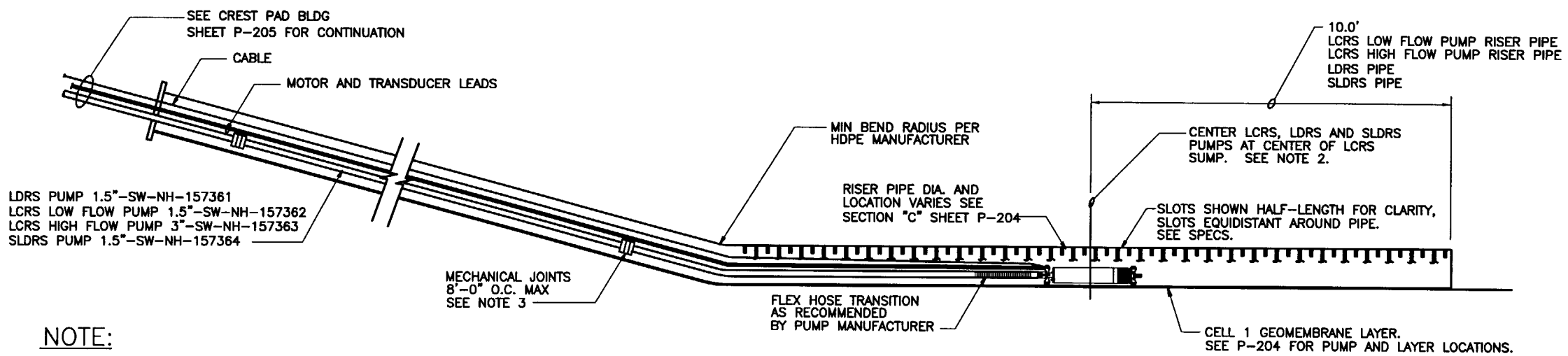

NOTE:

1. CREST PAD BUILDING, ANCHOR TRENCH AND TOP OF BERM AT SIDE SLOPE NOT SHOWN. SEE SHEET P-205.
2. INSTALL PUMP AND PUMP DISCHARGE PIPING AT PIPE TEMP BETWEEEN 50-70°F.
3. PROVIDE FIBER GLASS-FILLED POLYPROPYLENE QUICK-CONNECT CAM COUPLINGS WITH STAINLESS STEEL RINGS, ARMS, AND PINS THREADED ONTO TRANSITION FITTINGS (HDPE X STAINLESS STEEL THREADED NIPPLE) AT EACH JOINT LOCATION. WRAP PLASTIC WIRETIE THROUGH PINS AND AROUND COUPLINGS TO HOLD ARMS CLOSED.

   ALTERNATIVE EQUIPMENT CONNECTION SYSTEMS WILL BE CONSIDERED, SUBJECT TO APPROVAL.

4 / P-204 — TYPICAL RISER PIPE AND SUMP INSTALLATION
N.T.S.

PROFESSIONAL ENGINEER REGISTERED 5755 STATE OF IDAHO LAWRENCE M. FETTKETHER 5/8/02

SUBCONTRACT NO.	S01-588058
REQUESTER:	
DESIGN:	BYRL THOMPSON
DRAWN:	BOB LATTA
PROJECT NO.	
SPEC CODE	
FOR REVIEW/APPROVAL SIGNATURES SEE DAR NO.	DAR
EFFECTIVE DATE:	

INEEL — Idaho National Engineering & Environmental Laboratory — BECHTEL BWXT IDAHO, LLC

CH2MHILL — MWH MONTGOMERY WATSON HARZA

INEEL CERCLA DISPOSAL FACILITY (ICDF)

LEAK DETECTION/LEACHATE COLLECTION SECTIONS AND DETAILS

SIZE	CAGE CODE	INDEX CODE NUMBER (AREA / TYPE / Q / ORIG)	DWG-	REV
D		B21 / 0100 / 02	CPP	0

SCALE: AS SHOWN — SHEET P-207

REVISIONS		
REV	DESCRIPTION	EFFECTIVE DATE:
0	APPROVED FOR CONSTRUCTION	14 MAY 2002

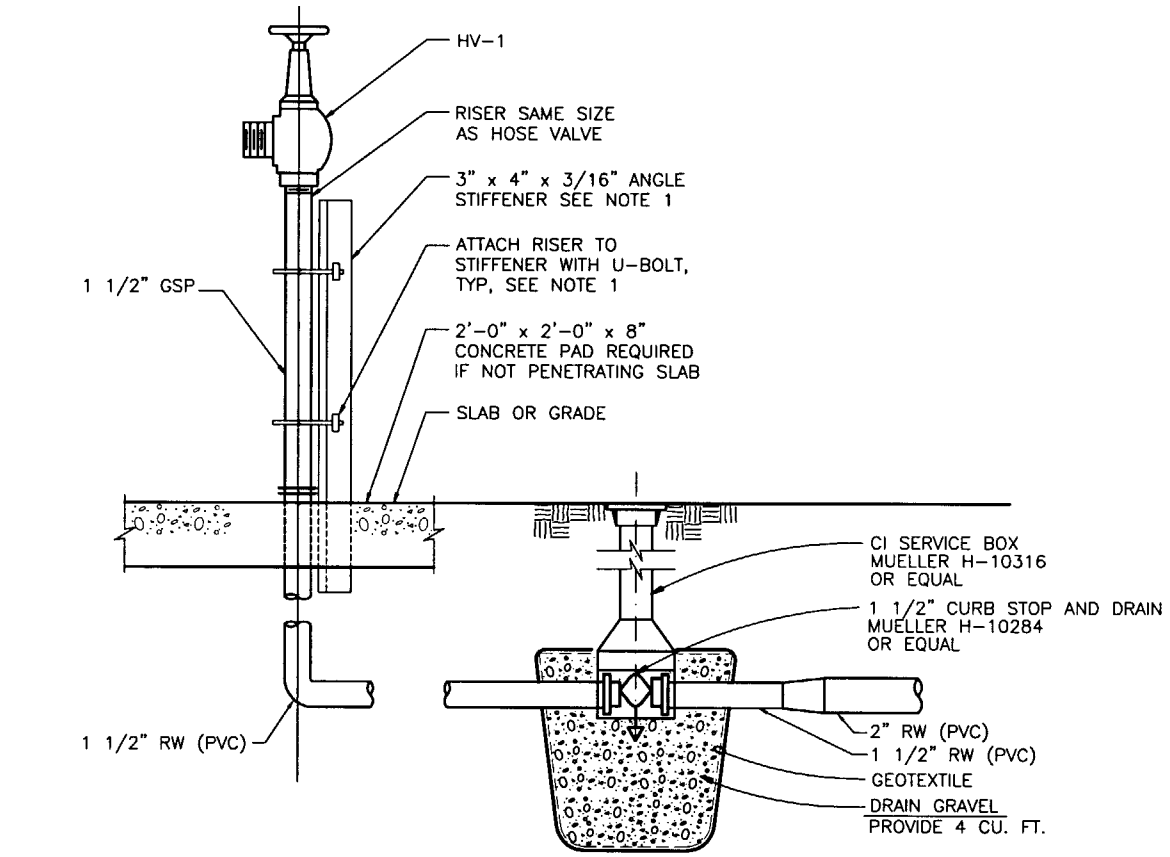

NOTE:

1. ANGLE STIFFENER AND RISER ATTACHMENT HARDWARE SHALL BE GALVANIZED STEEL

1 EXTERIOR HOSE BIBB

AS-203, P-201, P-202, P-203 — NTS

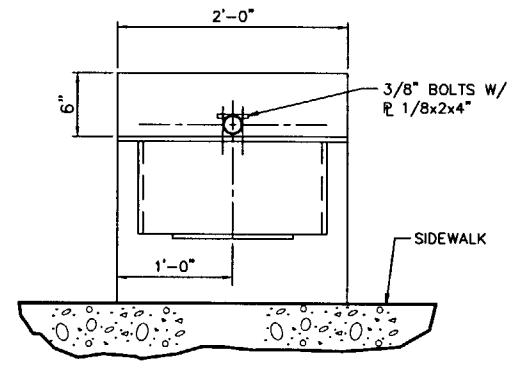

PLAN-POST MOUNT

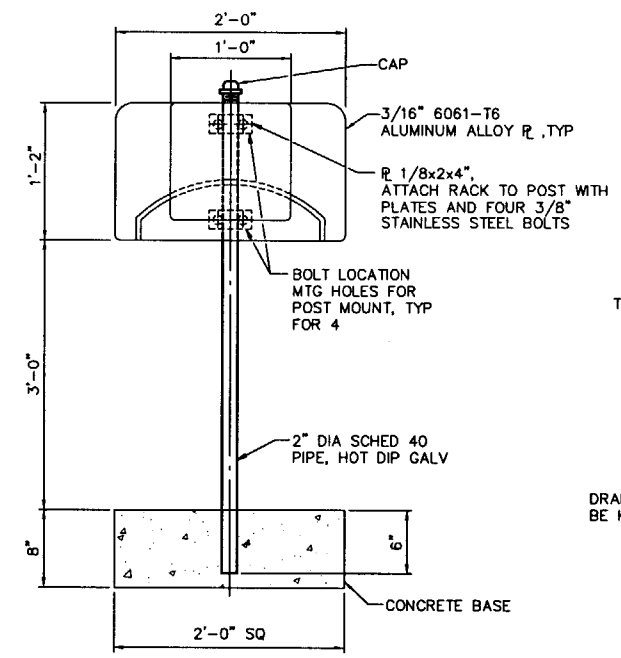

2 HOSE RACK

AS-203, P-203 — NTS

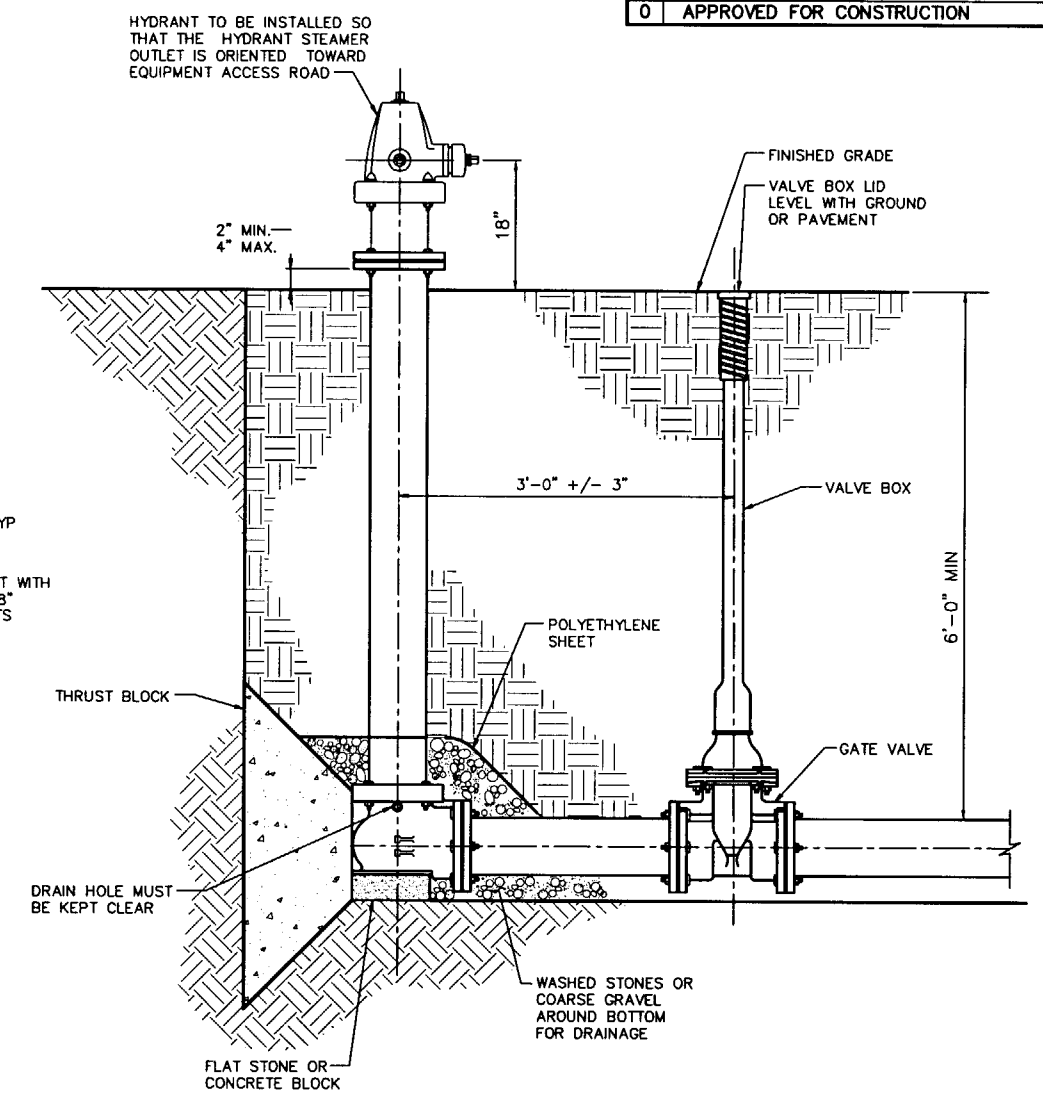

3 FIRE HYDRANT DETAIL

P-202, P-203 — NTS

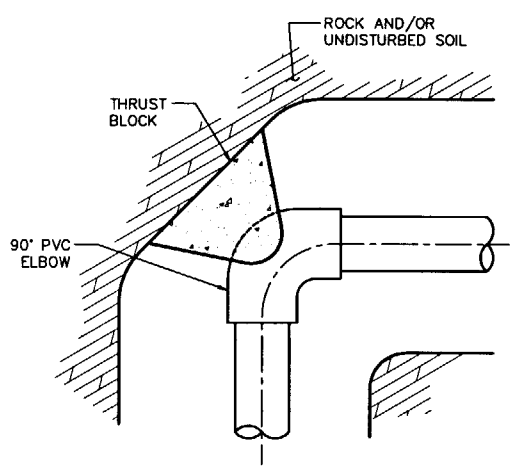

90° ELBOW

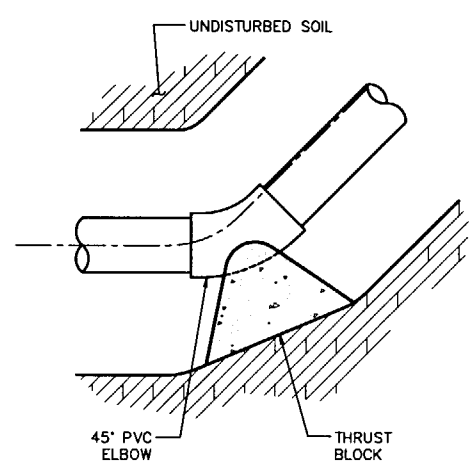

45° ELBOW

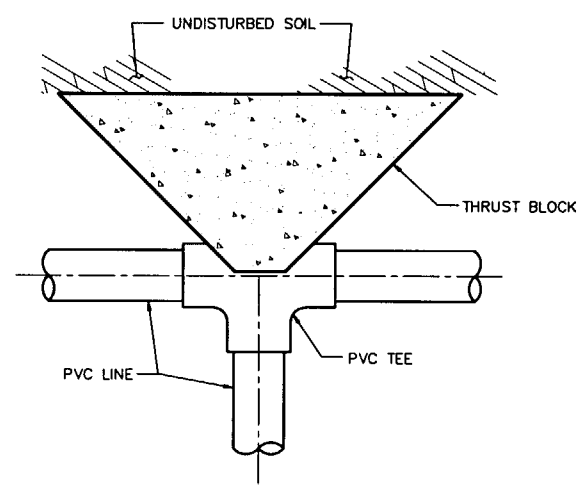

TEE

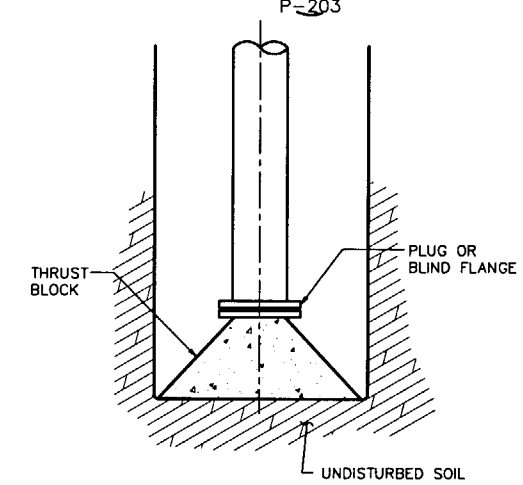

BLIND FLANGE

4 TYPICAL THRUST BLOCK DETAILS

P-202 — NTS

PROFESSIONAL ENGINEER REGISTERED 3755 STATE OF IDAHO LAWRENCE M. FETTKETHER 5/8/02

SUBCONTRACT NO.	S01-588058
REQUESTER:	
DESIGN:	BILL FARMER
DRAWN:	JOSHUA PRETS
PROJECT NO.	
SPEC CODE	
FOR REVIEW/APPROVAL SIGNATURES SEE DAR NO.	DAR
EFFECTIVE DATE:	

INEEL (Idaho National Engineering & Environmental Laboratory) BECHTEL BWXT IDAHO, LLC

CH2MHILL — MWH MONTGOMERY WATSON HARZA

INEEL CERCLA DISPOSAL FACILITY (ICDF)

PIPING DETAILS

SIZE	CAGE CODE	INDEX CODE NUMBER AREA	TYPE	Q	ORG	DWG-	REV
D		B21	0100	02			0

SCALE: AS SHOWN — CPP — SHEET P-208

REVISIONS		
REV	DESCRIPTION	EFFECTIVE DATE:
0	APPROVED FOR CONSTRUCTION	14 MAY 2002

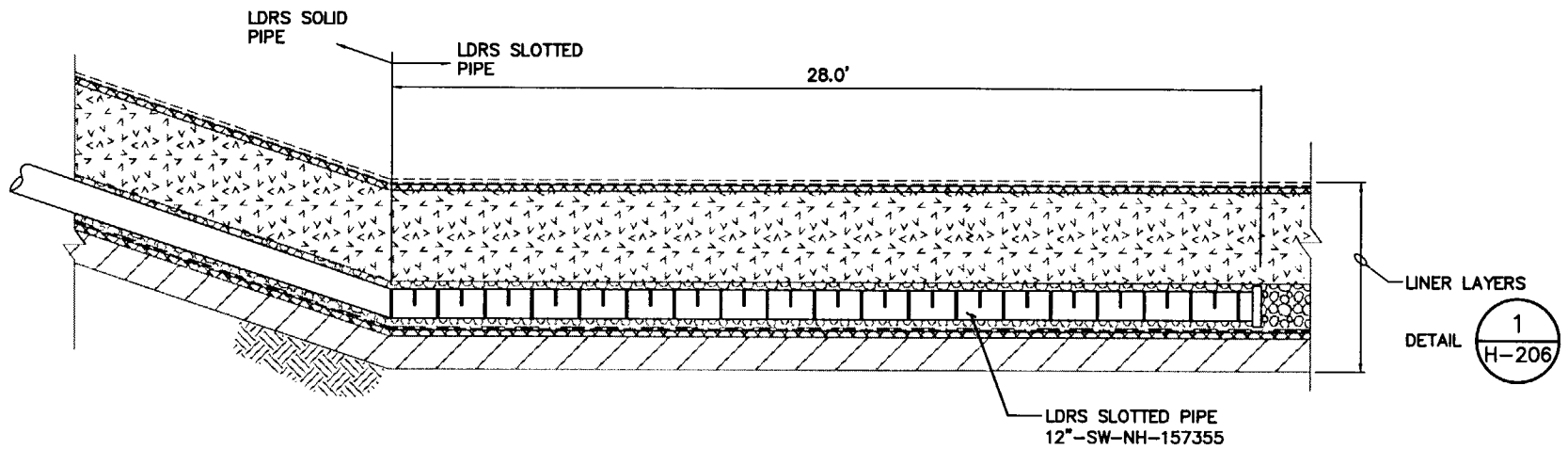

A / P-203 EVAPORATION POND LDRS PIPING AT SUMP
NTS

NOTE:
1. SEE 4 / P-207 FOR PUMP LOCATION AND PIPING, SIM.

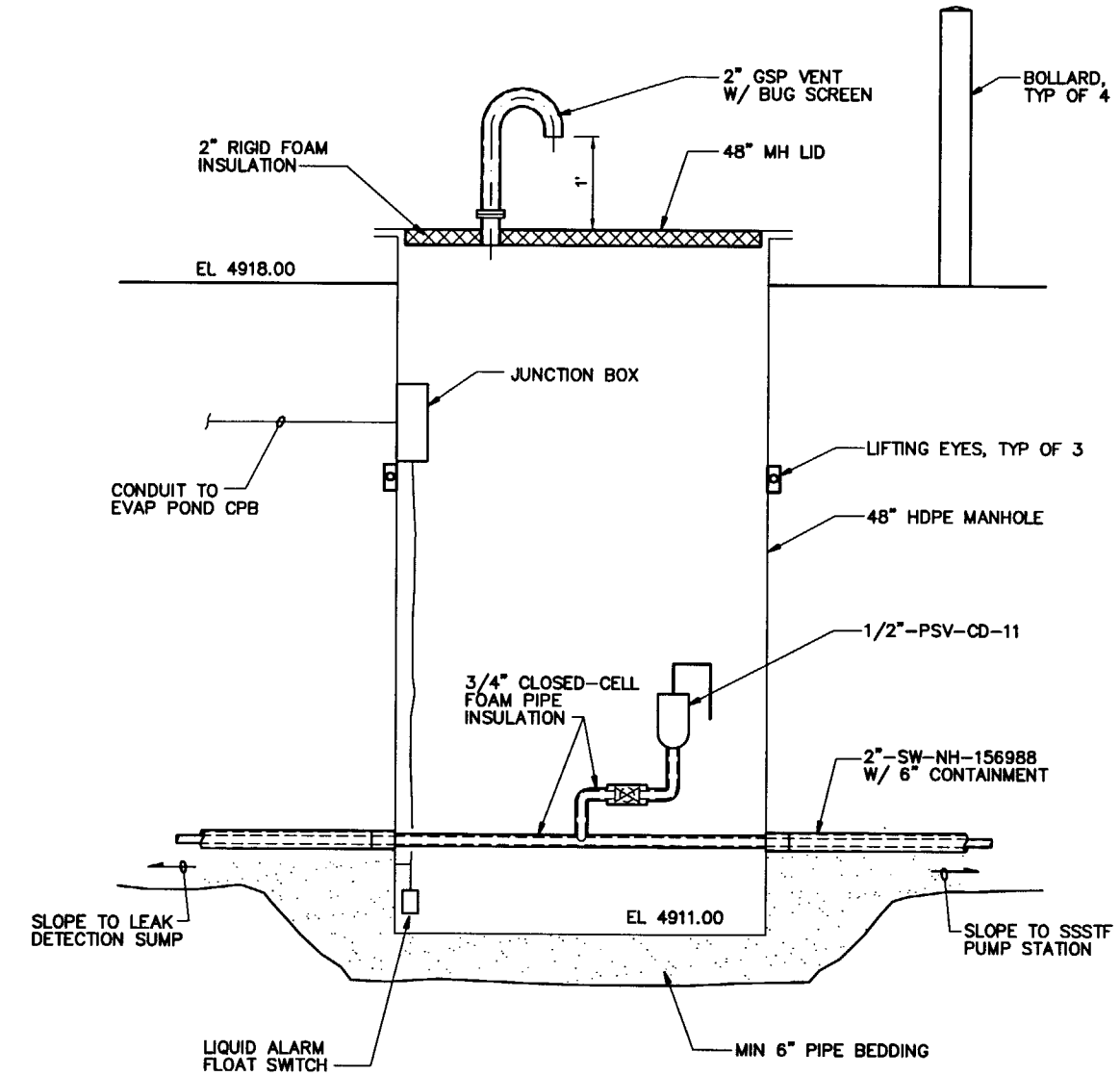

1 / P-201 P-202 AIR RELEASE STATION
NTS

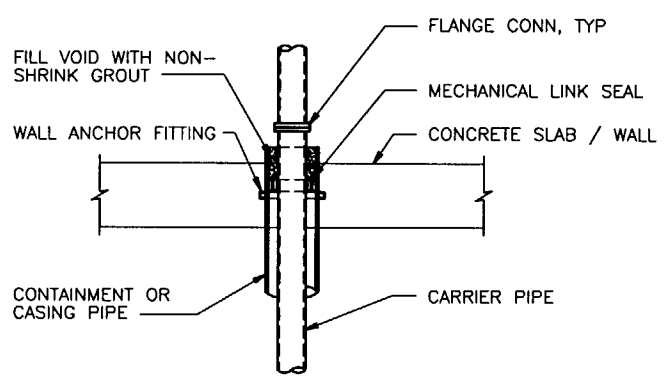

5 / P-205 P-206 P-210 CONCRETE PENETRATION DETAIL
1"=1'-0"

PROFESSIONAL ENGINEER REGISTERED 3755 STATE OF IDAHO LAWRENCE M. FETTKETHER 5/7/02

SUBCONTRACT NO.	S01-588058
REQUESTER:	
DESIGN:	BYRL THOMPSON
DRAWN:	JOSHUA PRETS
PROJECT NO.	
SPEC CODE	
FOR REVIEW/APPROVAL SIGNATURES SEE DAR NO.	DAR
EFFECTIVE DATE:	

INEEL Idaho National Engineering & Environmental Laboratory BECHTEL BWXT IDAHO, LLC

CH2MHILL MWH MONTGOMERY WATSON HARZA

INEEL CERCLA DISPOSAL FACILITY (ICDF)

LEACHATE COLLECTION SYSTEM DETAILS

SIZE	CAGE CODE	INDEX CODE NUMBER AREA	TYPE	CL	ORG	DWG-	REV
D		B21	0100	02			0

SCALE: AS SHOWN CPP SHEET P-209

REVISIONS		
REV	DESCRIPTION	EFFECTIVE DATE:
0	APPROVED FOR CONSTRUCTION	14 MAY 2002

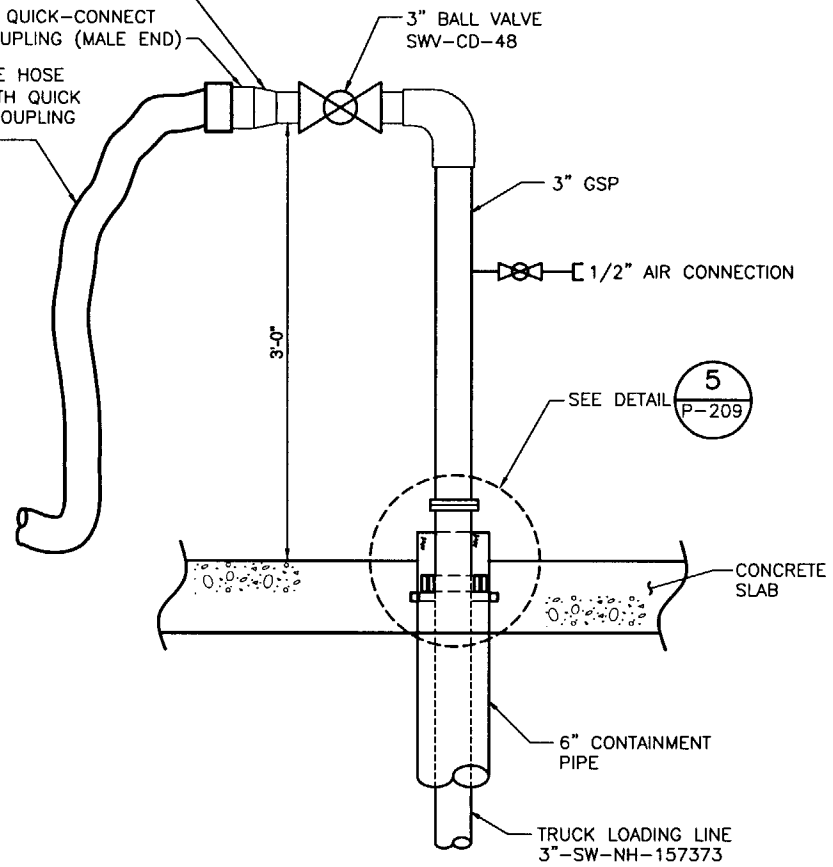

1 P-203 AS-203 TRUCK LOADING CONNECTION DETAIL
NTS

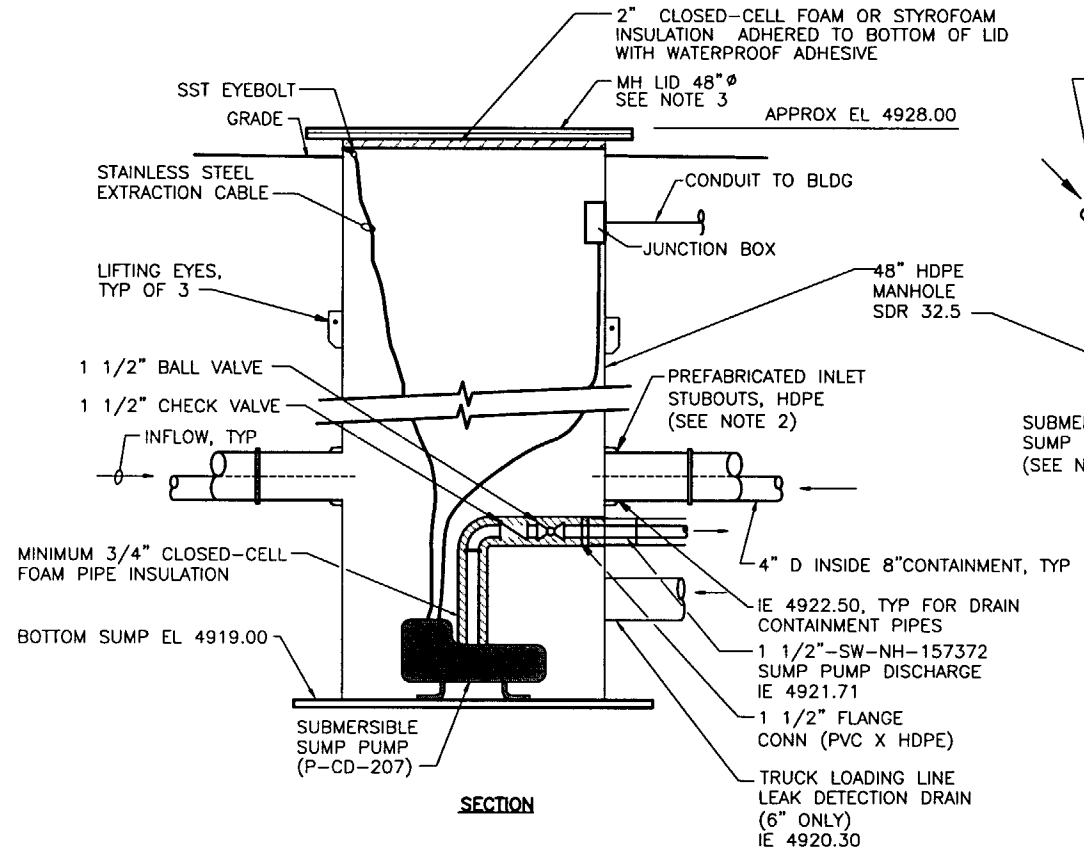

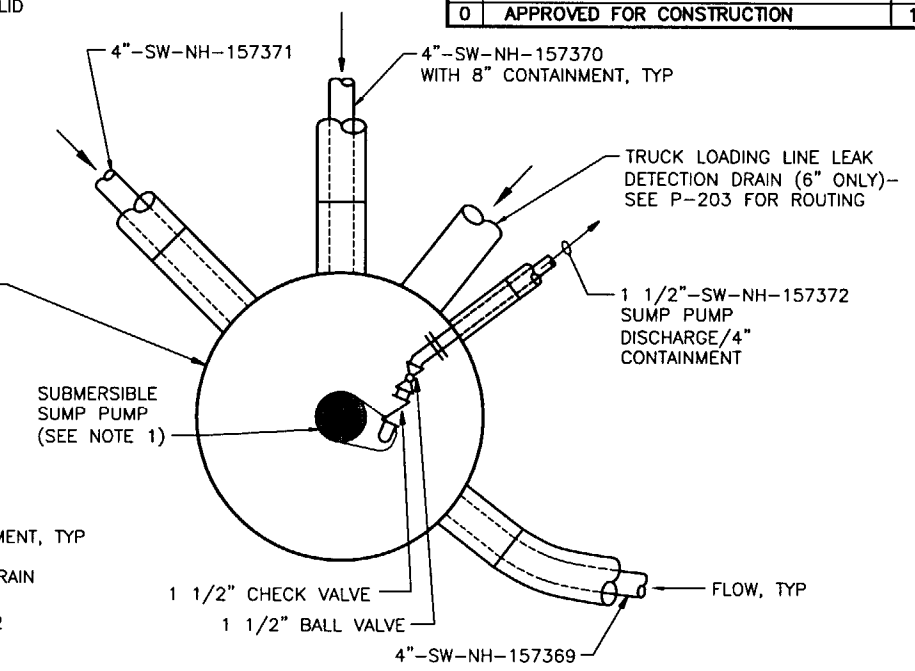

3 P-203 COMBINED SUMP MANHOLE (SU-CD-107)
NTS

NOTES:

COMBINED SUMP MANHOLE

1. PROVIDE 1 HP SUBMERSIBLE SUMP PUMP RATED FOR 50 GPM AT 30 FT TDH. INCLUDE EXPLOSION-PROOF MOTOR AND INTRINSICALLY SAFE COMPONENTS AND WIRING; INTEGRAL FLOAT SWITCH FOR AUTOMATIC START/STOP; HAND/OFF/AUTO CONTROL SWITCH MOUNTED INSIDE BLDG.
2. PROVIDE 3 – 8" AND 1 – 6" INLET CONNECTIONS WITH ORIENTATIONS SHOWN IN PLAN VIEW. PROVIDE 1 – 4" OUTLET CONNECTION WITH ORIENTATION SHOWN IN PLAN VIEW.
3. INSTALL 4 BOLLARDS AROUND MANHOLE LID.

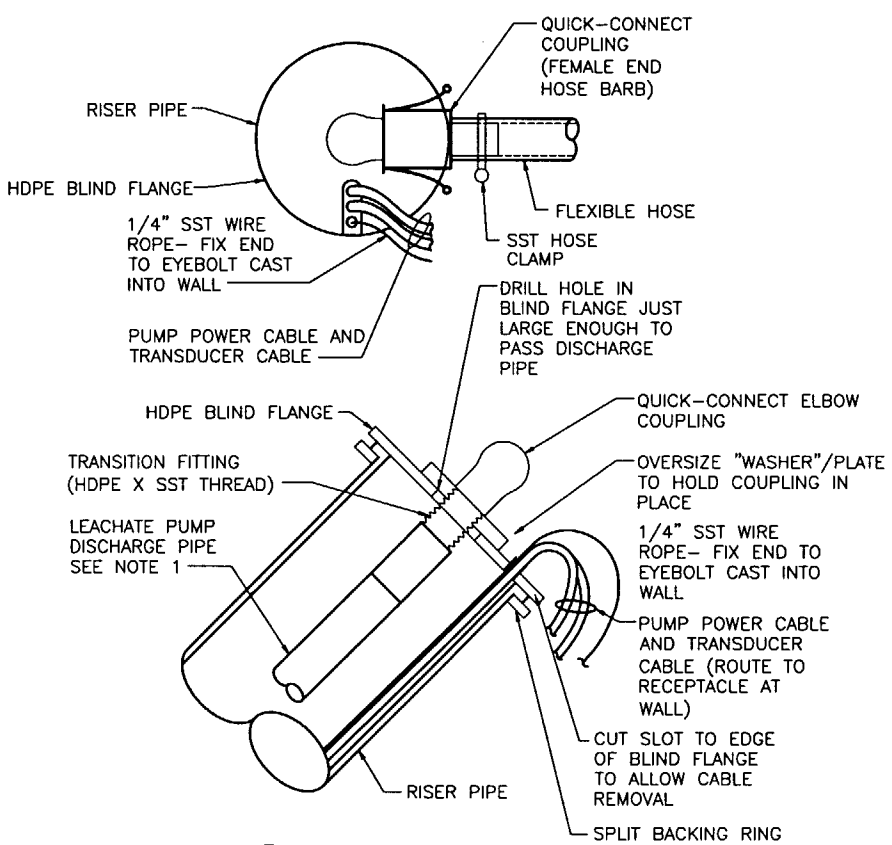

2 P-205 P-206 RISER CONNECTION DETAIL
NTS

NOTES:

1. PROVIDE ONLY SST NIPPLE THROUGH BLIND FLANGE FOR CONNECTIONS OTHER THAN FOR PUMPS (IE, SUMP PUMP DISCHARGE AND LEACHATE RECIRCULATION LINE) AT LANDFILL CPB. PROVIDE SST NIPPLE WITH MALE QUICK-CONNECT COUPLING END THROUGH BLIND FLANGE FOR LEACHATE FORCE MAIN DISCHARGE CONNECTIONS AT EVAP POND CPB.
2. TYPICAL RISER CONNECTIONS FROM PUMP DISCHARGE PIPE TO BLDG PIPING SHALL CONSIST OF QUICK-CONNECT COUPLINGS (FIBER GLASS-FILLED POLYPROPYLENE CONSTRUCTION WITH STAINLESS STEEL RINGS, ARMS & PINS) AND FLEXIBLE HOSE (11906 ROYALFLEX; VINYL NITRILE; BY BOSTON INDUSTRIAL PRODUCTS, OR EQUAL).
3. PROVIDE SNATCH BLOCK FOR FACILITATING RAISING AND LOWERING PUMP ASSEMBLY WITH WINCH. PROVIDE MCKISSICK SNATCH BLOCK "LIGHT CHAMPION" (CROSBY STOCK NO. 109091), OR EQUAL, WITH 3-INCH SHEAVE DIAMETER, SWIVEL HARDWARE, AND SHACKLE RATED FOR 2 METRIC TONS. FABRICATE ANGLE STEEL BRACKET FOR ATTACHING PULLEY SHACKLE TO PIPE FLANGE (WELD L-ANGLE STEEL PERPENDICULAR TO STEEL PIPE FLANGE WITH HOLE TO ACCEPT SHACKLE; BOLT STEEL FLANGE TO BACKING RING).

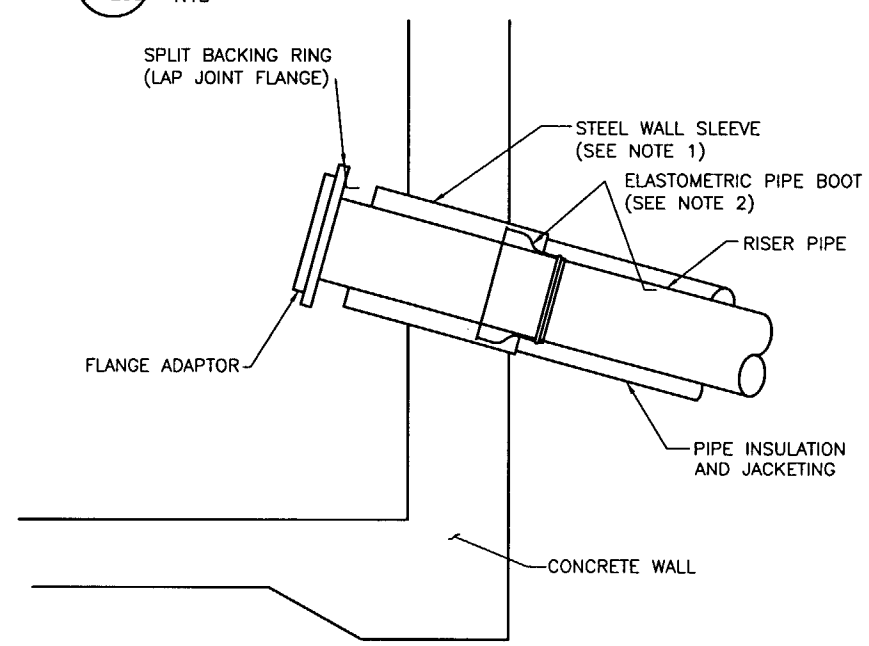

4 P-205 P-206 RISER WALL PENETRATION DETAIL
NTS

NOTES:

1. PROVIDE STEEL PIPE WALL SLEEVE CAST-IN-PLACE. PREPARE SURFACE TO SP10 PRIOR TO COATING WITH 1 COAT EPOXY PRIMER (2.5 MILS DRY FILM THICKNESS (MDFT)) AND 1 COAT POLYURETHANE ENAMEL (3 MDFT). SIZE WALL SLEEVE TO ALLOW PASSAGE OF FLANGE ADAPTER FITTING.
2. PROVIDE FLEXIBLE PIPE-TO-MANHOLE CONNECTOR, KOR-N-SEAL AS MANUFACTURED BY NPC, INC., MILFORD, NH.

PROFESSIONAL ENGINEER REGISTERED 3755 STATE OF IDAHO LAWRENCE M. FETTKETHER 5/8/02

SUBCONTRACT NO.	S01-588058
REQUESTER:	
DESIGN:	BILL FARMER
DRAWN:	JOSHUA PRETS
PROJECT NO.	
SPEC CODE	
FOR REVIEW/APPROVAL SIGNATURES SEE DAR NO.	DAR
EFFECTIVE DATE:	

INEEL Idaho National Engineering & Environmental Laboratory BECHTEL BWXT IDAHO, LLC

CH2MHILL MWH MONTGOMERY WATSON HARZA

INEEL CERCLA DISPOSAL FACILITY (ICDF)

LEACHATE COLLECTION SYSTEM DETAILS

SIZE	CAGE CODE	INDEX CODE NUMBER AREA	TYPE	CL	ORG	DWG-	REV
D		B21	0100	02			0

SCALE: AS SHOWN CPP SHEET P-210