REVISIONS		
REV	DESCRIPTION	EFFECTIVE DATE

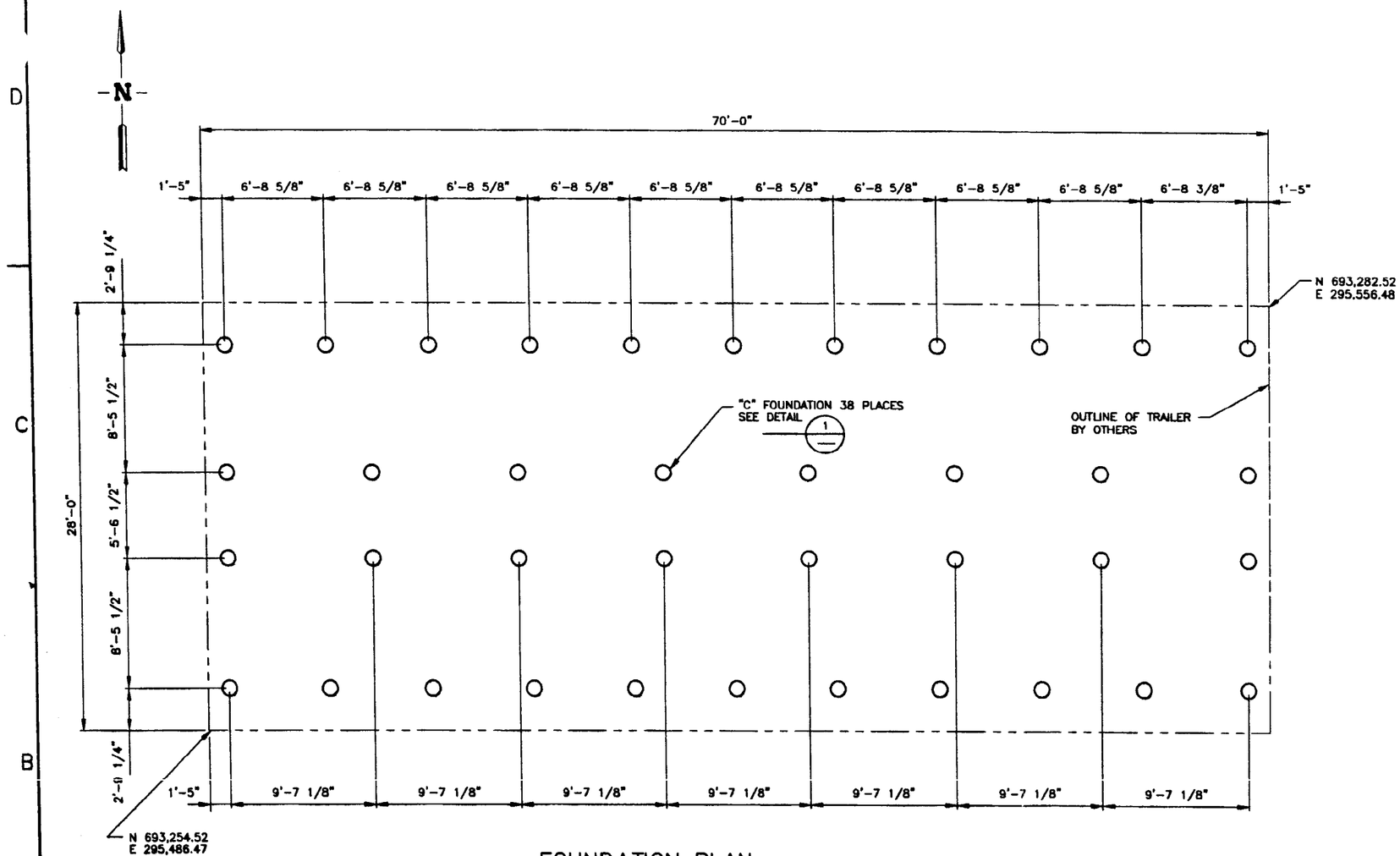

FOUNDATION PLAN

SCALE: 1/4"=1'-0"

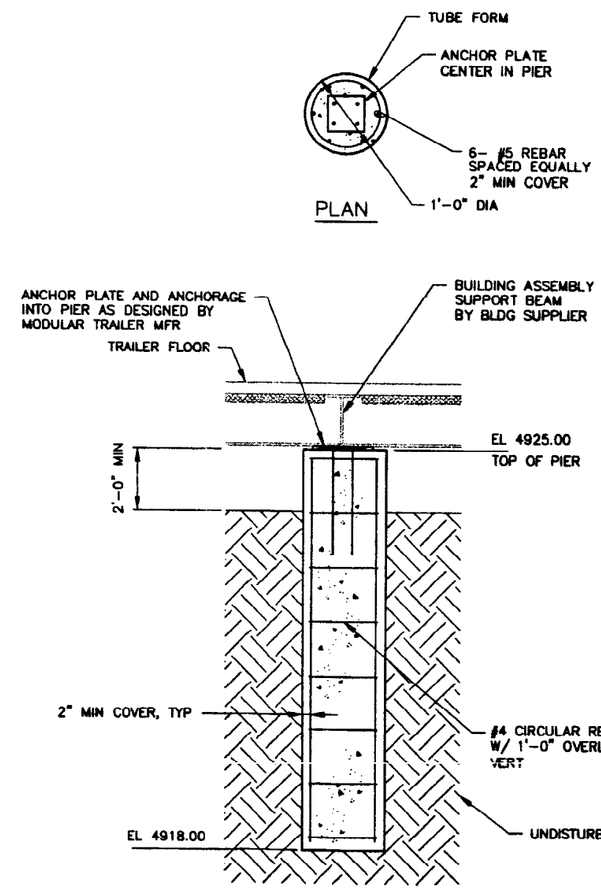

ELEVATION

DETAIL 1

SCALE: 3/4"=1'-0"

FOR DRAWING INDEX SEE DRAWING NO. 520003	SUBCONTRACT NO.	INEEL BATTELLE ENERGY ALLIANCE, LLC
SCALE: 1/4" = 1'-0" / SCALE: 3/4" = 1'-0"	REQUESTER: S.A. DAVIES	INTEC STAGING, STORAGE, SIZING AND TREATMENT FACILITY
	DESIGN: DAVID STEPHENS	
	DRAWN: KEITH BRONSON	ADMINISTRATION BUILDING FOUNDATION PLAN
	PROJECT NO. 020996	
	SPEC CODE	
DESIGN PHASE: AFC	FOR REVIEW/APPROVAL SIGNATURES SEE DAR NO. 88704	SIZE D; CAGE CODE 01MF3; INDEX CODE NUMBER AREA 200, TYPE 1689, Q 62, ORG 090; DWG-520046; REV
SAFETY CATEGORY: LSC	EFFECTIVE DATE: 3/1/03	SCALE: NOTED; SHEET S-1

PROFESSIONAL ENGINEER REGISTERED 7574 STATE OF IDAHO DAVID L. STEPHENS 3/11/03

Layout Name: 520046
Date: 01/29/02 - 6:39 P.M.
AFC
File: 520046.dwg
Path: G:\kbr\SSSTF

REVISIONS		
REV	DESCRIPTION	EFFECTIVE DATE:

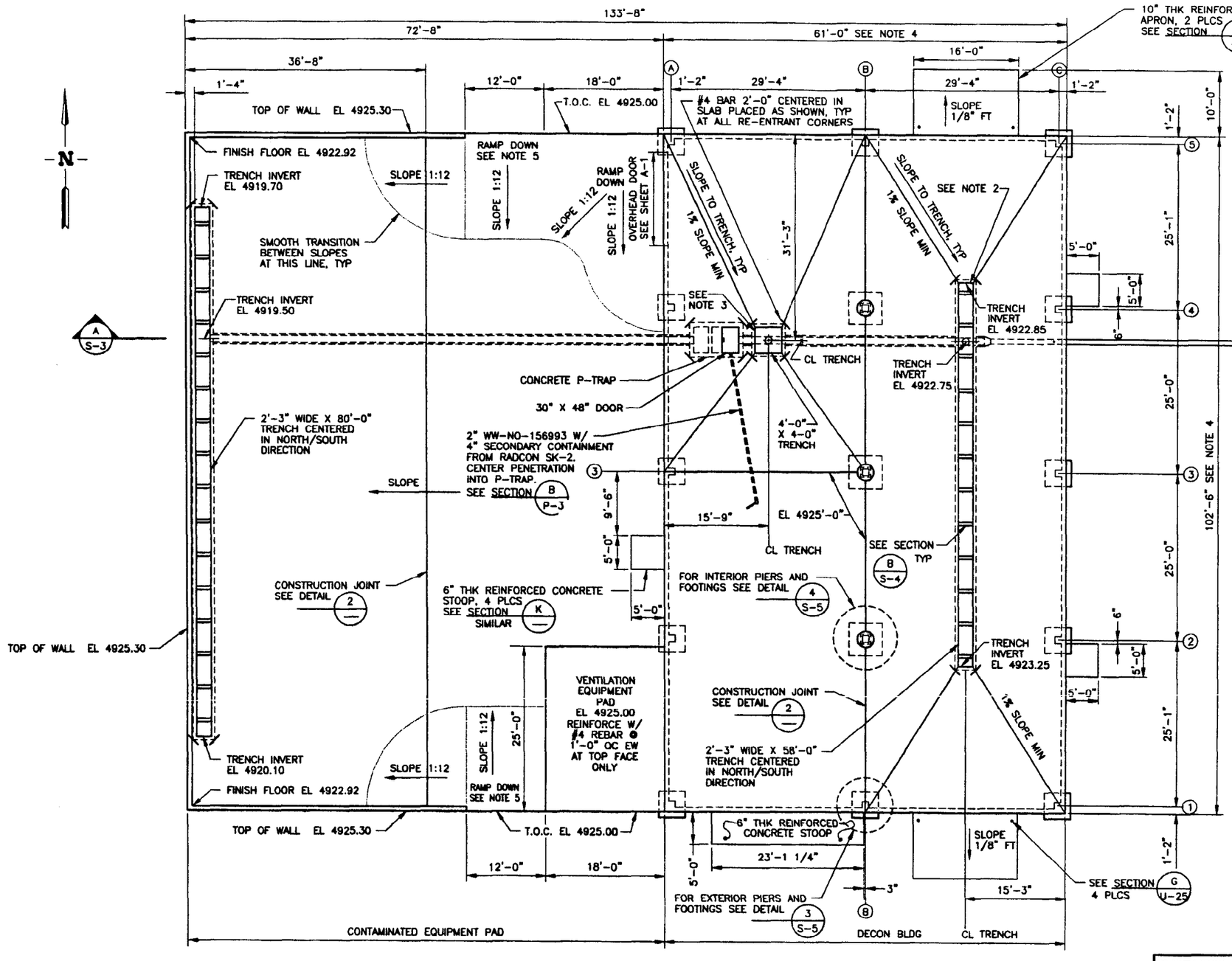

DECON BLDG FOUNDATION AND PAD PLAN

SCALE: 1/8"=1'-0"

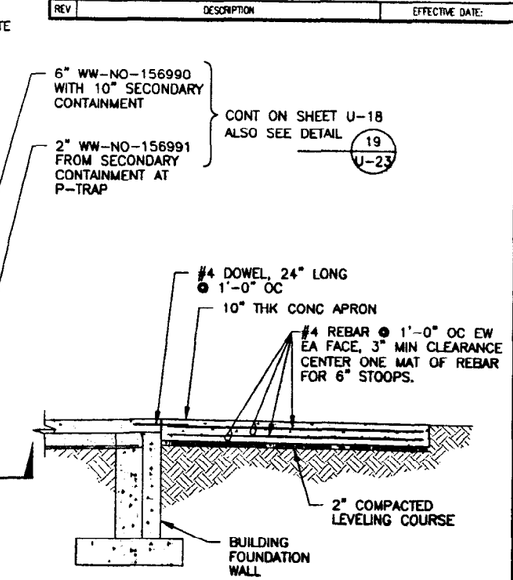

SECTION K
SCALE: 3/8" = 1'-0"

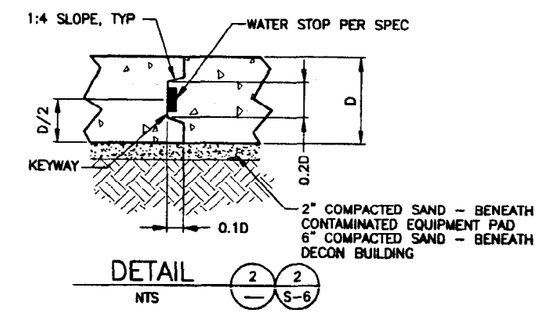

DETAIL 2 S-6
NTS

NOTES

1. UNLESS OTHERWISE SHOWN, ALL CONCRETE FLOOR SLABS ARE TO BE A UNIFORM THICKNESS OF 5".
2. FINISHED FLOOR AT TRENCH 4924.75 ALL AROUND.
3. FINISHED FLOOR AT TRENCH 4924.67.
4. PROVIDE SECONDARY CONTAINMENT LINER SYSTEM UNDER THE FLOOR. SEE PLANS AND SPECS.
5. REINFORCE RAMP PORTIONS WITH TWO LAYERS (2" AND 8" MAX FROM TOP OF SLAB) OF WELDED WIRE FABRIC PER SPEC.

FOR DRAWING INDEX SEE DRAWING NO. 520003	SUBCONTRACT NO.	INEEL
SCALE: 1/8" = 1'-0"	REQUESTER: S.A. DAVIES	INTEC STAGING, STORAGE, SIZING AND TREATMENT FACILITY
SCALE: 3/8" = 1'-0"	DESIGN: DAVID STEPHENS	DECON BLDG FOUNDATION AND PAD PLAN
	DRAWN: KEITH BRONSON	
	PROJECT NO. 020996	
	SPEC CODE	
DESIGN PHASE: AFC	FOR REVIEW/APPROVAL SIGNATURES SEE DAR NO. 88704	SIZE D · CADE CODE 01MF3 · BUILT CODE NUMBER AREA 200 TYPE 1688 Q. 62 DRC 090 · DWG-520047 · REV
SAFETY CATEGORY: LSC	EFFECTIVE DATE: 3/4/2002	SCALE: NOTED · SHEET S-2

PROFESSIONAL ENGINEER REGISTERED 7574 STATE OF IDAHO DAVID L. STEPHENS 3/11/02

File: 520047.dwg Path: G:\Ver\SSSTF 48C Layout Name: 520047 Date: 02/07/02 - 3:52 P.M.

REVISIONS		
REV	DESCRIPTION	EFFECTIVE DATE:

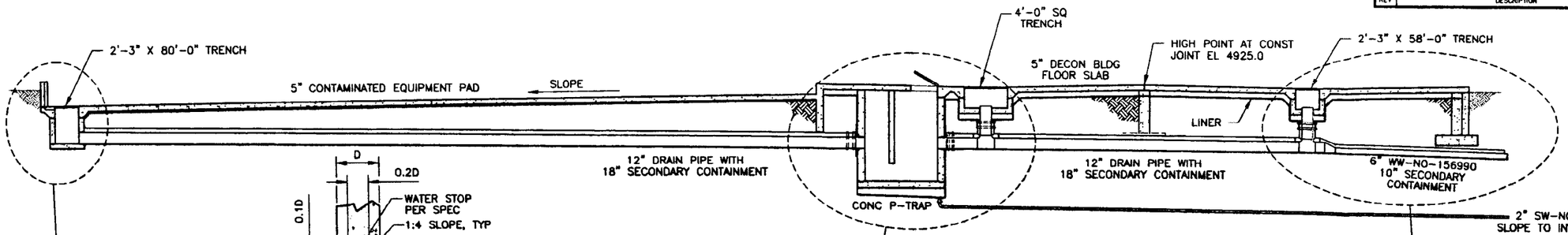

SECTION A S-2
SCALE: 3/16=1'-0"

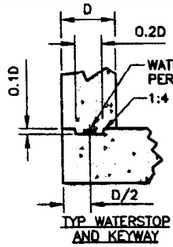

TYP WATERSTOP AND KEYWAY

DETAIL 6 6 S-4
SCALE: 1 1/2"=1'-0"

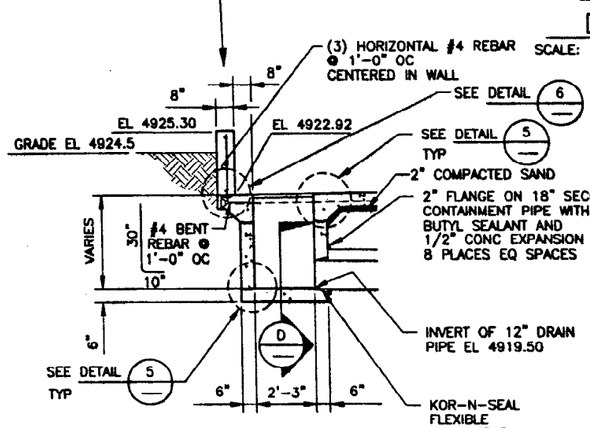

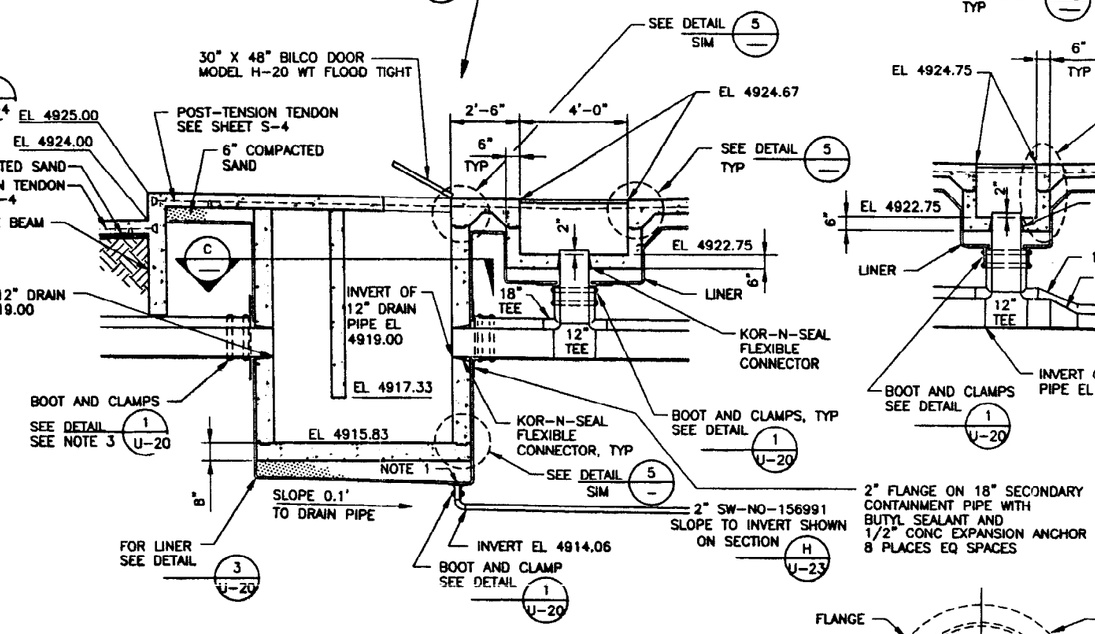

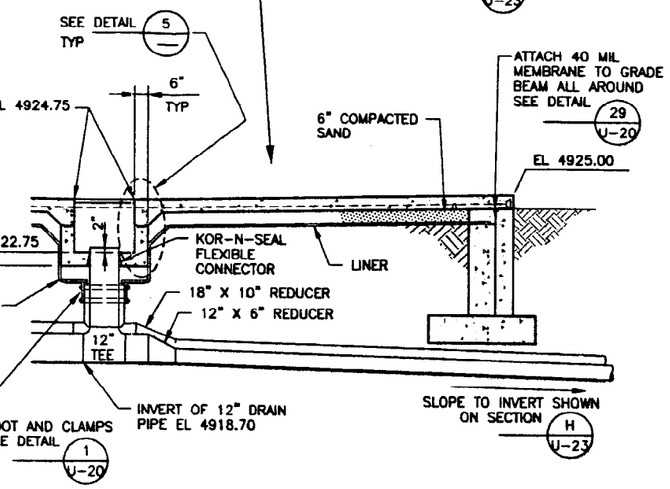

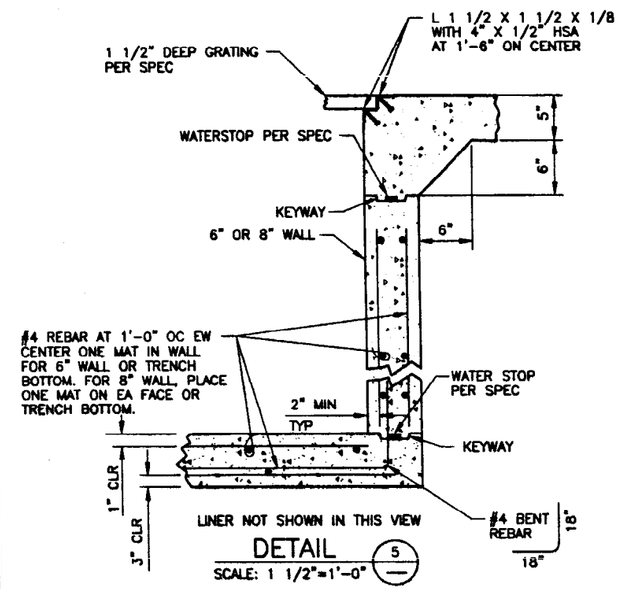

DETAIL 5
SCALE: 1 1/2"=1'-0"

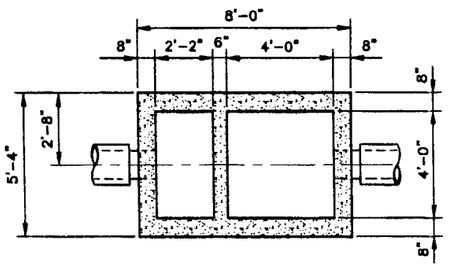

LINER NOT SHOWN IN THIS VIEW

SECTION C
SCALE: 3/8"=1'-0"

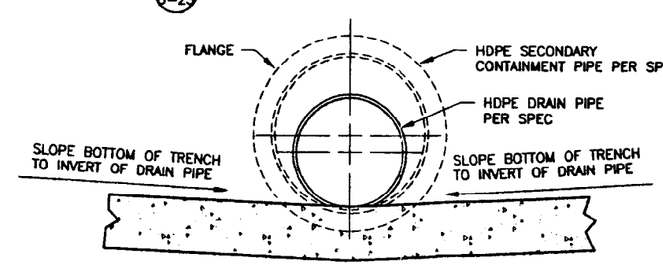

SECTION D
SCALE: 1 1/2"=1'-0"

NOTES

1. PLACE GEOCOMPOSITE PORTION OF LINER OVER END OF PIPE TO PREVENT SAND FROM GOING INTO PIPE.
2. FOR LINER SEE SHEET U-20.
3. PROVIDE DRAINAGE PATH FROM 18" CONTAINMENT PIPE TO LINER

PROFESSIONAL ENGINEER REGISTERED STATE OF IDAHO 14574 3/11/02 DAVID L. STEPHENS

FOR DRAWING INDEX SEE DRAWING NO. 520003	SUBCONTRACT NO.	INEEL BECHTEL BWXT IDAHO, LLC
SCALE: 3/16" = 1'-0" / SCALE: 1 1/2" = 1'-0"	REQUESTER: S.A. DAVIES	INTEC STAGING, STORAGE, SIZING AND TREATMENT FACILITY
	DESIGN: DAVID STEPHENS	SECTIONS AND DETAILS
	DRAWN: KEITH BRONSON	
	PROJECT NO. 020996	
	SPEC CODE	
DESIGN PHASE: AFC	FOR REVIEW/APPROVAL SIGNATURES SEE DAR NO. 88704	SIZE D; CAGE CODE 01MF3; INDEX CODE NUMBER AREA 200, TYPE 1688, 0 62, ORG 090; DWG-520048; REV
SAFETY CATEGORY: LSC	EFFECTIVE DATE: 3/11/2002	SCALE: NOTED; SHEET S-3

File: 520048.dwg Path: G:\dbr\SSSTF Layout Name: 520048 Date: 02/07/02 - 4:14 P.M.

REVISIONS		
REV	DESCRIPTION	EFFECTIVE DATE:

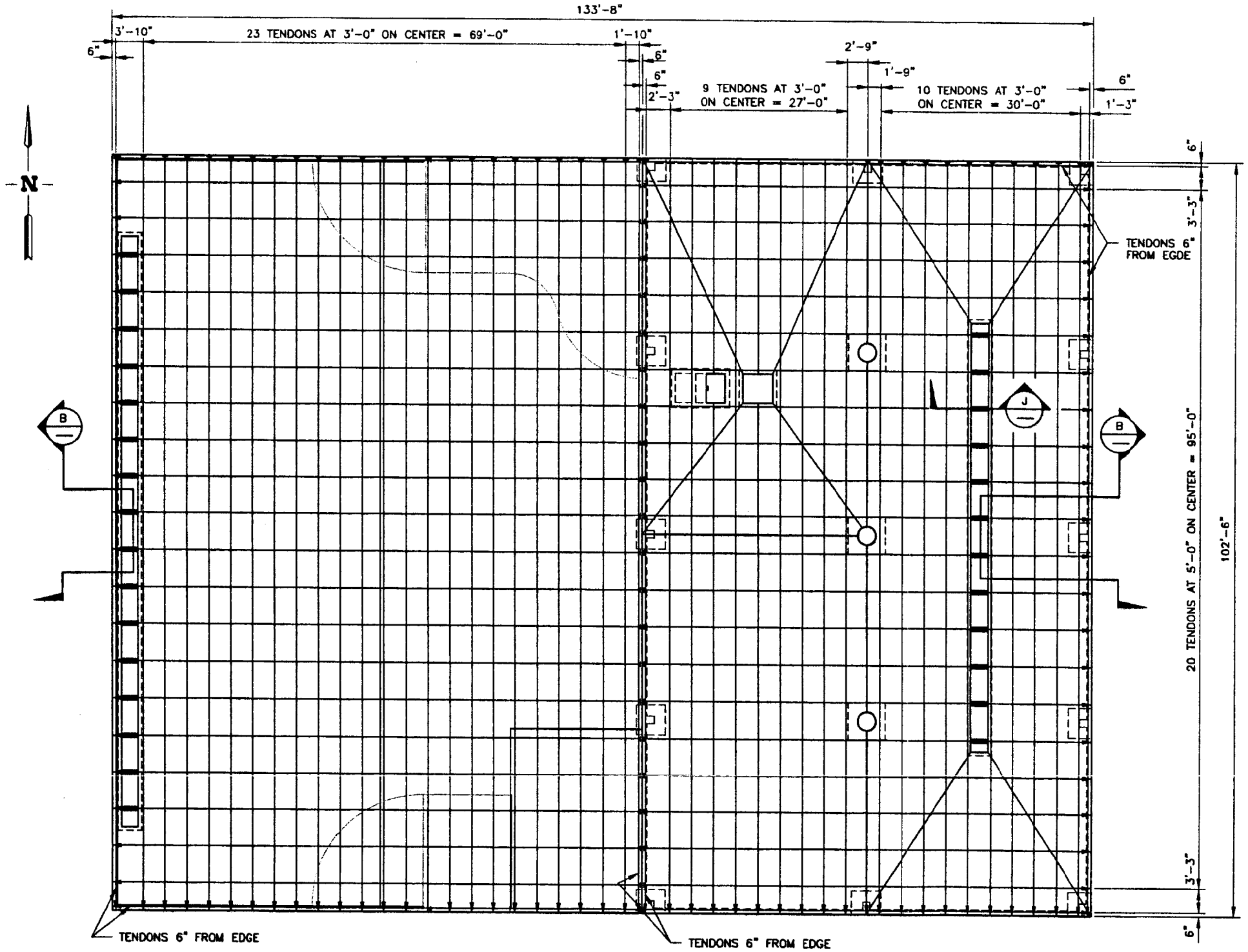

POST-TENSIONING PLAN

SCALE: 1/8"=1'-0"

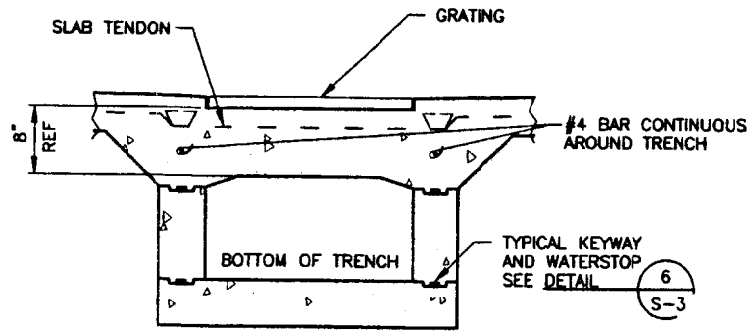

SECTION J

SCALE: 1"=1'-0"

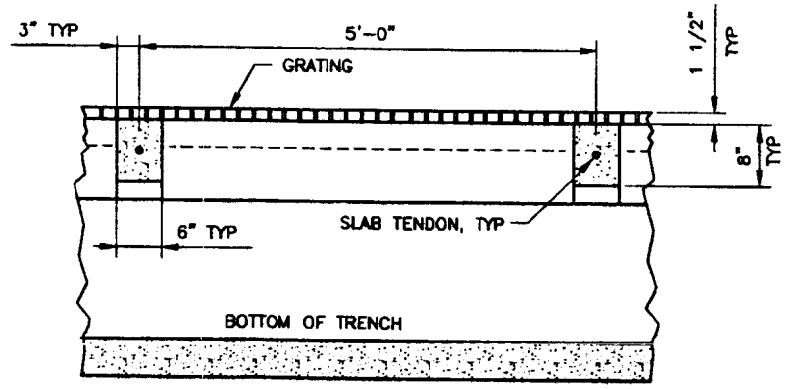

SECTION B B

SCALE: 1"=1'-0"

FOR DRAWING INDEX SEE DRAWING NO. 520003	SUBCONTRACT NO.	INEEL BECHTEL BWXT IDAHO, LLC
1'0 1' 2' 3' 4' 5' 10' 15' SCALE: 1/8" = 1'-0"	REQUESTER: S.A. DAVIES	INTEC STAGING, STORAGE, SIZING AND TREATMENT FACILITY
	DESIGN: DAVID STEPHENS	
	DRAWN: KEITH BRONSON	
1' 0 1' SCALE: 1" = 1'-0"	PROJECT NO. 020996	POST-TENSIONING PLAN AND SECTION
	SPEC CODE	
DESIGN PHASE: AFC	FOR REVIEW/APPROVAL SIGNATURES SEE DAR NO. 88704	SIZE D; CAGE CODE 01MF3; INDEX CODE NUMBER AREA 200, TYPE 1688, GL 62, ORG 090; DWG- 520049; REV
SAFETY CATEGORY: LSC	EFFECTIVE DATE: 2/11/2002	SCALE: NOTED; SHEET S-4

PROFESSIONAL REGISTERED 10574 STATE OF IDAHO DAVID L. STEPHENS 2/11/02

File: 520049.dwg
Path: G:\ver\SSSTF
Layout Name: 520049
Date: 02/13/02 - 06:38 A.M.

REVISIONS		
REV	DESCRIPTION	EFFECTIVE DATE:

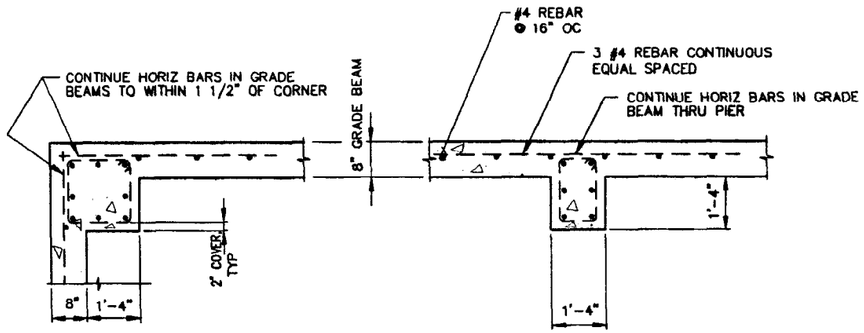

TYPICAL CORNER PIER

TYPICAL INTERMEDIATE PIER

SECTION E

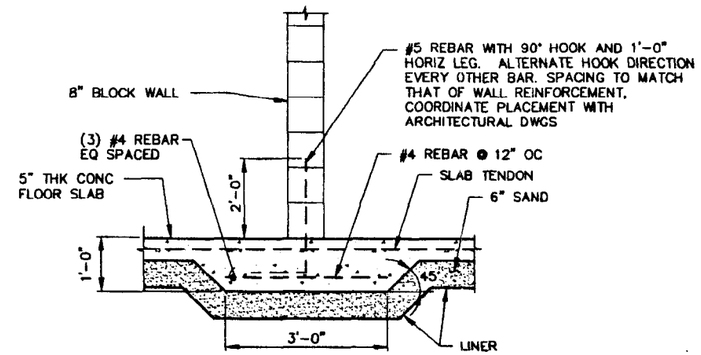

MASONRY WALL SECTION

FOR LOCATION OF MASONRY WALLS SEE SHEET A-1

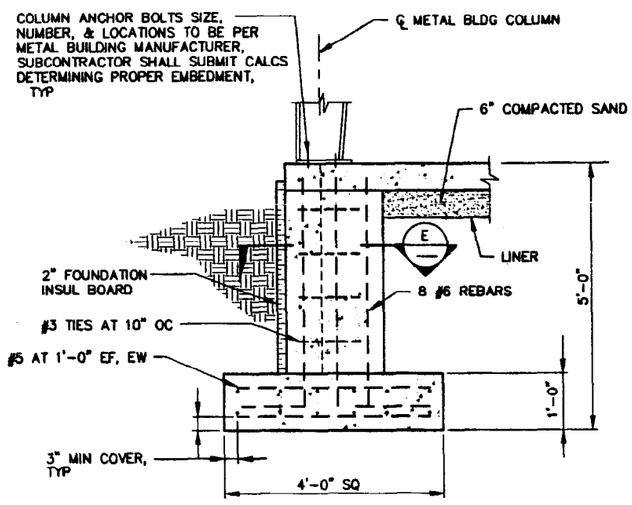

TYPICAL FOR PIERS AT GRADE BEAM

DETAIL 3/S-2

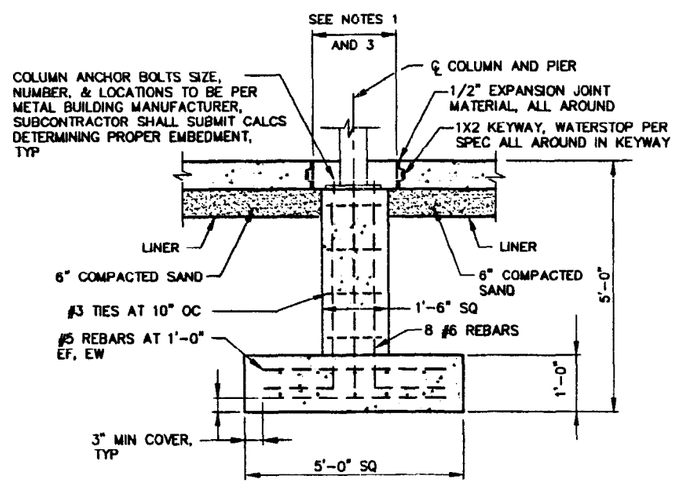

TYPICAL FOR INTERIOR PIERS

DETAIL 4/S-2

NOTES

1. METAL BUILDING PIER AND FOOTING DESIGN IS BASED ON PRELIMINARY METAL BUILDING DESIGN DATA. THE SUBCONTRACTOR SHALL SUBMIT ANTICIPATED BUILDING REACTIONS AND REQUIRED PIER SIZES AS PART OF THE METAL BUILDING VENDOR DATA SUBMITTAL PRIOR TO CONSTRUCTION. BASED UPON THIS SUBMITTAL, MINOR ADJUSTMENTS TO FOOTING AND PIER SIZES MAY BE REQUIRED. IF REQUIRED, THESE CHANGES WILL BE COMMUNICATED TO THE SUBCONTRACTOR AS COMMENTS OR SKETCHES IN THE DISPOSITION OF THE VENDOR DATA SUBMITTAL.
2. THE SUBCONTRACTOR SHALL SUBMIT FOR APPROVAL CALCULATIONS WHICH DETERMINE PROPER EMBEDMENT LENGTH OF METAL BUILDING COLUMN ANCHOR BOLTS.
3. 2'-6" DIA BLOCKOUT IN CONCRETE SLAB FOR ANCHORING BLDG COLUMN. AFTER BOLTS ARE TIGHTENED, BLOCKOUT SHALL BE FILLED IN WITH CONCRETE.

PROFESSIONAL ENGINEER REGISTERED 7574 STATE OF IDAHO DAVID L. STEPHENS 3/11/02

FOR DRAWING INDEX SEE DRAWING NO. 520003	SUBCONTRACT NO.	INEEL LOCKHEED MARTIN IDAHO, LLC
SCALE: 3/4" = 1'-0"	REQUESTER: S.A. DAVIES DESIGN: DAVE STEPHENS DRAWN: KEITH BRONSON PROJECT NO. 020996 SPEC CODE	INTEC STAGING, STORAGE, SIZING AND TREATMENT FACILITY DETAILS AND SECTIONS
DESIGN PHASE: AFC	FOR REVIEW/APPROVAL SIGNATURES SEE DWG NO. 88704	SIZE D · CADD CODE 01MF3 · INDEX CODE NUMBER: AREA 200, TYPE 1688, SQ 62, OBJ 090 · DWG-520050 · REV
SAFETY CATEGORY: LSC	EFFECTIVE DATE: 3/11/2002	SCALE: 3/4"=1'-0" · SHEET S-5

Drawn in Model Space
Date: 02/07/02 - 4:25 P.M.
File: 520050.dwg
Path: G:\kbr\SSSIT

REVISIONS		
REV	DESCRIPTION	EFFECTIVE DATE:

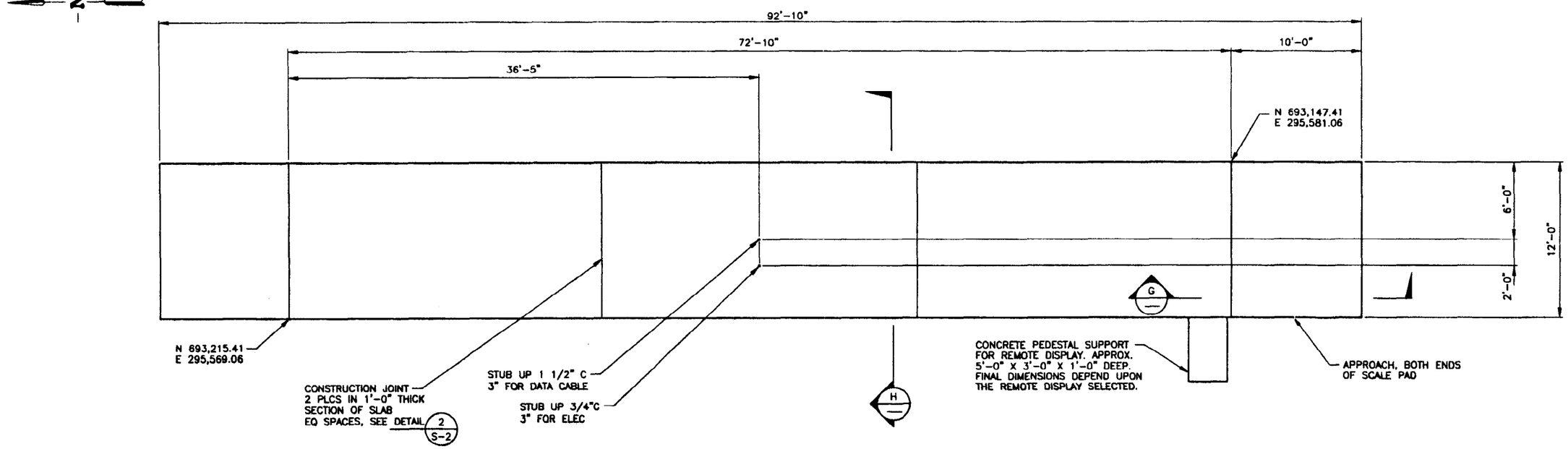

TRUCK SCALE PAD PLAN

SCALE: 1/4"=1'-0"

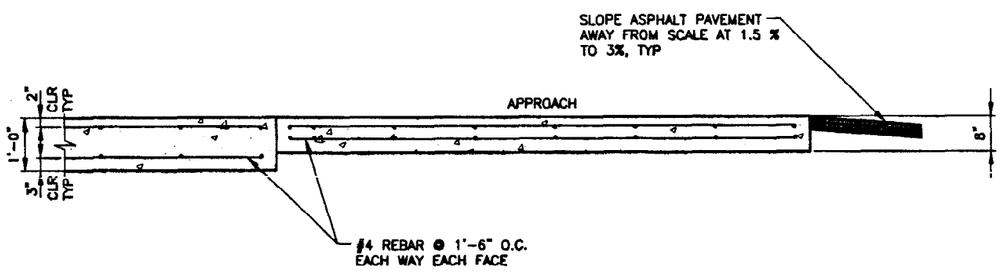

SECTION G/–

SCALE: 3/4"=1'-0"

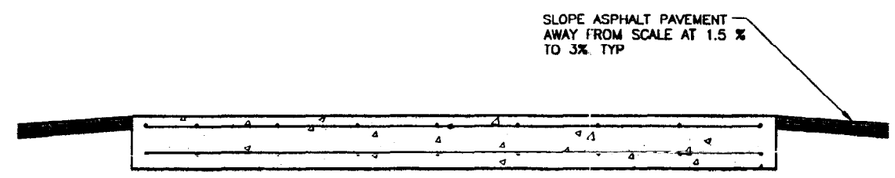

SECTION H/–

SCALE: 3/4"=1'-0"

NOTE

1. FOR TRUCK SCALE PAD LOCATION, SEE SHEET C-2.

FOR DRAWING INDEX SEE DRAWING NO. 520003	SUBCONTRACT NO.	INEEL
SCALE: 1/4" = 1'-0"	REQUESTOR: S.A. DAVIES	INTEC STAGING, STORAGE, SIZING AND TREATMENT FACILITY
SCALE: 3/4" = 1'-0"	DESIGN: DAVE STEPHENS	
	DRAWN: KEITH BRONSON	
	PROJECT NO. 020996	TRUCK SCALE PAD PLAN AND SECTIONS
	SPEC CODE	
DESIGN PHASE: AFC	FOR REVIEW/APPROVAL SIGNATURES SEE DAR NO. 88704	SIZE D · CAGE CODE 01MF3 · INDEX CODE NUMBER AREA 200 TYPE 1795 G 62 DBG 090 · DWG-520051 · REV
SAFETY CATEGORY: LSC	EFFECTIVE DATE: 3/8/2002	SCALE: NOTED · SHEET S-6

PROFESSIONAL ENGINEER REGISTERED 7674 STATE OF IDAHO DAVID L STEPHENS 3/11/02

Layout Name: 520051
Date: 03/07/02 - 4:27 P.M.
File: 520051.dwg
Path: K:\Ver\SSSTF

REVISIONS		
REV	DESCRIPTION	EFFECTIVE DATE:

SERVICE SIZE SCHEDULE		
FIXTURE	COLD	HOT
DF	1/2"	NOT REQUIRED
LAV	1/2"	1/2"
SH	1/2"	1/2"
SK	3/4"	3/4"
UR	3/4"	NOT REQUIRED
WC	3/4"	NOT REQUIRED
WH	1"	1"

SERVICE SIZE SCHEDULE		
FIXTURE	DRAIN	VENT
DF	1 1/2"	1 1/2"
FD	1 1/2"	1 1/2"
LAV	1 1/2"	1 1/2"
SH	2"	2"
SK	1 1/2"	1 1/2"
UR	1 1/2"	1 1/2"
WC	3"	3"

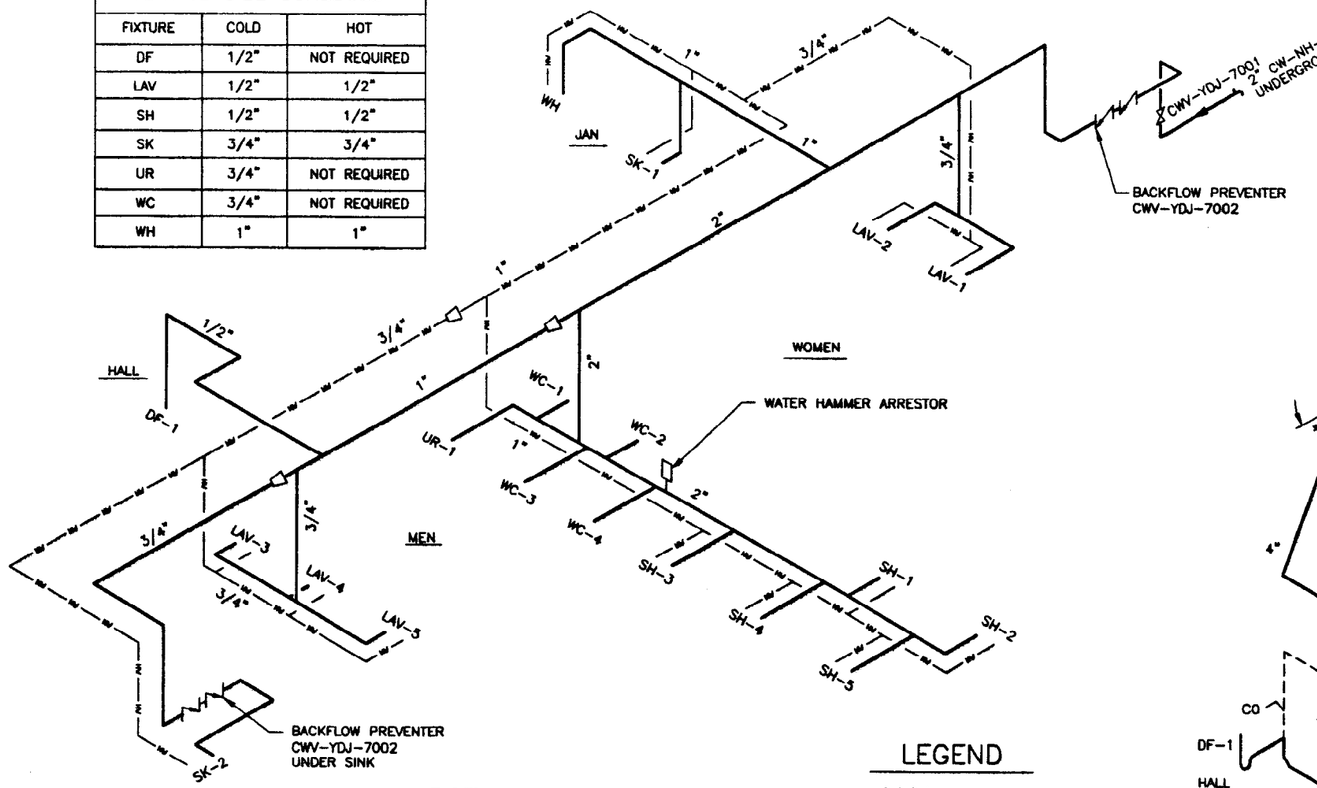

POTABLE WATER DIAGRAM

COLD

HOT

SHUT-OFF VALVES SHALL BE PROVIDED AT EACH FIXTURE

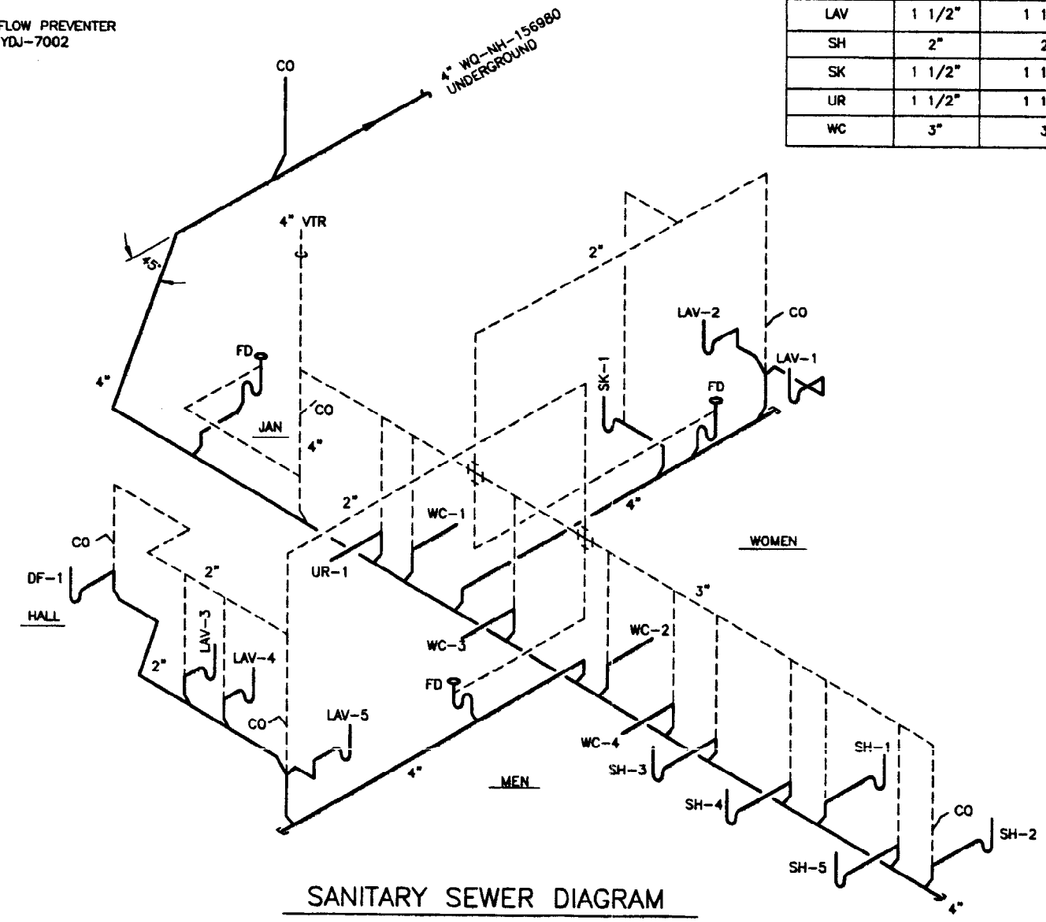

SANITARY SEWER DIAGRAM

DRAIN

VENT

LEGEND

	BACKFLOW PREVENTER
	CAP
	GATE VALVE
	REDUCER
	WATER HAMMER ARRESTOR
BPV	BACKFLOW PREVENTER
CO	CLEANOUT
CW	POTABLE WATER
CWV	POTABLE WATER VALVE
DF	DRINKING FOUNTAIN
FD	FLOOR DRAIN
LAV	LAVATORY
NO	PVC PIPE
RW	RAW WATER
RWV	RAW WATER VALVE
SH	SHOWER
SK	SERVICE SINK
SW	SERVICE WASTE
UR	URINAL
WC	WATER CLOSET
WH	WATER HEATER
WQ	SANITARY SEWER
VTR	VENT THRU ROOF

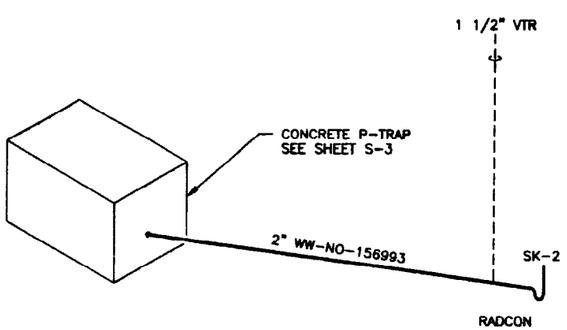

WASTE WATER DIAGRAM

DRAIN

VENT

FOR DRAWING INDEX SEE DRAWING NO. 520003	SUBCONTRACT NO.	INEEL
NO SCALE	REQUESTER: S.A. DAVIES DESIGN: MARK POPE DRAWN: KEITH BRONSON PROJECT NO. 020996 SPEC CODE	INTEC STAGING, STORAGE, SIZING AND TREATMENT FACILITY PLUMBING DIAGRAMS AND LEGEND
DESIGN PHASE: AFC	FOR REVIEW/APPROVAL SIGNATURES SEE DAR NO. 88704	SIZE D; CAGE CODE 01MF3; INDEX CODE NUMBER AREA 200, TYPE 1688, 0, 52, 090; DWG- 520052; REV
SAFETY CATEGORY: LSC	EFFECTIVE DATE: 3/11/2002	SCALE: NONE; SHEET P-1

PROFESSIONAL ENGINEER REGISTERED 0203 STATE OF IDAHO MARK L. POPE

File: 520052.dwg
Path: K:\SSS\TF
Layout Name: 520052
Date: 03/06/02 - 08:25 A.M.

REVISIONS		
REV	DESCRIPTION	EFFECTIVE DATE:

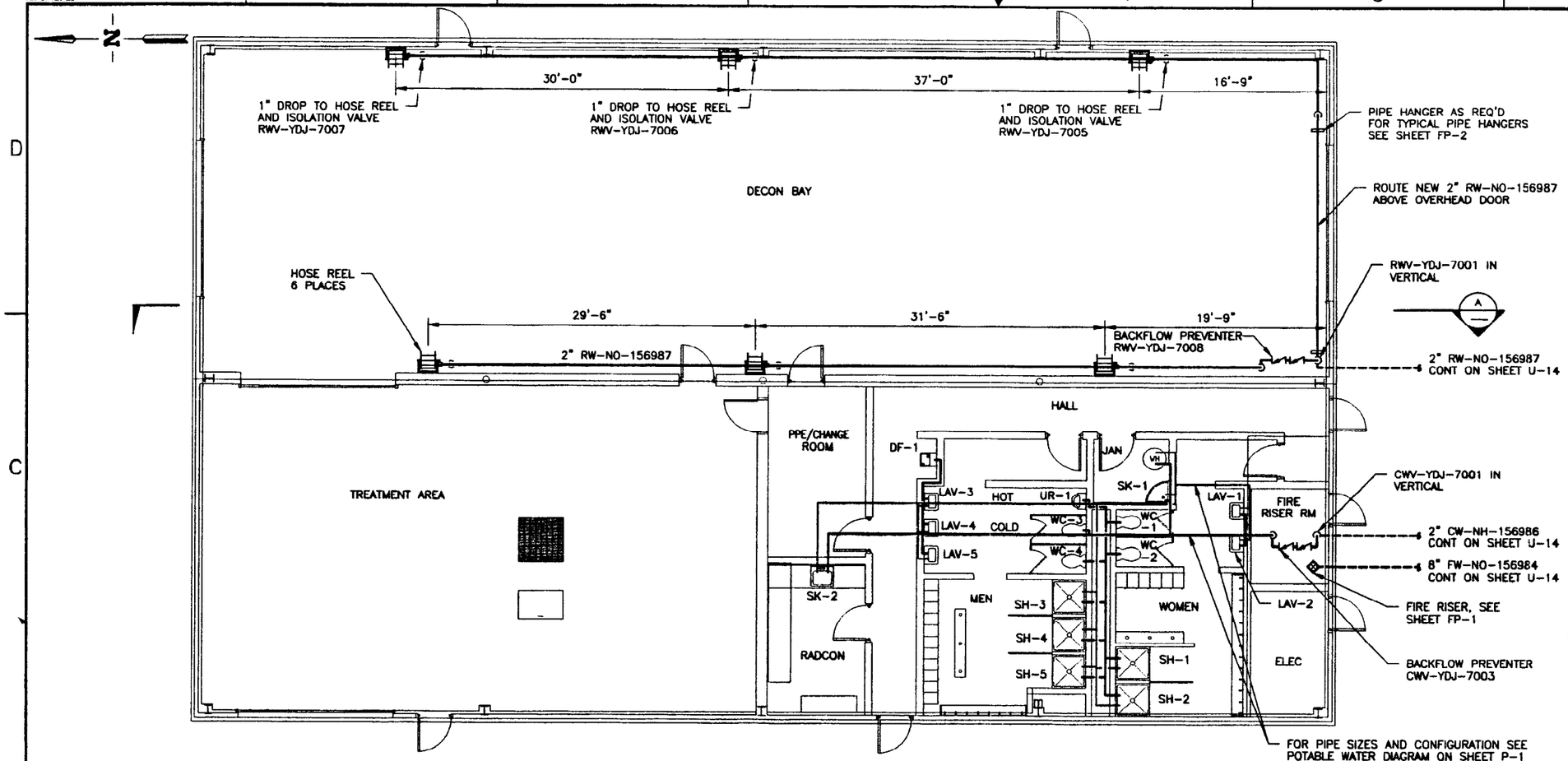

POTABLE AND RAW WATER PIPING PLAN

SCALE: 3/16"=1'-0"

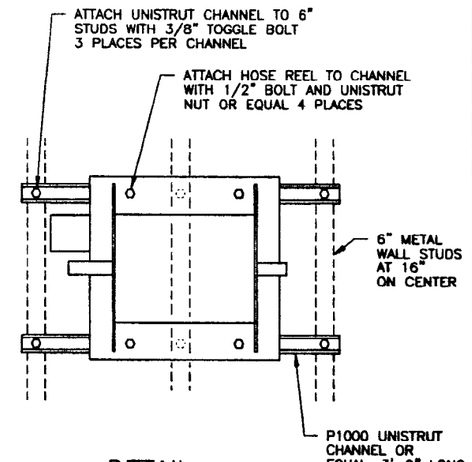

DETAIL 1

SCALE: 1 1/2"=1'-0"

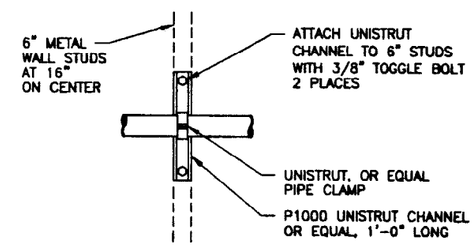

DETAIL 2

SCALE: 1 1/2"=1'-0"

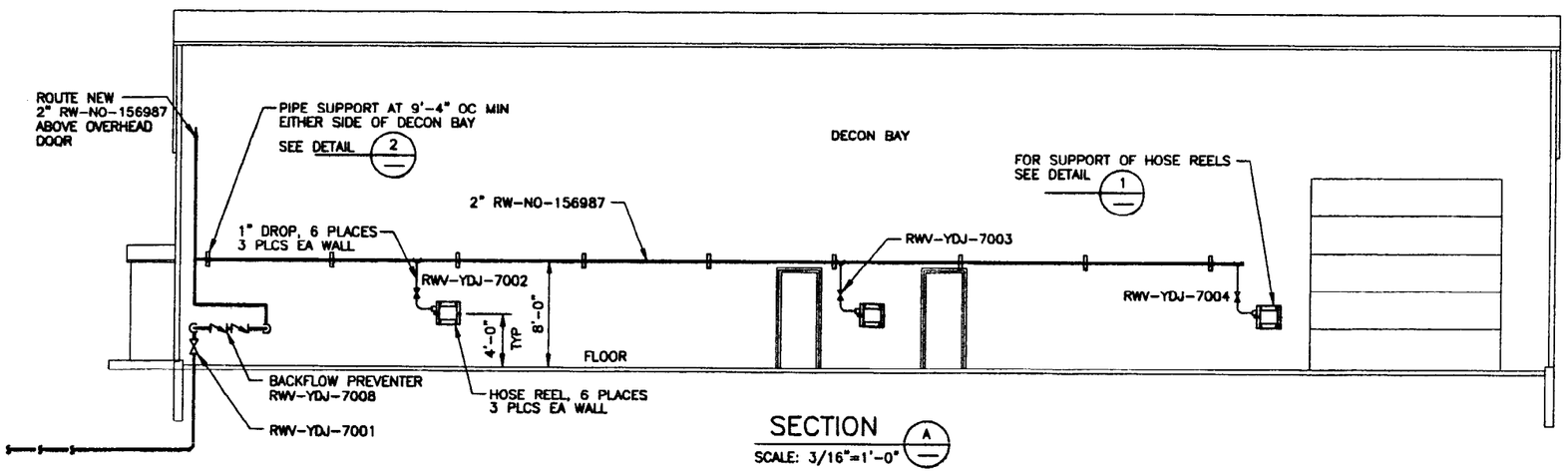

SECTION A

SCALE: 3/16"=1'-0"

XREF DRAWINGS
520112.dwg

FOR DRAWING INDEX SEE DRAWING NO. 520003	SUBCONTRACT NO.	INEEL
SCALE: 3/16" = 1'-0"	REQUESTER: S.A. DAVIES	INTEC STAGING, STORAGE, SIZING AND TREATMENT FACILITY
SCALE: 1 1/2" = 1'-0"	DESIGN: MARK POPE	
	DRAWN: KEITH BRONSON	
	PROJECT NO. 020996	WATER PIPING FLOOR PLAN, SECTION, AND DETAILS
	SPEC CODE	
DESIGN PHASE: AFC	FOR REVIEW/APPROVAL SIGNATURES SEE DAR NO. 88704	SIZE D; CADD CODE 01MF3; INDEX CODE NUMBER AREA 200 TYPE 1688 Q 50 DISC 090; DWG-520053; REV
SAFETY CATEGORY: LSC	EFFECTIVE DATE: 3/11/2003	SCALE: NOTED; SHEET P-2

File: 520053.dwg
Path: K:\SSSTF
Layout Name: 520053
Date: 03/06/02 - 08:48 A.M.

REVISIONS		
REV	DESCRIPTION	EFFECTIVE DATE

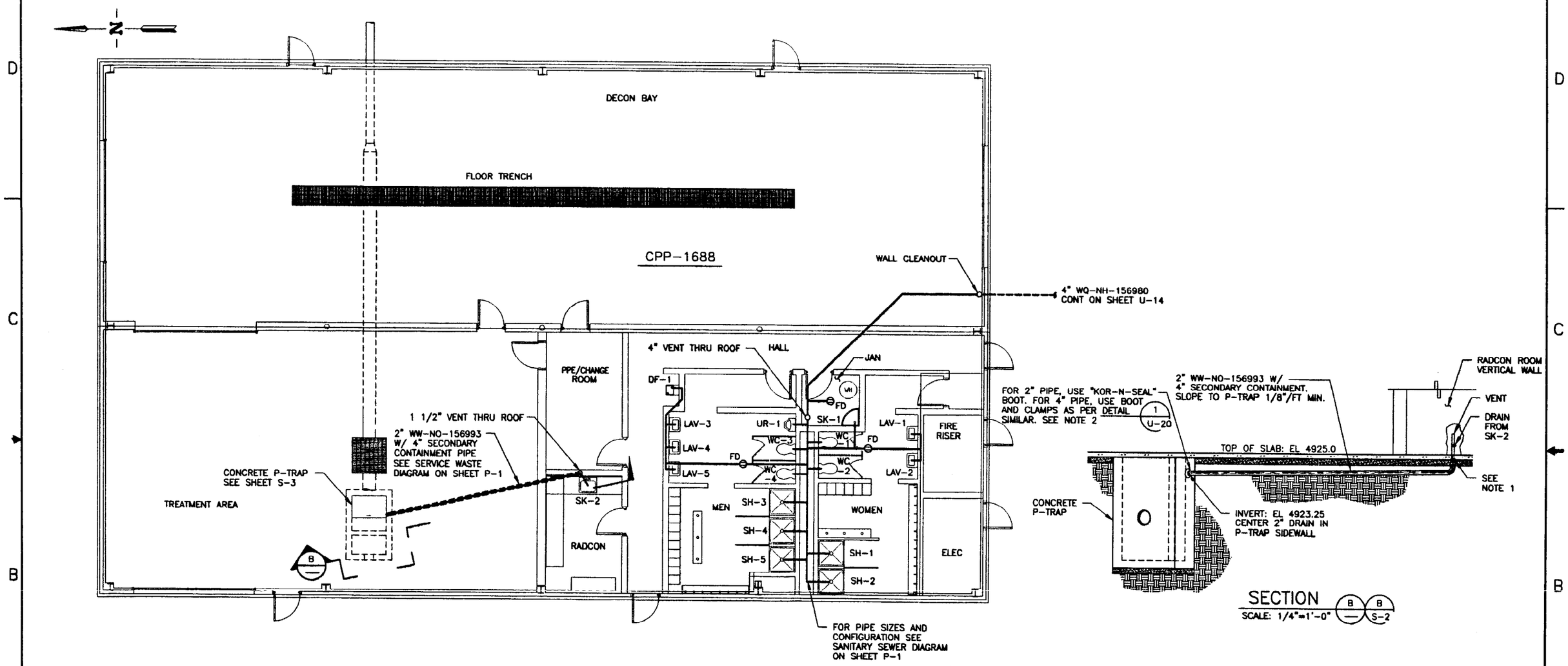

SANITARY SEWER AND WASTE WATER FLOOR PLAN

SCALE: 3/16"=1'-0"

NOTES

1. INSTALL 4" PIPE 1" DEEP INTO CONCRETE FLOOR. FILL ANNULAR SPACE BETWEEN 2" AND 4" PIPE WITH OAKAM FILLER TO PREVENT CONCRETE INTRUSION.
2. PROVIDE DRAINAGE PATH FROM 4" CONTAINMENT PIPE TO LINER AROUND P-TRAP. LINER NOT SHOWN FOR CLARITY.

XREF DRAWINGS
520112.dwg

FOR DRAWING INDEX SEE DRAWING NO. 520003	SUBCONTRACT NO.	INEEL BATTELLE ENERGY ALLIANCE, LLC
SCALE: 3/16" = 1'-0" / SCALE: 1/4" = 1'-0"	REQUESTER: S.A. DAVIES	INTEC STAGING, STORAGE, SIZING AND TREATMENT FACILITY
	DESIGN: MARK POPE	
	DRAWN: KEITH BRONSON	
	PROJECT NO. 020996	SANITARY SEWER AND SERVICE WASTE FLOOR PLAN
	SPEC CODE	
DESIGN PHASE: AFC	FOR REVIEW/APPROVAL SIGNATURES SEE DAR NO. 88704	SIZE D / CADE CODE 01MF3 / INDEX CODE NUMBER AREA 200 TYPE 1688 CL 52 ORIG 090 / DWG-520054 REV
SAFETY CATEGORY: LSC	EFFECTIVE DATE: 3/11/2002	SCALE: NOTED / SHEET P-3

PROFESSIONAL ENGINEER REGISTERED 6265 MARK L. POPE STATE OF IDAHO

File: 520054.dwg Path: G:\Acad\SSSTF
Layout Name: 520054 Date: 02/15/02 - 08:46 A.M.

REVISIONS		
REV	DESCRIPTION	EFFECTIVE DATE:

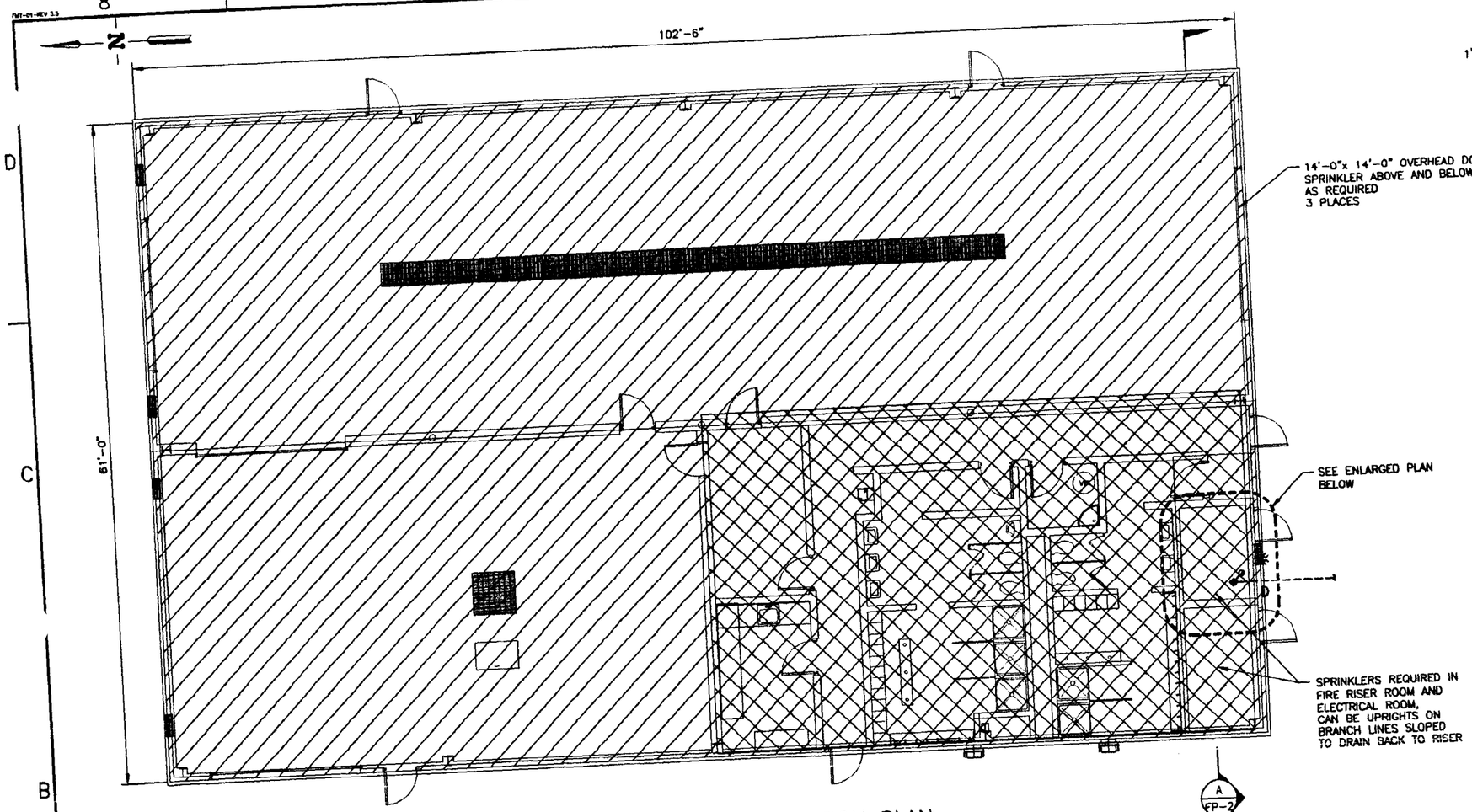

FIRE PROTECTION PLAN

SCALE: 3/16"=1'-0"

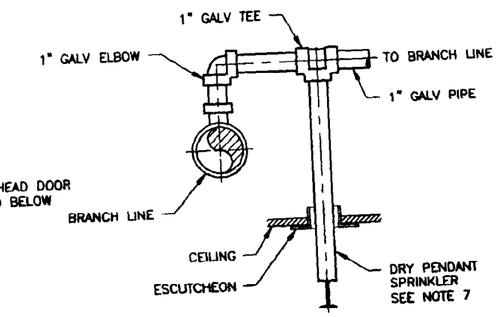

DETAIL 2 — NTS

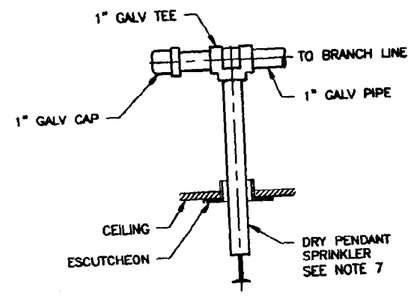

DETAIL 1 — NTS

NOTES

1. ALL DIMENSIONS AND ELEVATIONS ARE TO CL OF PIPE.
2. ALL DIMENSIONS AND ELEVATIONS ARE APPROXIMATE. FIELD ADJUSTMENTS ARE ALLOWED.
3. BUILDING SHALL BE 100% SPRINKLERED.
4. ALL LINES SHALL BE SLOPED TO DRAIN WITH DRIP DRUM TYPE AUXILIARY DRAINS AS REQUIRED BY NFPA 13. SPRINKLER HEADS SHALL BE INSTALLED WITH COMMON DRAIN LINES SO THAT WATER AND CONDENSATE CAN BE DRAINED OFF OF AND AWAY FROM THE HEADS PER NFPA 13.
5. WATER MOTOR ALARM (GONG) SHALL DISCHARGE WATER TO OUTSIDE OF BUILDING.
6. ALL AUXILIARY DRAINS AS REQUIRED FOR DRY SYSTEMS PER NFPA 13 SHALL BE ROUTED TO DRAIN OUTSIDE THE BUILDING. PROVIDE SPLASH BLOCK WHERE NOT PAVED. INSTALL A 45° ELBOW ON THE LINE OUTSIDE THE BLDG TO DIRECT FLOW DOWN TOWARD THE GROUND. PROVIDE CAP ON END OF EACH DRAIN LINE.
7. DRY PENDANT HAS TO EXTEND INTO TEE OR ELBOW TO AVOID TRAPPED WATER.

XREF DRAWINGS
520112

LEGEND

AREA TO BE SPRINKLERED.
DESIGN FOR ORDINARY HAZARD GROUP 2 OCCUPANCY
PER NFPA 13. SEE SPECIFICATIONS.

AREA TO BE SPRINKLERED.
DESIGN FOR ORDINARY HAZARD GROUP 1 OCCUPANCY. SEE SPEC,
BOTH AT BUILDING OVERHEAD, CEILING LEVEL, AND
UNDER DROPPED CEILING USING DRY PENDANT HEADS INSTALLED
PER DETAIL 1 OR 2

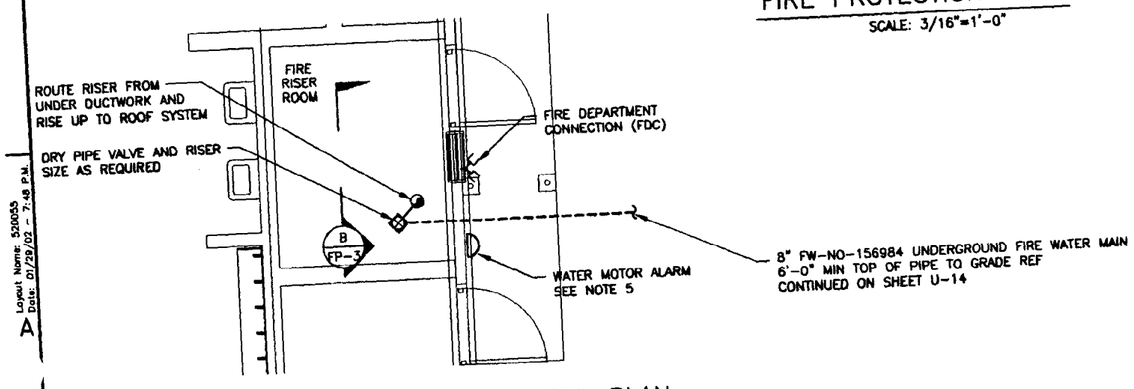

FIRE PROTECTION ENLARGED PLAN

SCALE: 3/8"=1'-0"

PROFESSIONAL ENGINEER REGISTERED 4448 3/7/02 STATE OF IDAHO JOHN D. JENSEN

FOR DRAWING INDEX SEE DRAWING NO. 520003	SUBCONTRACT NO.	INEEL BECHTEL BWXT IDAHO, LLC
SCALE: 3/16" = 1'-0" / SCALE: 3/8" = 1'-0"	REQUESTER: S.A. DAVIES	INTEC STAGING, STORAGE, SIZING AND TREATMENT FACILITY
	DESIGN: LARRY HUNTER	DECON BLDG FIRE PROTECTION PLANS
	DRAWN: KEITH BRONSON	
	PROJECT NO. 020996	
	SPEC CODE	
DESIGN PHASE: AFC	FOR REVIEW/APPROVAL SIGNATURES SEE DAR NO. 88704	SIZE D; CAGE CODE 01MF3; WORK ORDER NUMBER AREA 200, TYPE 1688, Q 52, DWG 090; DWG-520055; REV
SAFETY CATEGORY: LSC	EFFECTIVE DATE: 3/14/2002	SCALE: NOTED; SHEET FP-1

FMT-01-REV 3.3
Layout Name: 520055
Date: 01/29/02 - 7:48 P.M.
File: 520055.dwg
Path: G:\Var\SSTF

REVISIONS		
REV	DESCRIPTION	EFFECTIVE DATE:

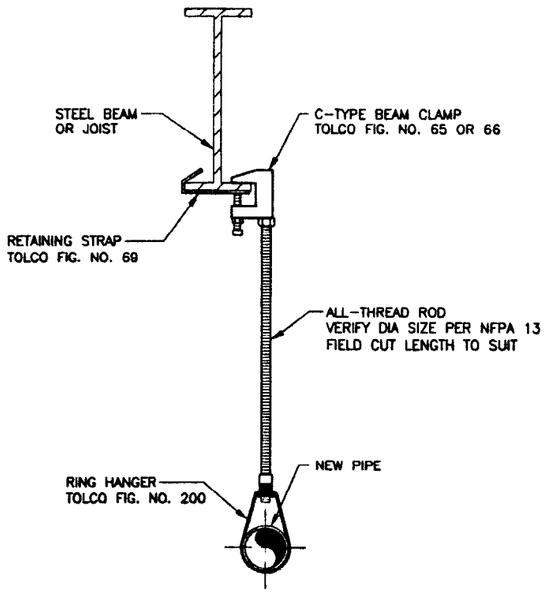

ELEVATION

TYPICAL TYPE-1 HANGER SUPPORT

SCALE: NONE

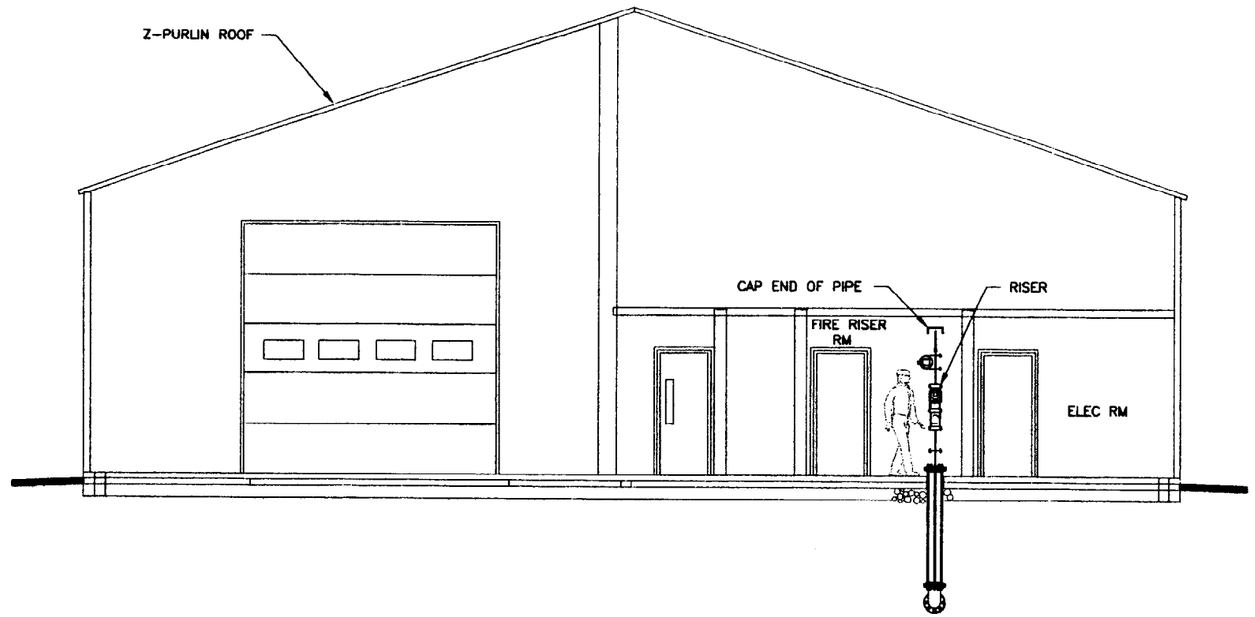

SECTION A FP-1

SCALE: 1/4"=1'-0"

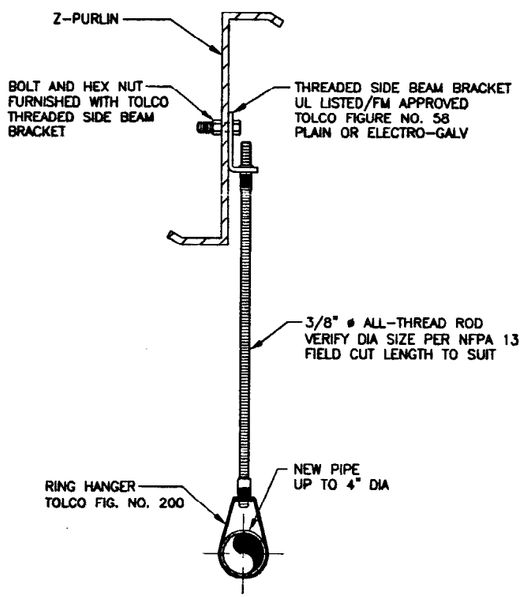

ELEVATION

TYPICAL TYPE-2 HANGER SUPPORT

SCALE: NONE

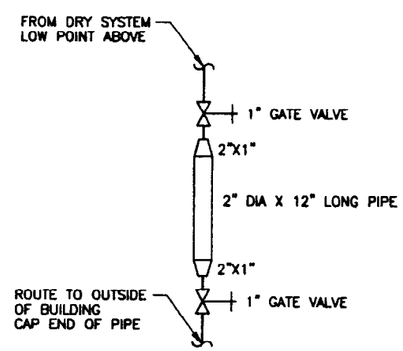

ELEVATION

TYPICAL AUXILIARY DRAIN

SCALE: NONE

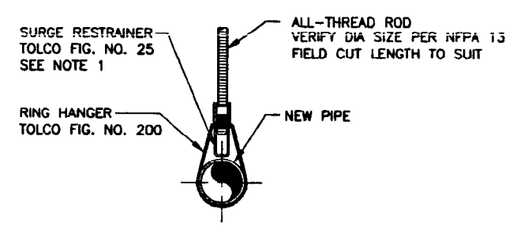

ELEVATION

TYPICAL TYPE-3 HANGER SUPPORT

SCALE: NONE

NOTES

1. INSTALL PIPE HANGER SURGE PROTECTORS AS REQUIRED.
2. FIRE DEPARTMENT CONNECTION SHALL HAVE WALL PLATE AND BREAKAWAY CAPS.
3. INSTALL SEISMIC BRACING PER FM DATA SHEET 2-8.
4. SPLASH BLOCKS ARE NOT REQUIRED FOR DRAINS DISCHARGING ONTO ASPHALT.

PROFESSIONAL ENGINEER REGISTERED 4448 3/7/02 STATE OF IDAHO JOHN D. JENSEN

FOR DRAWING INDEX SEE DRAWING NO. 520003	SUBCONTRACT NO.	INEEL BECHTEL BWXT IDAHO, LLC
SCALE: 1/8" = 1'-0"	REQUESTER: S.A. DAVIES	INTEC STAGING, STORAGE, SIZING AND TREATMENT FACILITY
	DESIGN: LARRY HUNTER	
	DRAWN: KEITH BRONSON	
	PROJECT NO. 020996	SECTION AND DETAILS
	SPEC CODE	
DESIGN PHASE: AFC	FOR REVIEW/APPROVAL SIGNATURES SEE DWR NO. 88704	SIZE D · CAGE CODE 01MF3 · INDEX CODE NUMBER AREA 200 · TYPE 1688 · CO. 52 · ORIG. 090 · DWG-520056 · REV
SAFETY CATEGORY: LSC	EFFECTIVE DATE: 2/21/2002	SCALE: NOTED · SHEET FP-2

File: 520056.dwg Path: Q:\ASP\SSSTF Layout Name: 520056 Date: 01/29/02 - 7:51 P.M.

REVISIONS		
REV	DESCRIPTION	EFFECTIVE DATE:

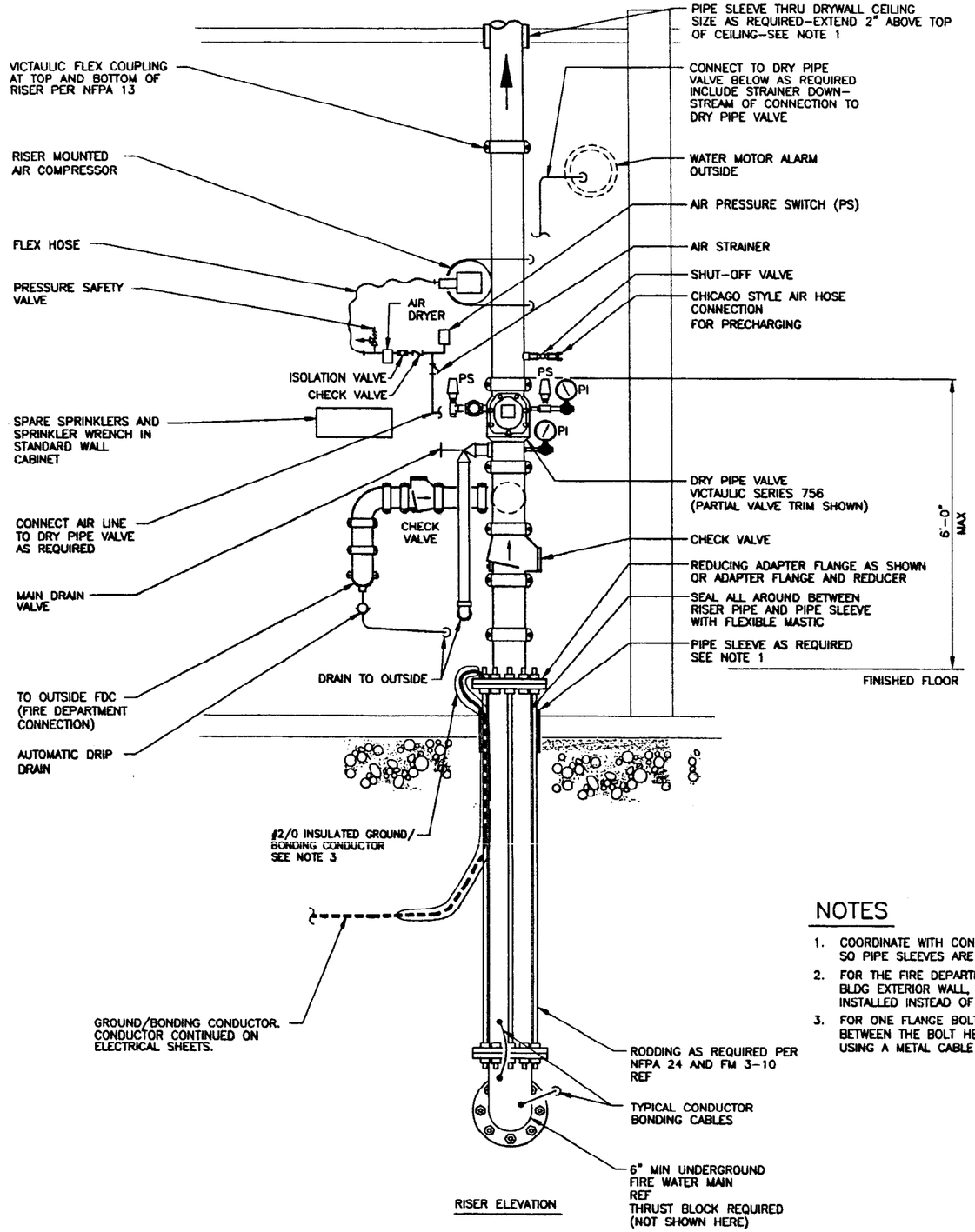

RISER ELEVATION

SECTION

SCALE: 1"=1'-0"

B FP-1

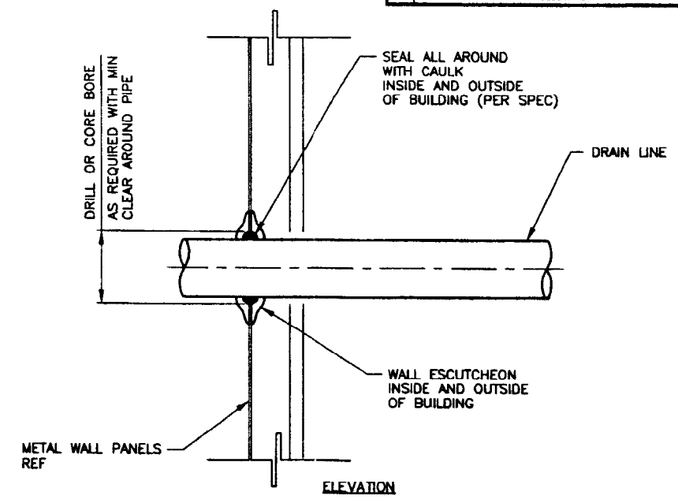

ELEVATION

TYPICAL METAL WALL PENETRATION

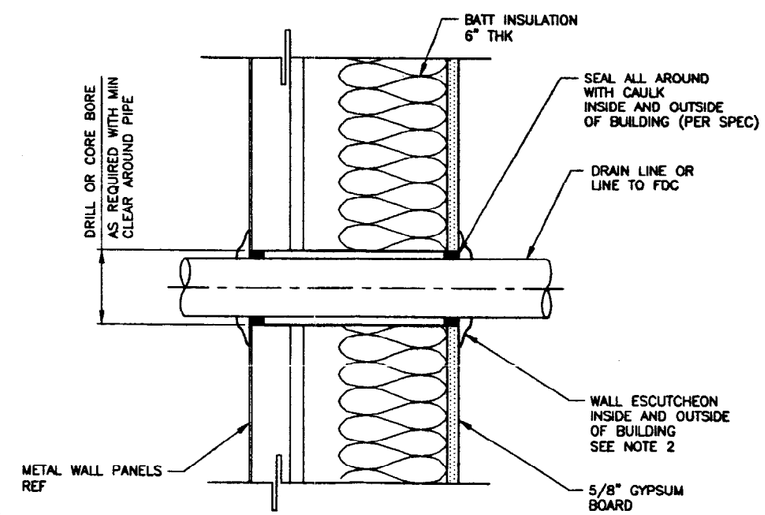

ELEVATION

TYPICAL WALL PENETRATION INSIDE RISER ROOM

NOTES

1. COORDINATE WITH CONCRETE/STRUCTURAL SUBCONTRACTOR SO PIPE SLEEVES ARE CAST IN PLACE IN THE CONCRETE.
2. FOR THE FIRE DEPARTMENT CONNECTION (FDC), OUTSIDE THE BLDG EXTERIOR WALL, AN FDC WALL PLATE SHALL BE INSTALLED INSTEAD OF AN ESCUTCHEON.
3. FOR ONE FLANGE BOLT, CONNECT GROUND/BONDING CONDUCTOR BETWEEN THE BOLT HEX HEAD OR HEX NUT AND STEEL FLANGE USING A METAL CABLE LUG. SEE ELECTRICAL SPECIFICATIONS.

TYPICAL EXTERIOR WALL PIPE PENETRATIONS

SCALE: NONE

PROFESSIONAL ENGINEER REGISTERED 14448 3/7/02 STATE OF IDAHO JOHN D. JENSON

FOR DRAWING INDEX SEE DRAWING NO. 520003	SUBCONTRACT NO.	INEEL BECHTEL BWXT IDAHO, LLC
SCALE: 1" = 1'-0"	REQUESTER: S.A. DAVIES	INTEC STAGING, STORAGE, SIZING AND TREATMENT FACILITY
	DESIGN: LARRY HUNTER	
	DRAWN: KEITH BRONSON	SECTION AND DETAILS
	PROJECT NO. 020996	
	SPEC CODE	
DESIGN PHASE: AFC	FOR REVIEW/APPROVAL SIGNATURES SEE DAR NO. 88704	SIZE D; CAGE CODE 01MF3; INDEX CODE NUMBER AREA 200, TYPE 1688, Q. 52, ORG 090; DWG- 520057; REV
SAFETY CATEGORY: LSC	EFFECTIVE DATE: 3/11/2002	SCALE: NOTED; SHEET FP-3

File: 520057.dwg Path: G:\Var\SSSTF Layout Name: 520057 Date: 01/29/02 - 7:53 P.M.

REVISIONS		
REV	DESCRIPTION	EFFECTIVE DATE:

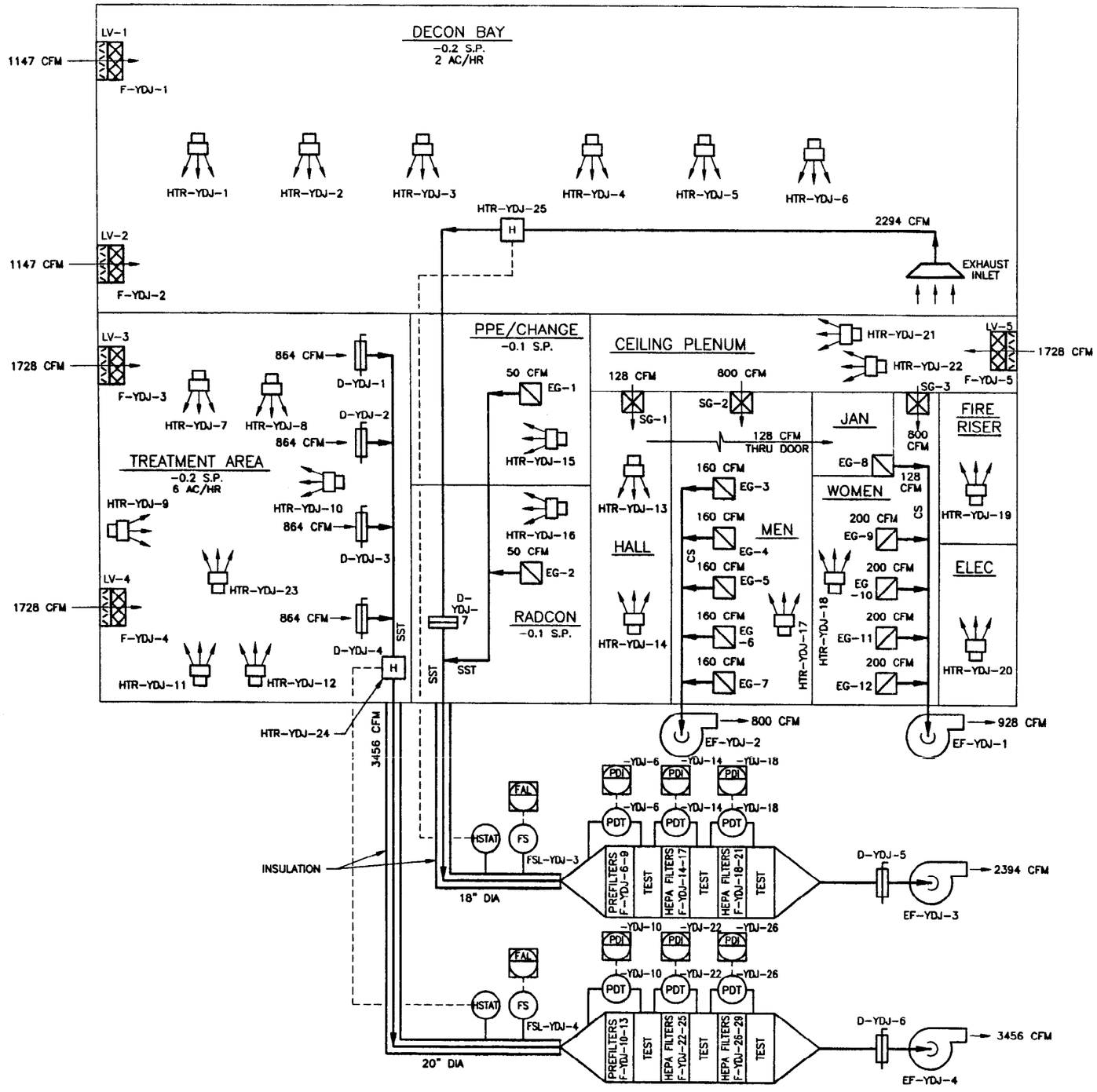

FLOW DIAGRAM

SEQUENCE OF OPERATION

1. RADIANT UNIT HEATERS HTR-YDJ-1 THROUGH HTR-YDJ-12 AND HTR-YDJ-23 SHALL BE THERMOSTATICALLY CONTROLLED TO MAINTAIN TEMPERATURES AT 60° F.
2. RADIANT UNIT HEATERS HTR-YDJ-13 THROUGH HTR-YDJ-18 SHALL HAVE INTEGRAL THERMOSTATS TO MAINTAIN TEMPERATURES AT 72° F.
3. RADIANT UNIT HEATERS HTR-YDJ-19 AND HTR-YDJ-20 SHALL HAVE INTEGRAL THERMOSTATS TO MAINTAIN TEMPERATURES AT 60° F.
4. ELECTRIC RESISTANCE UNIT HEATERS HTR-YDJ-21 AND HTR-YDJ-22 SHALL HAVE INTEGRAL THERMOSTATS TO MAINTAIN CEILING PLENUM AT 72° F.
5. EXHAUST FANS EF-YDJ-1 AND EF-YDJ-2 SHALL OPERATE WHEN LIGHTS ARE ON IN WOMEN'S LOCKER AND MEN'S LOCKER RESPECTIVELY.
6. EXHAUST FANS EF-YDJ-3 AND EF-YDJ-4 SHALL OPERATE CONTINUOUSLY.
7. ELECTRIC DUCT HEATERS HTR-YDJ-24 AND HTR-YDJ-25 SHALL OPERATE UPON HUMIDISTAT SENSING 90% R.H. OR GREATER.

LEGEND

	FAN
	LOCALLY MOUNTED INSTRUMENT
	UNIT HEATER
	LOUVER
	FILTER
	MANUAL DAMPER
	BACKDRAFT DAMPER
	EXHAUST GRILL
	SUPPLY GRILL
H	DUCT HEATER
- - - - - -	ELECTRICAL SIGNAL
AC/HR	AIR CHANGES PER HOUR
AFF	ABOVE FINISHED FLOOR
CFM	CUBIC FEET PER MINUTE
CS	CARBON STEEL
D	DAMPER
DPI	DIFFERENTIAL PRESSURE INDICATOR
EF	EXHAUST FAN
EG	EXHAUST GRILL
F	FILTER
FI	FLOW INDICATOR
HP	HORSEPOWER
HTR	ELECTRIC UNIT HEATER
HSTAT	HUMIDISTAT
LV	LOUVER
SG	SUPPLY GRILL
SP	STATIC PRESSURE
SST	STAINLESS STEEL
W.G.	WATER GAUGE
YDJ	YDJ AREA AT INTEC

PROFESSIONAL ENGINEER REGISTERED 6203 STATE OF IDAHO MARK L. POPE

FOR DRAWING INDEX SEE DRAWING NO. 520003	SUBCONTRACT NO.	INEEL LOCKHEED MARTIN IDAHO, LLC
NO SCALE	REQUESTER: S.A. DAVIES DESIGN: MARK POPE DRAWN: KEITH BRONSON PROJECT NO. 020996 SPEC CODE	INTEC STAGING, STORAGE, SIZING AND TREATMENT FACILITY DECON BLDG H & V FLOW DIAGRAM
DESIGN PHASE: AFC	FOR REVIEW/APPROVAL SIGNATURES SEE DAR NO. 88704	SIZE D · CAGE CODE 01MF3 · INDEX CODE NUMBER AREA 200 TYPE 1688 SEQ 20 DISC 090 · DWG-520058 · REV
SAFETY CATEGORY: LSC	EFFECTIVE DATE: 3/8/2002	SCALE: NONE · SHEET HV-1

File: 520058.dwg Path: G:\vdr\SSSTF Layout Name: 520058 Date: 01/31/02 - 12:55 P.M.

REVISIONS		
REV	DESCRIPTION	EFFECTIVE DATE:

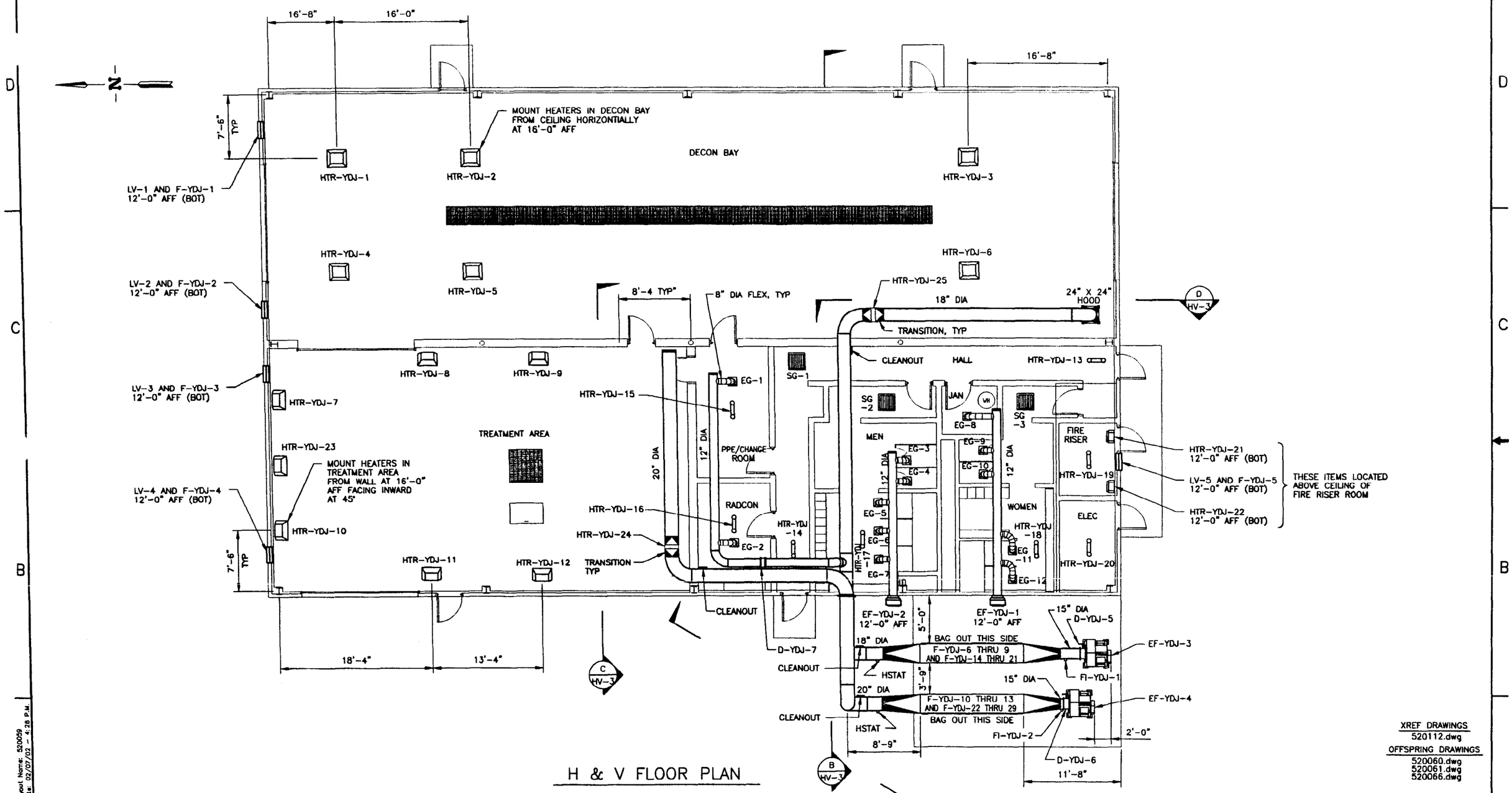

H & V FLOOR PLAN

XREF DRAWINGS
520112.dwg

OFFSPRING DRAWINGS
520060.dwg
520061.dwg
520066.dwg

PROFESSIONAL ENGINEER REGISTERED 6203 STATE OF IDAHO MARK L. POPE

FOR DRAWING INDEX SEE DRAWING NO. 520003	SUBCONTRACT NO.	INEEL
SCALE: 3/16" = 1'-0"	REQUESTOR: S.A. DAVIES DESIGN: MARK POPE DRAWN: KEITH BRONSON	INTEC STAGING, STORAGE, SIZING AND TREATMENT FACILITY
	PROJECT NO. 020996	DECON BLDG H & V FLOOR PLAN
	SPEC CODE	
DESIGN PHASE: AFC	FOR REVIEW/APPROVAL SIGNATURES SEE DAR NO. 88704	SIZE D · CAGE CODE 01MF3 · INDEX CODE NUMBER AREA 200 TYPE 1688 CL 20 ORG 090 · DWG-520059 · REV
SAFETY CATEGORY: LSC	EFFECTIVE DATE: 3/11/2002	SCALE: 3/16"=1'-0" · SHEET HV-2

File: 520059.dwg
Path: G:\Kbr\SSSTF
Layout Name: 520059
Date: 02/07/02 - 4:28 P.M.

REVISIONS		
REV	DESCRIPTION	EFFECTIVE DATE:

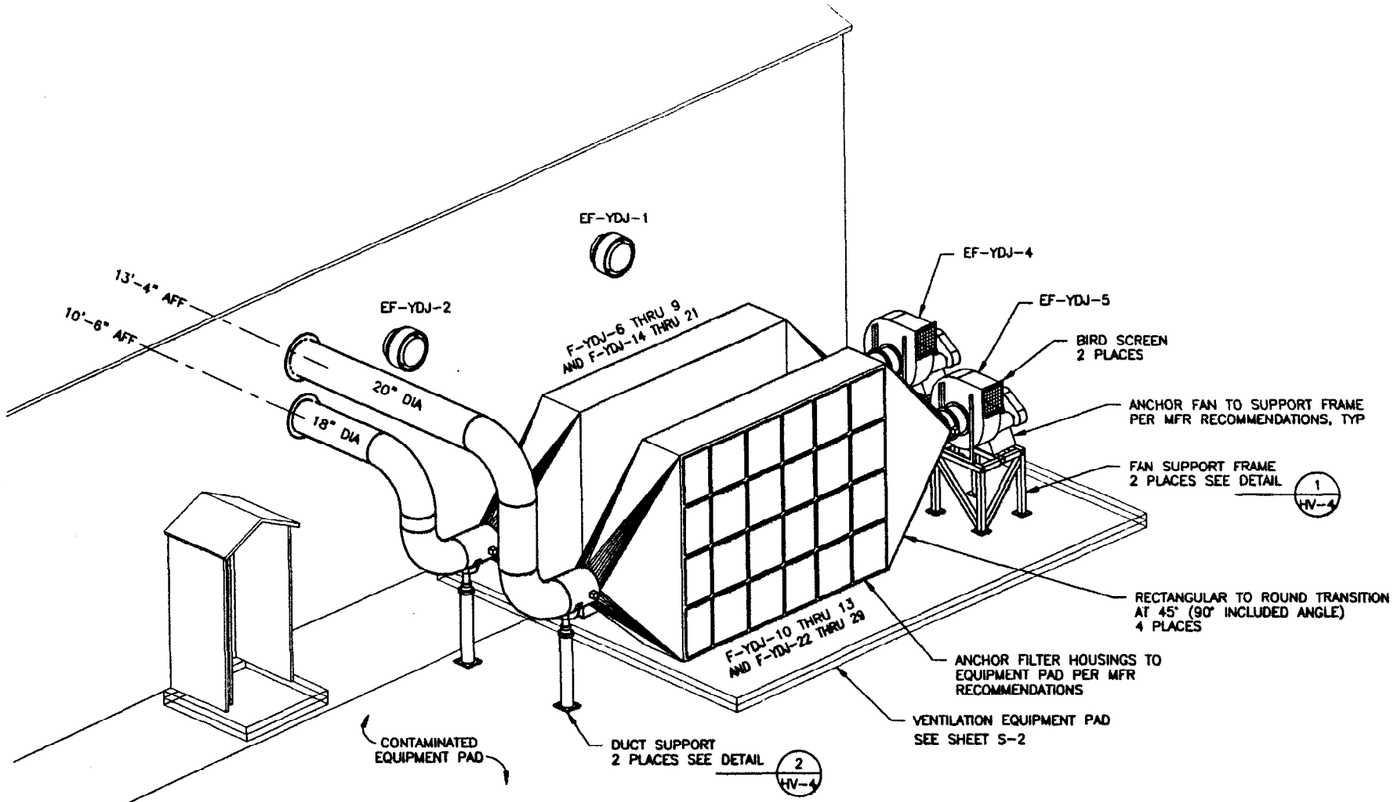

VIEW
NTS
A HV-2

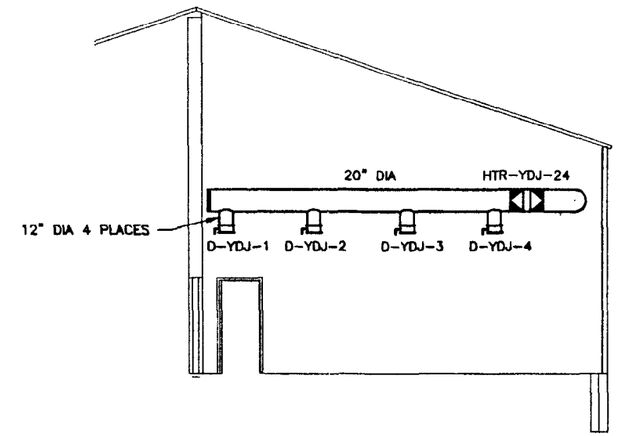

SECTION
SCALE: 3/16"=1'-0"
C HV-2

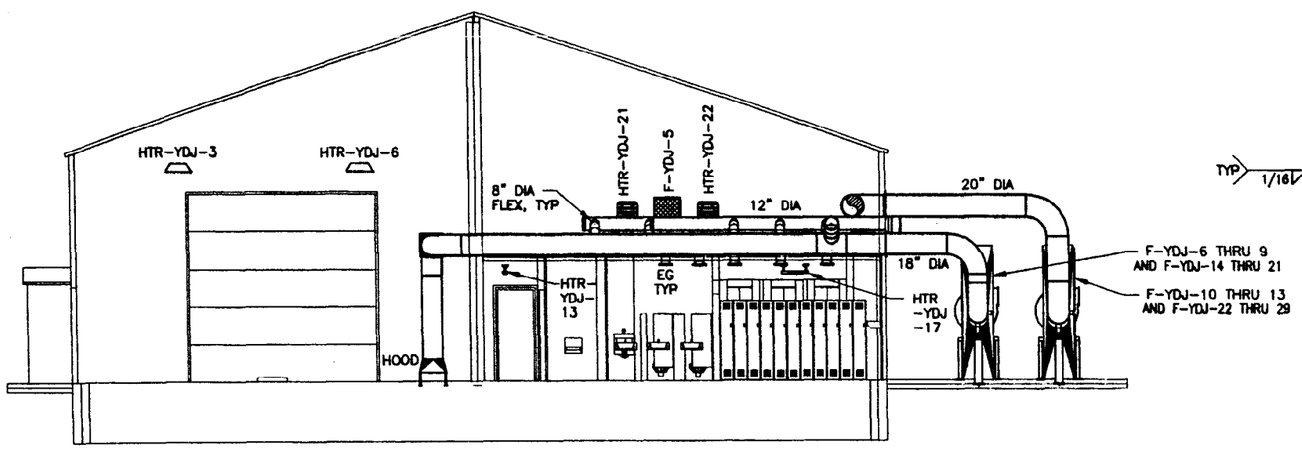

SECTION
SCALE: 3/16"=1'-0"
B HV-2

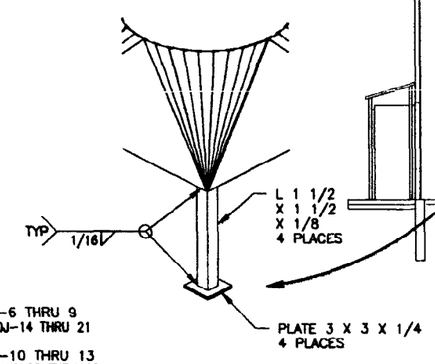

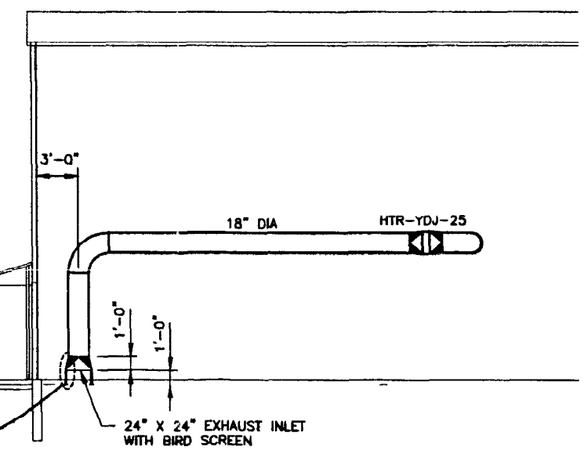

SECTION
SCALE: 3/16"=1'-0"
D HV-2

XREF DRAWINGS
520112.dwg
520059.dwg

FOR DRAWING INDEX SEE DRAWING NO. 520003	SUBCONTRACT NO.	INEEL BECHTEL BWXT IDAHO, LLC
SCALE: 3/16" = 1'-0"	REQUESTOR: S.A. DAVIES DESIGN: MARK POPE DRAWN: KEITH BRONSON PROJECT NO. 020996 SPEC CODE	INTEC STAGING, STORAGE, SIZING AND TREATMENT FACILITY VIEW AND SECTIONS
DESIGN PHASE: AFC SAFETY CATEGORY: LSC	FOR REVIEW/APPROVAL SIGNATURES SEE DAR NO. 88704 EFFECTIVE DATE: 3/4/2003	SIZE D · CAGE CODE 01MF3 · MULT CODE NUMBER AREA 200 TYPE 1688 CL 20 DISC 090 · DWG-520060 · REV SCALE: NOTED · SHEET HV-3

PROFESSIONAL ENGINEER REGISTERED 6203 STATE OF IDAHO MARK I. POPE

Layout Name: 520060
Date: 01/31/02 - 1:02 P.M.
File: 520060.dwg
Path: G:\Mar\SSSTF

REVISIONS		
REV	DESCRIPTION	EFFECTIVE DATE:

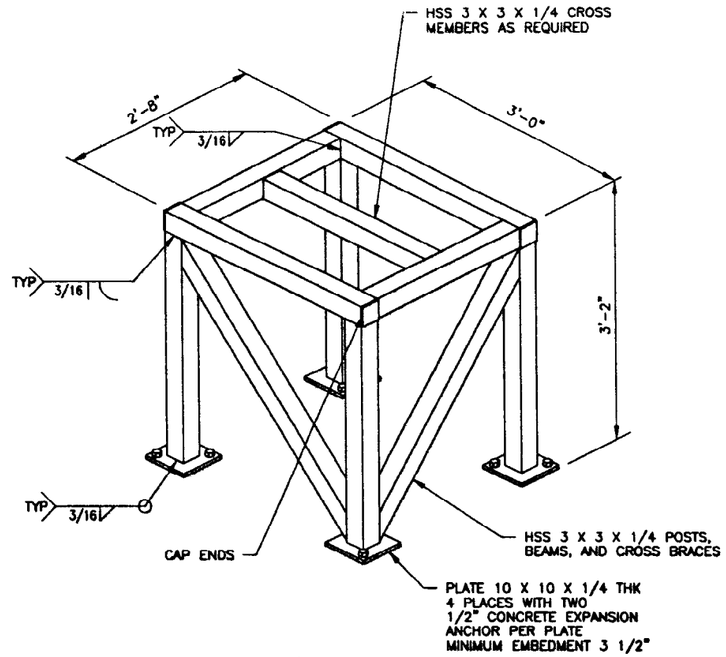

NOTE: DIMENSIONS SHOWN ARE NOMINAL. FIELD DETERMINE EXACT DIMENSIONS.

DETAIL 1 / HV-3

ALL MATERIAL CS
PAINT AND WELD PER SPEC

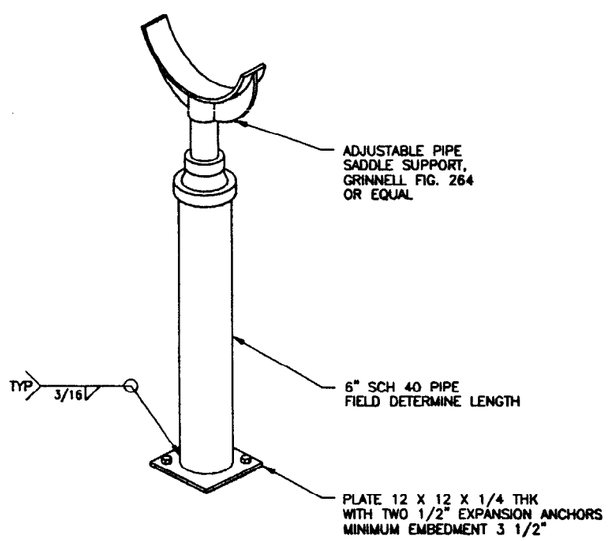

DETAIL 2 / HV-3

ALL MATERIAL CS
PAINT PER SPEC

HEATING AND VENTILATION EQUIPMENT SCHEDULE

EQUIPMENT NUMBER	DESCRIPTION	MAKE AND MODEL	POWER	REMARKS
D-YDJ-1 THRU 4	TREATMENT ROOM EXHAUST BALANCING DAMPER	RUSKIN CRS25 ROUND CONTROL DAMPER	———	MANUAL ACTUATOR, 304 SST CONSTRUCTION
D-YDJ-5 AND 6	EXHAUST FAN ISOLATION DAMPER	RUSKIN CRS25 ROUND CONTROL DAMPER	———	MANUAL ACTUATOR, 304 SST CONSTRUCTION
D-YDJ-7	RADCON PPE/CHANGE RMS BACKDRAFT DAMPER	RUSKIN 12" 12" S2SS HEAVY DUTY BACKDRAFT DAMPER	———	SUBCONTRACTOR TO PROVIDE TRANSITIONS FROM ROUND TO SQUARE DUCT AS REQUIRED
EF-YDJ-1	WOMENS ROOM EXHAUST FAN	GREENHECK CW-098	FRACTIONAL HP, 120V	928 CFM AT 0.25" W.G. COMES ON WITH LIGHTS
EF-YDJ-2	MENS ROOM EXHAUST FAN	GREENHECK CW-098	FRACTIONAL HP, 120V	800CFM AT 0.25" W.G. COMES ON WITH LIGHTS
EF-YDJ-3	DECON AREA EXHAUST FAN	GREENHECK SIZE 15 MODEL P	480 V, 3 PHASE, 5 HP	2294 CFM AT 8" WG CONTINUOUSLY ON
EF-YDJ-4	TREATMENT AREA EXHAUST FAN	GREENHECK SIZE 15 MODEL P	480 V, 3 PHASE, 7.5 HP	3456 CFM AT 8" WG CONTINUOUSLY ON
EG-1 THRU 12	EXHAUST GRILL	TUTTLE AND BAILEY A70D 12" X 12"	———	0° DEFLECTION
F-YDJ-14 THRU 29	EXHAUST AIR HEPA FILTERS	FLANDERS GGF	———	304 SST FRAME, FLUID SEAL
FI-YDJ-1 AND 2	AIR FLOW INDICATOR	AIR MONITOR STATIONARY AIR FLOW METER	———	NEMA 4 ENCLOSURE
FLT-1 THRU 5	INLET AIR ROUGHING FILTERS	AIRPURE PLEAT 24" X 24" SERIES 200 2"	———	———
FLT-6 THRU 13	EXHAUST AIR ROUGHING FILTERS	AIRPURE ECONOCELL II #4404 24" X 24" X 4"	———	———
LV-1 THRU 5	COMBINATION LOUVER/ BACKDRAFT DAMPER	GREENHECK EXTRUDED ALUMINUM GRAVITY STYLE, 4" THICK, 24" X 24"	———	INLET AIR
SG-1 THRU 3	SUPPLY GRILL	TUTTLE AND BAILEY A40-1, 24" X 24"	———	ONE-WAY
HTR-YDJ-1 THRU 12	ELECTRIC RADIANT UNIT HEATER	CHROMOLOX RBC-14-4NC	480 V, 3 PHASE, 13.5 KW	SUSPEND FROM BUILDING ROOF STRUCTURE
HTR-YDJ-13 THRU 20	ELECTRIC RADIANT UNIT HEATER	CHROMOLOX SKR-2083	208V, 1 PHASE, 0.8 KW	CEILING MOUNT
HTR-YDJ-21 AND 22	ELECTRIC RESISTANCE FAN UNIT HEATER	CHROMOLOX KUH-30	480 V, 3 PHASE, 30 KW	WALL MOUNT
HTR-YDJ-23	ELECTRIC RADIANT UNIT HEATER	CHROMOLOX RBC-14-4NC	480 V, 3 PHASE, 13.5 KW	SUSPEND FROM BUILDING ROOF STRUCTURE
HTR-YDJ-24 THRU 25	DUCT HEATER, ELECTRIC RESISTANCE, HUMIDITY CONTROL	DELTA 10 KW FOR 20" X 20" DUCT	480V, 3 PHASE, 10 KW	———
HSTAT				

XREF DRAWINGS
520059.dwg

PROFESSIONAL ENGINEER REGISTERED 6263 STATE OF IDAHO MARK L. POPE

FOR DRAWING INDEX SEE DRAWING NO. 520003	SUBCONTRACT NO.	INEEL BECHTEL BWXT IDAHO, LLC
NO SCALE	REQUESTOR: S.A. DAVIES DESIGN: MARK POPE DRAWN: KEITH BRONSON PROJECT NO. 020996 SPEC CODE	INTEC STAGING, STORAGE, SIZING AND TREATMENT FACILITY DETAILS AND EQUIPMENT SCHEDULE
DESIGN PHASE: AFC SAFETY CATEGORY: LSC	FOR REVIEW/APPROVAL SIGNATURES SEE DAR NO. 88704 EFFECTIVE DATE: 3/8/2002	SIZE D; CAGE CODE 01MF3; INDEX CODE NUMBER AREA 200, TYPE 1688, Q 20, ORG 090; DWG-520061; REV SCALE: NONE; SHEET HV-4

File: 520061.dwg
Path: G:\Abr\SSST
Layout Name: Layout1
Date: 01/29/02 - 8:20 P.M.

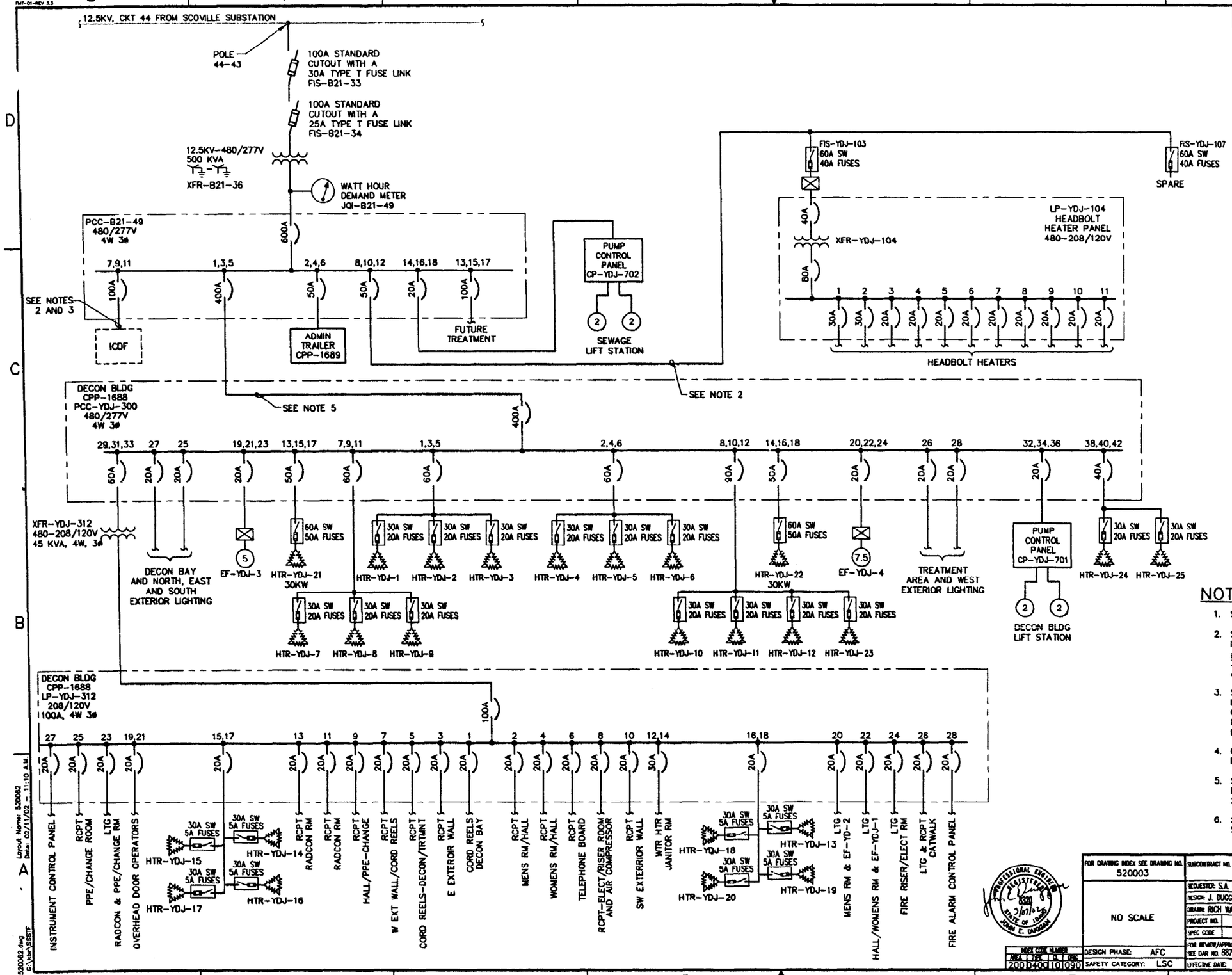

LEGEND

- EXISTING
- NEW
- FUTURE

NOTES

1. SEE SHEET E-8 FOR PANEL SCHEDULES.
2. SPLICE 350 KCMIL CONDUCTORS TO #6 AWG CONDUCTORS IN MANHOLE ADJACENT TO PANEL PCC-B21-49. RUN #6 AWG CONDUCTORS TO CIRCUIT BREAKER. SPLICE 350 KCMIL CONDUCTORS TO #6 CONDUCTORS IN BOX ADJACENT TO HEATER RACK.
3. SPLICE 350 KCMIL CONDUCTORS TO #3 AWG CONDUCTORS IN MANHOLE ADJACENT TO PANEL PCC-B21-49. RUN #3 AWG CONDUCTORS TO CIRCUIT BREAKER. CUP 350 KCMIL CONDUCTORS IN MANHOLE AT ICDF FENCE AND LEAVE 20'-0" SLACK IN MANHOLE FOR FUTURE ICDF CONNECTIONS.
4. UNIT HEATERS HTR-YDJ-1 THROUGH HTR-YDJ-12 AND HTR-YDJ-23 ARE 13.5KW.
5. SPLICE 350 KCMIL CONDUCTORS TO 250 KCMIL CONDUCTORS IN MANHOLE ADJACENT TO PANEL PCC-B21-49. RUN 250 KCMIL CONDUCTORS TO CIRCUIT BREAKER.
6. SEE TABLE ON SHEET E-5 FOR UNIT HEATER DISCONNECT SWITCH EQUIPMENT NUMBERS.

REV	DESCRIPTION	EFFECTIVE DATE:

FOR DRAWING INDEX SEE DRAWING NO. 520003	SUBCONTRACT NO.
NO SCALE	REQUESTER: S.A. DAVIES DESIGN: J. DUGGAN DRAWN: RICH WATSON PROJECT NO. 020996 SPEC CODE
DESIGN PHASE: AFC	FOR REVIEW/APPROVAL SIGNATURES SEE DAR NO. 88704
SAFETY CATEGORY: LSC	EFFECTIVE DATE: 3/8/2002

INDEX CODE NUMBER: AREA 200 | TYPE D40 | Q 10 | ORIG 090

INEEL — LOCKHEED MARTIN IDAHO, LLC

INTEC
STAGING, STORAGE, SIZING AND TREATMENT FACILITY

DECON BLDG ONE LINE DIAGRAM

SIZE D | CAGE CODE 01MF3 | INDEX CODE NUMBER: AREA 200 | TYPE 1688 | Q 10 | ORIG 090 | DWG-520062 | REV

SCALE: NONE | SHEET E-1

Layout Name: 520062 Date: 02/11/02 - 11:10 A.M.
File: 520062.dwg Path: G:\ebr\SSSTF

REVISIONS		
REV	DESCRIPTION	EFFECTIVE DATE:

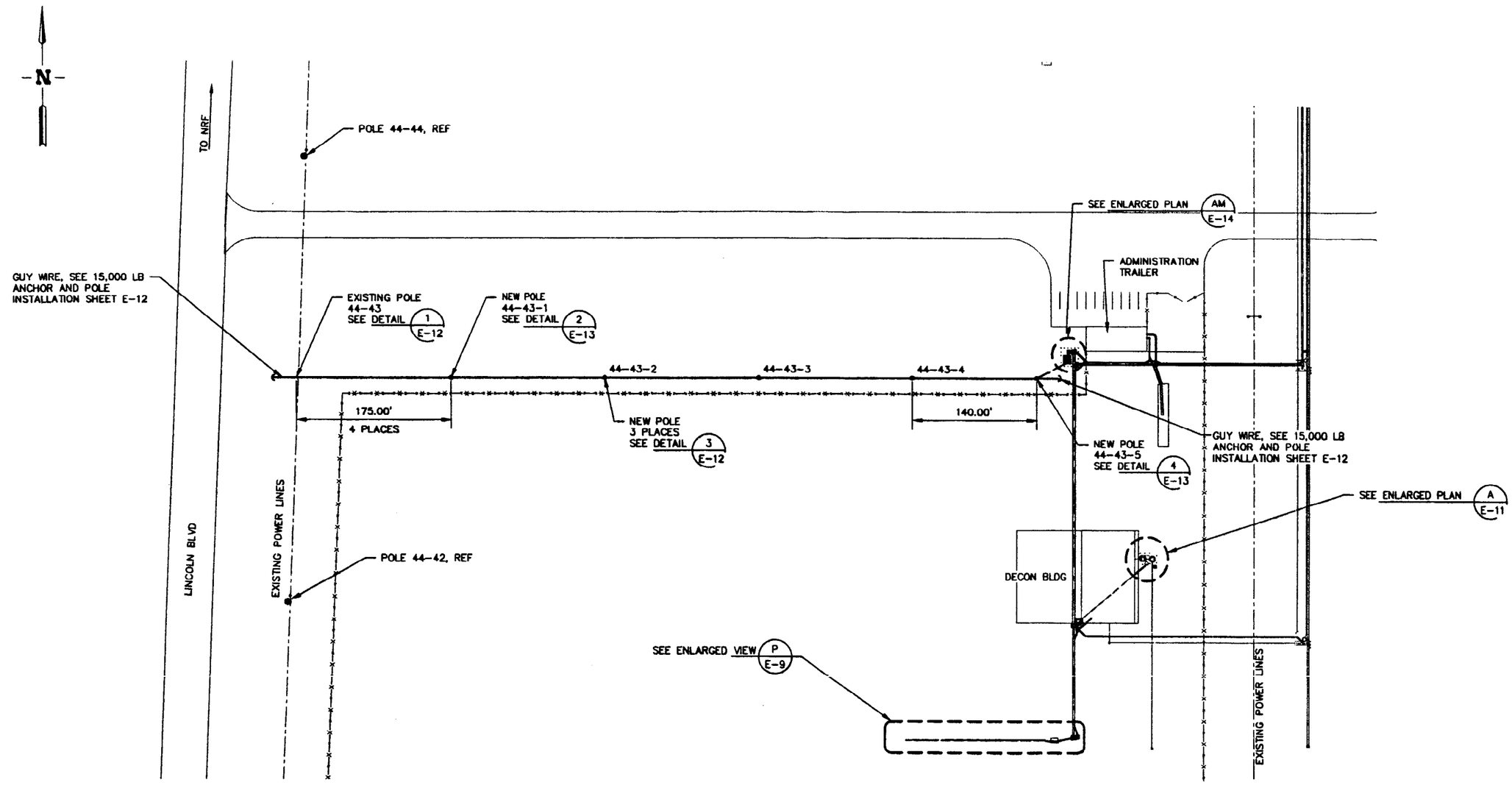

PLAN VIEW

SCALE: 1"=60.0'

XREF DRAWINGS
520110.dwg

FOR DRAWING INDEX SEE DRAWING NO. 520003	SUBCONTRACT NO.	INEEL
SCALE: 1" = 60.0'	REQUESTER: S.A. DAVIES	INTEC STAGING, STORAGE, SIZING AND TREATMENT FACILITY
	DESIGN: J DUGGAN	
	DRAWN: RICH WATSON	PLAN VIEW
	PROJECT NO. 020996	
	SPEC CODE	
DESIGN PHASE: AFC	FOR REVIEW/APPROVAL SIGNATURES SEE DAR NO. 88704	SIZE D · CAGE CODE 01MF3 · INDEX CODE NUMBER AREA 200 TYPE 0400 Q 10 DISC 090 · DWG-520063 · REV
SAFETY CATEGORY: LSC	EFFECTIVE DATE: 5/5/2002	SCALE: NOTED · SHEET E-2

PROFESSIONAL ENGINEER REGISTERED 5/07/02 STATE OF IDAHO JOHN E. DUGGAN

Layout Name: 520063
Date: 02/05/02 - 4:26 P.M.
File: 520063.dwg
Path: G:\Abr\SSSTF

REVISIONS		
REV	DESCRIPTION	EFFECTIVE DATE:

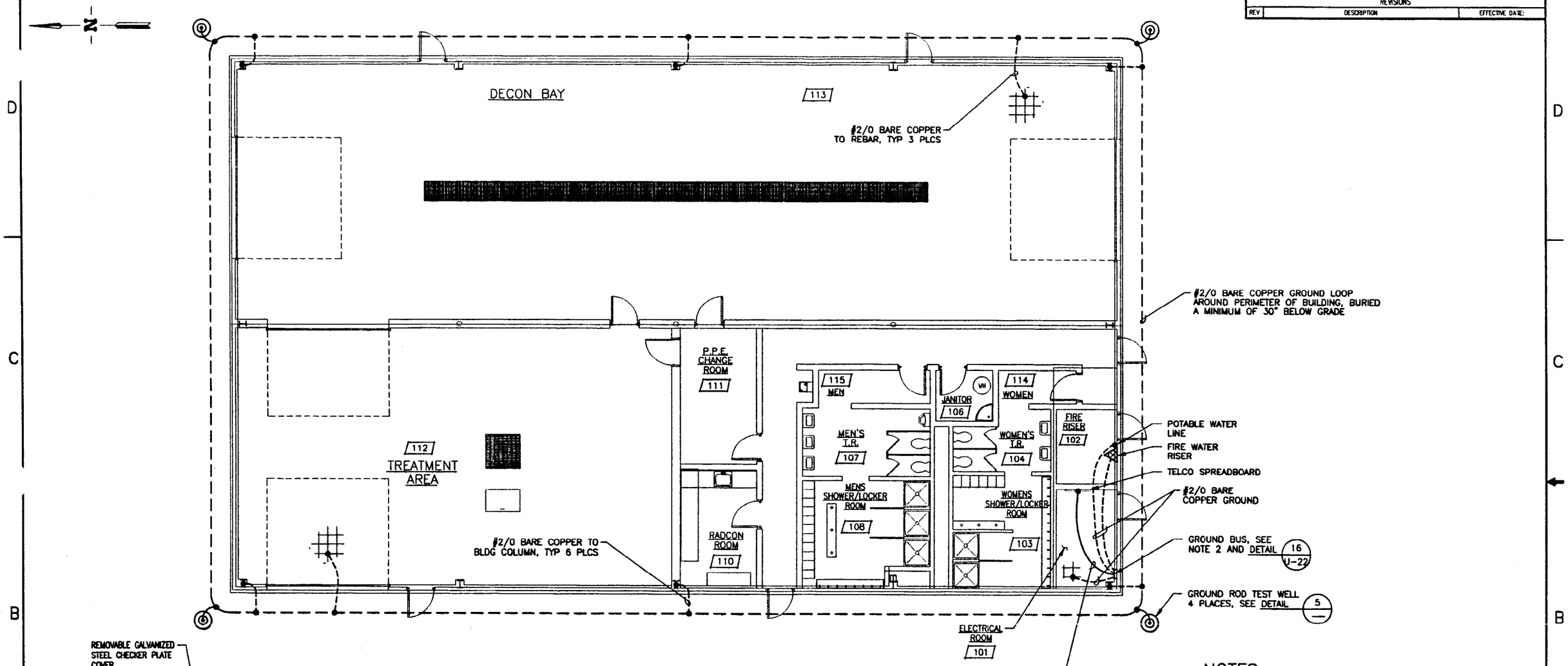

DECON BLDG GROUNDING PLAN

SCALE: 3/16"=1'-0"

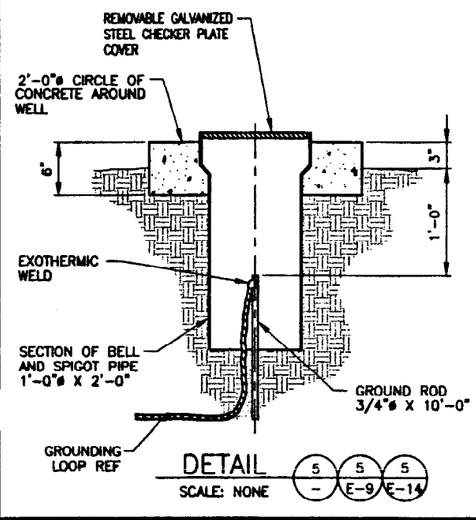

DETAIL

SCALE: NONE

5 / – 5 / E-9 5 / E-14

NOTES

1. ALL CONNECTIONS TO THE GROUND LOOP SHALL BE EXOTHERMIC WELDS OR NON REVERSIBLE COMPRESSION CONNECTIONS UNLESS OTHERWISE NOTED.
2. CONNECT GROUND LOOP AND ALL PANELS, CABINETS, BOXES, TRANSFORMERS, UPS, DUCT BANK AND FIRE RISER TO THE GROUND BUS USING COMPRESSION TERMINALS.
3. IN DECON AND TREATMENT AREAS, ALL BOXES, FITTINGS AND CONDUIT SHALL BE MOUNTED SO THAT THERE IS AT LEAST 1/4" AIR SPACE BETWEEN THE COMPONENT AND THE WALL OR MOUNTING SURFACE.

XREF DRAWINGS
520112.dwg

PROFESSIONAL ENGINEER REGISTERED 3/07/02 STATE OF IDAHO JOHN E. DUGGAN

FOR DRAWING INDEX SEE DRAWING NO. 520003	SUBCONTRACT NO.
SCALE: 3/16" = 1'-0"	REQUESTER: S. DAVIES
	DESIGN: J. DUGGAN
	DRAWN: RICH WATSON
	PROJECT NO. 020996
SCALE: 6" = 1'-0"	SPEC CODE
DESIGN PHASE: AFC	FOR REVIEW/APPROVAL SIGNATURES SEE DWR NO. 88704
SAFETY CATEGORY: LSC	EFFECTIVE DATE: 3/11/2002

INEEL BATTELLE ENERGY ALLIANCE, LLC

INTEC
STAGING, STORAGE, SIZING AND TREATMENT FACILITY

DECON BUILDING GROUNDING PLAN AND DETAILS

SIZE	CADE CODE	INDEX CODE NUMBER				DWG-	REV
		AREA	TYPE	CI	DWG		
D	01MF3	200	1688	10	090	520064	

SCALE: NOTED SHEET E-3

File: 520064.dwg
Path: G:\ab\SSSTF
Layout Name: 520064
Date: 01/31/02 - 5:00 P.M.
ID: MSC

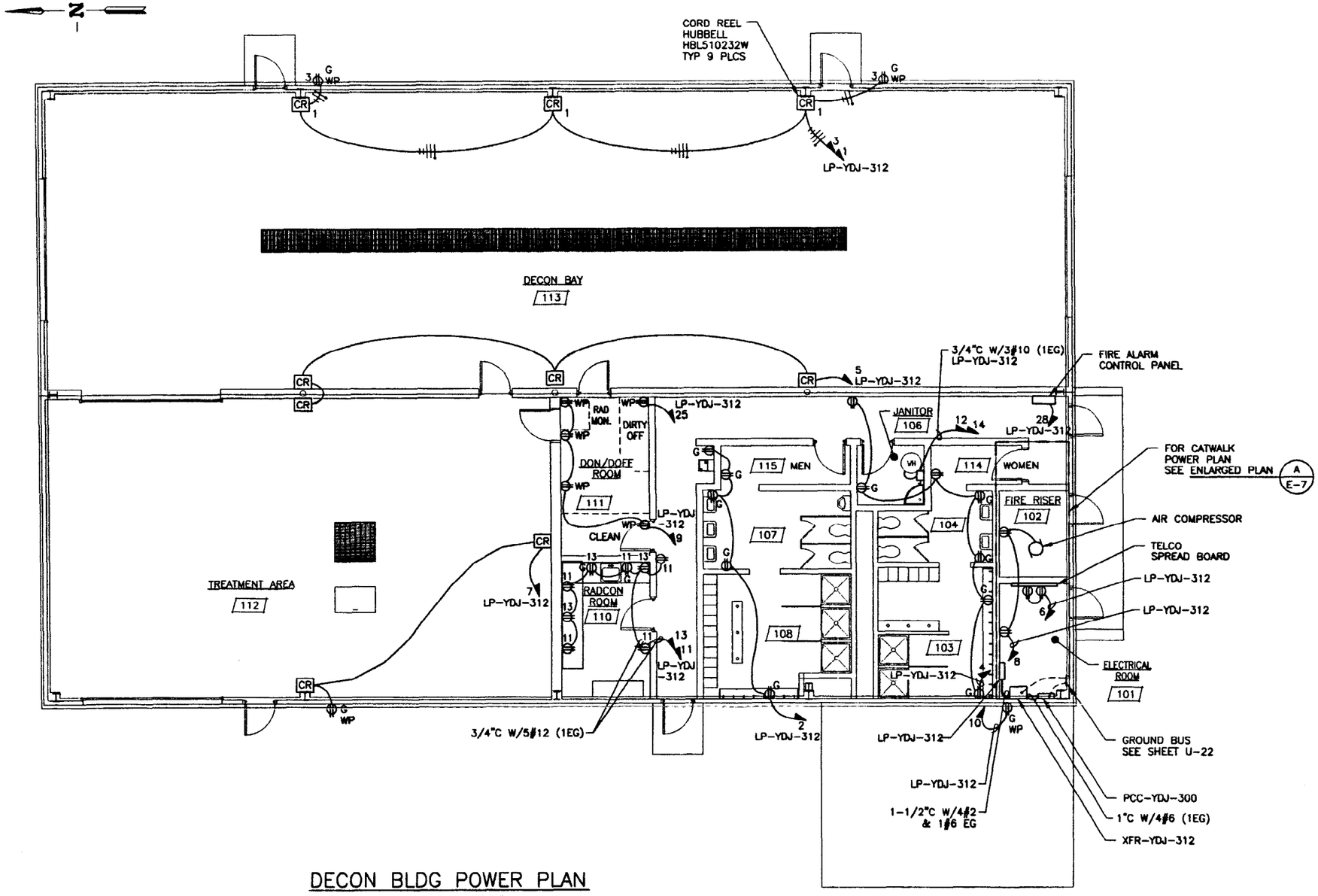

DECON BLDG POWER PLAN

SCALE: 3/16"=1'-0"

LEGEND

- DUPLEX RECEPTACLE
- G — GROUND FAULT CKT INTERRUPTION
- WP — WEATHERPROOF COVER
- DISCONNECT SWITCH
- CR — CORD REEL

NOTES

1. CONDUIT IN DECON BAY, TREATMENT AREA AND EXTERIOR SHALL BE 3/4" MINIMUM RGS. CONDUIT IN INTERIOR AREAS SHALL BE 3/4" MINIMUM EMT. CONDUITS SHALL CONTAIN 3#12 (1 EG) UNLESS OTHERWISE NOTED.
2. CONDUITS SHALL CONTAIN 1 PHASE CONDUCTOR AND NEUTRAL FOR EACH CIRCUIT IN ADDITION TO 1 EQUIPMENT GROUND WIRE IN EACH CONDUIT.
3. IN DECON AND TREATMENT AREAS, ALL BOXES, FITTINGS AND CONDUIT SHALL BE MOUNTED SO THAT THERE IS AT LEAST 1/4" AIR SPACE BETWEEN THE COMPONENT AND THE WALL OR MOUNTING SURFACE.

XREF DRAWINGS
520112.dwg

REVISIONS		
REV	DESCRIPTION	EFFECTIVE DATE:

FOR DRAWING INDEX SEE DRAWING NO. 520003	SUBCONTRACT NO.
SCALE: 3/16" = 1'-0"	REQUESTER: S. DAVIES
	DESIGN: J. DUGGAN
	DRAWN: RICH WATSON
	PROJECT NO. 020996
	SPEC CODE
DESIGN PHASE: AFC	FOR REVIEW/APPROVAL SIGNATURES SEE DAR NO. 88704
SAFETY CATEGORY: LSC	EFFECTIVE DATE: 3/11/2002

INEEL — BECHTEL BWXT IDAHO, LLC

INTEC
STAGING, STORAGE, SIZING AND TREATMENT FACILITY

DECON BUILDING POWER PLAN

SIZE	CAGE CODE	INDEX CODE NUMBER				DWG-	REV
		AREA	TYPE	G	ORG		
D	01MF3	200	1688	10	090	520065	

SCALE: 3/16"=1'-0" SHEET E-4

Layout Name: 520065 ID: MRC
Date: 01/31/02 - 5:02 P.M.
File: 520065.dwg
Path: G:\Ion\SSSTF

REVISIONS		
REV	DESCRIPTION	EFFECTIVE DATE:

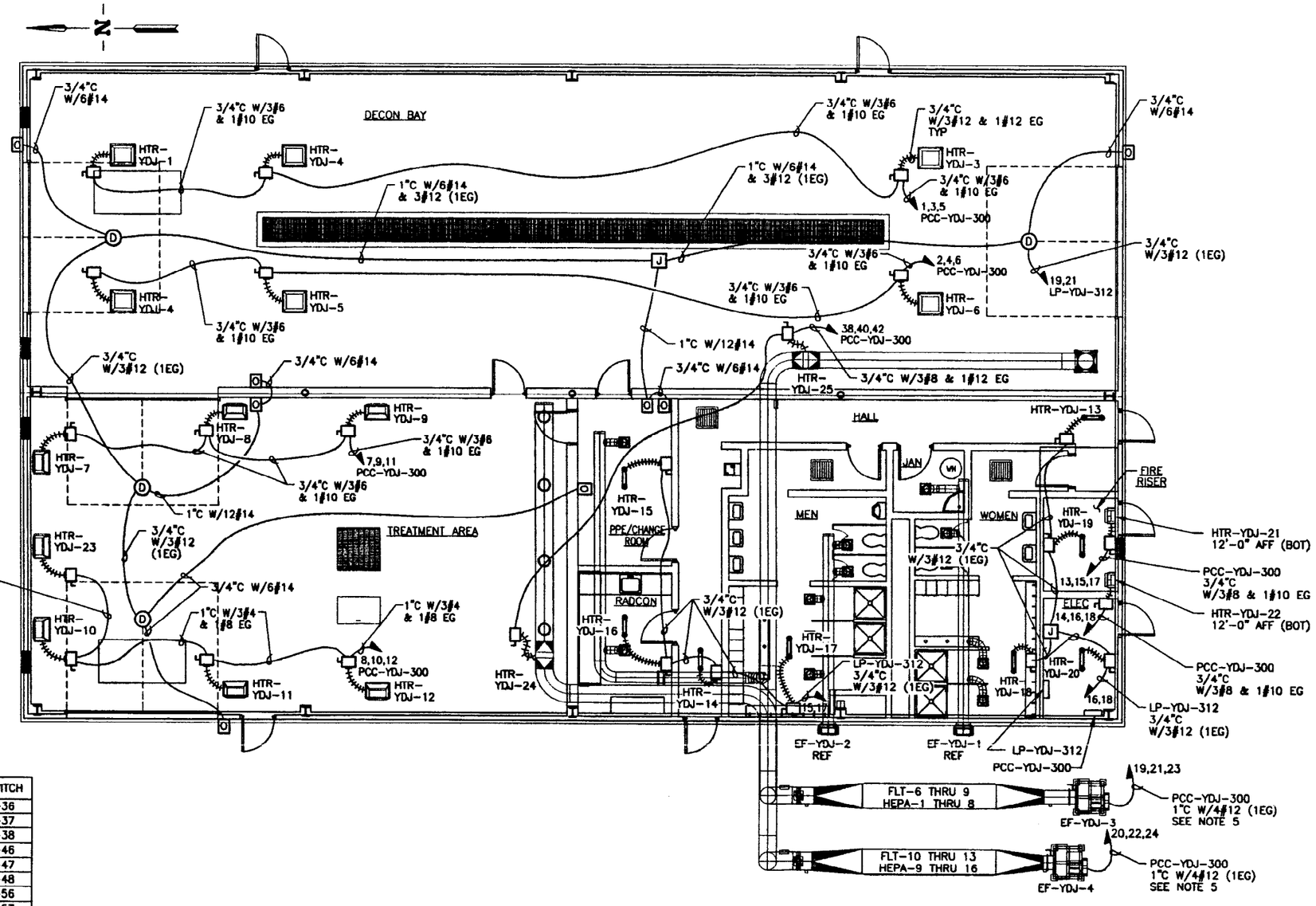

LEGEND

- SAFETY SWITCH
- JUNCTION BOX
- OVERHEAD DOOR CONTROLLER
- OVERHEAD DOOR OPERATOR

NOTES

1. CONDUIT IN DECON BAY AND TREATMENT AREAS SHALL BE RGS. CONDUIT IN ALL OTHER AREAS SHALL BE EMT.
2. FOR UNIT HEATERS HTR-YDJ-1 THRU HTR-YDJ-12, AND HTR-YDJ-23, MOUNT SAFETY SWITCHES ADJACENT TO THE UNIT HEATER WITH REQUIRED CLEARANCES.
3. FOR UNIT HEATERS HTR-YDJ-13 THRU HTR-YDJ-18, MOUNT SAFETY SWITCHES ON THE WALL, IN SIGHT OF THE ASSOCIATED HEATER.
4. UNIT HEATERS HTR-YDJ-21 AND HTR-YDJ-22 ARE LOCATED IN THE SPACE ABOVE THE FIRE RISER ROOM. MOUNT SAFETY SWITCHES ADJACENT TO THE UNIT HEATERS WITH REQUIRED CLEARANCES.
5. FINAL CONNECTION TO ALL UNIT HEATERS SHALL BE WITH LIQUID TIGHT FLEXIBLE CONDUIT.
6. EXHAUST FANS EF-3 AND EF-4 WILL BE SUPPLIED WITH INTEGRAL SAFETY SWITCHES AND CONTROLLERS. COORDINATE EXACT LOCATION OF POWER ENTRY POINT WITH THE MECHANICAL SUBCONTRACTOR.
7. IN DECON AND TREATMENT AREAS, ALL BOXES, FITTINGS AND CONDUIT SHALL BE MOUNTED SO THAT THERE IS AT LEAST 1/4" AIR SPACE BETWEEN THE COMPONENT AND THE WALL OR MOUNTING SURFACE.
8. ALL EQUIPMENT IN DAMP AREAS, INCLUDING SHOWER ROOMS, CHANGE ROOM, DECON BAY AND TREATMENT AREA SHALL BE NEMA 3R.

UNIT HEATER	SAFETY SWITCH
HTR-YDJ-1	FIS-YDJ-36
HTR-YDJ-2	FIS-YDJ-37
HTR-YDJ-3	FIS-YDJ-38
HTR-YDJ-4	FIS-YDJ-46
HTR-YDJ-5	FIS-YDJ-47
HTR-YDJ-6	FIS-YDJ-48
HTR-YDJ-7	FIS-YDJ-56
HTR-YDJ-8	FIS-YDJ-57
HTR-YDJ-9	FIS-YDJ-58
HTR-YDJ-10	FIS-YDJ-65
HTR-YDJ-11	FIS-YDJ-66
HTR-YDJ-12	FIS-YDJ-67
HTR-YDJ-13	FIS-YDJ-74
HTR-YDJ-14	FIS-YDJ-70
HTR-YDJ-15	FIS-YDJ-71
HTR-YDJ-16	FIS-YDJ-72
HTR-YDJ-17	FIS-YDJ-73
HTR-YDJ-18	FIS-YDJ-75
HTR-YDJ-19	FIS-YDJ-76
HTR-YDJ-20	FIS-YDJ-77
HTR-YDJ-21	FIS-YDJ-221
HTR-YDJ-22	FIS-YDJ-49
HTR-YDJ-23	FIS-YDJ-223
HTR-YDJ-24	FIS-YDJ-78
HTR-YDJ-25	FIS-YDJ-79

DECON BLDG H & V POWER PLAN

SCALE: 3/16"=1'-0"

XREF DRAWINGS
520112.dwg
520059.dwg

PROFESSIONAL ENGINEER — JOHN E. DUGGAN — STATE OF IDAHO — 3/07/02

FOR DRAWING INDEX SEE DRAWING NO. 520003	SUBCONTRACT NO.	INEEL
SCALE: 3/16" = 1'-0"	REQUESTER: S. DAVIES	INTEC STAGING, STORAGE, SIZING AND TREATMENT FACILITY
	DESIGN: J. DUGGAN	DECON BLDG H & V POWER PLAN
	DRAWN: RICH WATSON	
	PROJECT NO. 020996	
	SPEC CODE	
DESIGN PHASE: AFC	FOR REVIEW/APPROVAL SIGNATURES SEC BAR NO. 88704	SIZE D · CADE CODE 01MF3 · INDEX CODE NUMBER AREA 200 TYPE 1688 CL 10 ORIG 090 · DWG-520066 · REV
SAFETY CATEGORY: LSC	EFFECTIVE DATE: 3/11/2002	SCALE: 3/16"=1'-0" · SHEET E-5

File: 520066.dwg
Path: G:\xbr\SSSTF
Layout Name: 520066 | ID: MBC
Date: 01/31/02 - 5:04 P.M.

REVISIONS		
REV	DESCRIPTION	EFFECTIVE DATE:

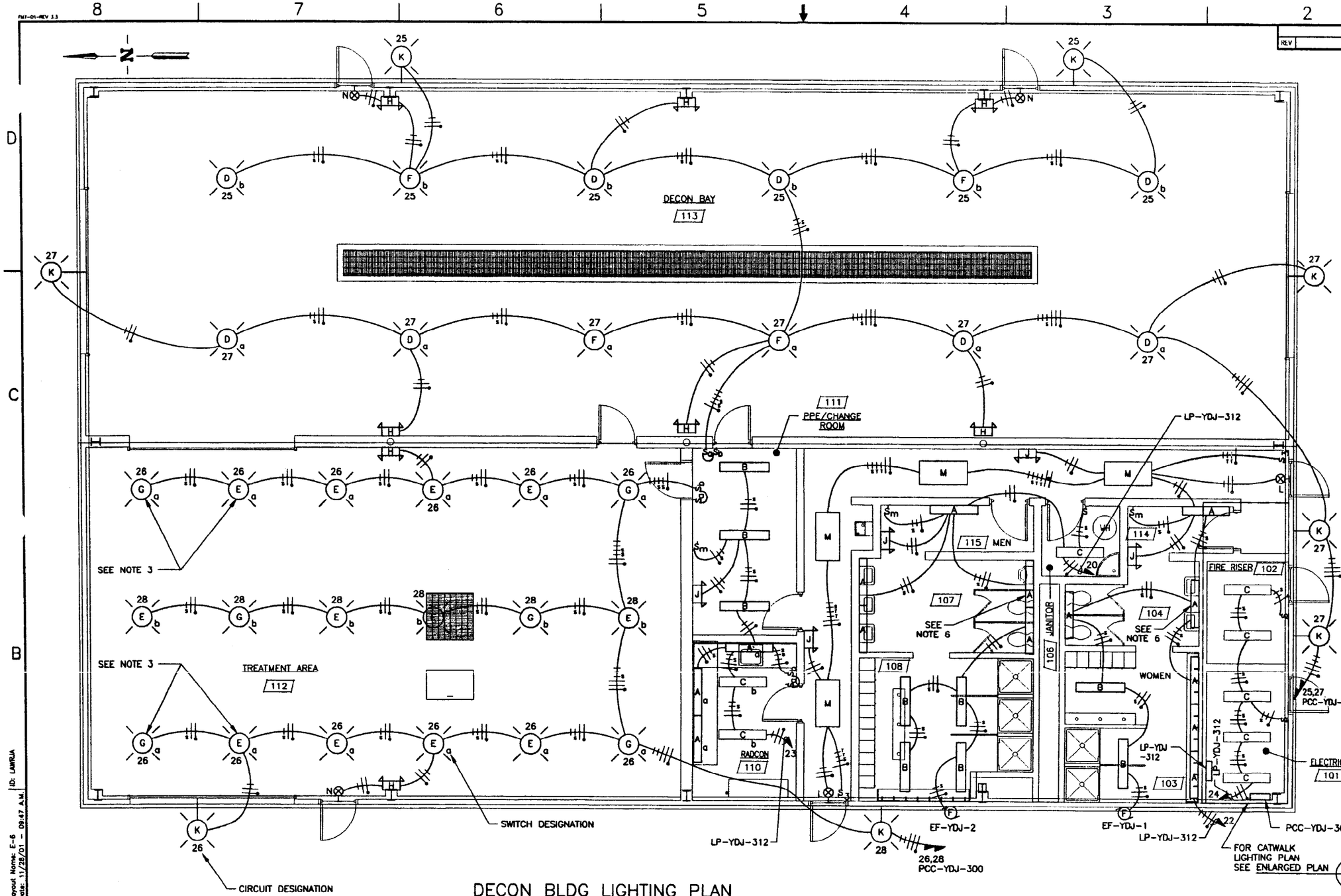

LEGEND

- FLUORESCENT LIGHT FIXTURE
- EMERGENCY LIGHT FIXTURE
- EXIT LIGHT FIXTURE
- INCANDESCENT LIGHT FIXTURE
- $ SINGLE POLE SWITCH
- $3 3-WAY SWITCH
- $m OCCUPANCY SENSOR SWITCH
- (F) EXHAUST FAN

CONDUIT, SEE NOTE 1
3W SWITCH TRAVELER
SWITCHED
GROUND CONDUCTOR
NEUTRAL CONDUCTOR
PHASE CONDUCTOR

NOTES

1. CONDUIT IN DECON BAY AND TREATMENT AREAS SHALL BE 3/4" MINIMUM RGS. CONDUIT IN ALL OTHER AREAS SHALL BE 3/4" MINIMUM EMT.
2. CONDUIT IN DECON BAY AND TREATMENT AREAS SHALL BE EXPOSED. CONDUIT IN ALL OTHER AREAS SHALL BE CONCEALED IN THE WALLS OR ABOVE THE CEILING.
3. ADJUST HEIGHT OF LIGHT FIXTURES IN THESE AREAS AS REQUIRED TO AVOID INTERFERENCE WITH OVERHEAD DOOR OPERATORS.
4. LOCATION OF FIXTURES IN DECON BAY AND TREATMENT AREA ARE APPROXIMATE. ADJUST LOCATION AS REQUIRED TO FACILITATE INSTALLATION, LOCATION OF STRUCTURAL MEMBERS AND LOCATION OF UNIT HEATERS.
5. SEE SHEET E-7 FOR FIXTURE SCHEDULE.
6. THESE FIXTURES TO REMAIN ENERGIZED AT ALL TIMES.
7. IN DECON AND TREATMENT AREAS, ALL BOXES, FITTINGS AND CONDUIT SHALL BE MOUNTED SO THAT THERE IS AT LEAST 1/4" AIR SPACE BETWEEN THE COMPONENT AND THE WALL OR MOUNTING SURFACE.

XREF DRAWINGS
520112.dwg

DECON BLDG LIGHTING PLAN

SCALE: 1/4"=1'-0"

FOR DRAWING INDEX SEE DRAWING NO. 520003	SUBCONTRACT NO.
SCALE: 1/4" = 1'-0"	REQUESTER: S. DAVIES
	DESIGN: J. DUGGAN
	DRAWN: RICH WATSON
	PROJECT NO. 020996
	SPEC CODE
DESIGN PHASE: AFC	FOR REVIEW/APPROVAL SIGNATURES SEE DAR NO. 88704
SAFETY CATEGORY: LSC	EFFECTIVE DATE: S/H/2nd S.

INEEL BECHTEL BWXT IDAHO, LLC

INTEC
STAGING, STORAGE, SIZING
AND TREATMENT FACILITY

DECON BUILDING LIGHTING PLAN

SIZE	CAGE CODE	INDEX CODE NUMBER				DWG-	REV
		AREA	TYPE	CL	ORIG		
D	01MF3	200	1688	10	090	520067	

SCALE: 1/4"=1'-0" SHEET E-6

PROFESSIONAL ENGINEER REGISTERED 320 STATE OF IDAHO JOHN E. DUGGAN 12/07/01

FMT-01-REV 3.3

File: 020996-E6.dn
Path: P:\ker\SSSTF
Layout Name: E-6
Date: 11/28/01 - 09:47 A.M.
ID: LAMRUA

REVISIONS		
REV	DESCRIPTION	EFFECTIVE DATE:

LIGHTING FIXTURE SCHEDULE

FIXTURE	MANUFACTURER	CATALOG NO.	LAMP TYPE	NUMBER OF LAMPS	VOLTS	MOUNTING	REMARKS
A	LITHONIA	WP 2 32 DO 120 ES GLR	FLUORESCENT	2	120	CORNER	
B	LITHONIA	DM 2 32 120 ES GLR	FLUORESCENT	2	120	CEILING	
C	LITHONIA	AW 2 32 120 ES GLR	FLUORESCENT	2	120	CEILING	
D	LITHONIA	TXL 250M A20 277 SF	METAL HALIDE	1	277	PENDANT	
E	LITHONIA	TXL 175M A20 277 SF	METAL HALIDE	1	277	PENDANT	
F	LITHONIA	TXL 250M A20 277 SFQRSTD	METAL HALIDE	1	277	PENDANT	W/QUARTZ RESTRIKE SYSTEM TIME DELAY
G	LITHONIA	TXL 175M A20 277 SFQRSTD	METAL HALIDE	1	277	PENDANT	W/QUARTZ RESTRIKE SYSTEM TIME DELAY
H	LITHONIA	ELU4X WL N2512	INCANDESCENT 25W	2	120/277	WALL	
J	LITHONIA	ELU4 H1212	HALOGEN 12W	2	120/277	WALL	
K	LITHONIA	KSF1 70S R3 277 WB04 SF PE7 DWH	HI PRESSURE SODIUM 70W	1	277	WALL	DARK SKY COMPLIANT
L	LITHONIA	LQM P W1 R 120 ELN	LED	–	120	WALL	
M	LITHONIA	2SP G 2 32 A12 120 ES GLR	FLUORESCENT	2	120	RECESSED	
N	LITHONIA	LV P W1 R 277 ELN DL	LED	–	277	BACK	

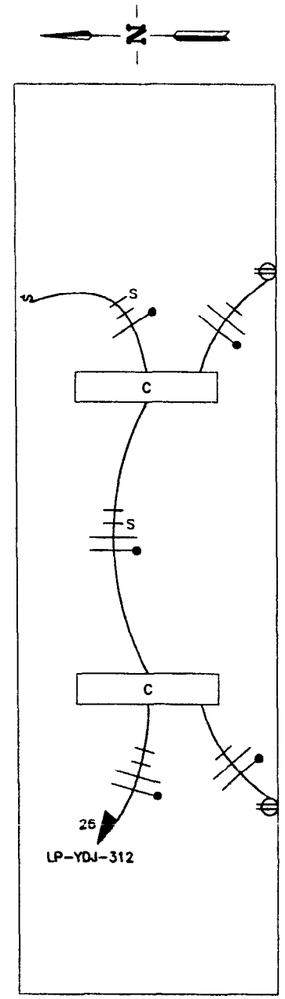

ENLARGED PLAN (A/E-4) (A/E-6)
(CATWALK LIGHTING AND POWER)
SCALE: 1/2"=1'-0"
SEE NOTE 1

NOTES

1. MOUNT CATWALK LIGHT FIXTURES FROM STRUCTURAL STEEL. INSTALL UNISTRUT OR EQUIVALENT AS REQUIRED TO MOUNT CATWALK SWITCH AND RECEPTACLES.
2. SEE SHEET E-8 FOR PANEL SCHEDULES.
3. IN CATWALK AREA, ALL BOXES, FITTINGS AND CONDUIT SHALL BE MOUNTED SO THAT THERE IS AT LEAST 1/4" AIR SPACE BETWEEN THE COMPONENT AND THE WALL OR MOUNTING SURFACE.
4. SEE UTILITIES SHEETS FOR DUCT BANK INSTALLATION DETAILS.

PROFESSIONAL ENGINEER CERTIFICATE NO. 8320 JOHN E. DUGGAN STATE OF IDAHO 3/07/02

FOR DRAWING INDEX SEE DRAWING NO.	520003
SCALE: 1/2" = 1'-0"	
DESIGN PHASE:	AFC
SAFETY CATEGORY:	LSC
SUBCONTRACT NO.	
REQUESTER:	S. DAVIES
DESIGN:	J. DUGGAN
DRAWN:	RICH WATSON
PROJECT NO.	020996
SPEC CODE	
FOR REVIEW/APPROVAL SIGNATURES SEE DAR NO. 88704	
EFFECTIVE DATE:	3/8/2002

INEEL LOCKHEED MARTIN IDAHO, LLC

INTEC
STAGING, STORAGE, SIZING AND TREATMENT FACILITY

FIXTURE SCHEDULE AND ENLARGED PLAN

SIZE	CAGE CODE	INDEX CLICK NUMBER AREA	TYPE	Q	OBJ	DWG-	REV
D	01MF3	200	11688	10	090	520068	

SCALE: NOTED SHEET E-7

File: 520068.dwg Path: G:\lab\SSSTF
Layout Name: 520068 Date: 01/29/02 - 8:53 P.M. ID: MGC

REVISIONS		
REV	DESCRIPTION	EFFECTIVE DATE:

PANEL LP-YDJ-312 LOCATION NORTH WALL ELECT RM

AMPS 100A MAIN 100A MCB-QBHW 4 WIRE 3ø TYPE CUTLER-HAMMER POW-R-LINE 1A
VOLTAGE 208/120 FEED BOTTOM MOUNTING SURFACE DIM. 48" x 20" x 5 3/4"

BRANCH CIRCUIT	LINE	LOAD WATTS	AMP TRIP	CKT NO.	CKT NO.	AMP TRIP	LOAD WATTS	LINE	BRANCH CIRCUIT
CORD REELS-DECON BAY	A	540	20	1	2	20	900	A	RCPT-MENS RM/HALL
EXT RCPT-EAST WALL	B	360	20	3	4	20	1260	B	RCPT-WOMENS RM/HALL
CORD REELS-DECON/TRTMNT	C	720	20	5	6	20	360	C	RCPT-TELEPHONE BOARD
WEST EXT RCPT/CORD REELS	A	540	20	7	8	20	360	A	RCPT-ELECT/FIRE RISER RM & AIR COMPRESSOR
RCPT-HALL, PPE/CHANGE RM	B	900	20	9	10	20	180	B	RCPT-SW EXTERIOR WALL
RCPT-RADCON RM	C	720	20	11	12	30	2250	C	WTR HTR-JANITOR RM
RCPT-RADCON RM	A	540	20	13	14		2250	A	
HTR-YDJ-14 THRU HTR-YDJ-17	B	1600	20	15	16	20	1600	B	HTR-YDJ-13, HTR-YDJ-18 THRU HTR-YDJ-20
	C	1600		17	18		1600	C	
OVERHEAD DOOR OPERATORS	A	1000	20	19	20	20	180	A	LTG-MENS RM & EF-YDJ-2
	B	1000		21	22	20	180	B	LTG-HALL/WOMENS RM & EF-YDJ-1
LTG-RADCON, PPE/CHANGE RM	C	800	20	23	24	20	180	C	LTG-ELECT/FIRE RISER RM
RCPT-PPE/CHANGE RM	A	500	20	25	26	20	610	A	LTG & RCPT-CATWALK
INSTRUMENT CONTROL PANEL	B	300	20	27	28	20	200	B	FIRE ALARM CONTROL PANEL
SPACE	C			29	30			C	SPACE
SPACE	A			31	32			A	SPACE
SPACE	B			33	34			B	SPACE
SPACE	C			35	36			C	SPACE
SPACE	A			37	38			A	SPACE
SPACE	B			39	40			B	SPACE
SPACE	C			41	42			C	SPACE

TOTAL LOAD/PHASE-WATTS A 7420 B 7580 C 8230 FED PCC-YDJ-300, CKT 29,31,33
AMPS/PHASE A 62 B 63 C 69 FROM VIA XFR-YDJ-312
WIRE SIZE 4#2 & 1#6 GND CONDUIT SIZE 2"
SHORT CIRCUIT INTERRUPTING CAPACITY 22KA

PANEL PCC-YDJ-300 LOCATION WEST WALL ELECT RM

AMPS 400A MAIN 400A MCB-HKD 4 WIRE 3ø TYPE CUTLER-HAMMER POW-R-LINE 2A
VOLTAGE 480/277 FEED BOTTOM MOUNTING SURFACE DIM. 48" x 20" x 5 3/4"

BRANCH CIRCUIT	LINE	LOAD WATTS	AMP TRIP	CKT NO.	CKT NO.	AMP TRIP	LOAD WATTS	LINE	BRANCH CIRCUIT
HTR-YDJ-1	A	13500	60	1	2	60	13500	A	HTR-YDJ-4
HTR-YDJ-2	B	13500		3	4		13500	B	HTR-YDJ-5
HTR-YDJ-3	C	13500		5	6		13500	C	HTR-YDJ-6
HTR-YDJ-7	A	13500	60	7	8	90	18000	A	HTR-YDJ-10 HTR-YDJ-23
HTR-YDJ-8	B	13500		9	10		18000	B	HTR-YDJ-11
HTR-YDJ-9	C	13500		11	12		18000	C	HTR-YDJ-12
HTR-YDJ-21	A	10000	50	13	14	50	10000	A	HTR-YDJ-22
	B	10000		15	16		10000	B	
	C	10000		17	18		10000	C	
EF-YDJ-3, 5HP	A	2020	20	19	20	20	2920	A	EF-YDJ-4, 7.5HP
	B	2020		21	22		2920	B	
	C	2020		23	24		2920	C	
LTG-DECON BAY	A	2100	20	25	26	20	2820	A	LTG-TREATMENT AREA
LTG-DECON BAY/EXTERIOR	B	2400	20	27	28	20	1260	B	LTG-TREATMENT AREA/EXT.
LP-YDJ-312	C	8230	60	29	30			C	SPACE
VIA XFR YDJ-312	A	7420		31	32	20	800	A	LIFT STATION CP-YDJ-701
	B	7580		33	34		800	B	
SPACE	C			35	36		800	C	
SPACE	A			37	38	40	6667	A	HTR-YDJ-24 HTR-YDJ-25
SPACE	B			39	40		6667	B	
SPACE	C			41	42		6667	C	

TOTAL LOAD/PHASE-WATTS A 103247 B 102147 C 99137 FED PCC-B21-49
AMPS/PHASE A 373 B 369 C 358 FROM CKT 1,3,5
WIRE SIZE 2 SETS 4-350 KCMIL & 1#2/0 GND CONDUIT SIZE 4"
SHORT CIRCUIT INTERRUPTING CAPACITY 65KA

PANEL PCC-B21-49 LOCATION SOUTHWEST CORNER OF CPP-1689

AMPS 800A MAIN 600A-CB 4 WIRE 3ø TYPE SQUARE D, I-LINE
VOLTAGE 480/277V FEED BOTTOM MOUNTING SURFACE DIM. 42"W X 68"H X 9 1/2"D

BRANCH CIRCUIT	LINE	LOAD WATTS	AMP TRIP	CKT NO.	CKT NO.	AMP TRIP	LOAD WATTS	LINE	BRANCH CIRCUIT
DECON BLDG	A	103247	400	1	2	50	13500	A	ADMIN TRAILER CPP-1689
CPP-1688	B	102147		3	4		13500	B	
PCC-YDJ-300	C	99137		5	6		13500	C	
FUTURE (ICDF)	A	16667	100	7	8	50	7200	A	HEAD BOLT HEATER PANEL LP-YDJ-104
	B	16667		9	10		4800	B	
	C	16667		11	12		3600	C	
FUTURE TREATMENT	A		100	13	14	20	667	A	SEWAGE LIFT STATION CP-YDJ-702
	B			15	16		667	B	
	C			17	18		667	C	
SPACE	A			19	20			A	SPACE
	B			21	22			B	
	C			23	24			C	
	A			25	26			A	
	B			27	28			B	
	C			29	30			C	

TOTAL LOAD/PHASE-WATTS A 141281 B 137781 C 133571 FED SCOVILLE SUBSTATION
AMPS/PHASE A 510 B 497 C 482 FROM CKT 44 VIA XFR-B21-36
WIRE SIZE 2 SETS 4-350 KCMIL & 1#2/0 GND CONDUIT SIZE TWO 3" CONDUITS
SHORT CIRCUIT INTERRUPTING CAPACITY 100K - RMS AMPERES

PANEL LP-YDJ-104 LOCATION HEADBOLT HEATER RACK

AMPS SEE NOTE 1 MAIN SEE NOTE 1 4 WIRE 3ø TYPE CUTLER-HAMMER P48G28T30P
VOLTAGE 480-208/120 FEED TOP MOUNTING SURFACE DIM. 41 7/8" X 29 7/8" X 13 5/8"

BRANCH CIRCUIT	LINE	LOAD WATTS	AMP TRIP	CKT NO.	CKT NO.	AMP TRIP	LOAD WATTS	LINE	BRANCH CIRCUIT
HEADBOLT HEATER	A	2400	30	1	2	30	2400	A	HEADBOLT HEATER
HEADBOLT HEATER	B	1200	20	3	4	20	1200	B	HEADBOLT HEATER
HEADBOLT HEATER	C	1200	20	5	6	20	1200	C	HEADBOLT HEATER
HEADBOLT HEATER	A	1200	20	7	8	20	1200	A	HEADBOLT HEATER
HEADBOLT HEATER	B	1200	20	9	10	20	1200	B	HEADBOLT HEATER
HEADBOLT HEATER	C	1200	20	11	12			C	SPACE
SPACE	A			13	14			A	SPACE
SPACE	B			15	16			B	SPACE
SPACE	C			17	18			C	SPACE
SPACE	A			19	20			A	SPACE
SPACE	B			21	22			B	SPACE
SPACE	C			23	24			C	SPACE

TOTAL LOAD/PHASE-WATTS A 7200 B 4800 C 3600 FED PCC-B21-49
AMPS/PHASE A 60 B 40 C 30 FROM CKT 8,10,12 VIA FIS-YDJ-103
WIRE SIZE 3#6 & 1#6 GND CONDUIT SIZE 1"
SHORT CIRCUIT INTERRUPTING CAPACITY 14KA

NOTES

1. LP-YDJ-104 IS A PACKAGED UNIT CONSISTING OF A 40 AMPERE MAIN CIRCUIT BREAKER, 480-208Y/120V 30KVA TRANSFORMER (XFR-YDJ-104), 80 AMPERE SECONDARY BREAKER AND BRANCH CIRCUIT BREAKERS AS INDICATED.

PROFESSIONAL ENGINEER REGISTERED STATE OF IDAHO JOHN E. DUGGAN 3/07/02

FOR DRAWING INDEX SEE DRAWING NO. 520003	SUBCONTRACT NO.	INEEL BECHTEL BWXT IDAHO, LLC
NO SCALE	REQUESTER: S. DAVIES DESIGN: J. DUGGAN DRAWN: RICH WATSON PROJECT NO. 020996 SPEC CODE	INTEC STAGING, STORAGE, SIZING AND TREATMENT FACILITY PANEL SCHEDULES
DESIGN PHASE: AFC	FOR REVIEW/APPROVAL SIGNATURES SEE DAR NO. 88704	SIZE D CAGE CODE 01MF3 INDEX CODE NUMBER AREA 200 TYPE 1688 Q 10 SEQ 090 DWG-520069 REV
SAFETY CATEGORY: LSC	EFFECTIVE DATE: 3/11/2002	SCALE: NONE SHEET E-8

Layout Name: 520069 ID: KBR
Date: 03/06/02 - 08:53 A.M.
File: 520069.dwg
Path: K:\SSSTF

REVISIONS		
REV	DESCRIPTION	EFFECTIVE DATE:

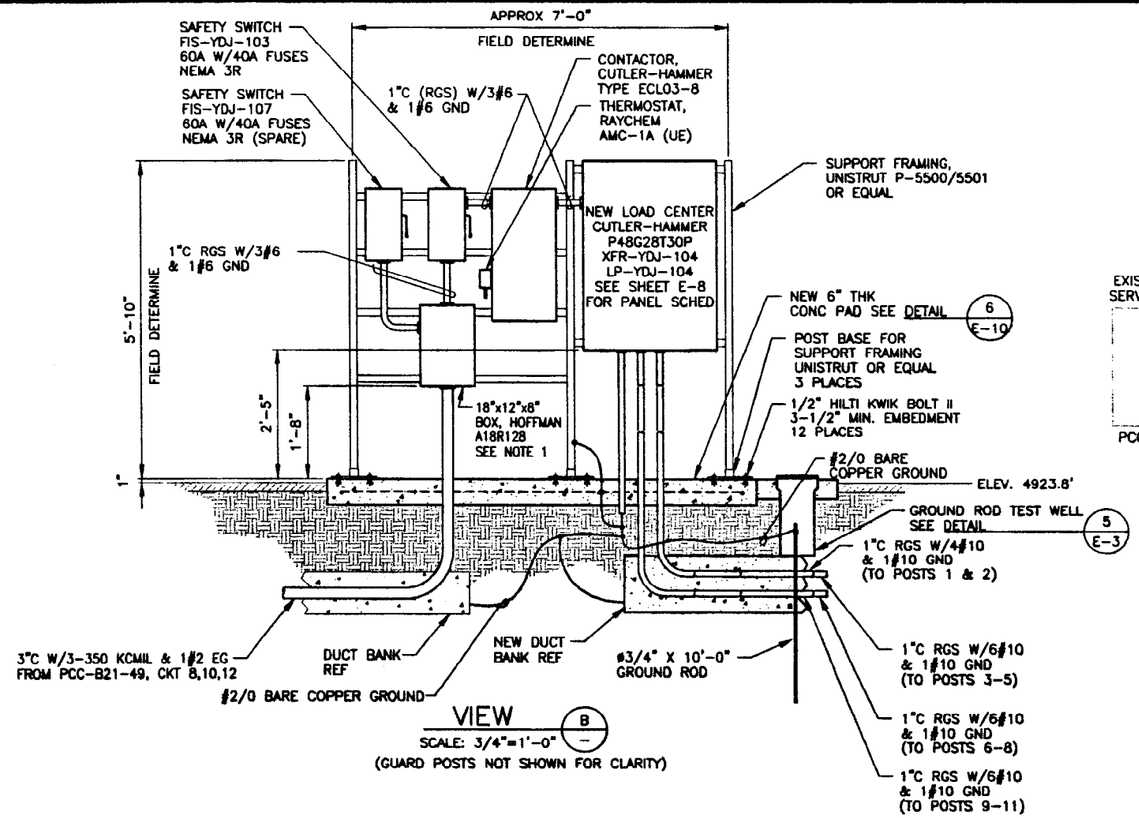

VIEW B –
SCALE: 3/4"=1'-0"
(GUARD POSTS NOT SHOWN FOR CLARITY)

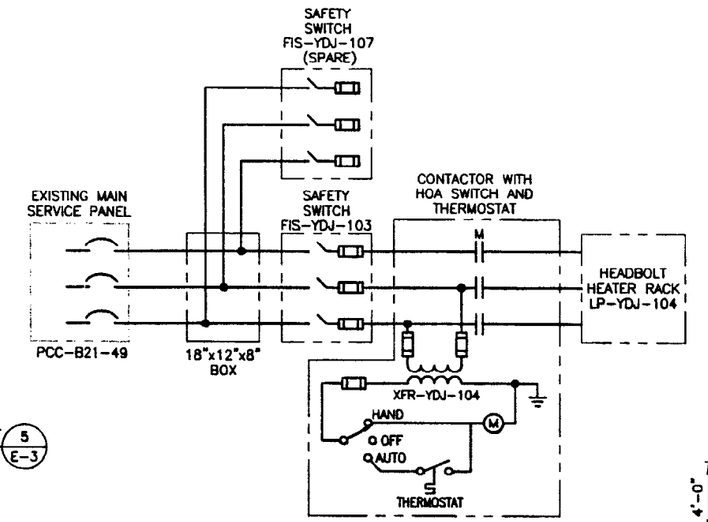

WIRING DIAGRAM

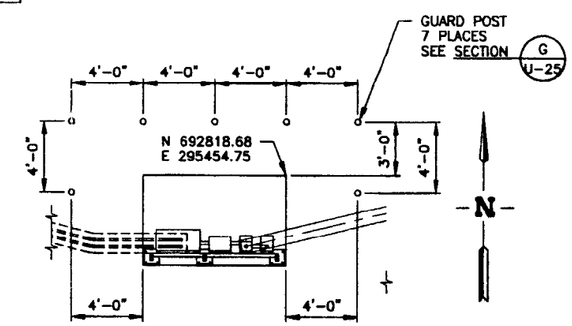

ENLARGED VIEW
SCALE: 1/4"=1'-0"

NOTES

1. SPLICE 350 KCMIL CONDUCTORS TO #6 CONDUCTORS USING NON-REVERSABLE COMPRESSION TYPE CONNECTORS AND INSULATE TO MATCH CABLE VOLTAGE RATING.

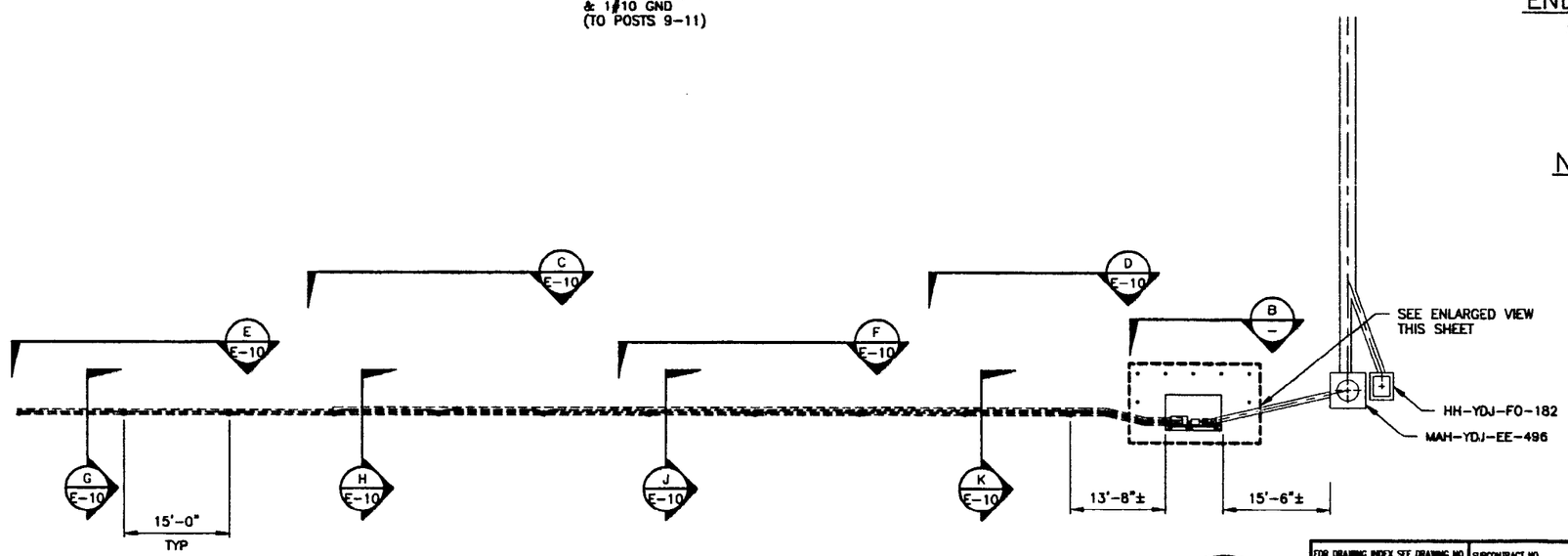

ENLARGED PLAN P E-2
SCALE: 1"=10.0'

XREF DRAWINGS
520110.dwg

PROFESSIONAL ENGINEER
JOHN E. DUGGAN
STATE OF IDAHO
7/01/02

SCALE: 1/4" = 1'-0"

FOR DRAWING INDEX SEE DRAWING NO. 520003	SUBCONTRACT NO.	INEEL BECHTEL BWXT IDAHO, LLC
SCALE: 3/4" = 1'-0" / SCALE: 1" = 10.0'	REQUESTER: S. DAVIES	INTEC STAGING, STORAGE, SIZING AND TREATMENT FACILITY
	DESIGN: J. DUGGAN	
	DRAWN: RICH WATSON	ENLARGED PLAN, VIEWS AND DIAGRAM
	PROJECT NO. 020996	
	SPEC CODE	
DESIGN PHASE: AFC	FOR REVIEW/APPROVAL SIGNATURES SEE DAR NO. 88704	SIZE D · CADD CODE 01MF3 · INDEX CODE NUMBER AREA 200 TYPE 0400 CL 10 DWG 090 · DWG-520070 · REV
SAFETY CATEGORY: LSC	EFFECTIVE DATE: 3/15/2002	SCALE: NOTED · SHEET E-9

Layout Name: 520070 Date: 02/05/02 - 4:00 P.M. ID: MBC
File: 520070.dwg Path: D:\bar\SSSTF

REVISIONS		
REV	DESCRIPTION	EFFECTIVE DATE:

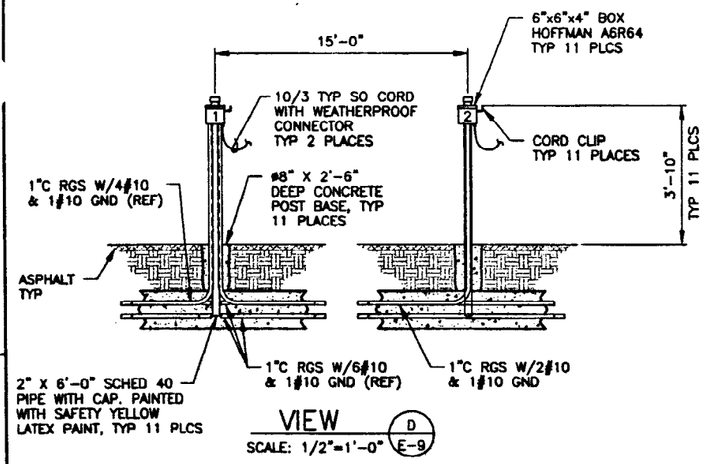

VIEW D E-9
SCALE: 1/2"=1'-0"

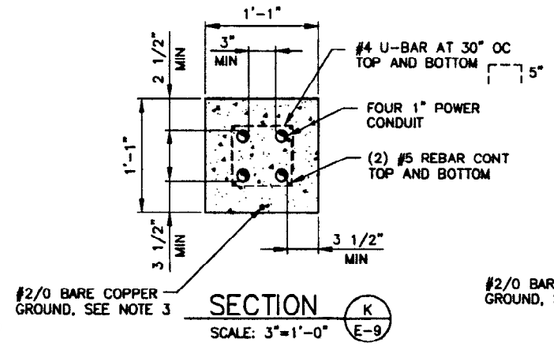

SECTION K E-9
SCALE: 3"=1'-0"

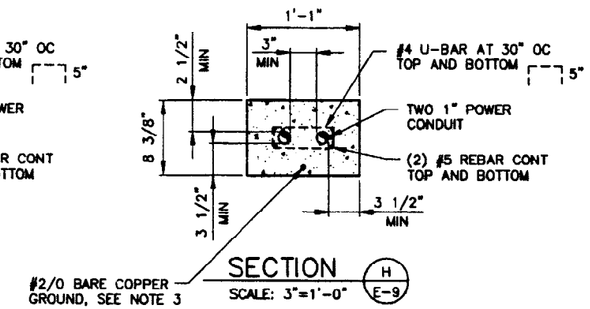

SECTION H E-9
SCALE: 3"=1'-0"

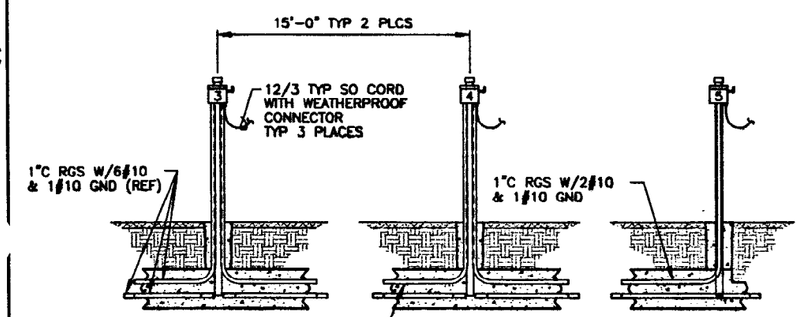

VIEW F E-9
SCALE: 1/2"=1'-0"

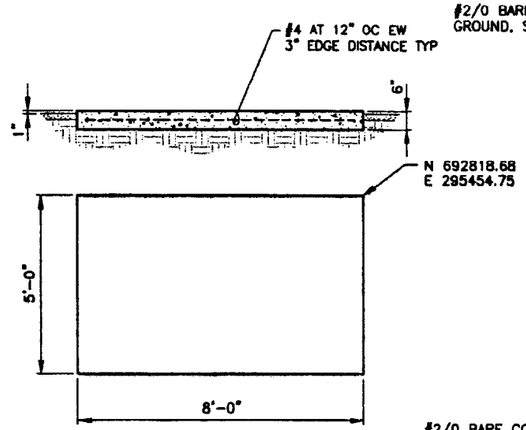

DETAIL 6 E-9
SCALE: 1/2"=1'-0"

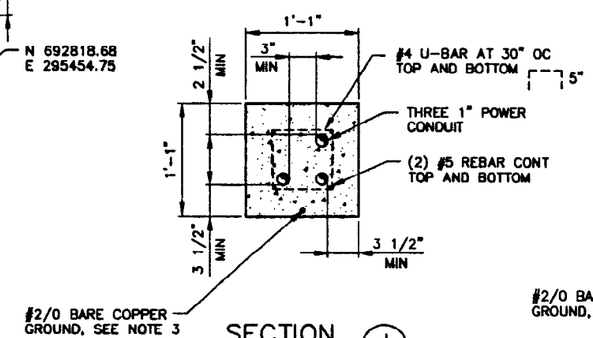

SECTION J E-9
SCALE: 3"=1'-0"

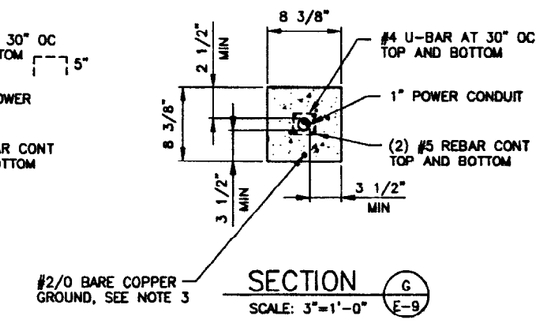

SECTION G E-9
SCALE: 3"=1'-0"

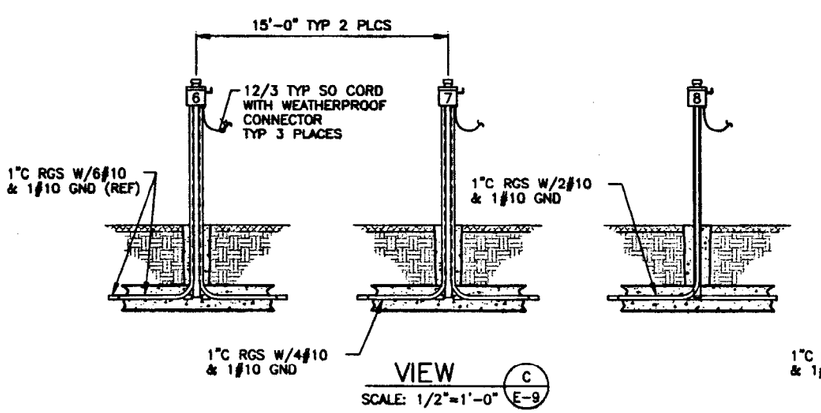

VIEW C E-9
SCALE: 1/2"=1'-0"

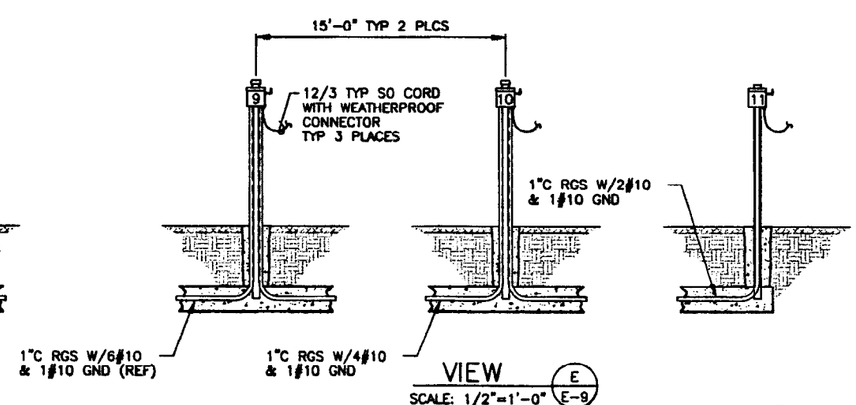

VIEW E E-9
SCALE: 1/2"=1'-0"

NOTES

1. DUCT BANK RED CONCRETE SHALL BE 4000 PSI.
2. PROVIDE 3" MIN CONCRETE COVER OVER REBAR ON NON-FORMED SIDES OF DUCT BANK.
3. CADWELD #2 BARE COPPER GROUND TO #5 REBAR.

PROFESSIONAL ENGINEER REGISTERED STATE OF IDAHO JOHN E. DUGGAN 07/02

FOR DRAWING INDEX SEE DRAWING NO. 520003	SUBCONTRACT NO.	INEEL BATTELLE ENERGY ALLIANCE, LLC
SCALE: 1/2" = 1'-0" / SCALE: 3" = 1'-0"	REQUESTER: S. DAVIES	INTEC STAGING, STORAGE, SIZING AND TREATMENT FACILITY
	DESIGN: J. DUGGAN	
	DRAWN: RICH WATSON	VIEWS, SECTIONS AND DETAIL
	PROJECT NO. 020996	
	SPEC CODE	
DESIGN PHASE: AFC	FOR REVIEW/APPROVAL SIGNATURES SEE DAR NO. 88704	SIZE D; CADD CODE 01MF3; INDEX CODE NUMBER AREA 200, TYPE 0400, CL 10, DWG 090; DWG-520071; REV
SAFETY CATEGORY: LSC	EFFECTIVE DATE: 3/11/2002	SCALE: NOTED; SHEET E-10

Layout Name: 520071 Date: 01/30/02 - 7:31 P.M. ID: MBC
File: 520071.dwg Path: G:\Mbr\SSSTF

REVISIONS		
REV	DESCRIPTION	EFFECTIVE DATE:

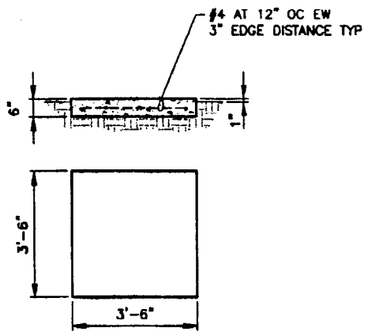

DETAIL (7/E-20)
SCALE: 1/2"=1'-0"

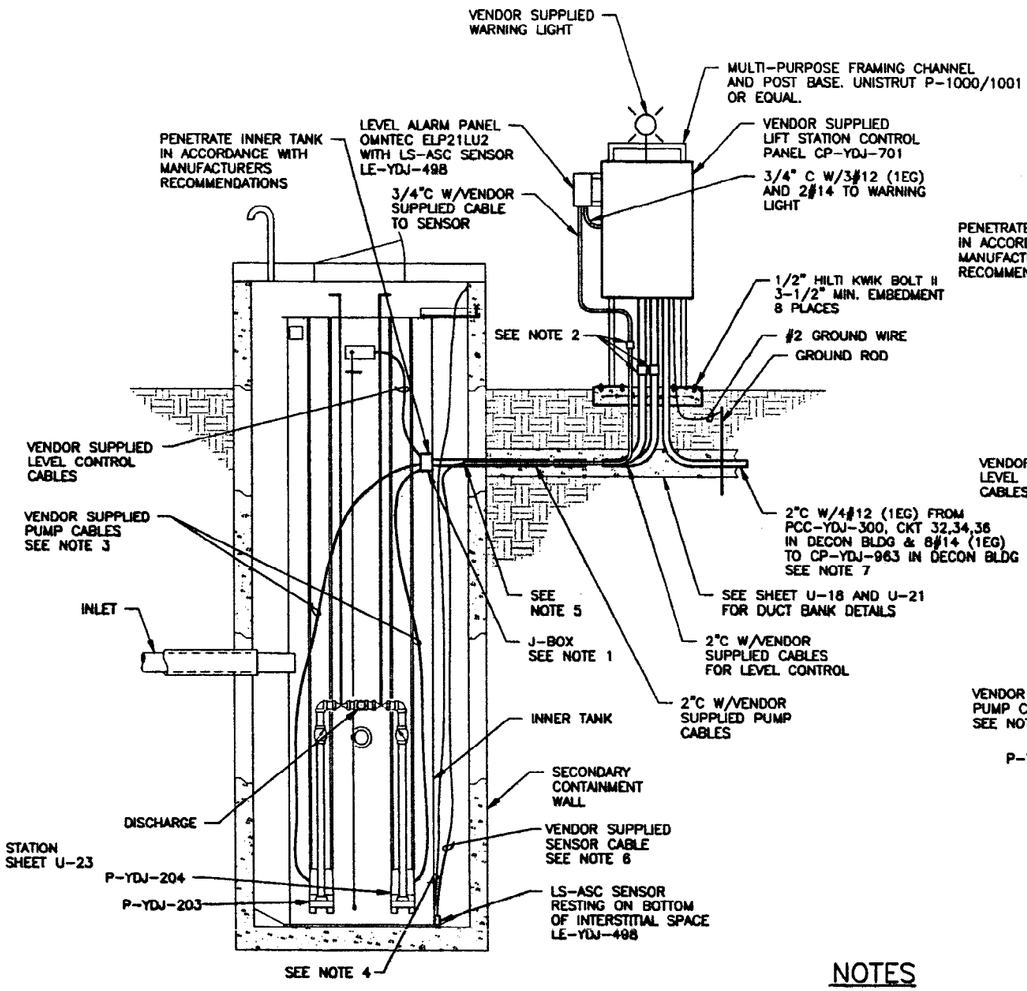

CPP-1688 (DECON BLDG) LIFT STATION

VIEW (L/-)
SCALE: 1/2"=1'-0"

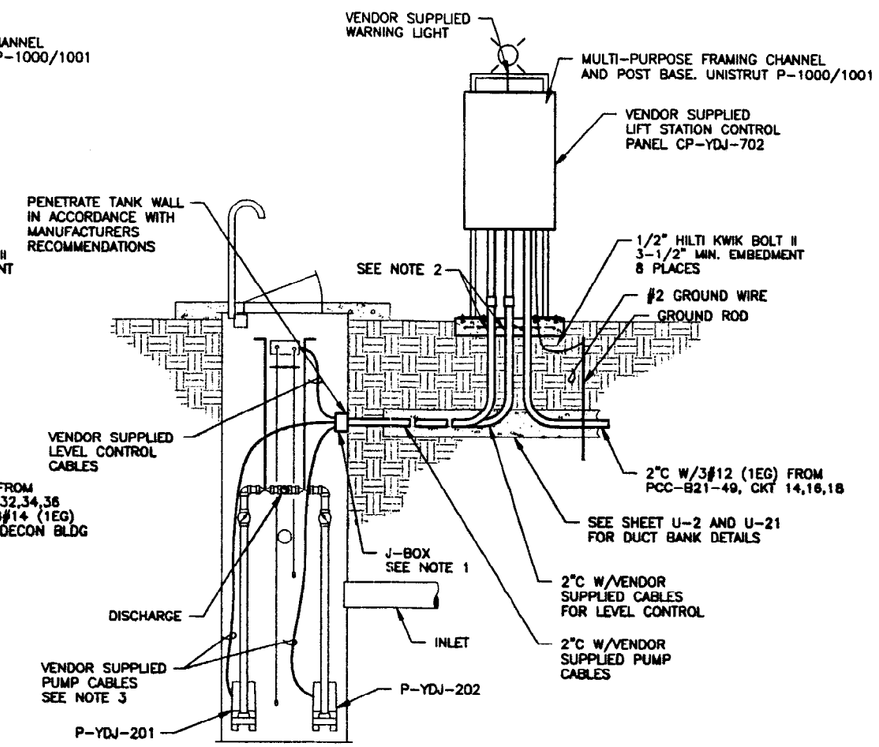

SEWAGE LIFT STATION

VIEW (M/E-20)
SCALE: 1/2"=1'-0"

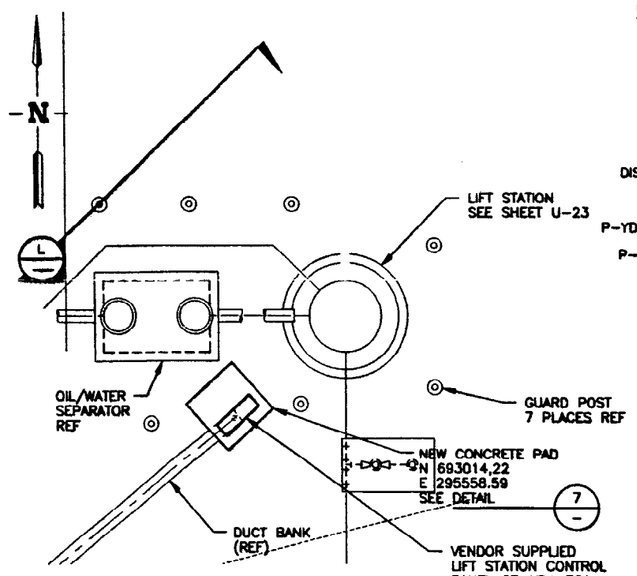

ENLARGED VIEW (A/E-2)
SCALE: 1/4"=1'-0"

NOTES

1. INSTALL EXPLOSION PROOF J-BOX. RUN CABLES INTO BOX WITH EXPLOSION-PROOF CORD CONNECTORS. DO NOT SPLICE CABLES IN BOX, RUN CONTINUOUSLY TO CONTROL PANEL. CONDUIT SIZE MAY BE REDUCED IF CABLING SUPPLIED WITH PUMPS ALLOW. SIZE J-BOX ACCORDINGLY.
2. INSTALL CROUSE-HINDS EYS FITTING W/CHICO X FIBER AND CHICO SEALING COMPOUND OR APPROVED EQUAL.
3. EACH PUMP CABLE CONTAINS 7 CONDUCTORS; 4#10 AND 3#12.
4. INSTALL 3/4" COUPLING ON SENSOR. ATTACH STAINLESS STEEL CABLE TO COUPLING AND TO THE WALL AT THE SECONDARY CONTAINMENT NEAR THE TOP FOR RETRIEVING THE SENSOR.
5. INSTALL CORD CONNECTOR WITH STRAIN RELIEF, SIZED FOR SENSOR CABLE.
6. SPLICE 3 CONDUCTOR #22 SHIELDED SENSOR CABLE USING WATER PROOF SPLICE KIT.

XREF DRAWINGS
520110.dwg

PROFESSIONAL ENGINEER REGISTERED 3/07/02 STATE OF IDAHO JOHN E. DUGGAN

FOR DRAWING INDEX SEE DRAWING NO. 520003	SUBCONTRACT NO.	INEEL BECHTEL BWXT IDAHO, LLC
SCALE: 1/2" = 1'-0" / SCALE: 1/4" = 1'-0"	REQUESTER: S. DAVIES	INTEC STAGING, STORAGE, SIZING AND TREATMENT FACILITY
	DESIGN: J. DUGGAN	ENLARGED VIEW AND DETAIL
	DRAWN: R. WATSON	
	PROJECT NO. 020996	
	SPEC CODE	
DESIGN PHASE: AFC	FOR REVIEW/APPROVAL SIGNATURES SEE DAR NO. 88704	SIZE D · CAGE CODE 01MF3 · INDEX CODE NUMBER AREA 200 TYPE 0400 SI 10 SEQ 090 · DWG- 520072 · REV
SAFETY CATEGORY: LSC	EFFECTIVE DATE: 3/11/2002	SCALE: NOTED · SHEET E-11

FMT-01-REV 3.3
Layout Name: 520072 Date: 01/31/02 - 8:11 P.M. ID: MBC
File: 520072.dwg Path: G:\kbr\SSSTF

REVISIONS		
REV	DESCRIPTION	EFFECTIVE DATE:

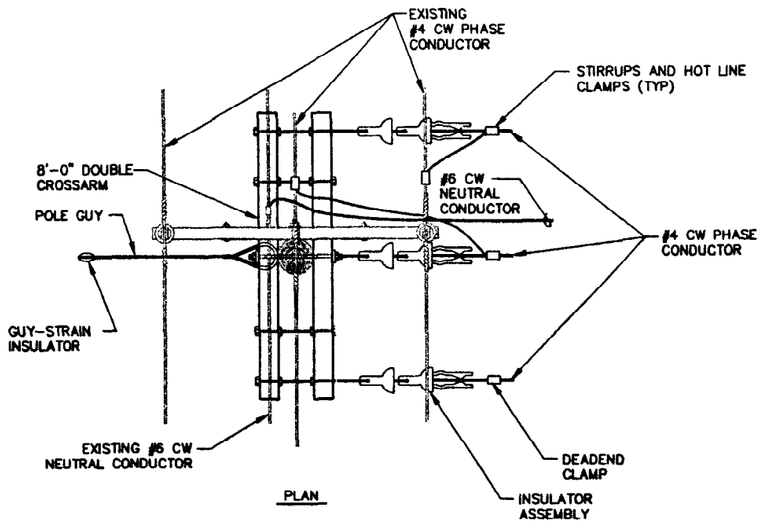

PLAN

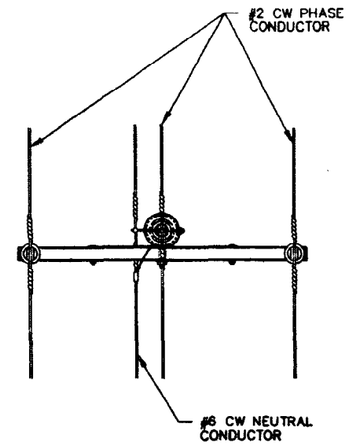

PLAN

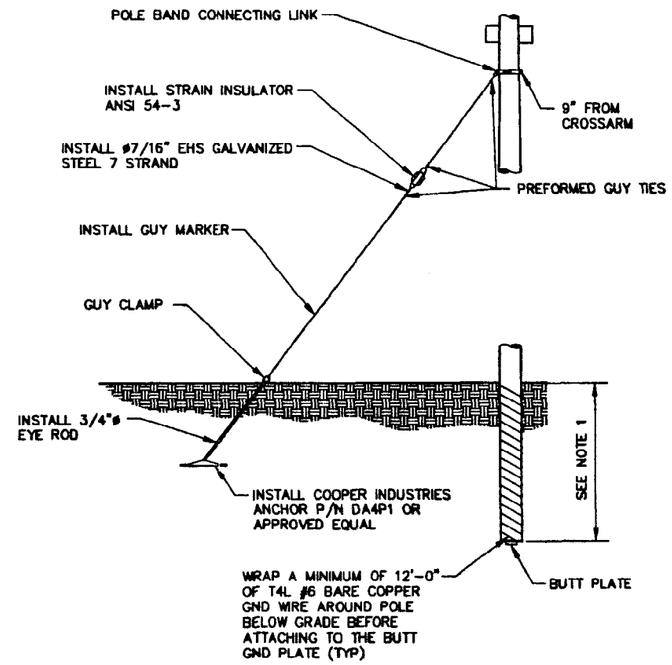

15,000 LB ANCHOR AND POLE INSTALLATION

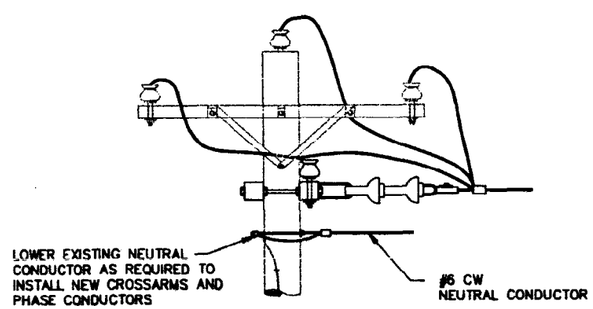

EXISTING POLE 44-43

DETAIL 1/E-2

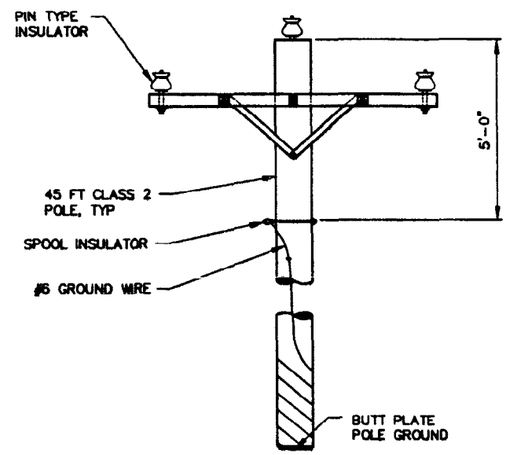

(REA C1)

NEW POLES 44-43-2, 44-43-3 & 44-43-4

DETAIL 3/E-2

NOTES

1. MINIMUM SETTING POLE DEPTH PER RUS/REA STANDARD 804 (TYP).

PROFESSIONAL ENGINEER REGISTERED 3/07/02 STATE OF IDAHO JOHN E. DUGGAN

FOR DRAWING INDEX SEE DRAWING NO. 520003	SUBCONTRACT NO.	INEEL BECHTEL BWXT IDAHO, LLC
SCALE: 1/2" = 1'-0"	REQUESTER: S.A.DAVIES DESIGN: J. DUGGAN DRAWN: M. CHRISTENSEN PROJECT NO. 020996 SPEC CODE	INTEC STAGING, STORAGE, SIZING AND TREATMENT FACILITY POWER POLE AND ANCHOR DETAILS
DESIGN PHASE: AFC	FOR REVIEW/APPROVAL SIGNATURES SEE DAR NO. 88704	SIZE D · CAGE CODE 01MF3 · INDEX CODE NUMBER AREA 200 TYPE 0400 CL 10 DWG 090 · DWG-520073 · REV
SAFETY CATEGORY: LSC	EFFECTIVE DATE: 3/8/2002	SCALE: 1/2"=1'-0" · SHEET E-12

Layout Name: 520073
Date: 01/30/02 - 7:32 P.M.
File: 520073.dwg
Path: G:\Mar\SSSTF

REVISIONS		
REV	DESCRIPTION	EFFECTIVE DATE:

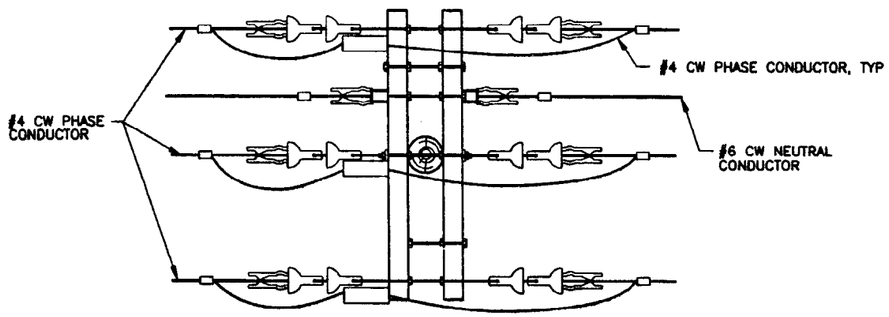

PLAN

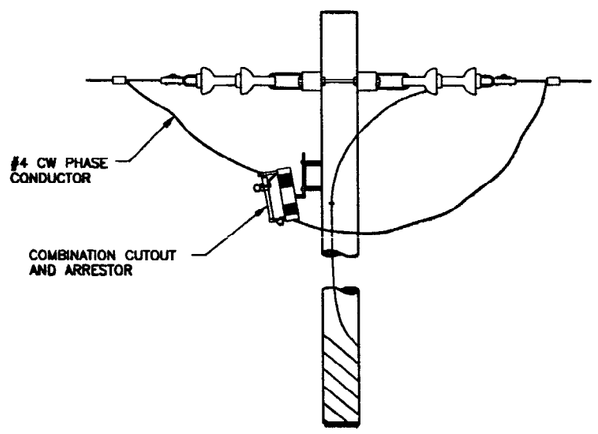

NEW POLE 44-43-1
REA C-8 WITH TAP LINE
FUSE AND DISCONNECTS

DETAIL 2/E-2

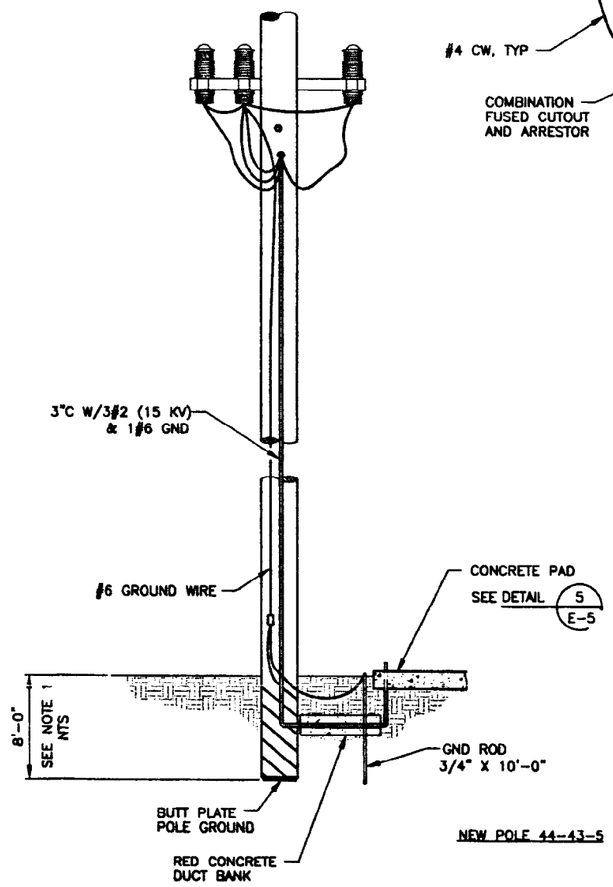

NEW POLE 44-43-5

DETAIL 4/E-2

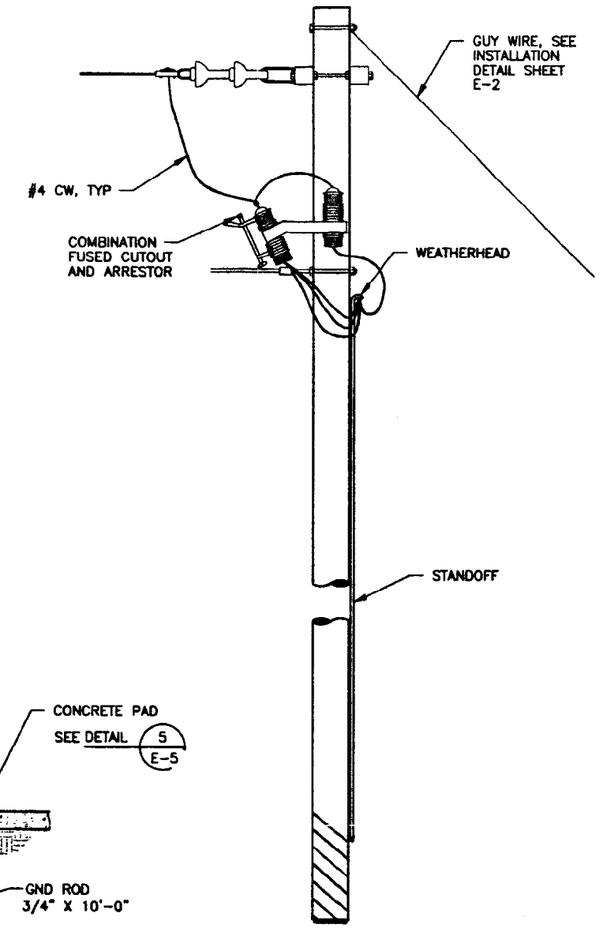

NOTES

1. MINIMUM SETTING POLE DEPTH PER RUS/REA STANDARD 804.

FOR DRAWING INDEX SEE DRAWING NO. 520003	SUBCONTRACT NO.	INEEL
SCALE: 1/2" = 1'-0"	REQUESTER: S.A. DAVIES DESIGN: J. DUGGAN DRAWN: M. CHRISTENSEN PROJECT NO. 020996 SPEC CODE	INTEC STAGING, STORAGE, SIZING AND TREATMENT FACILITY POWER POLE DETAILS
DESIGN PHASE: AFC	FOR REVIEW/APPROVAL SIGNATURES SEE DAR NO. 88704	SIZE D · CAGE CODE 01MF3 · INDEX CLASS NUMBER 38A 1 DBE 4 086 · 200 0400 10 080 · DWG-520074 · REV
SAFETY CATEGORY: LSC	EFFECTIVE DATE: 3/8/2002	SCALE: 1/2"=1'-0" · SHEET E-13

PROFESSIONAL ENGINEER REGISTERED JOHN E. DUGGAN STATE OF IDAHO 3/07/02

Layout Name: 520074
Date: 01/30/02 - 7:33 P.M.
File: 520074.dwg
Path: G:\lab\SSSTF

REVISIONS		
REV	DESCRIPTION	EFFECTIVE DATE:

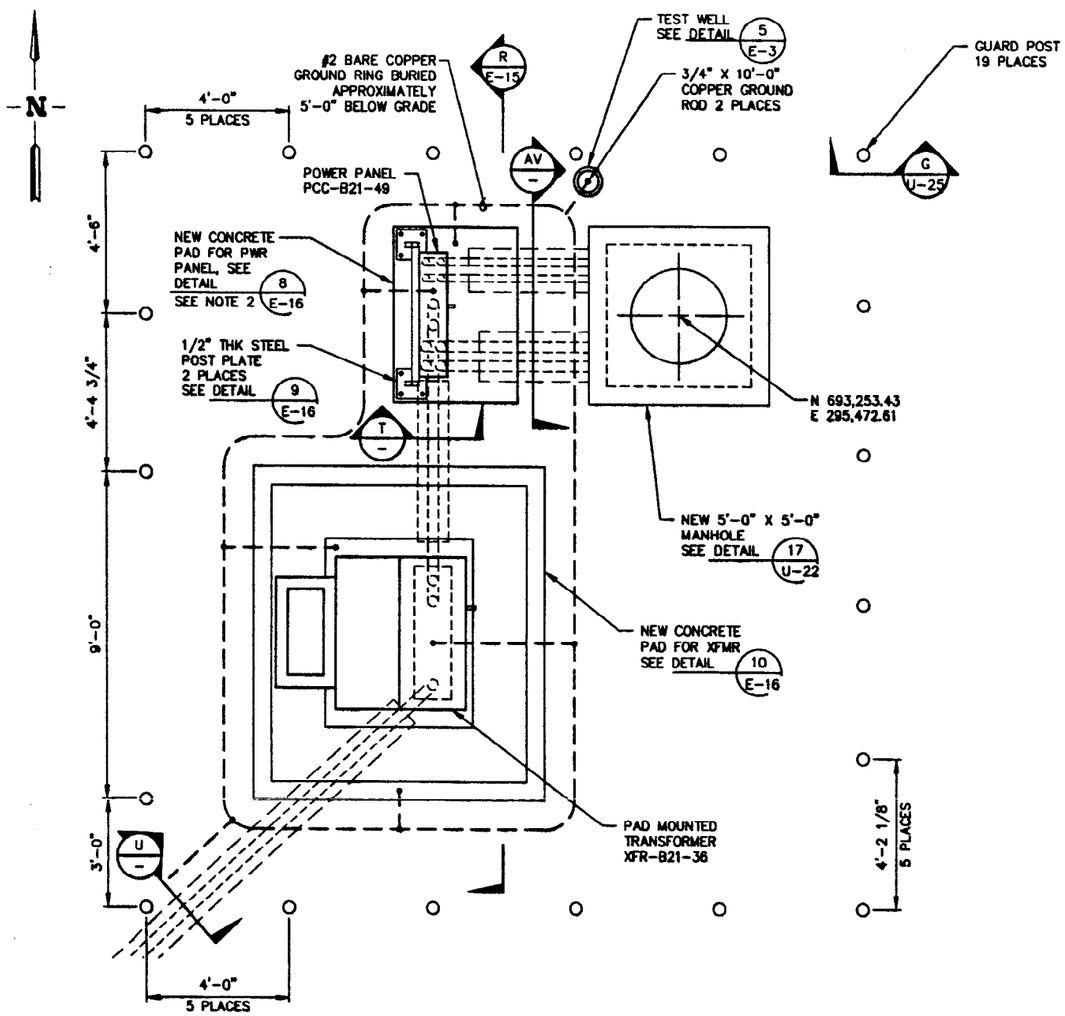

ENLARGED PLAN (AM E-2)
SCALE: 1/2"=1'-0"

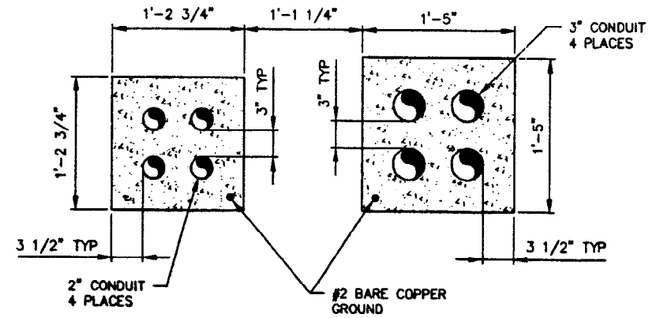

SECTION (AV —)
SCALE: 1 1/2"=1'-0"

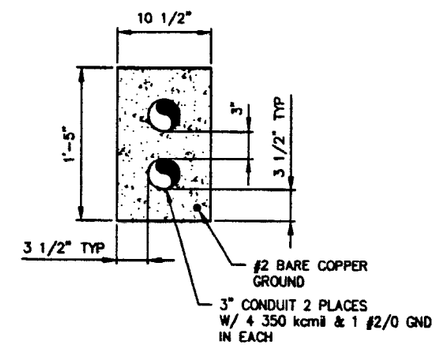

SECTION (T —)
SCALE: 1 1/2"=1'-0"

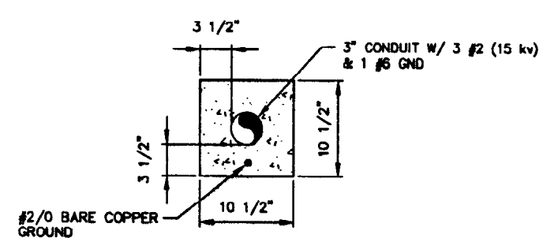

SECTION (U —)
SCALE: 1 1/2"=1'-0"

NOTES

1. ALL CONDUIT SHALL BE RIGID GALVANIZED STEEL (RGS).
2. PLACE PAD AFTER POWER PANEL AND CONDUIT ARE IN PLACE.

XREF DRAWINGS
520110.dwg

FOR DRAWING INDEX SEE DRAWING NO. 520003	S/BCONTRACT NO.	INEEL BATTELLE ENERGY ALLIANCE, LLC
SCALE: 1/2" = 1'-0"	REQUESTER: S.A. DAVIES	INTEC STAGING, STORAGE, SIZING AND TREATMENT FACILITY
SCALE: 1 1/2" = 1'-0"	DESIGN: J DUGGAN	ENLARGED PLAN AND SECTIONS
	DRAWN: RICH WATSON	
	PROJECT NO. 020996	
	SPEC CODE	
DESIGN PHASE: AFC	FOR REVIEW/APPROVAL SIGNATURES SEE DAR NO. 88704	SIZE D; CADE CODE 01MF3; INDEX CODE NUMBER AREA 200, TYPE 0400, D 10, DWG 090; DWG-520075; REV
SAFETY CATEGORY: LSC	EFFECTIVE DATE: 3/26/2002	SCALE: NOTED; SHEET E-14

JOHN E. DUGGAN, STATE OF IDAHO, 3/26/02

REVISIONS		
REV	DESCRIPTION	EFFECTIVE DATE:

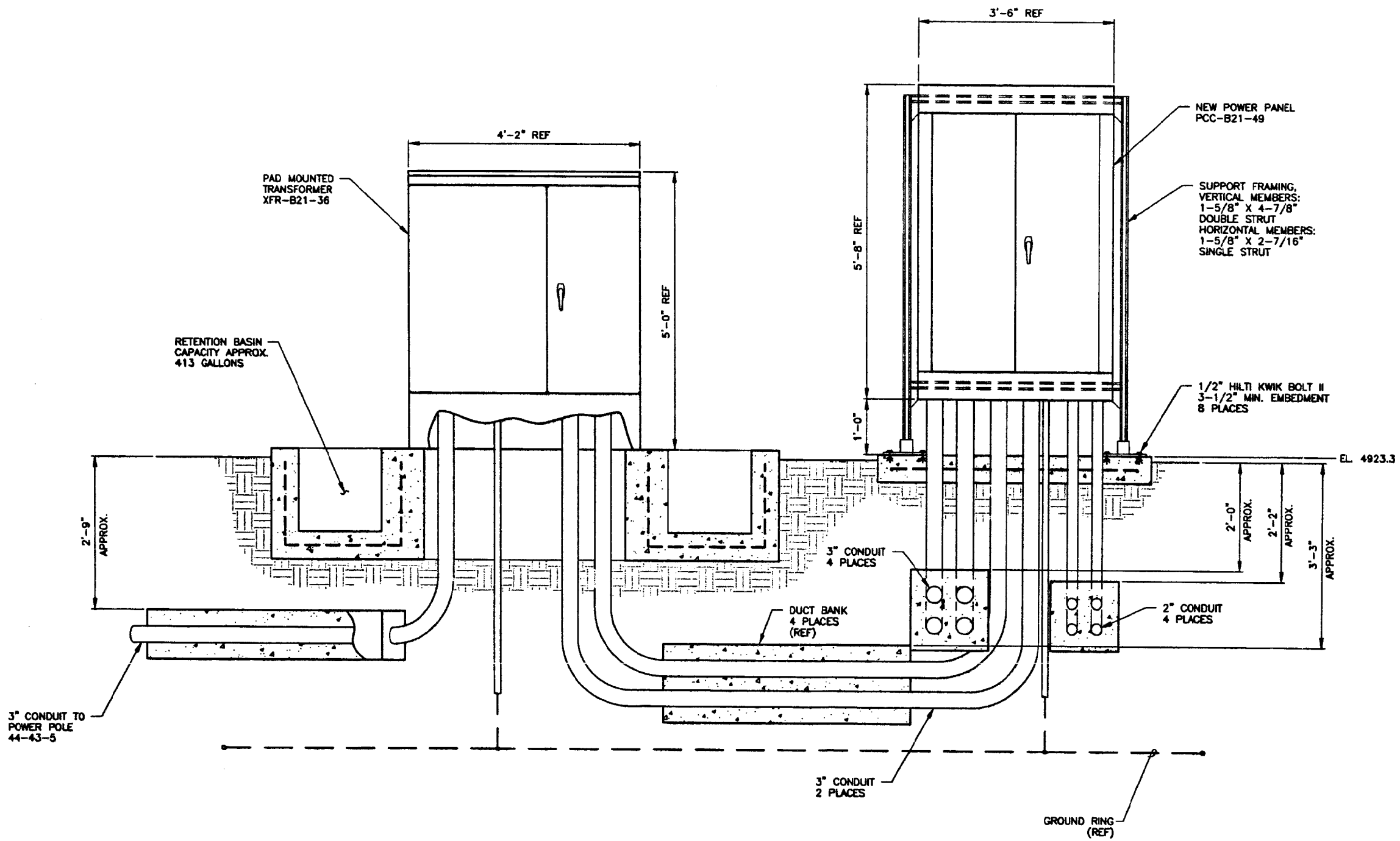

VIEW (R / E-14)
SCALE: 1"=1'-0"

FOR DRAWING INDEX SEE DRAWING NO. 520003	SUBCONTRACT NO.	INEEL BATTELLE ENERGY ALLIANCE, LLC
SCALE: 1" = 1'-0"	REQUESTER: S.A. DAVIES	INTEC STAGING, STORAGE, SIZING AND TREATMENT FACILITY
	DESIGN: J DUGGAN	
	DRAWN: RICH WATSON	POWER PANEL AND TRANSFORMER VIEW
	PROJECT NO. 020996	
	SPEC CODE	
DESIGN PHASE: AFC	FOR REVIEW/APPROVAL SIGNATURES SEE DWG NO. 88704	SIZE D · CAGE CODE 01MF3 · INDEX CODE NUMBER AREA 200 TYPE 0400 Q 10 DISC 090 · DWG- 520076 · REV
SAFETY CATEGORY: LSC	EFFECTIVE DATE: 3/8/2002	SCALE: NOTED · SHEET E-15

PROFESSIONAL ENGINEER — 3/07/02 — STATE OF IDAHO — JOHN E. DUGGAN

Layout Name: 520076
Date: 01/30/02 - 7:36 P.M.
File: 520076.dwg
Path: G:\Ver\SSTT

REVISIONS		
REV	DESCRIPTION	EFFECTIVE DATE:

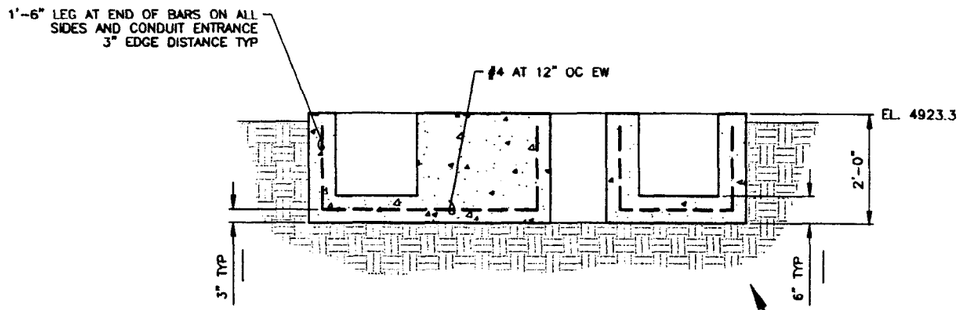

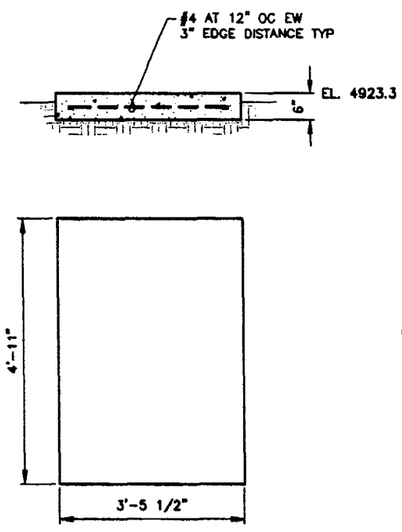

DETAIL 8
SCALE: 3/4"=1'-0" E-14

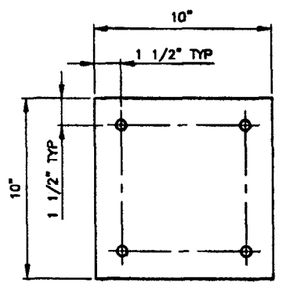

DETAIL 9
SCALE: 3"=1'-0" E-14

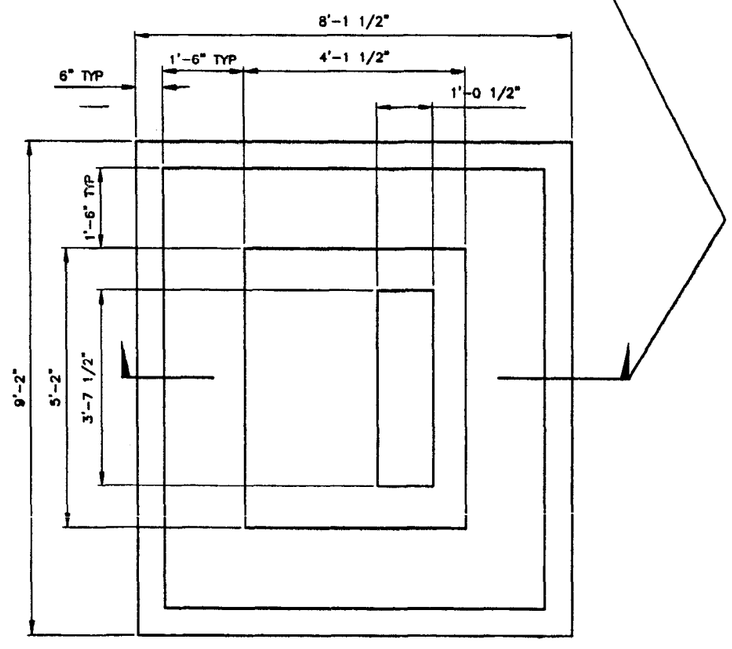

DETAIL 10
SCALE: 3/4"=1'-0" E-14

NOTES

1. CONCRETE PADS MAY BE PRECAST OR CAST IN PLACE.

FOR DRAWING INDEX SEE DRAWING NO. 520003	SUBCONTRACT NO.	INEEL BECHTEL BWXT IDAHO, LLC
SCALE: 3" = 1'-0" / SCALE: 3/4" = 1'-0"	REQUESTER: S.A. DAVIES	INTEC STAGING, STORAGE, SIZING AND TREATMENT FACILITY
	DESIGN: J DUGGAN	
	DRAWN: RICH WATSON	CONCRETE PAD DETAILS
	PROJECT NO. 020996	
	SPEC CODE	
DESIGN PHASE: AFC	FOR REVIEW/APPROVAL SIGNATURES SEE DAR NO. 88704	SIZE D · CAGE CODE 01MF3 · INDEX CODE NUMBER AREA 200 TYP 0400 CL 10 ORG 090 · DWG-520077 REV
SAFETY CATEGORY: LSC	EFFECTIVE DATE: 9/11/2002	SCALE: NOTED · SHEET E-16

PROFESSIONAL ENGINEER REGISTERED NO. 7670 STATE OF IDAHO JOHN E. DUGGAN

File: 520077.dwg
Path: G:\dbr\SSSTF
Layout Name: 520077
Date: 01/30/02 - 7:36 P.M.

REVISIONS		
REV	DESCRIPTION	EFFECTIVE DATE:

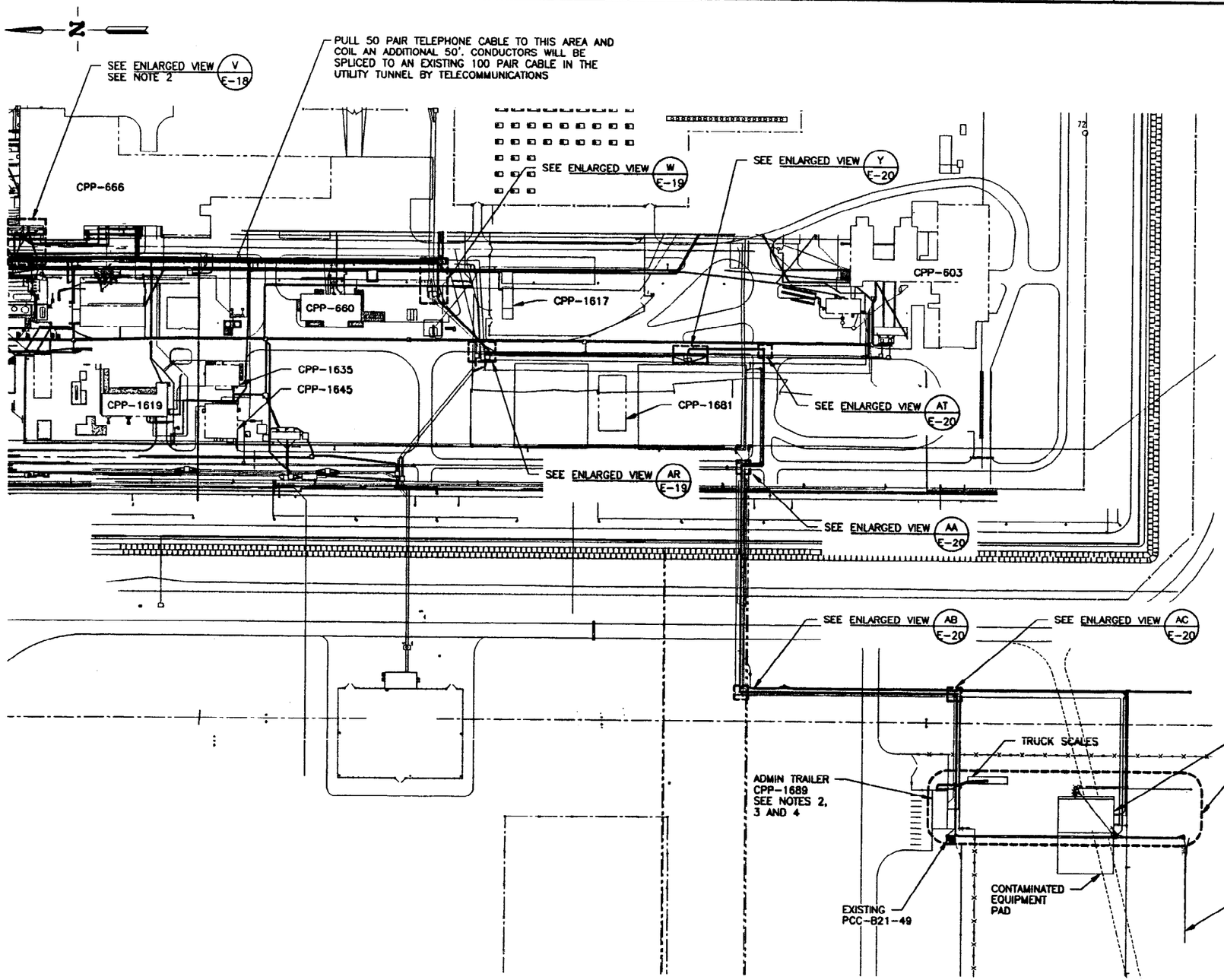

PLOT PLAN

SCALE: 1"=100.0'

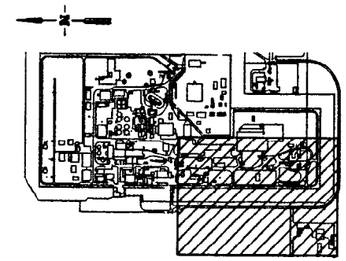

KEY PLAN

NTS

NOTES

1. TOTAL LENGTH OF RUN BETWEEN ADMIN TRAILER AND CPP-666 APPROXIMATELY 2800 FEET.
2. PULL 12 FIBER OPTICAL CABLE TO ROOM 129 IN CPP-666.
3. PULL 50 PAIR TELEPHONE CABLE TO UTILITY TUNNEL AS INDICATED ON DRAWING.
4. CONDUCTORS TO HAVE 20' COILED IN CPP-666 RM 129 AND ADMIN TRAILER COMMUNICATION ROOM.
5. ALL CONDUCTORS TO BE TERMINATED BY CONTRACTOR'S TELECOMMUNICATIONS GROUP.

XREF DRAWINGS
520110.dwg

FOR DRAWING INDEX SEE DRAWING NO. 520003	SUBCONTRACT NO.	INEEL BECHTEL BWXT IDAHO, LLC
SCALE: 1" = 100.0'	REQUESTOR: S. DAVIES DESIGN: T. HIPP DRAWN: R. WATSON	INTEC STAGING, STORAGE, SIZING AND TREATMENT FACILITY
	PROJECT NO. 020996 SPEC CODE	PLOT PLAN
DESIGN PHASE: AFC	FOR REVIEW/APPROVAL SIGNATURES SEE DAR NO. 88704	SIZE D · CAGE CODE 01MF3 · INDEX CODE NUMBER AREA 200 TYPE 0400 Q 10 ORG 090 · DWG-520078 · REV
SAFETY CATEGORY: LSC	EFFECTIVE DATE: 9/11/2008	SCALE: NOTED · SHEET E-17

INDEX CODE NUMBER: AREA 200 TYPE 0900 Q 06 ORG 090

PROFESSIONAL ENGINEER SIGNATURE 9778 STATE OF IDAHO THOMAS M. HIPP 3/4/02

Layout Name: 520078 Date: 01/30/02 - 7:39 P.M. ID: MBC

File: 520078.dwg Path: G:\sbr\SSSTF

PMT-01-REV 3.3

REVISIONS		
REV	DESCRIPTION	EFFECTIVE DATE:

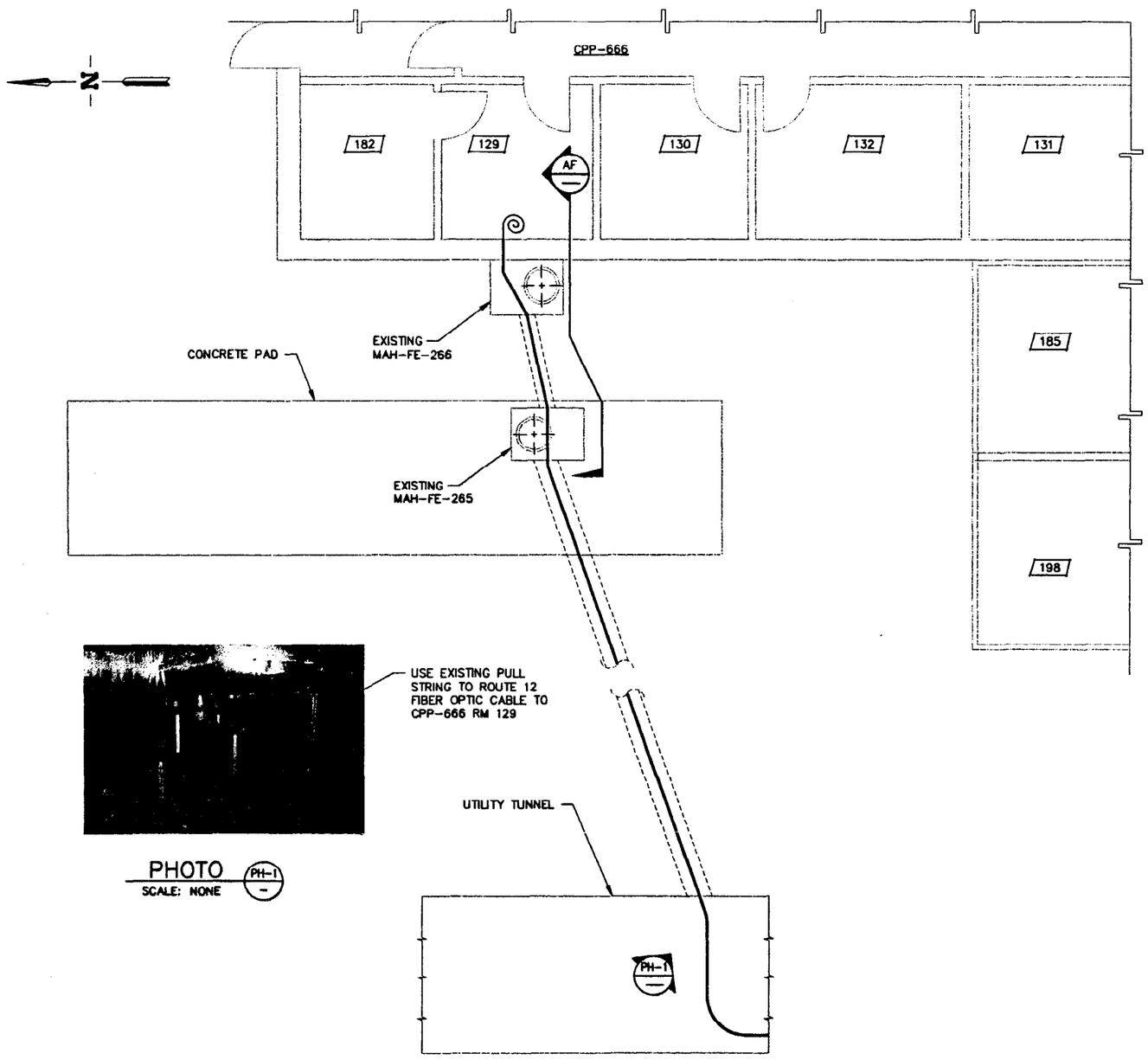

PHOTO (PH-1)
SCALE: NONE

ENLARGED VIEW (V / E-17)
SCALE: 1/4"=1'-0"

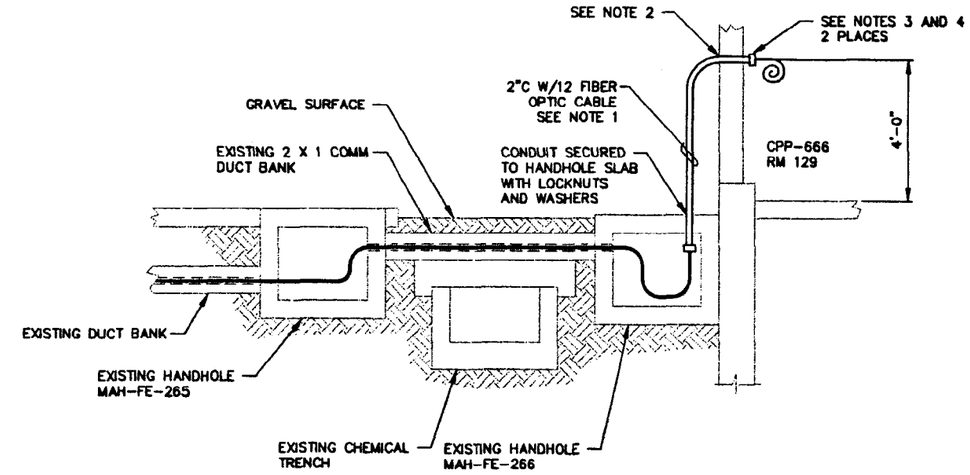

SECTION (AF / –)
SCALE: 1/2"=1'-0"

NOTES

1. EXACT LOCATION OF CONDUIT PENETRATIONS TO BE COORDINATED WITH TELECOMMUNICATIONS AT TIME OF INSTALLATION.
2. DRILL WALL FOR 2" CONDUIT AND SEAL WITH RTV SEALANT.
3. INSTALL INSULATING BUSHING AT EACH END OF CONDUIT. SEAL CONDUIT OPEN ENDS WITH DUCT SEALANT.
4. COIL AN ADDITIONAL 20'-0" OF FIBER OPTIC CABLE INSIDE RM 129, FOR TERMINATION BY OTHERS.

PROFESSIONAL ENGINEER REGISTERED No. M. 8778 STATE OF IDAHO THOMAS M. HIPP 3/04/02

FOR DRAWING INDEX SEE DRAWING NO. 520003	SUBCONTRACT NO.	INEEL BATTELLE ENERGY ALLIANCE, LLC
SCALE: 1/4" = 1'-0" / SCALE: 1/2" = 1'-0"	REQUESTER: S. DAVIES	INTEC STAGING, STORAGE, SIZING AND TREATMENT FACILITY FIBER AND PHONE CABLE ROUTING ENLARGED VIEW, SECTION AND PHOTO
	DESIGN: T. HIPP	
	DRAWN: R. WATSON	
	PROJECT NO. 020996	
	SPEC CODE	
DESIGN PHASE: AFC	FOR REVIEW/APPROVAL SIGNATURES SEE DAR NO. 55704	SIZE D · CAGE CODE 01MF3 · INDEX CODE NUMBER AREA 200 TYPE 0900 CL 06 ORG 090 · DWG- 520079 · REV
SAFETY CATEGORY: LSC	EFFECTIVE DATE: 3/11/02	SCALE: NOTED · SHEET E-18

INDEX CODE NUMBER: AREA 200 TYPE 0666 CL 06 ORG 090

File: 520079.dwg
Path: G:\kb\SSSTF
Layout Name: 520079
Date: 01/30/02 – 7:38 P.M.

REVISIONS		
REV	DESCRIPTION	EFFECTIVE DATE:

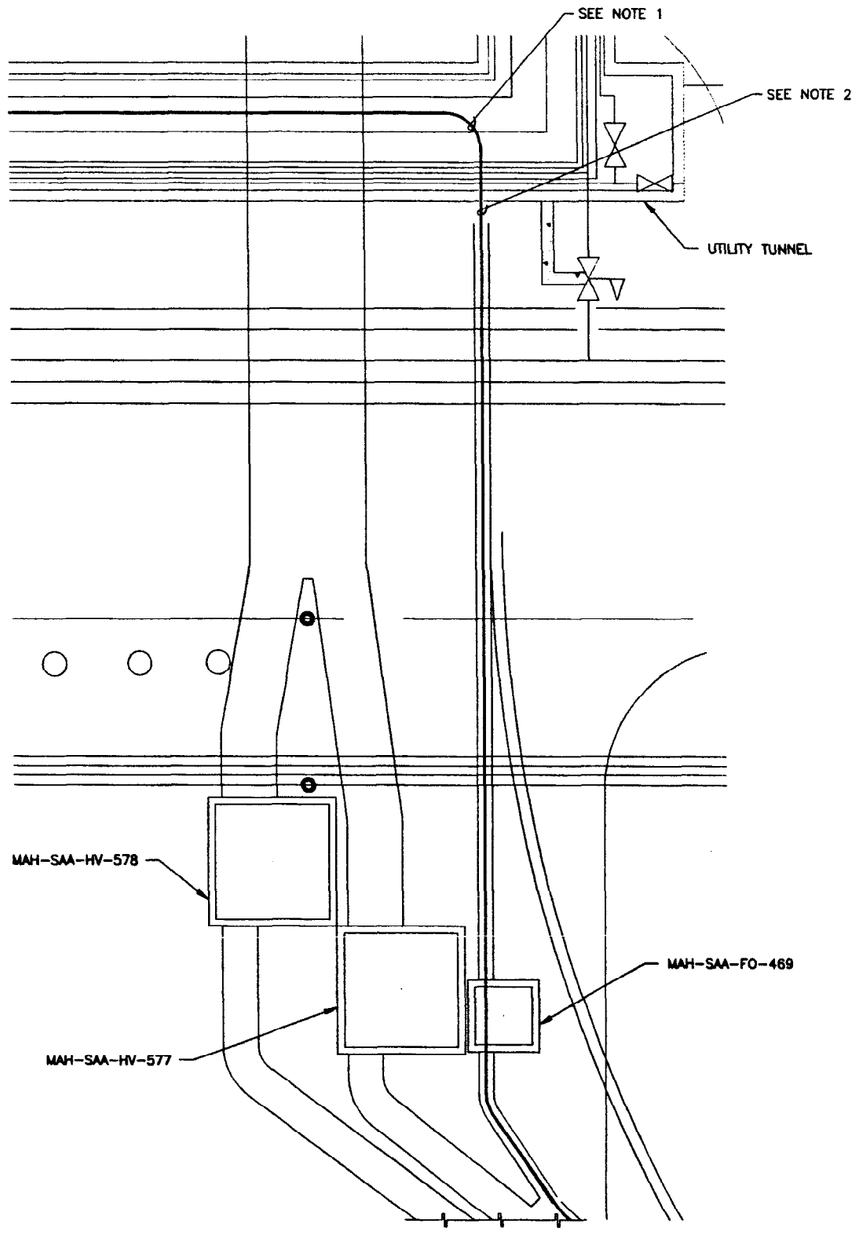

ENLARGED VIEW (W / E-17)
SCALE: 1"=5.0'

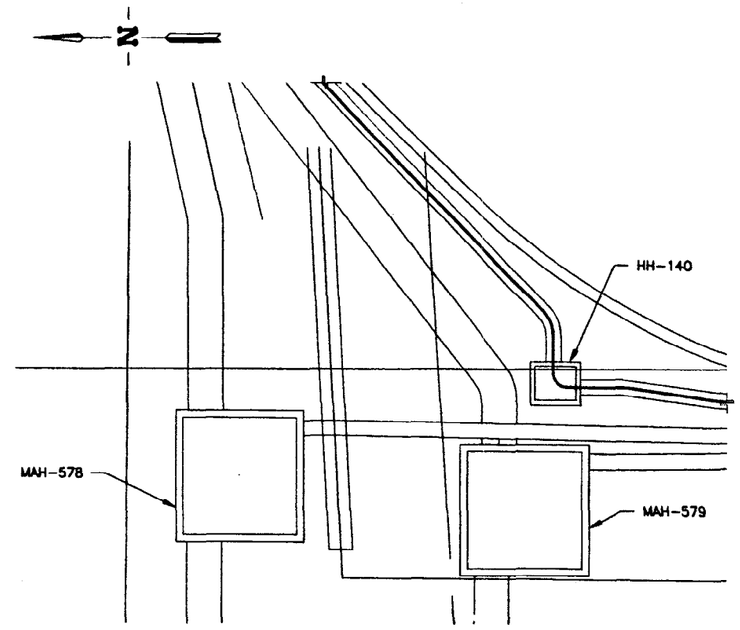

ENLARGED VIEW (AR / E-17)
SCALE: 1"=5.0'

NOTES

1. THE TELEPHONE AND FIBER CABLES WILL BE ROUTED THROUGH THE LOWER CABLE TRAY ON THE WEST WALL OF THE UTILITY TUNNEL.
2. FINAL SELECTION OF DUCT TO BE USED WILL BE MADE AT THE TIME OF INSTALLATION BY BOTH THE CONTRACTOR AND THE SUBCONTRACTOR.

XREF DRAWINGS
520110.dwg

PROFESSIONAL ENGINEER REGISTERED 8779 3/8/02 STATE OF IDAHO THOMAS M. HIPP

FOR DRAWING INDEX SEE DRAWING NO. 520003	SUBCONTRACT NO.	INEEL BECHTEL BWXT IDAHO, LLC
SCALE: 1" = 5.0'	REQUESTER: S. DAVIES DESIGN: T. HIPP DRAWN: R. WATSON PROJECT NO. 020996 SPEC CODE	INTEC STAGING, STORAGE, SIZING AND TREATMENT FACILITY
DESIGN PHASE: AFC	FOR REVIEW/APPROVAL SIGNATURES SEE DAR NO. 88704	FIBER AND PHONE CABLE ROUTING ENLARGED VIEWS
SAFETY CATEGORY: LSC	EFFECTIVE DATE: 3/11/02	SIZE D · CAGE CODE 01MF3 · INDEX CODE NUMBER AREA 200 TYPE 0900 CL 06 ORG 090 · DWG-520080 · REV
		SCALE: NOTED · SHEET E-19

File: 020996-E19.dwg
Path: P:\AbrVSSTF
Layout Name: E-19
Date: 11/28/01 - 10:35 A.M.
ID: LAWRJA

REVISIONS		
REV	DESCRIPTION	EFFECTIVE DATE:

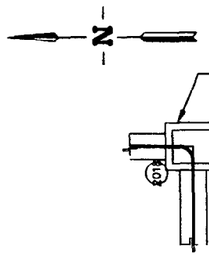

ENLARGED VIEW (AT / E-17)
SCALE: 1"=5.0'

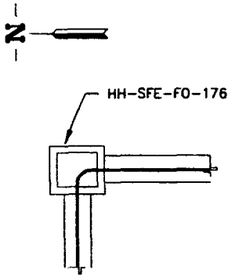

ENLARGED VIEW (AA / E-17)
SCALE: 1"=5.0'

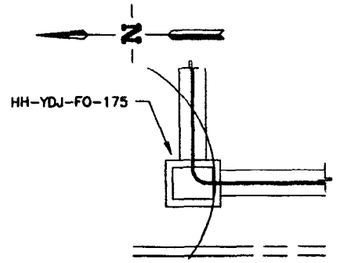

ENLARGED VIEW (AB / E-17)
SCALE: 1"=5.0'

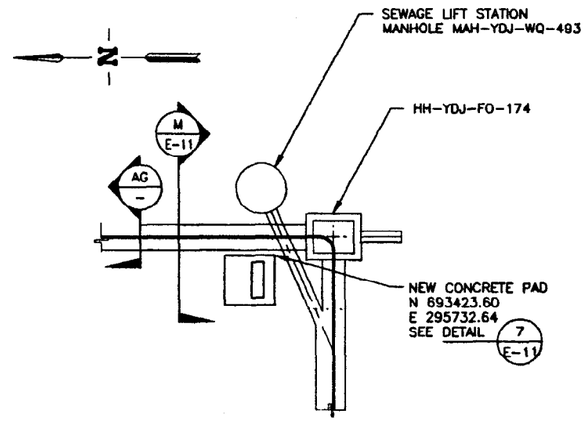

ENLARGED VIEW (AC / E-17)
SCALE: 1"=5.0'

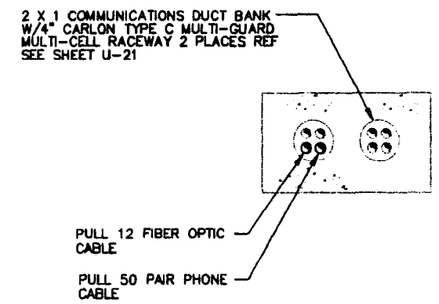

SECTION (AG / –)
SCALE: 1 1/2"=1'-0"

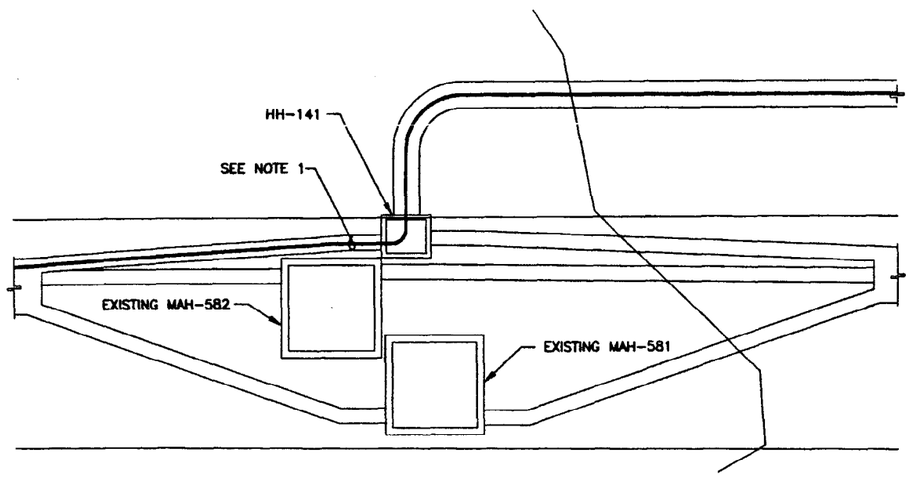

ENLARGED VIEW (Y / E-17)
SCALE: 1"=5.0'

NOTES

1. SELECTION OF DUCT IN EXISTING DUCT BANK WILL BE MADE AT THE TIME OF THE INSTALLATION WITH THE CONCURRENCE OF THE CONTRACTOR. THIS DUCT WILL BE UTILIZED FROM HH-141 TO THE UTILITY TUNNEL.

XREF DRAWINGS
520110.dwg

PROFESSIONAL ENGINEER REGISTERED 9778 STATE OF IDAHO THOMAS M. HIPP 3/08/02

FOR DRAWING INDEX SEE DRAWING NO. 520003	SUBCONTRACT NO.	INEEL
SCALE: 1 1/2" = 1'-0" / SCALE: 1" = 5.0'	REQUESTER: S. DAVIES DESIGN: T. HIPP DRAWN: R. WATSON	INTEC STAGING, STORAGE, SIZING AND TREATMENT FACILITY
	PROJECT NO. 020996 SPEC CODE	FIBER AND PHONE CABLE ROUTING ENLARGED VIEWS AND SECTION
DESIGN PHASE: AFC	FOR REVIEW/APPROVAL SIGNATURES SEE DAR NO. 88704	SIZE D · CAGE CODE 01MF3 · INDEX CODE NUMBER AREA 200 TYPE 0900 LA 06 ORIG 090 · DWG-520081 · REV
SAFETY CATEGORY: LSC	EFFECTIVE DATE: 3/8/02	SCALE: NOTED · SHEET E-20

File: 520081.dwg
Path: G:\Var\SSSTF
Layout Name: 520081
Date: 01/30/02 - 7:40 P.M.
ID: MBC

REVISIONS		
REV	DESCRIPTION	EFFECTIVE DATE:

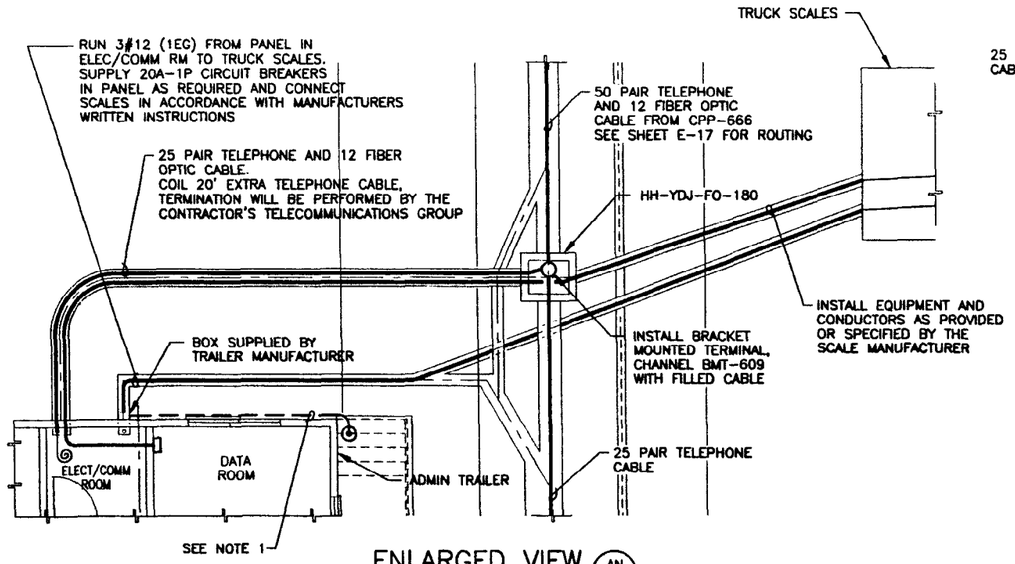

ENLARGED VIEW (AN/–)
SCALE: 1"=5.0'

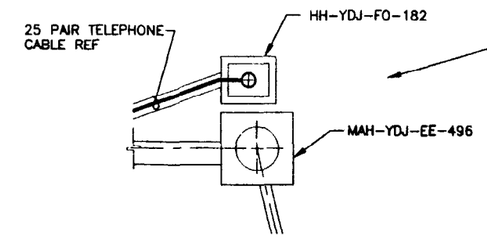

ENLARGED VIEW (AF/–)
SCALE: 1"=5.0'

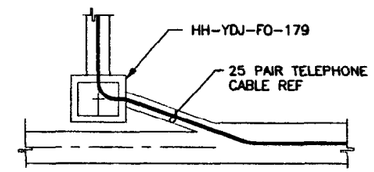

ENLARGED VIEW (AG/–)
SCALE: 1"=5.0'

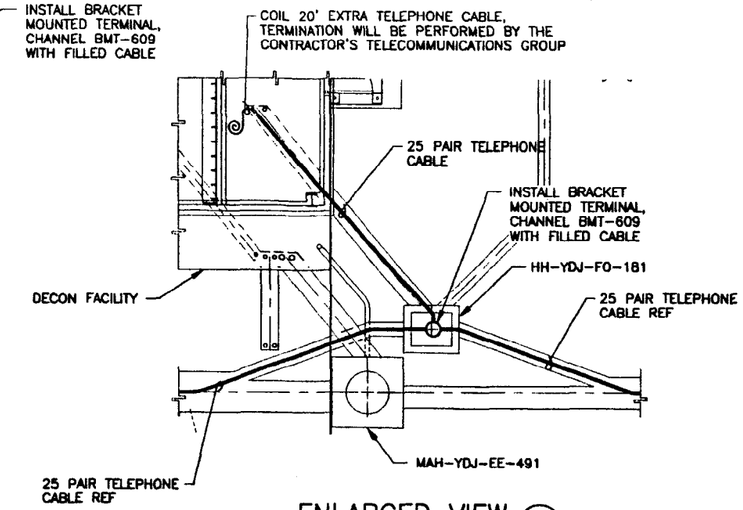

ENLARGED VIEW (AH/–)
SCALE: 1"=5.0'

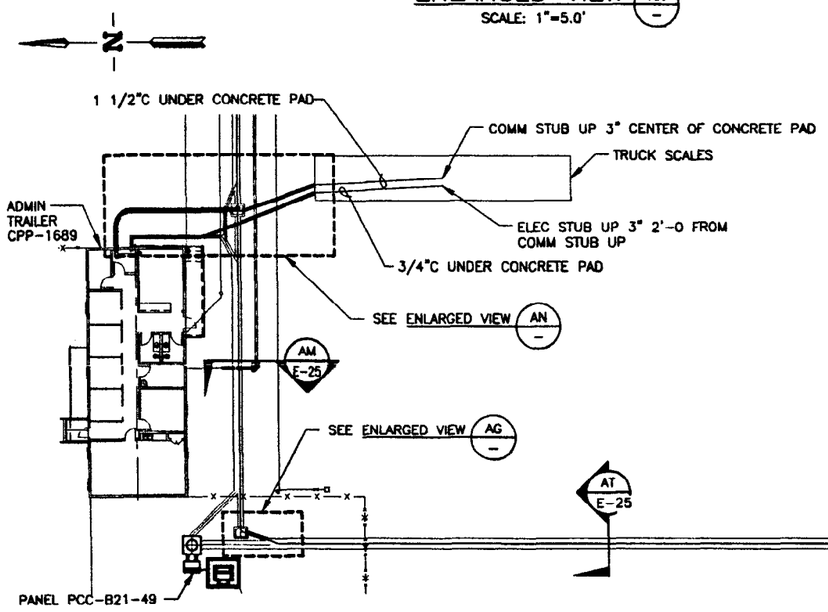

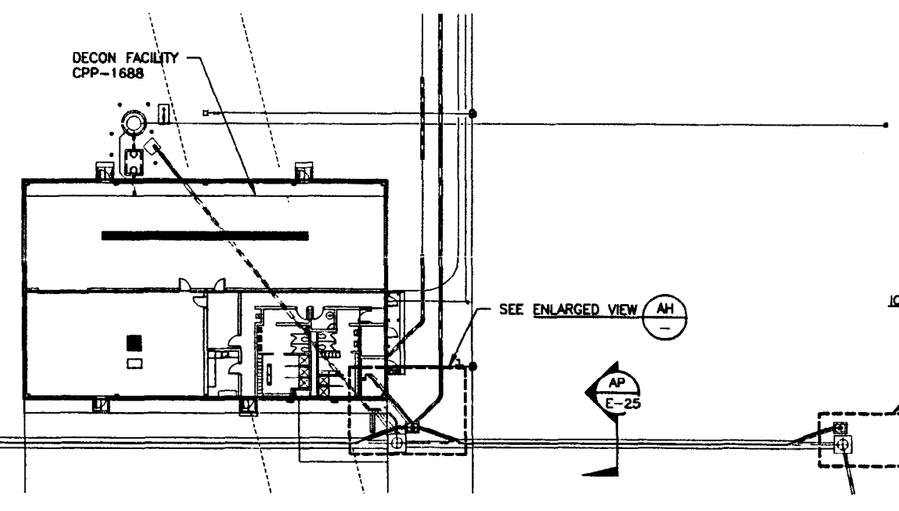

ENLARGED PLAN (AE/E-17)
SCALE: 1"=20.0'

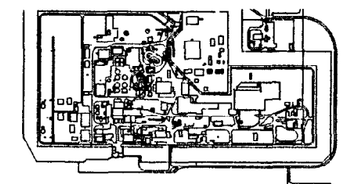

KEY PLAN
SCALE: NONE

NOTES

1. RUN #2/0 BARE COPPER GROUND FROM GROUND ROD TO GROUND BUS IN THE ADMIN TRAILER, EXTEND #2/0 BARE COPPER GROUND FROM DUCT BANK TO GROUND BUS. BOND FIRE WATER MAIN AND POTABLE WATER MAIN TO GROUND BUS.

XREF DRAWINGS
520110.dwg
520111.dwg
520112.dwg

PROFESSIONAL ENGINEER THOMAS M. HIPP STATE OF IDAHO

INDEX CODE NUMBER			
AREA	TYPE	Q	ORG
200	090	06	090

FOR DRAWING INDEX SEE DRAWING NO. 520003

SCALE: 1" = 5.0'
SCALE: 1" = 20.0'

DESIGN PHASE: AFC
SAFETY CATEGORY: LSC

SUBCONTRACT NO.
REQUESTOR: S. DAVIES
DESIGN: T. HIPP
DRAWN: R. WATSON
PROJECT NO. 020996
SPEC CODE
FOR REVIEW/APPROVAL SIGNATURES SEE DAR NO. 88704
EFFECTIVE DATE: 3/11/2002

INEEL BECHTEL BWXT IDAHO, LLC

INTEC
STAGING, STORAGE, SIZING AND TREATMENT FACILITY

ENLARGED PLAN AND VIEWS

SIZE	CADE CODE	INDEX CODE NUMBER				DWG-	REV
		AREA	TYPE	Q	ORG		
D	01MF3	200	0400	10	090	520082	

SCALE: NOTED
SHEET E-21

FMT-01-REV 3.3
ID: MISC
Layout Name: 520082
Date: 01/31/02 - 5:13 P.M.
File: 520082.dwg
Path: G:\kbr\SSSTF

FMT-01-REV 3.3

82

REVISIONS		
REV	DESCRIPTION	EFFECTIVE DATE

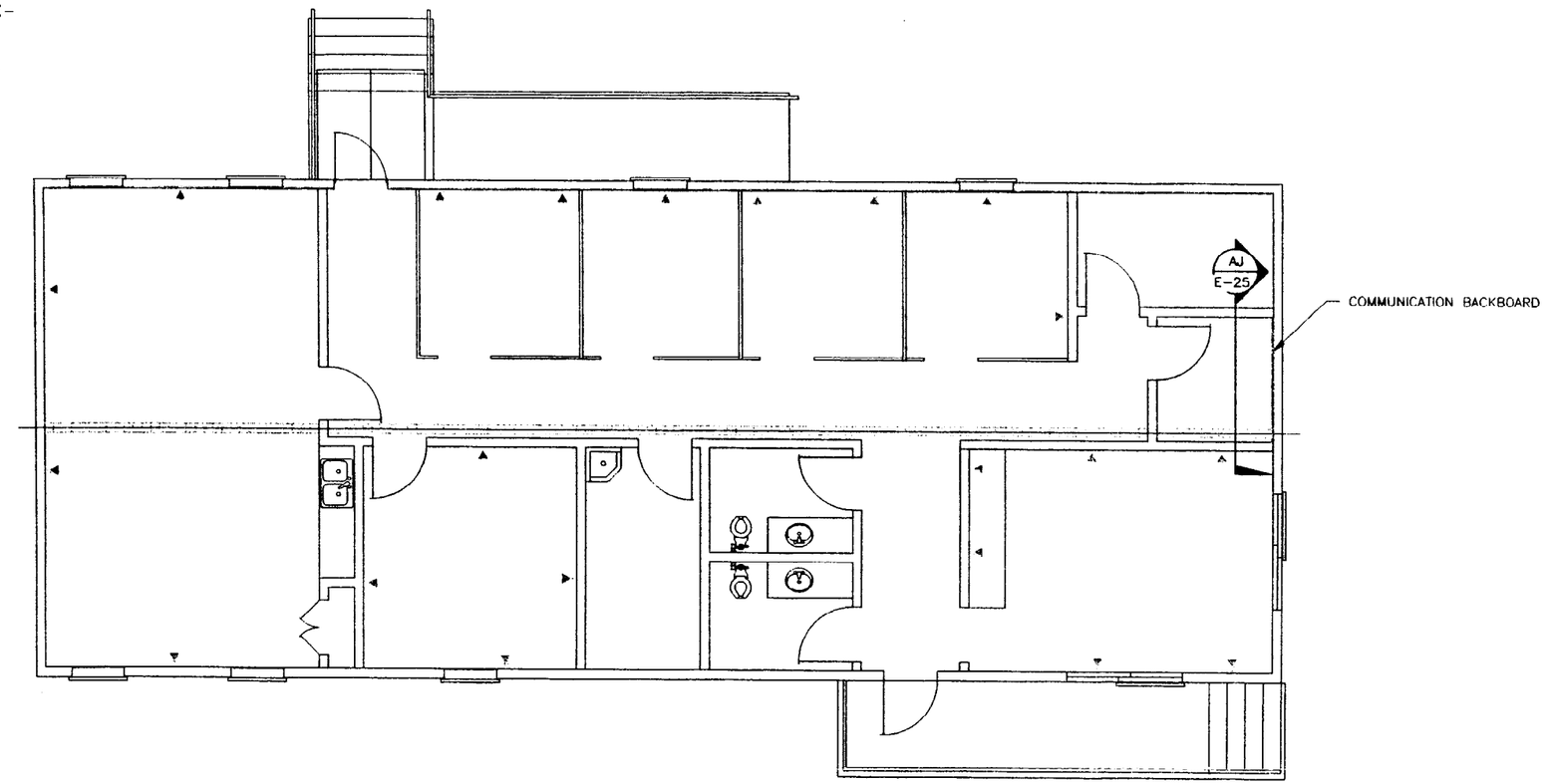

ADMIN BLDG VOICE/DATA FLOOR PLAN

SCALE: 1/4"=1'-0"

LEGEND

VOICE/DATA/DATA OUTLET

CABLE TRAY ABOVE SUSPENDED CEILING

NOTES

1. ALL VOICE/DATA EQUIPMENT IN THE ADMIN BLDG TO BE INSTALLED BY THE TRAILER MANUFACTURER.

XREF DRAWINGS
520111.dwg

PROFESSIONAL ENGINEER REGISTERED 6779 STATE OF IDAHO THOMAS M. HIPP

FOR DRAWING INDEX SEE DRAWING NO. 520003	SUBCONTRACT NO.	INEEL
SCALE: 1/4" = 1'-0"	REQUESTER: LEE DAVIDSON DESIGN: T. HIPP DRAWN: N.L. ROHRBAUGH/R. WATSON PROJECT NO. 020996 SPEC CODE	INTEC STAGING, STORAGE, SIZING AND TREATMENT FACILITY VOICE/DATA/DATA OUTLET FLOOR PLAN
DESIGN PHASE: AFC	FOR REVIEW/APPROVAL SIGNATURES SEE DAR NO. 88704	SIZE D · CAGE CODE 01MF3 · INDEX CODE NUMBER AREA 200 · TYPE 1689 · Q 06 · SEQ 090 · DWG-520083 · REV
QUALITY LEVEL: LSC	EFFECTIVE DATE: 3/14/2002	SCALE: NOTED · SHEET E-22

REVISIONS		
REV	DESCRIPTION	EFFECTIVE DATE:

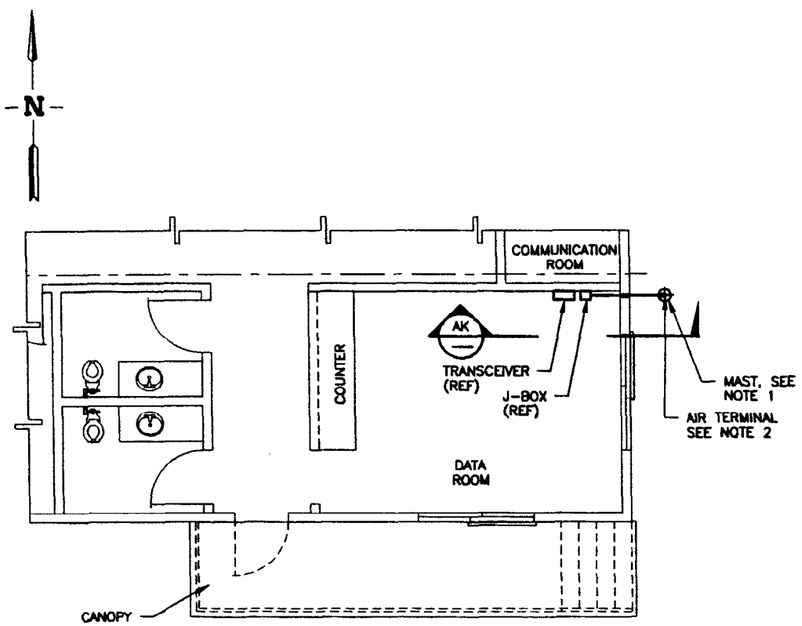

ENLARGED PLAN

SCALE: 1/4"=1'-0"

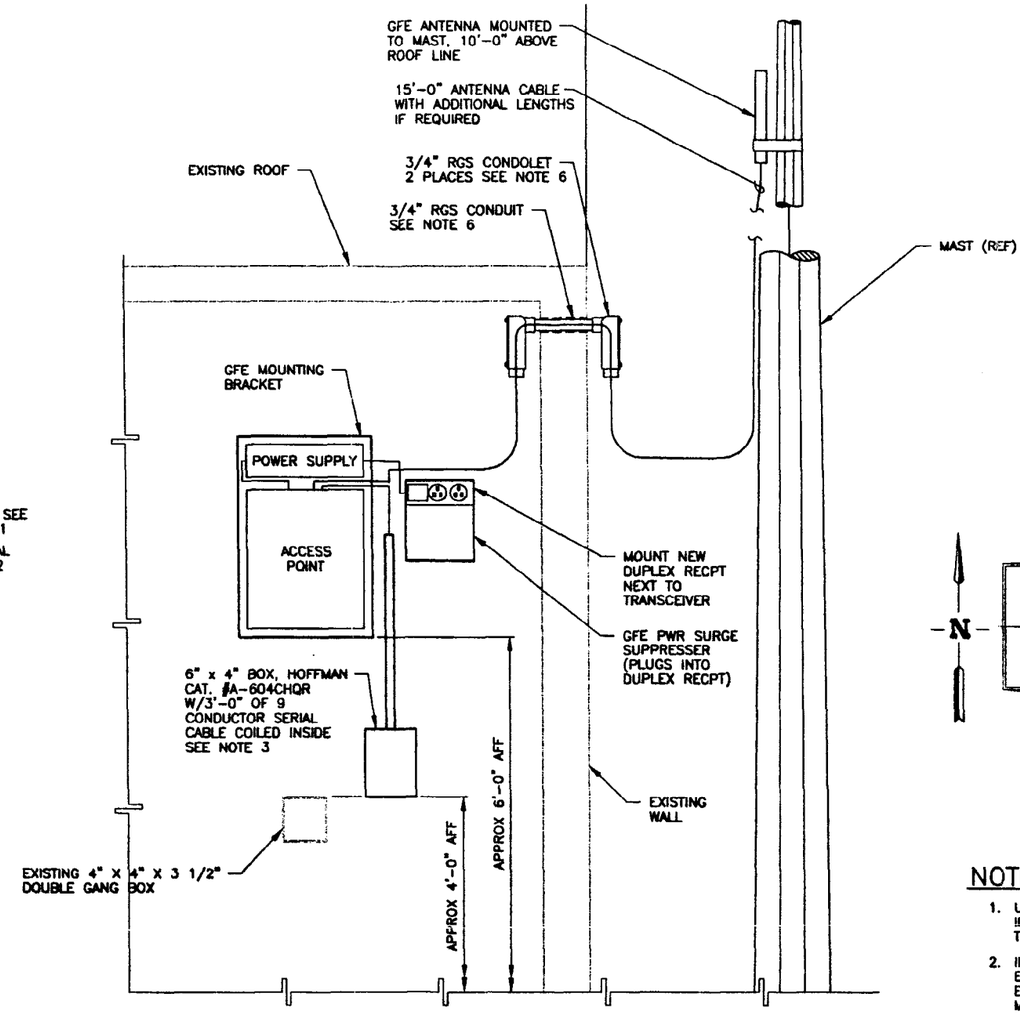

VIEW (AK)

SCALE: NONE

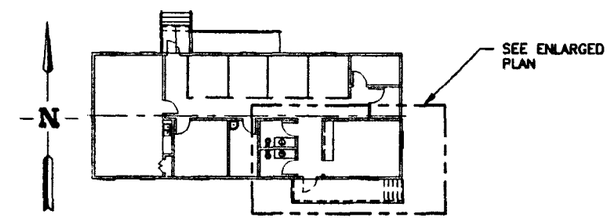

CPP-1689 KEY PLAN

SCALE: NONE

NOTES

1. USE 30'-0", ANSI 05.1 CLASS 5, TREATED POLE. POLE IS TO BE INSTALLED PER REA BULLETIN 160-2. EXACT MAST LOCATION TO BE DETERMINED AT TIME OF INSTALLATION.
2. INSTALL A LIGHTNING PROTECTION SYSTEM ON MAST USING EQUIPMENT IDENTIFIED IN THE LIGHTNING PROTECTION SYSTEM EQUIPMENT SCHEDULE. INSTALL ALL ITEMS IN ACCORDANCE WITH MANUFACTURERS INSTRUCTIONS.
3. 9 CONDUCTOR SERIAL CABLE SHALL BE A BELDEN 9934 COMPUTER CABLE. COIL 3'-0" OF CABLE EACH END FOR TERMINATION BY CONTRACTOR.
4. CONNECT GROUND FROM ANTENNA TO BUILDING GROUND.
5. LABEL CONDUITS "WIRELESS COMMUNICATIONS".
6. SEAL OPENINGS BETWEEN CONDUCTOR AND CONDUIT AND BETWEEN CONDUIT AND WALL WITH SILICONE SEALANT.

LIGHTNING PROTECTION EQUIPMENT SCHEDULE

DESCRIPTION	MANUFACTURER	CATALOG NO.	QTY REQD
3/8" x 12" TAPERED TIP COPPER AIR TERMINAL	HARGER	3812CUAT	1
29x16 ROPELAY CLASS 1 CONDUCTOR, 100' REEL	HARGER	29-100	1
3/8" VERTICAL BASE CONNECTOR	HARGER	157	1
CABLE TO ROUND CONNECTOR (1 BOLT PARALLEL)	HARGER	212	1
5/8" x 8'-0" COPPER CLAD GROUND ROD	HARGER	588	2
5/8" GROUND ROD CLAMP	HARGER	301	2
COPPER CABLE LOOP	HARGER	251	10
#12-14 x 3/4" HWH 410SS TEK #2 SCREW	HARGER	295	10

XREF DRAWINGS
520111.dwg

PROFESSIONAL ENGINEER REGISTERED 9774 STATE OF IDAHO THOMAS M. HIPP

FOR DRAWING INDEX SEE DRAWING NO. 520003	SUBCONTRACT NO.	INEEL BECHTEL BWXT IDAHO, LLC
SCALE: 1/4" = 1'-0"	REQUESTER: S. DAVIES DESIGN: THOMAS HIPP DRAWN: RICH WATSON PROJECT NO. 020996 SPEC CODE	INTEC STAGING, STORAGE, SIZING AND TREATMENT FACILITY ENLARGED PLAN AND VIEW
DESIGN PHASE: AFC SAFETY CATEGORY: LSC	FOR REVIEW/APPROVAL SIGNATURES SEE DAR NO. 88704 EFFECTIVE DATE: 3/11/2002	SIZE D · CAGE CODE 01MF3 · INDEX CODE NUMBER AREA 200 TYPE 1689 SQ 10 ORIG 090 · DWG- 520084 · REV SCALE: NOTED · SHEET E-23

Layout Name: E-23
Date: 01/31/02 - 5:21 P.M.
File: 520084.dwg
Path: D:\Ver\SSSTT

REVISIONS		
REV	DESCRIPTION	EFFECTIVE DATE:

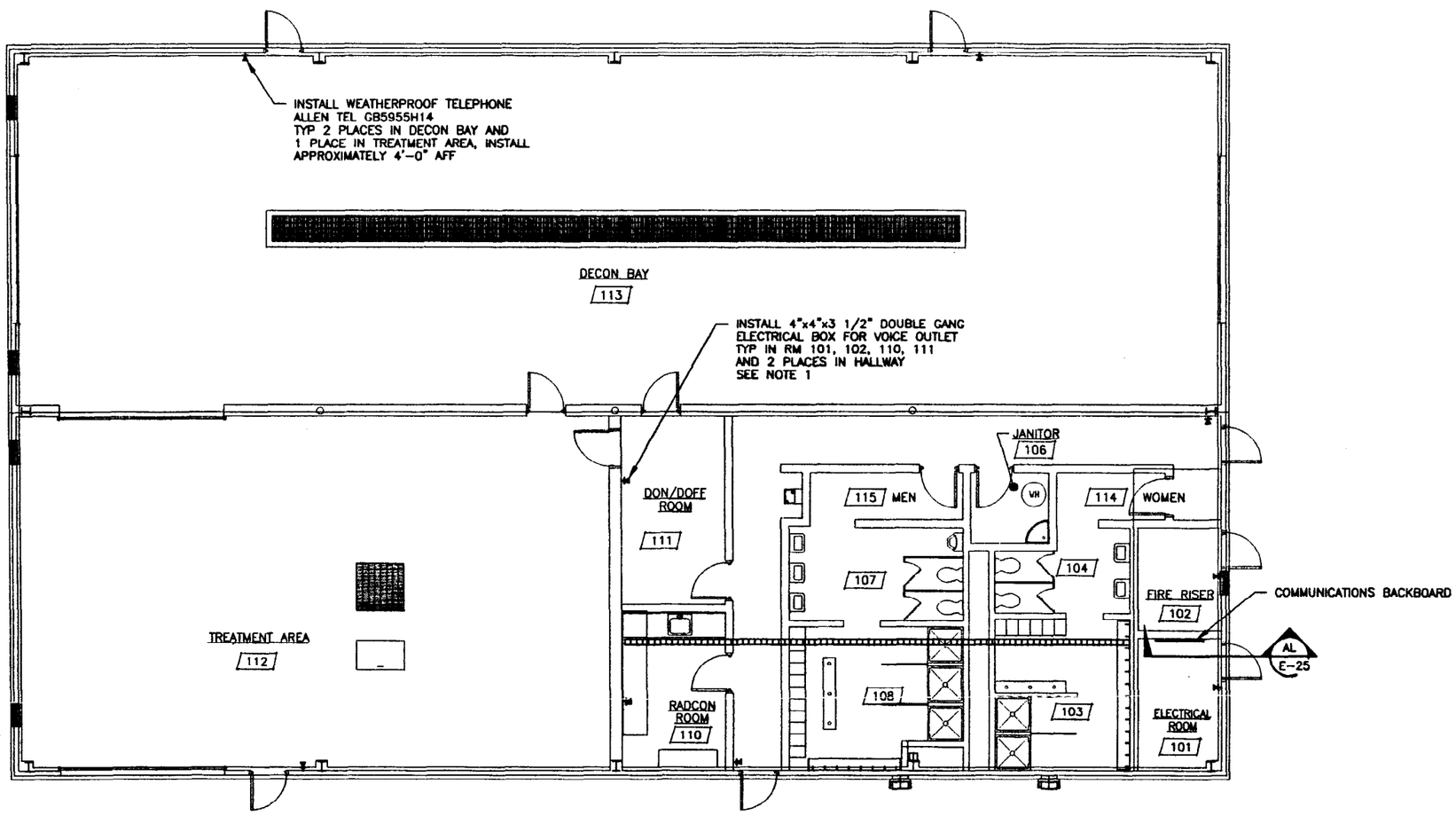

DECON BLDG VOICE/DATA FLOOR PLAN

SCALE: 3/16"=1'-0"

LEGEND

- VOICE OUTLET
- CABLE TRAY ABOVE SUSPENDED CEILING

NOTES

1. EACH VOICE OUTLET SHALL HAVE ONE (1) CAT 3 VOICE CABLE (WHITE). COIL 2'-0" OF CABLES AT EACH OUTLET, AND COIL 20'-0" IN ELEC RM.
2. CABLE MANAGEMENT SYSTEM (CABLE TRAY) SHALL BE FLEXTRAY P/N FT2X6X10 WITH ALL ASSOCIATED HARDWARE AND FITTINGS.
3. ROUTE OFFICE AREA VOICE CABLES IN THE CABLE MANAGEMENT SYSTEM (CABLE TRAY) WHERE AVAILABLE. SUPPORT CABLES FROM CABLE TRAY TO OUTLET LOCATIONS WITH APPROVED CABLES RINGS OR J-HOOKS. CABLE RINGS OR J-HOOKS WILL NOT BE ANCHORED TO THE SUSPENDED CEILING.
4. CABLE MANAGEMENT SYSTEM (CABLE TRAY) SHALL BE FIELD ROUTED ALLOWING APPROX. 1' CLEARANCE ABOVE SUSPENDED CEILING GRID. HEIGHT AND LOCATION MAY VARY AS NEEDED TO AVOID OBSTRUCTIONS. A MINIMUM OF 6" OF CLEARANCE IS REQUIRED ABOVE CABLE TRAY FOR ACCESS.
5. VOICE CABLES IN DECON/TREATMENT AREAS SHALL BE CONTAINED IN 3/4" IMC CONDUIT FIELD ROUTED TO LOCATIONS SHOWN.
6. IN DECON AND TREATMENT AREAS, ALL BOXES, FITTINGS AND CONDUIT SHALL BE MOUNTED SO THAT THERE IS AT LEAST 1/4" AIR SPACE BETWEEN THE COMPONENT AND THE WALL OR MOUNTING SURFACE.

XREF DRAWINGS
520112.dwg

PROFESSIONAL ENGINEER REGISTERED $779 3/12/02 STATE OF IDAHO THOMAS M. HIPP

FOR DRAWING INDEX SEE DRAWING NO. 520003	SUBCONTRACT NO.	INEEL BECHTEL BWXT IDAHO, LLC
1' 0 1' 2' 3' 4' 5' 10' SCALE: 3/16" = 1'-0"	REQUESTER: S. DAVIES DESIGN: T. HIPP DRAWN: RICH WATSON PROJECT NO. 020996 SPEC CODE	INTEC STAGING, STORAGE, SIZING AND TREATMENT FACILITY DECON BUILDING VOICE OUTLET FLOOR PLAN
DESIGN PHASE: AFC	FOR REVIEW/APPROVAL SIGNATURES SEE DAR NO. 88704	SIZE D · CAGE CODE 01MF3 · INDEX CODE NUMBER AREA 200 TYP 1688 Q 06 SEQ 090 · DWG-520085 · REV
SAFETY CATEGORY: LSC	EFFECTIVE DATE: 3/13/2002	SCALE: NOTED · SHEET E-24

File: 520085.dwg
Path: G:\Acr\SSSTF
Layout Name: 520085
Date: 01/31/02 - 5:21 P.M.
ID: MBC

REVISIONS		
REV	DESCRIPTION	EFFECTIVE DATE

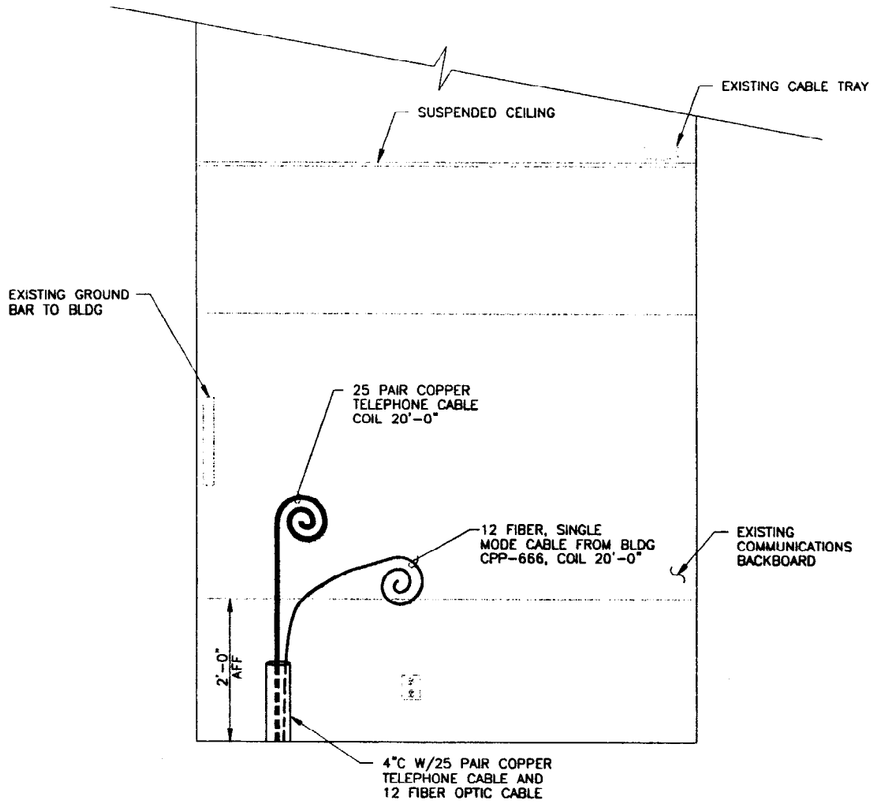

VIEW (AJ / E-22)
SCALE: 1"=1'-0"

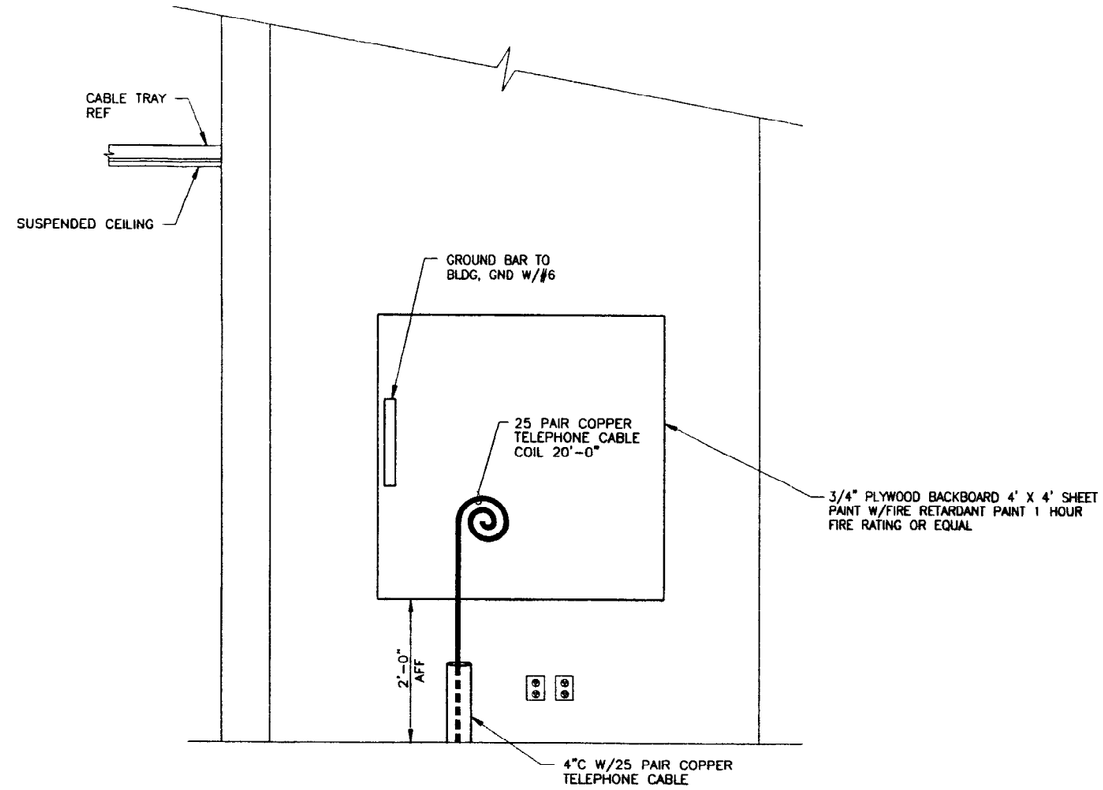

VIEW (AL / E-24)
SCALE: 1"=1'-0"

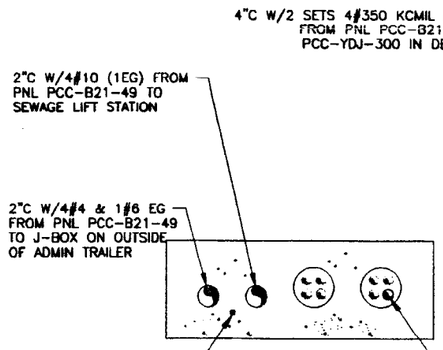

SECTION (AM / E-21)
SCALE: 1-1/2"=1'=0"

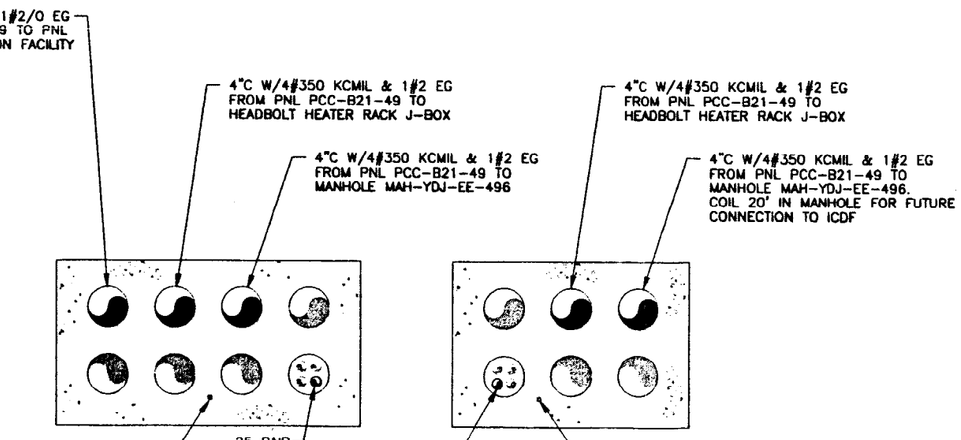

SECTION (AT / E-21)
SCALE: 1-1/2"=1'=0"

SECTION (AP / E-21)
SCALE: 1-1/2"=1'=0"

PROFESSIONAL ENGINEER REGISTERED 9778 STATE OF IDAHO THOMAS M. HOPE 3/8/02

INDEX CODE NUMBER			
AREA	TYPE	CL	ORIG
200	0900	06	090

FOR DRAWING INDEX SEE DRAWING NO. 520003

SCALE: 1" = 1'-0"

SCALE: 1 1/2" = 1'-0"

DESIGN PHASE: AFC

SAFETY CATEGORY: LSC

SUBCONTRACT NO.

REQUESTER: LEE DAVIDSON

DESIGN: NANCY JOHNSON

DRAWN: N.L. ROHRBAUGH

PROJECT NO. 020996

SPEC CODE

FOR REVIEW/APPROVAL SIGNATURES SEE DAR NO. 88704

EFFECTIVE DATE: 3/11/2002

INEEL — Bechtel BWXT Idaho, LLC

INTEC
STAGING, STORAGE, SIZING AND TREATMENT FACILITY

VOICE/DATA VIEWS AND SECTIONS

SIZE	CAGE CODE	INDEX CODE NUMBER				DWG-	REV
		AREA	TYPE	CL	ORIG		
D	01MF3	200	1689	06	090	520086	

SCALE: NOTED

SHEET E-25

File: 520086.dwg
Path: G:\Acad\SSSTF
Drawn in Model Space
Date: 01/31/02 - 5:22 P.M.

REVISIONS		
REV	DESCRIPTION	EFFECTIVE DATE

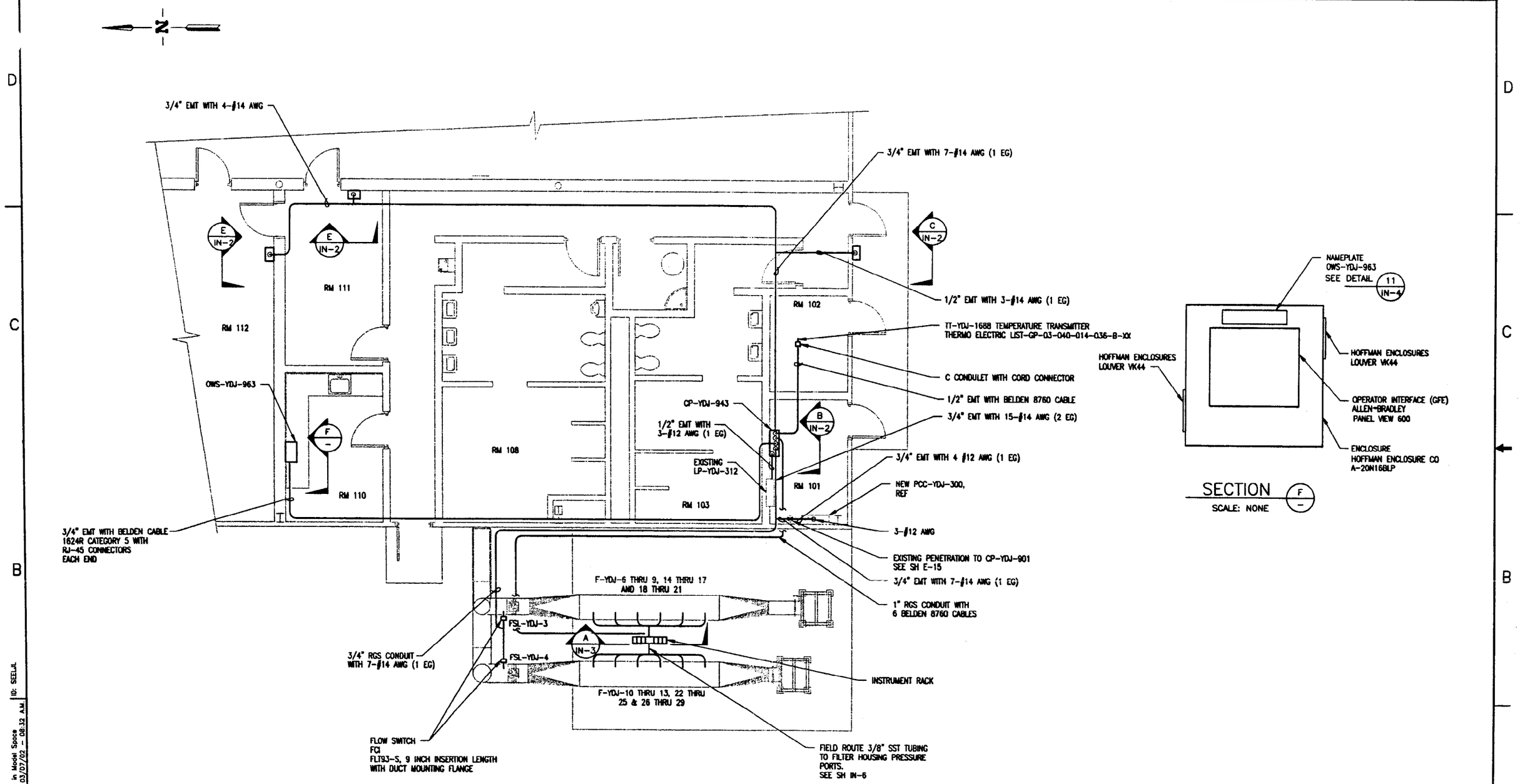

SECTION F
SCALE: NONE

DECON BLDG INSTRUMENTATION FLOOR PLAN
SCALE: 1/4" = 1'-0"

FOR DRAWING INDEX SEE DRAWING NO. 520003	SUBCONTRACT NO.	INEEL
SCALE: 1/4" = 1'-0"	REQUESTER: S. DAVIES	INTEC STAGING, STORAGE, SIZING AND TREATMENT FACILITY
	DESIGN: G. MAKEY	DECON BLDG INSTRUMENTATION FLOOR PLAN
	DRAWN: R. HAMMOND	
	PROJECT NO. 020996	
	SPEC CODE	
DESIGN PHASE: AFC	FOR REVIEW/APPROVAL SIGNATURES SEE DAR NO. 88704	SIZE D; CAGE CODE 01MF3; INDEX CODE NUMBER AREA 200, TYPE 1688, Q 10, ORG 090; DWG-520087; REV
SAFETY CATEGORY: LSC	EFFECTIVE DATE: 3/11/2002	SCALE: NOTED; YDJ; SHEET IN-1

Drawn in Model Space
Date: 03/07/02 - 08:32 A.M.
ID: SEELJL
File: 520087.dwg
Path: W:\Ldcr\SSSTF

REVISIONS		
REV	DESCRIPTION	EFFECTIVE DATE

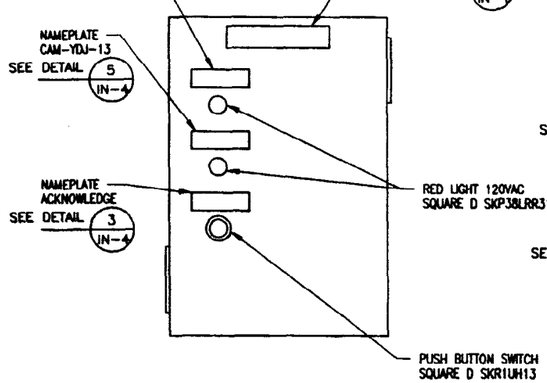

CP-YDJ-943
FRONT OF PANEL
SCALE: NONE

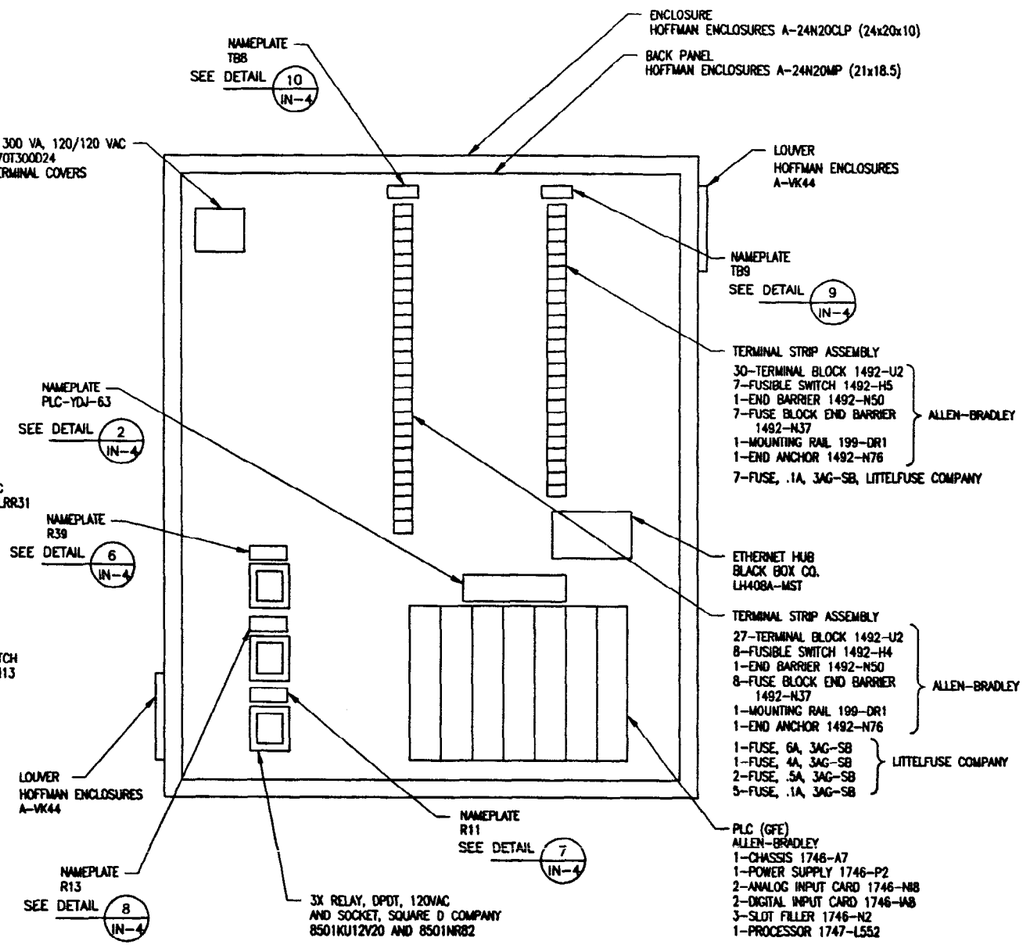

CP-YDJ-943
DOOR REMOVED FOR CLARITY

VIEW B IN-1
SCALE: NONE

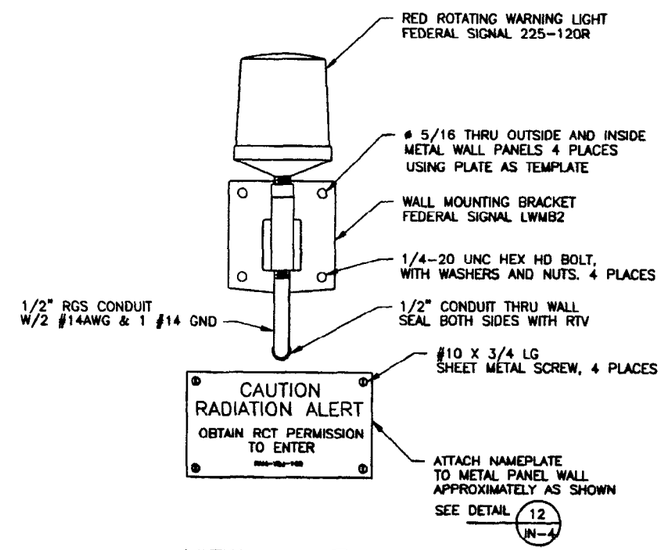

VIEW C IN-1
SCALE: 1/4"=1'-0"

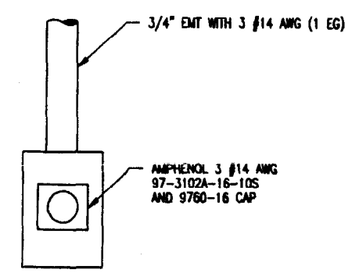

VIEW E IN-1
SCALE: NONE

FOR DRAWING INDEX SEE DRAWING NO. 520003	SUBCONTRACT NO.	INEEL BATTELLE ENERGY ALLIANCE, LLC
SCALE: 1/4" = 1'-0"	REQUESTER: S. DAVIES	INTEC STAGING, STORAGE, SIZING AND TREATMENT FACILITY
	DESIGN: G. MAKEY	
	DRAWN: R. HAMMOND	SECTIONS
	PROJECT NO. 020996	
	SPEC CODE	
DESIGN PHASE: AFC	FOR REVIEW/APPROVAL SIGNATURES SEE DAR NO. 88704	SIZE D · CAGE CODE 01MF3 · INDEX COLR NUMBER AREA 200 TYPE 1688 Q 10 DISC 090 · DWG-520088 · REV
SAFETY CATEGORY: LSC	EFFECTIVE DATE: 8/11/2000	SCALE: NOTED · YDJ · SHEET IN-2

PROFESSIONAL ENGINEER REGISTERED 9776 3/08/02 STATE OF IDAHO THOMAS M. HOPP

File: 520088.dwg
Path: W:\Ver5SS5F
Drawn in Model Space
Date: 03/07/02 - 10:40 A.M.
ID: SEELJL

REVISIONS		
REV	DESCRIPTION	EFFECTIVE DATE:

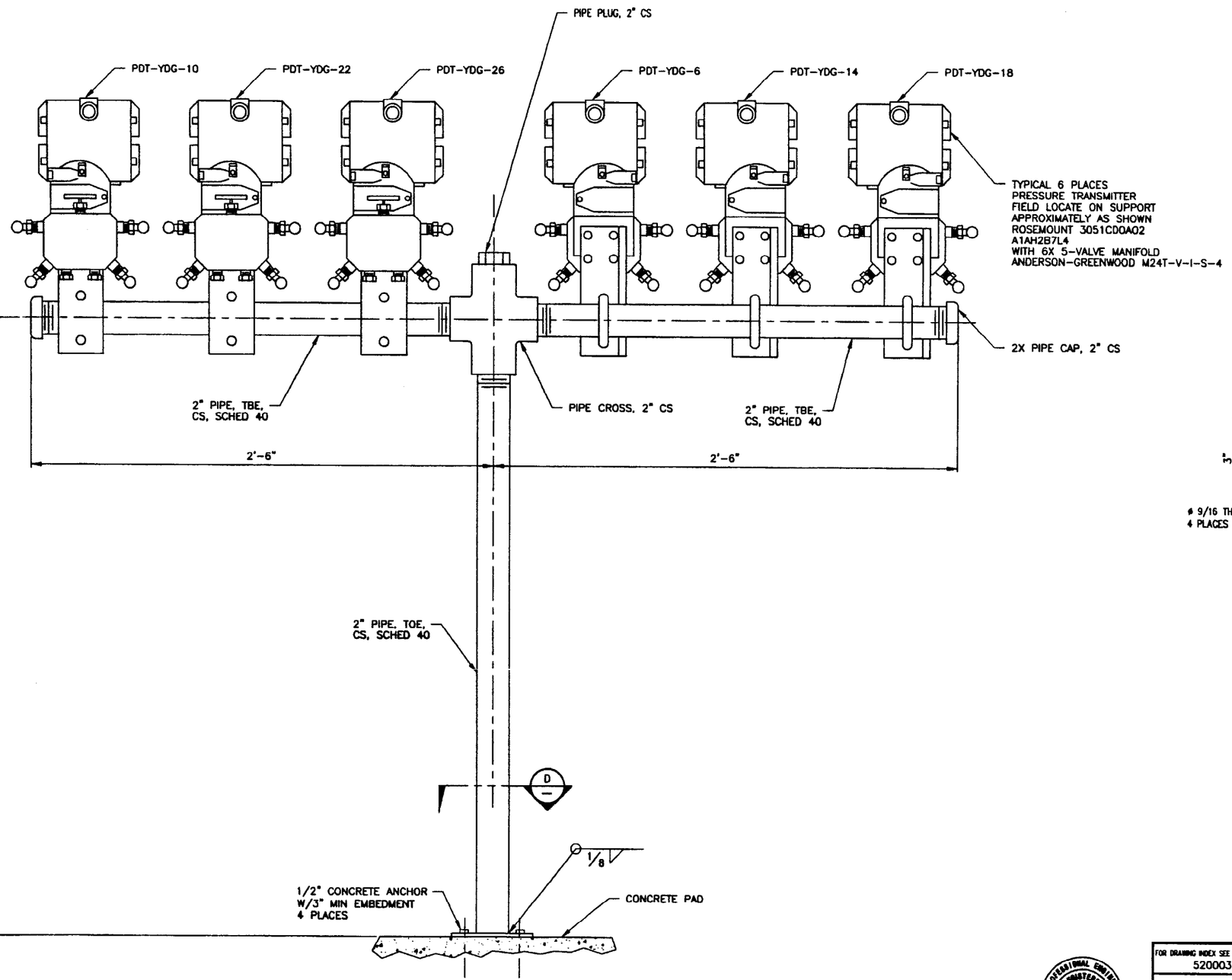

SECTION A (IN-1)
SCALE: 1/4"=1'-0"

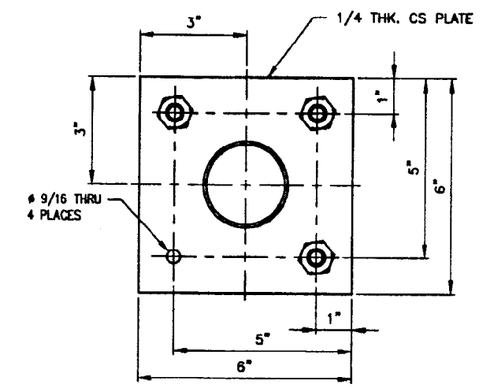

SECTION D
SCALE: 1/2"=1'-0"

FOR DRAWING INDEX SEE DRAWING NO. 520003	SUBCONTRACT NO.	INEEL BATTELLE ENERGY ALLIANCE, LLC
SCALE: 1/2" = 1'-0"	REQUESTER: S. DAVIES	INTEC STAGING, STORAGE, SIZING AND TREATMENT FACILITY
	DESIGN: G. MAKEY	
	DRAWN: R. HAMMOND	
SCALE: 1/4" = 1'-0"	PROJECT NO. 020996	SECTIONS
	SPEC CODE	
DESIGN PHASE: AFC	FOR REVIEW/APPROVAL SIGNATURES SEE DAR NO. 88704	SIZE D · CAGE CODE 01MF3 · INDEX CODE NUMBER AREA 200 TYPE 1688 CL 10 ORG 090 · DWG-520089 · REV
SAFETY CATEGORY: LSC	EFFECTIVE DATE: 3/11/2002	SCALE: NOTED · YDJ · SHEET IN-3

PROFESSIONAL ENGINEER REGISTERED 07770 STATE OF IDAHO THOMAS M. HUNT 3/09/02

Drawn in Model Space
Date: 03/07/02 - 10:13 A.M. | ID: SEELJL
File: 520089.dwg
Path: W:\tbr\SSSTF

REVISIONS		
REV	DESCRIPTION	EFFECTIVE DATE:

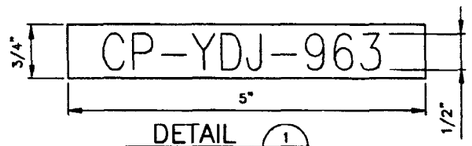

DETAIL 1 IN-2
SCALE: FULL

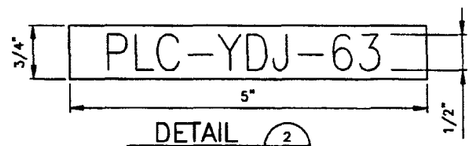

DETAIL 2 IN-2
SCALE: FULL

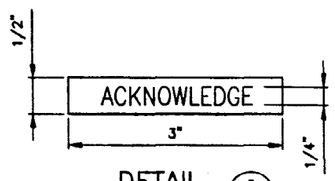

DETAIL 3 IN-2
SCALE: FULL

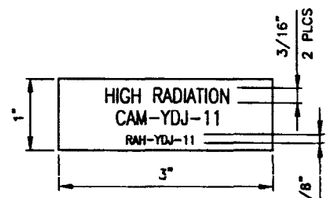

DETAIL 4 IN-2
SCALE: FULL

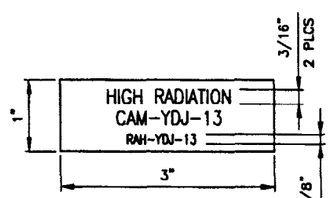

DETAIL 5 IN-2
SCALE: FULL

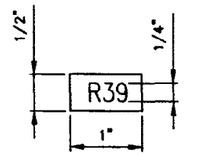

DETAIL 6 IN-2
SCALE: FULL

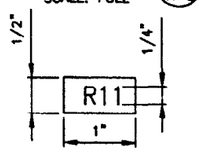

DETAIL 7 IN-2
SCALE: FULL

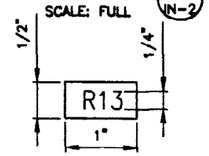

DETAIL 8 IN-2
SCALE: FULL

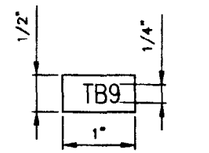

DETAIL 9 IN-2
SCALE: FULL

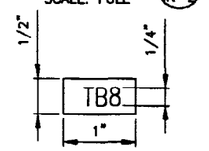

DETAIL 10 IN-2
SCALE: FULL

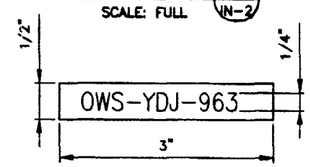

DETAIL 11 IN-1
SCALE: FULL

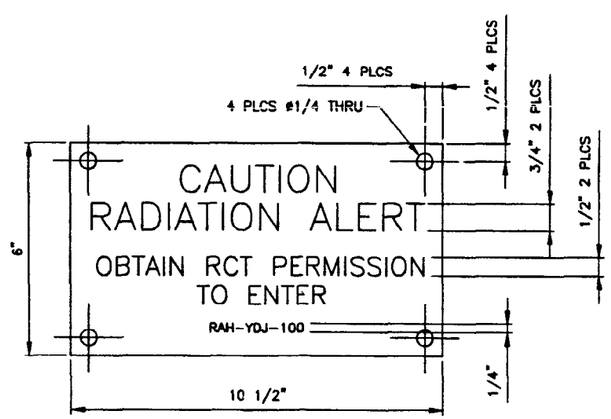

DETAIL 12 IN-2
SCALE: 1/2"=1'-0"

FOR DRAWING INDEX SEE DRAWING NO. 520003	SUBCONTRACT NO.	INEEL LOCKHEED MARTIN IDAHO, LLC
SCALE: 1/2" = 1'-0"	REQUESTER: S. DAVIES DESIGN: G. MAKEY DRAWN: R. HAMMOND PROJECT NO. 020996 SPEC CODE	INTEC STAGING, STORAGE, SIZING AND TREATMENT FACILITY DETAILS
DESIGN PHASE: AFC	FOR REVIEW/APPROVAL SIGNATURES SEE DWR NO. 88704	SIZE D · CAGE CODE 01MF3 · INDEX CODE NUMBER AREA 200 TYPE 1688 CL 10 DWG 090 · DWG-520090 · REV
SAFETY CATEGORY: LSC	EFFECTIVE DATE: 3/11/2002	SCALE: NOTED · YDJ · SHEET IN-4

PROFESSIONAL ENGINEER STATE OF IDAHO 8779 THOMAS M. HOPP

File: 520090.dwg
Path: W:\kbf\SSSTF
Drawn in Model Space
Date: 03/07/02 - 12:54 P.M.
ID: SEELJL

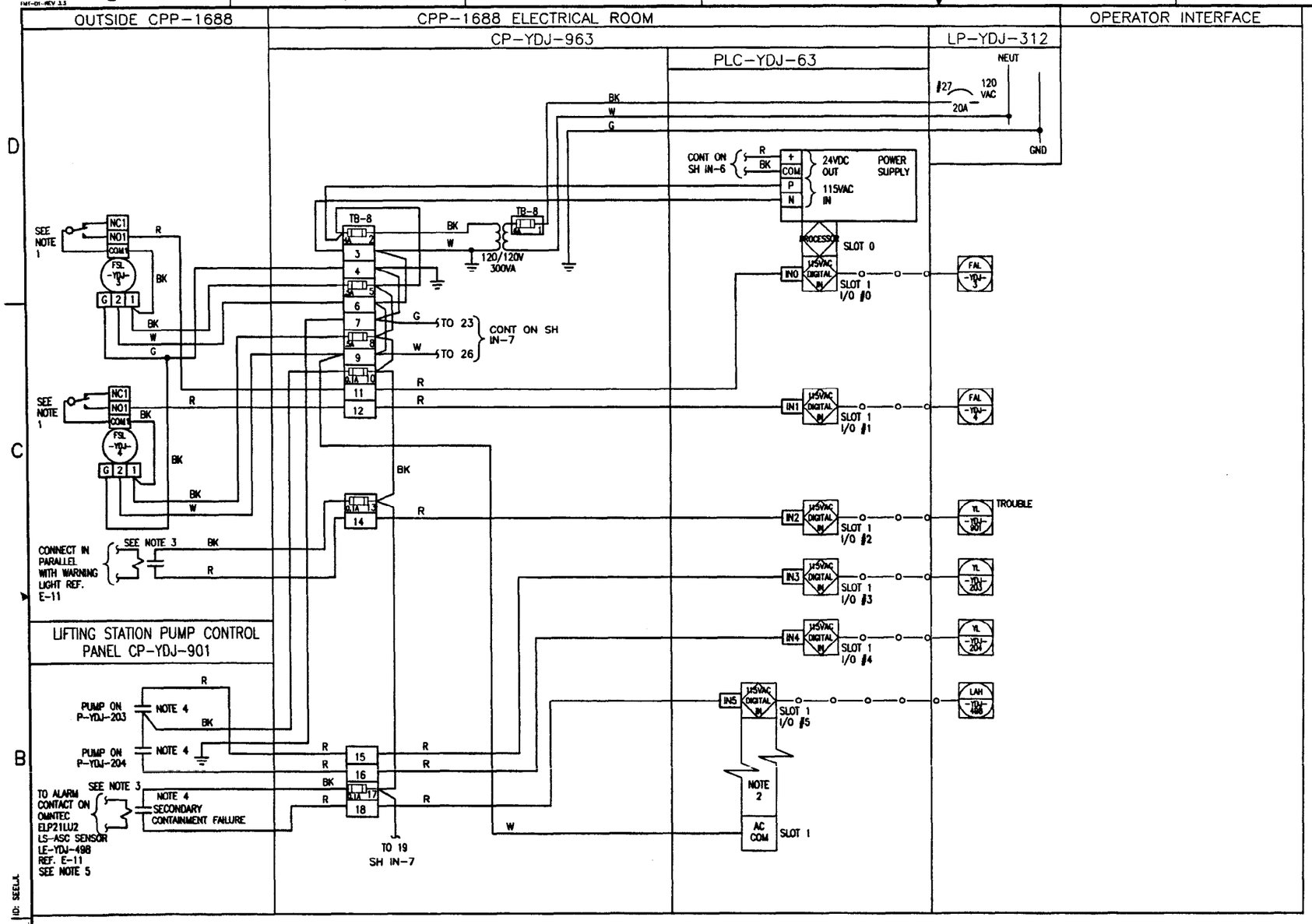

NOTES

1. NORMALLY OPEN CONTACT OPENS ON LOW FLOW (FAILSAFE).
2. INPUTS 6 AND 7 TO BE SPARE.
3. DPDT RELAY 120VAC COIL. POTTER BRUMFIELD KRP SERIES OR EQUAL.
4. NORMALLY OPEN AUXILIARY CONTACTS CLOSE WHEN PUMP IS RUNNING.
5. RELAY COIL TO BE CONNECTED IN PARALLEL WITH WARNING LIGHT ON CP-YDJ-901. FIELD DETERMINE WARNING LIGHT CURRENT RATING. IF GREATER THAN ONE AMPERE IS REQUIRED CONTACT FIELD ENGINEERING FOR INSTRUCTIONS.

REVISIONS		
REV	DESCRIPTION	EFFECTIVE DATE:

FOR DRAWING INDEX SEE DRAWING NO. 520003	SUBCONTRACT NO.	INEEL BATTELLE ENERGY ALLIANCE, LLC
NO SCALE	REQUESTER: S. DAVIES DESIGN: G. MAKEY DRAWN: R. HAMMOND PROJECT NO. 020996 SPEC CODE	INTEC STAGING, STORAGE, SIZING AND TREATMENT FACILITY LOOP DIAGRAM
DESIGN PHASE: AFC	FOR REVIEW/APPROVAL SIGNATURES SEE DAR NO. 88704	SIZE D · CAGE CODE 01MF3 · INDEX CODE NUMBER AREA 200 TYPE 1688 Q 28 DRG 090 · DWG- 520091 · REV
SAFETY CATEGORY: LSC	EFFECTIVE DATE: 3/11/2002	SCALE: NONE · YDJ · SHEET IN-5

PROFESSIONAL ENGINEER REGISTERED 9770 STATE OF IDAHO THOMAS M. HOPP

ID: SEELK
Drawn in Model Space
Date: 03/07/02 - 10:44 A.M.
File: 520091.dwg
Path: W:\ldr\SSSTF

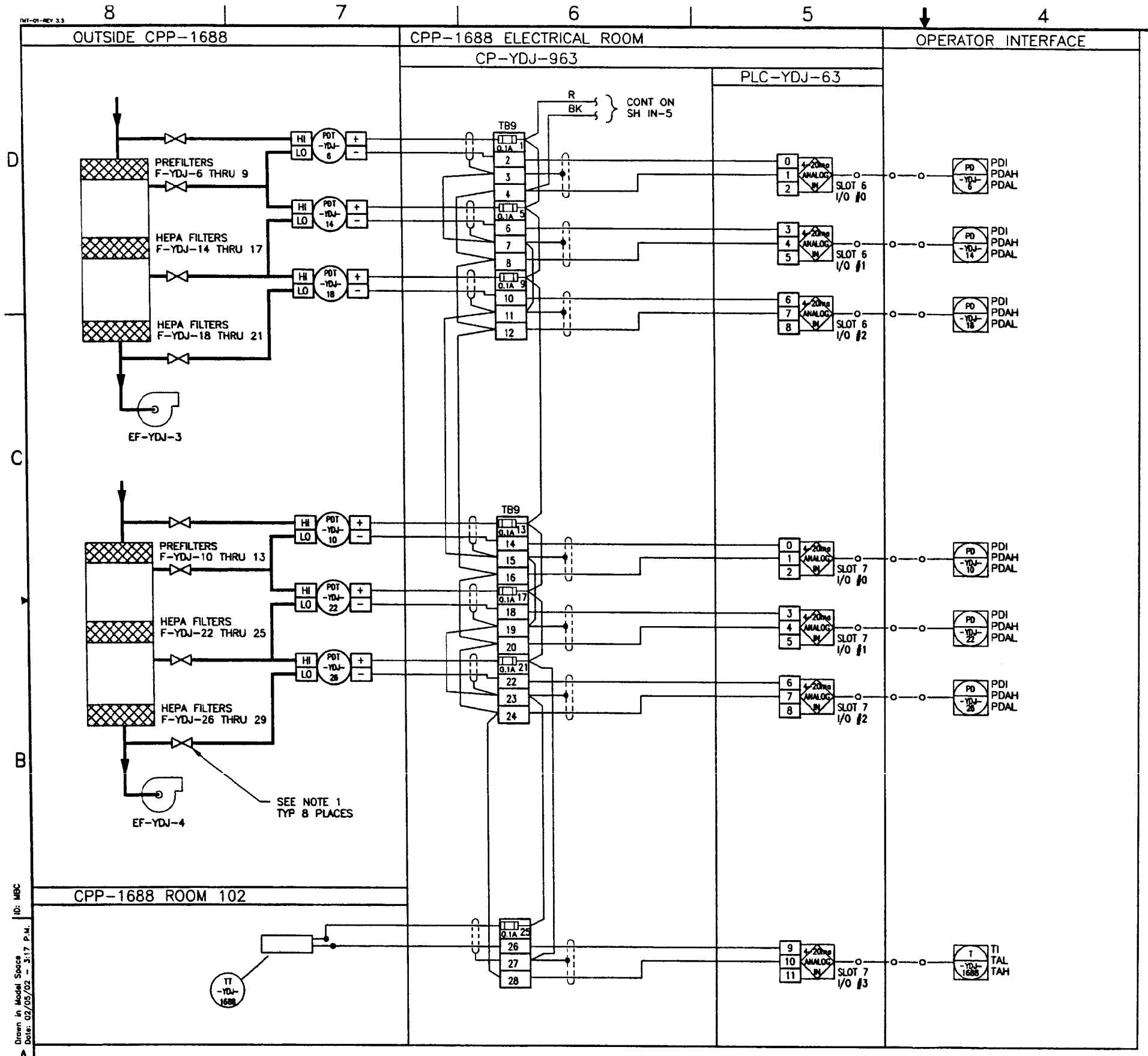

NOTES

1. INSTALL VALVE AS CLOSE AS POSSIBLE TO FILTER HOUSING IN TUBING LINE.

FOR DRAWING INDEX SEE DRAWING NO. 520003	SUBCONTRACT NO.	INEEL BECHTEL BWXT IDAHO, LLC
NO SCALE	REQUESTER: S. DAVIES DESIGN: G. MAKEY DRAWN: R. HAMMOND PROJECT NO. 020996 SPEC CODE	INTEC STAGING, STORAGE, SIZING AND TREATMENT FACILITY LOOP DIAGRAM
DESIGN PHASE: AFC	FOR REVIEW/APPROVAL SIGNATURES SEE DAR NO. 88704	SIZE D · CAGE CODE 01MF3 · INDEX CODE NUMBER AREA 200 TYPE 1688 SEQ 28 SUB 090 · DWG-520092 · REV
SAFETY CATEGORY: LSC	EFFECTIVE DATE: 3/8/2002	SCALE: NONE · YDJ · SHEET IN-6

PROFESSIONAL ENGINEER REGISTERED 8778 STATE OF IDAHO THOMAS M. HOPE 3/08/02

REVISIONS

REV	DESCRIPTION	EFFECTIVE DATE:

91

INT-01-REV 3.3

ID: MBC
Drawn in Model Space
Date: 03/05/02 - 3:17 P.M.
File: 520092.dwg
Path: G:\bbr\SSSTF

REVISIONS		
REV	DESCRIPTION	EFFECTIVE DATE:

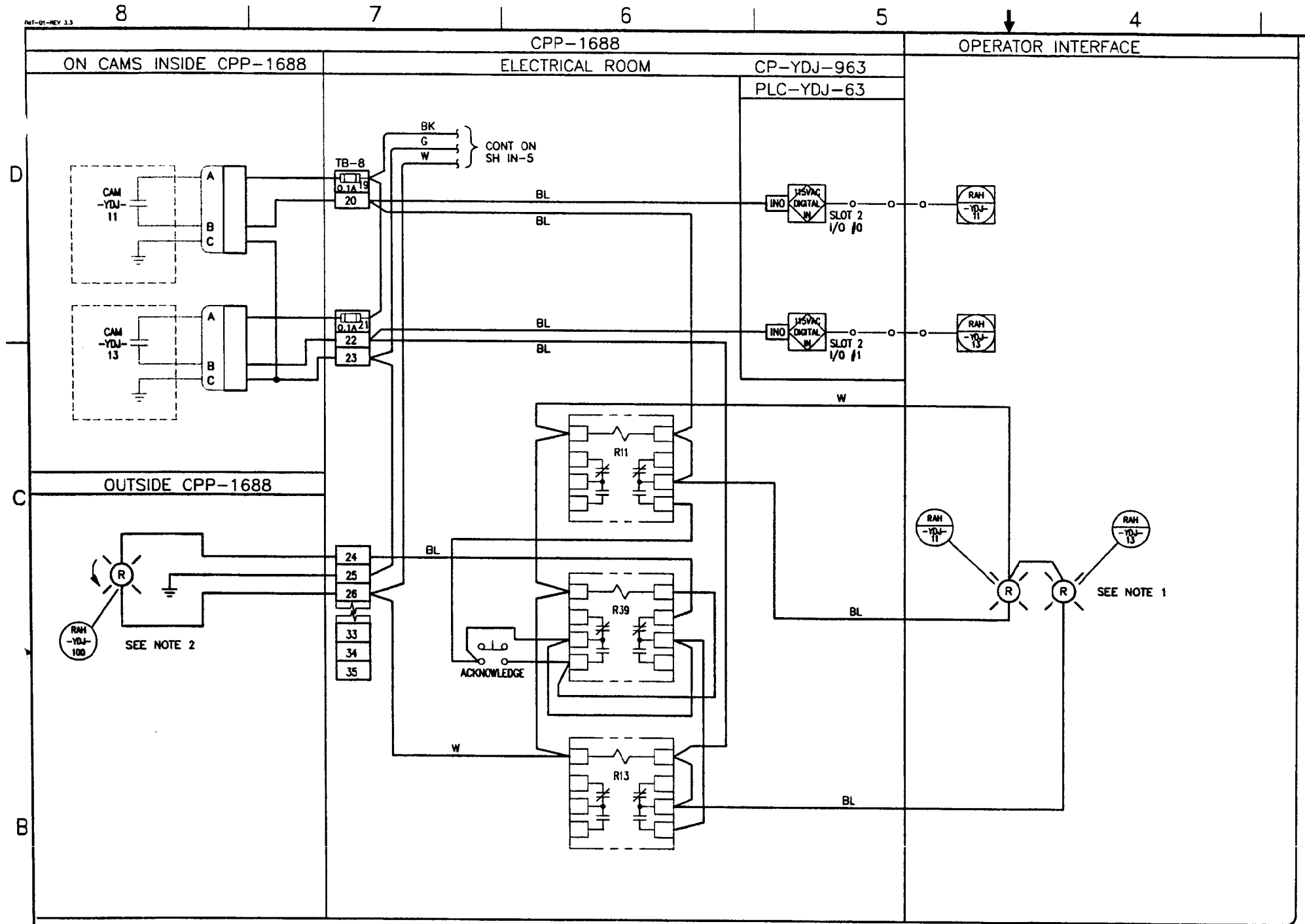

NOTES

1. INDICATE AIRBORNE CONTAMINATION FROM RESPECTIVE CAM. REMAINS ILLUMINATED UNTIL CAM COMES OUT OF ALARM STATE.
2. INDICATES BUILDING CAM HAS GONE TO ALARM STATE. ACKNOWLEDGE BUTTON WILL DE-ENERGIZE.

FOR DRAWING INDEX SEE DRAWING NO. 520003	SUBCONTRACT NO.	INEEL BECHTEL BWXT IDAHO, LLC
NO SCALE	REQUESTER: S. DAVIES DESIGN: G. MAKEY DRAWN: R. HAMMOND PROJECT NO. 020996 SPEC CODE	INTEC STAGING, STORAGE, SIZING AND TREATMENT FACILITY LOOP DIAGRAM
DESIGN PHASE: AFC	FOR REVIEW/APPROVAL SIGNATURES SEE DAR NO. 88704	SIZE D · CAGE CODE 01MF3 · INDEX CODE NUMBER AREA 200 TYPE 1688 Q 28 ORG 090 · DWG-520093 · REV
SAFETY CATEGORY: LSC	EFFECTIVE DATE: 3/5/2002	SCALE: NONE · YDJ · SHEET IN-7

PROFESSIONAL ENGINEER REGISTERED STATE OF IDAHO THOMAS M. HOPE 7770 3/8/02

File: 520093.dwg
Path: G:\ehr\SSSTF
Drawn in Model Space
Date: 02/05/02 - 3:18 P.M.
ID: MBC

REVISIONS		
REV	DESCRIPTION	EFFECTIVE DATE

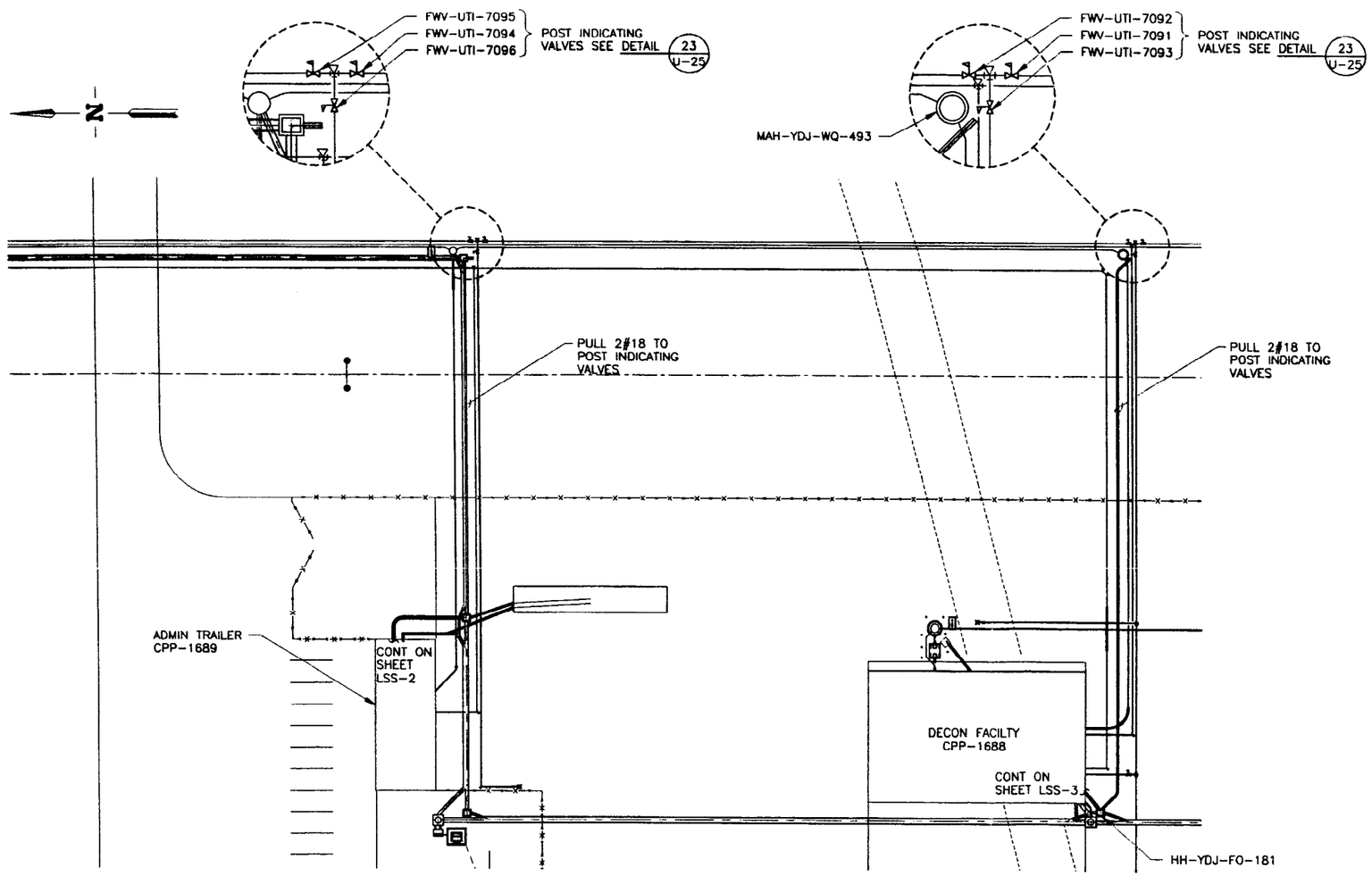

ENLARGED PLAN

SCALE: 1"=30.0'

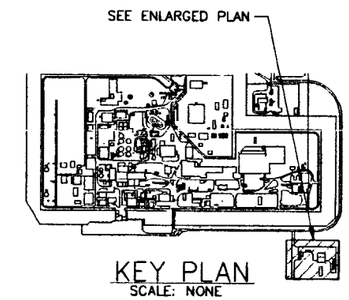

KEY PLAN

SCALE: NONE

NOTES

1. SEE UTILITIES SHEETS FOR DUCT BANK INSTALLATION DETAILS.

XREF DRAWINGS
520110.dwg

PROFESSIONAL ENGINEER REGISTERED 4448 3/7/02 STATE OF IDAHO JOHN D. JENSEN

INDEX CODE NUMBER			
AREA	TYPE	CL	ORIG
200	090	12	090

FOR DRAWING INDEX SEE DRAWING NO. 520003	SUBCONTRACT NO.
30' 20' 10' 0 30' SCALE: 1" = 30.0'	REQUESTER: S. DAVIES
	DESIGN: JOHN JENSEN
	DRAWN: RICH WATSON
	PROJECT NO. 020996
	SPEC CODE
	FOR REVIEW/APPROVAL SIGNATURES SEE DAR NO. 88704
DESIGN PHASE: AFC	EFFECTIVE DATE: 3/11/2002
SAFETY CATEGORY: LSC	

INEEL BECHTEL BWXT IDAHO, LLC

INTEC
STAGING, STORAGE, SIZING
AND TREATMENT FACILITY

ENLARGED PLAN AND DETAIL

SIZE	CAGE CODE	INDEX CODE NUMBER				DWG	REV
		AREA	TYPE	CL	ORIG		
D	01MF3	200	1689	12	090	520094	

SCALE: NOTED

SHEET LSS-1

Layout Name: 520094
Date: 01/30/02 - 8:38 P.M.
ID: MBC
File: 520094.dwg
Path: G:\sb\SSSTF

REVISIONS		
REV	DESCRIPTION	EFFECTIVE DATE

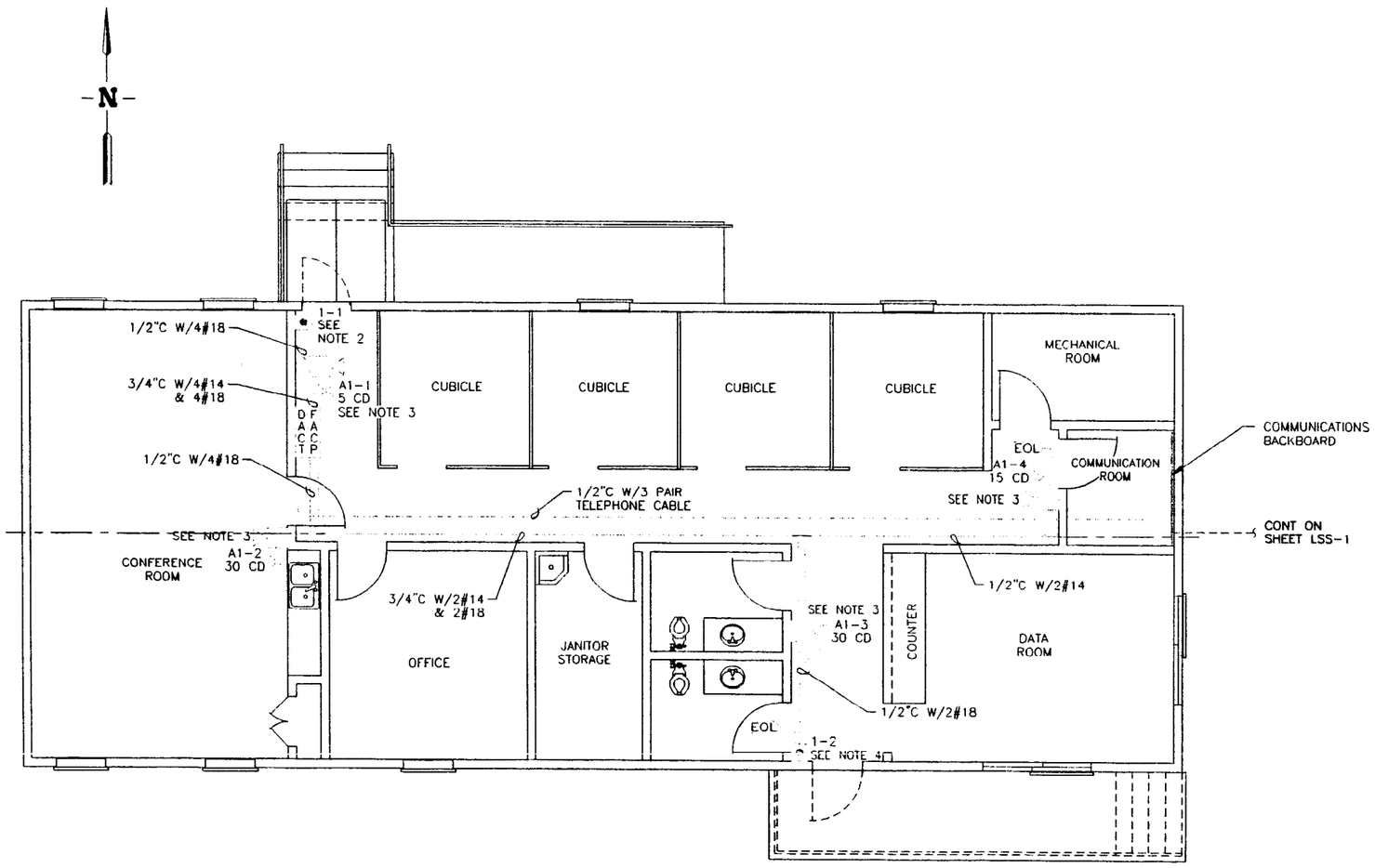

ADMIN BLDG FLOOR PLAN

SCALE: 1/4"=1'-0"

NOTES

1. ALL LIFE SAFETY SYSTEMS EQUIPMENT IN ADMIN TRAILER INSTALLED BY TRAILER VENDOR. FLOOR PLAN SHOWN IS SCHEMATIC ONLY. THE FLOOR PLAN MAY VARY DEPENDING ON THE BUILDING SUPPLIER.
2. CEILING MOUNTED AUDIBLE/VISIBLE DEVICE.
3. AUDIBLE/VISIBLE DEVICE 96" ABOVE FINISHED FLOOR.
4. INSTALLATION HEIGHT 40" ABOVE FINISHED FLOOR TO CENTER OF DEVICE.
5. SEE SHEET LSS-4 FOR LEGEND.

XREF DRAWINGS
520111.dwg

PROFESSIONAL ENGINEER REGISTERED 4448 STATE OF IDAHO JOHN D. JENSEN 03/11/02

FOR DRAWING INDEX SEE DRAWING NO. 520003	SUBCONTRACT NO.	INEEL BECHTEL BWXT IDAHO, LLC
1' 0 1' 2' 3' 4' 5' 6' 7' SCALE: 1/4" = 1'-0"	REQUESTER: S. DAVIES DESIGN: JOHN JENSEN DRAWN: RICH WATSON PROJECT NO. 020996 SPEC CODE	INTEC STAGING, STORAGE, SIZING AND TREATMENT FACILITY ADMIN BUILDING FLOOR PLAN
DESIGN PHASE: AFC	FOR REVIEW/APPROVAL SIGNATURES SEE DAR NO. 88704	SIZE D · CAGE CODE 01MF3 · INDEX CODE NUMBER AREA 200 · SYS 1689 · Q 12 · SEQ 090 · DWG-520095 · REV
SAFETY CATEGORY: LSC	EFFECTIVE DATE: 3/11/2002	SCALE: 1/4"=1'-0" · SHEET LSS-2

Layout Name: 520095
Date: 01/30/02 - 8:24 P.M.
ID: MBC
File: 520095.dwg
Path: G:\lss\SSSTF

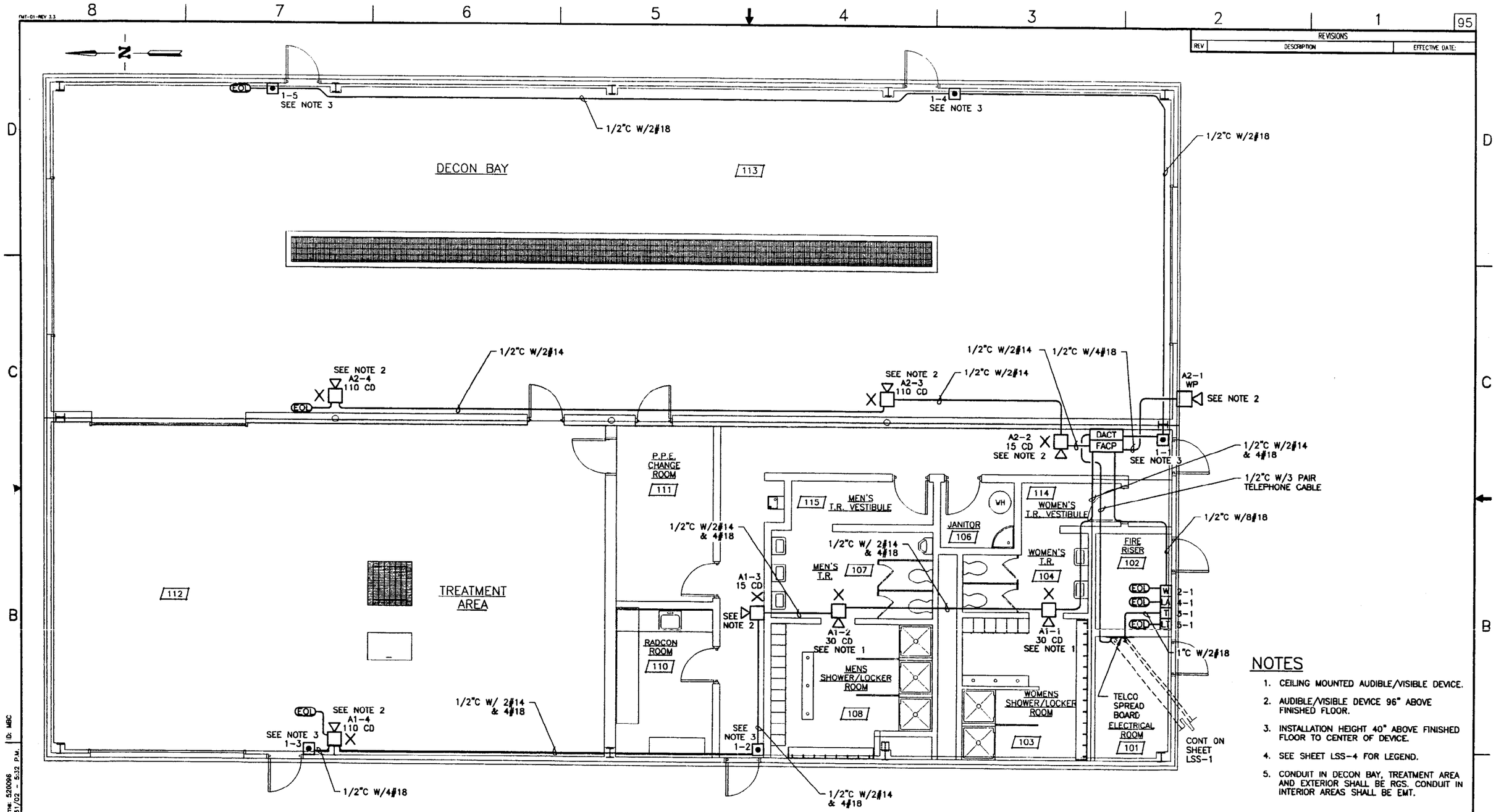

NOTES

1. CEILING MOUNTED AUDIBLE/VISIBLE DEVICE.
2. AUDIBLE/VISIBLE DEVICE 96" ABOVE FINISHED FLOOR.
3. INSTALLATION HEIGHT 40" ABOVE FINISHED FLOOR TO CENTER OF DEVICE.
4. SEE SHEET LSS-4 FOR LEGEND.
5. CONDUIT IN DECON BAY, TREATMENT AREA AND EXTERIOR SHALL BE RGS. CONDUIT IN INTERIOR AREAS SHALL BE EMT.

XREF DRAWINGS
520112.dwg

DECON BLDG FLOOR PLAN

SCALE: 1/4"=1'-0"

REVISIONS		
REV	DESCRIPTION	EFFECTIVE DATE:

PROFESSIONAL ENGINEER REGISTERED 4448 3/7/02 STATE OF IDAHO JOHN D. JENSEN

FOR DRAWING INDEX SEE DRAWING NO.	520003
SCALE: 1/4" = 1'-0"	
DESIGN PHASE:	AFC
SAFETY CATEGORY:	LSC
SUBCONTRACT NO.	
REQUESTER:	S. DAVIES
DESIGN:	JOHN JENSEN
DRAWN:	RICH WATSON
PROJECT NO.	020996
SPEC CODE	
FOR REVIEW/APPROVAL SIGNATURES SEE DAR NO. 88704	
EFFECTIVE DATE:	3/11/2002

INEEL — BECHTEL BWXT IDAHO, LLC

INTEC
STAGING, STORAGE, SIZING
AND TREATMENT FACILITY

DECON BUILDING FLOOR PLAN

SIZE	CAGE CODE	INDEX CODE NUMBER					DWG-	REV
		AREA	TYPE	Q	DISC			
D	01MF3	200	1688	12	090		520096	

SCALE: 1/4"=1'-0" SHEET LSS-3

File: 520096.dwg
Path: C:\Jobs\SSTF
Layout Name: 520096
Date: 01/31/02 - 5:32 P.M.
ID: MBC

REVISIONS		
REV	DESCRIPTION	EFFECTIVE DATE

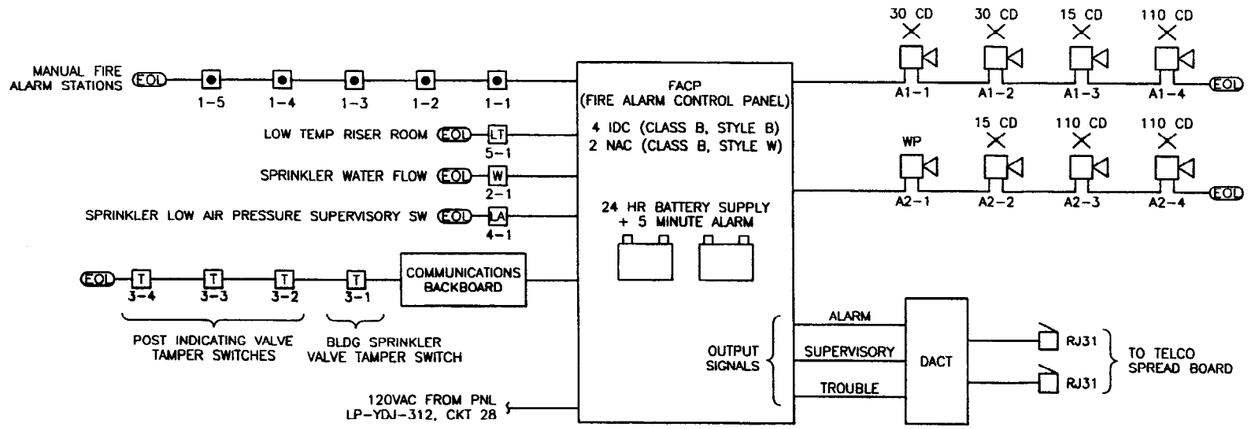

DECON BLDG FIRE ALARM RISER

SCALE: NONE

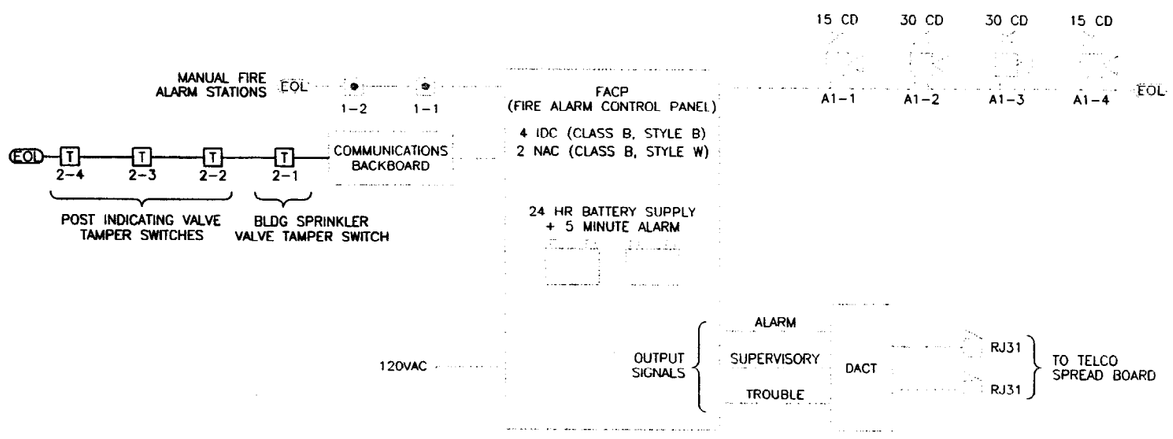

ADMIN TRAILER FIRE ALARM RISER

SCALE: NONE

LEGEND

- MANUAL FIRE ALARM STATION
- W — SPRINKLER WATER FLOW
- T — SPRINKLER VALVE SUPERVISORY TAMPER SWITCH
- LA — LOW AIR PRESSURE SUPERVISORY SWITCH
- LT — LOW TEMP SUPERVISORY SWITCH
- AUDIBLE OCCUPANT NOTIFICATION DEVICE
- XX CD — CANDELLA RATING (MINIMUM)
- AUDIBLE/VISUAL OCCUPANT NOTIFICATION DEVICE
- FACP — FIRE ALARM CONTROL PANEL
- DACT — DIGITAL ALARM COMMUNICATION TRANSMITTER
- EOL — END-OF-LINE DEVICE
- TELEPHONE LINE PLUG

PROFESSIONAL ENGINEER REGISTERED 4448 3/17/02 STATE OF IDAHO JOHN D. JENSEN

FOR DRAWING INDEX SEE DRAWING NO. 520003	SUBCONTRACT NO.	INEEL BECHTEL BWXT IDAHO, LLC
NO SCALE	REQUESTOR: S. DAVIES DESIGN: JOHN JENSEN DRAWN: RICH WATSON PROJECT NO. 020996 SPEC CODE	INTEC STAGING, STORAGE, SIZING AND TREATMENT FACILITY RISER DIAGRAMS AND LEGEND
DESIGN PHASE: AFC	FOR REVIEW/APPROVAL SIGNATURES SEE DAR NO. 88704	SIZE D; CAGE CODE 01MF3; MULT. DWG. NUMBER AREA 200, TYPE 1688, Q 12, ORG. 090; DWG- 520097; REV
SAFETY CATEGORY: LSC	EFFECTIVE DATE: 3/14/2002	SCALE: NONE; SHEET LSS-4

File: 520097.dwg
Path: G:\Vbx\SSTF
Layout Name: 520097
Date: 01/30/02 - 8:37 P.M.
ID: MBC