Appendix D

Design Drawings

FMT-01-REV 3.3

REVISIONS		
REV	DESCRIPTION	EFFECTIVE DATE:

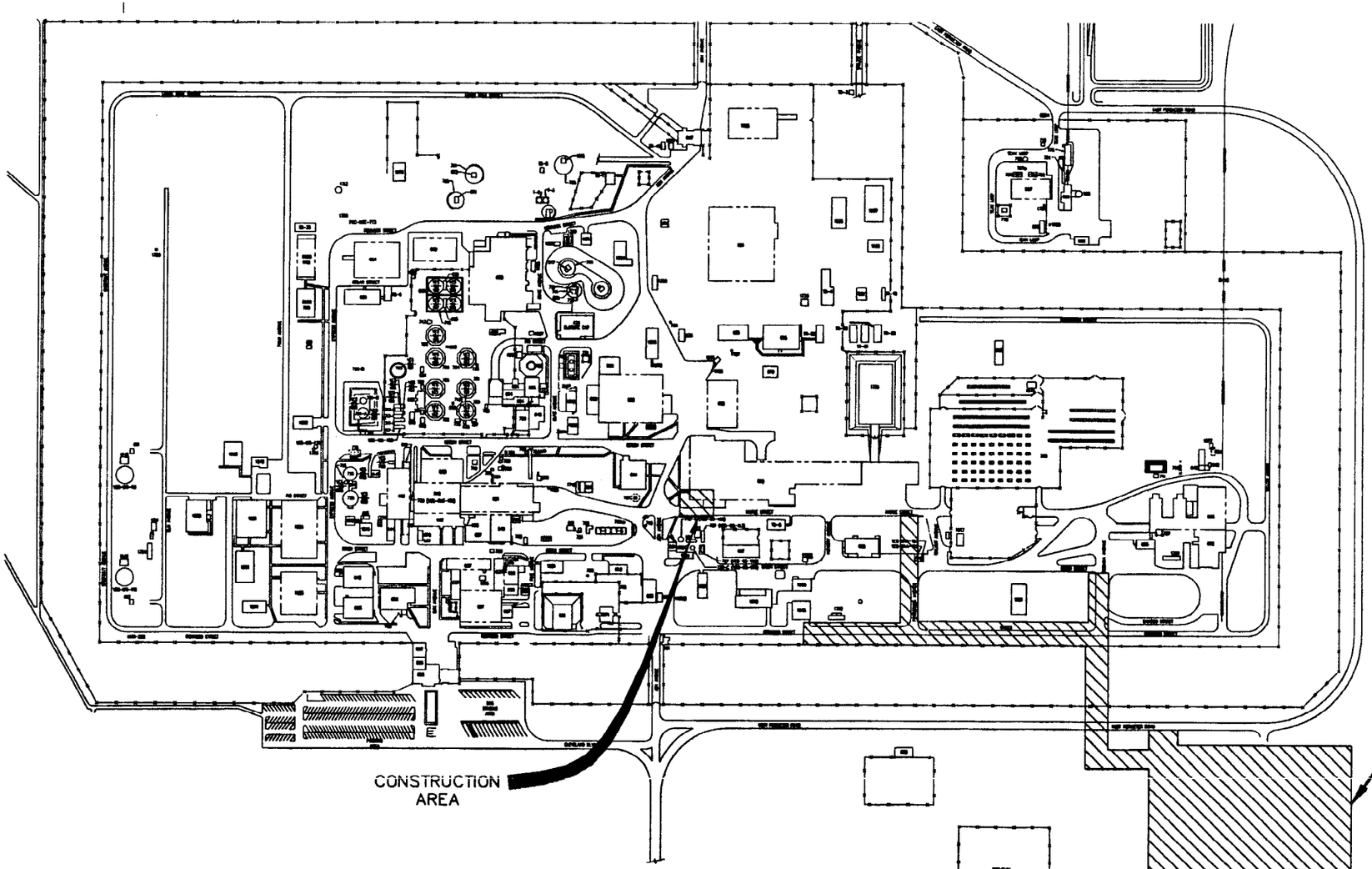

INTEC AREA MAP

SCALE: 1"=200.0'

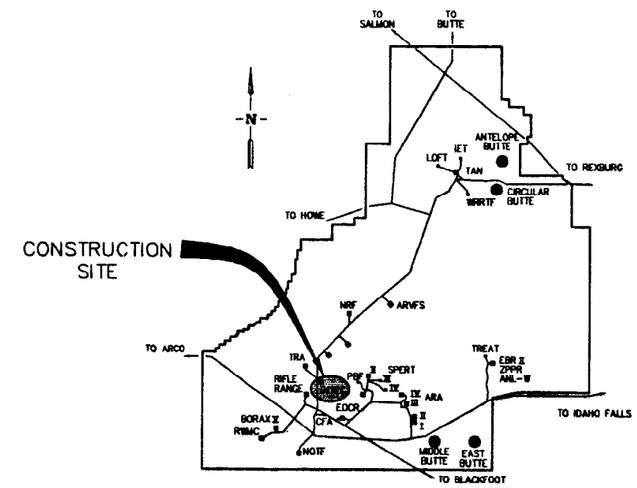

SITE MAP

SCALE: NONE

NOTES

1. RETAIN AND PROTECT ALL FACILITIES UNLESS OTHERWISE NOTED.

FOR DRAWING INDEX SEE DRAWING NO. 520003	SUBCONTRACT NO.	INEEL BECHTEL BWXT IDAHO, LLC
200' 100' 50' 0 200' SCALE: 1" = 200.0'	REQUESTER: S.A. DAVIES	INTEC STAGING, STORAGE, SIZING AND TREATMENT FACILITY
	DESIGN: MELANIE SNEDDEN	
	DRAWN: KEITH BRONSON	SITE MAP AND AREA MAP
	PROJECT NO. 020996	
	SPEC CODE	
DESIGN PHASE: AFC	FOR REVIEW/APPROVAL SIGNATURES SEE DAR NO. 88704	SIZE D · CAGE CODE 01MF3 · INDEX CODE NUMBER AREA 200 TYPE 0100 SQ 38 DWG 090 · DWG-520002 · REV
SAFETY CATEGORY: LSC	EFFECTIVE DATE: 9/18/2002	SCALE: NOTED · SHEET T-1

Layout Name: 520002
Date: 01/30/02 - 8:44 P.M.

File: 520002.dwg
Path: G:\Mar\SSSTF

REVISIONS		
REV	DESCRIPTION	EFFECTIVE DATE:

DRAWING INDEX

PAGE NO.	DWG NO.	A-E SH NO.	REV	DRAWING TITLE
1	520002	T-1		SITE MAP AND AREA MAP
2	520003	T-2		DRAWING INDEX
3	520004	T-3		SITE PERSPECTIVE
4	520005	C-1		SURVEY CONTROL POINT PLAN
5	520006	C-2		SITE PLAN
6	520007	C-3		ROAD SECTION, PROFILE SECTIONS AND STRIPING DETAILS
7	520008	C-4		ACCESS ROAD STATIONING, PROFILE AND SECTIONS
8	520009	U-1		OVERALL UTILITIES PLAN FROM INTEC
9	520010	U-2		PLAN AND PROFILE 10+12.91-12+80
10	520011	U-3		PLAN AND PROFILE 12+80-15+70
11	520012	U-4		PLAN AND PROFILE 15+70-18+49.98
12	520013	U-5		PLAN AND PROFILE 18+49.98-20+13.03
13	520014	U-6		PLAN AND PROFILE 20+44.98-25+21.30
14	520015	U-7		PLAN AND PROFILE 25+21.30-26+67.67
15	520016	U-8		PLAN AND PROFILE 22+68.82-25+20
16	520017	U-9		PLAN AND PROFILE 25+20-28+00
17	520018	U-10		PLAN AND PROFILE 28+00-30+50
18	520019	U-11		PLAN AND PROFILE 30+50-31+82.71
19	520020	U-12		OVERALL UTILITIES PLAN AT SSSTF AREA
20	520021	U-13		PLAN AND PROFILE 10+00-12+57.90 (TO ADMIN)
21	520022	U-14		PLAN AND PROFILE 10+00-12+70 (TO DECON)
22	520023	U-15		PLAN AND PROFILE 12+70-15+00 (FIRE MAIN)
23	520024	U-16		PLAN AND PROFILE 10+100-12+50 (N/S DUCT BANK)
24	520025	U-17		PLAN AND PROFILE 12+50-14+34 (N/S DUCT BANK)
25	520026	U-18		PLAN AND PROFILE 11+00-12+00 (WASTE WATER)
26	520027	U-19		PLAN AND PROFILE 12+00-13+59.46 (WASTE WATER)
27	520028	U-20		DETAILS AND SECTIONS
28	520029	U-21		DUCT BANK DETAILS
29	520030	U-22		DETAILS AND SECTIONS
30	520031	U-23		DETAILS AND SECTIONS
31	520032	U-24		ENLARGED PLAN, SECTION, AND DETAILS
32	520033	U-25		DETAILS AND SECTION
33	520034	U-26		SECTIONS AND DETAILS
34	520035	A-1		DECON BUILDING FLOOR PLAN
35	520036	A-2		DECON BUILDING ELEVATIONS
36	520037	A-3		DECON BUILDING ELEVATIONS AND SECTIONS
37	520038	A-4		DECON BUILDING SECTIONS AND DETAILS
38	520039	A-5		SECTIONS AND DETAIL
39	520040	A-6		WALL SECTIONS
40	520041	A-7		DOOR AND ROOM FINISH SCHEDULES
41	520042	A-8		DOOR, WINDOW, AND LOUVER DETAILS
42	520043	A-9		ENLARGED PLAN - RESTROOM AND ELEVATIONS
43	520044	A-10		REFLECTED CEILING PLAN
44	550045	A-11		ELEVATIONS, DETAILS, AND SECTION
45	520046	S-1		ADMINISTRATION BUILDING FOUNDATION PLAN
46	520047	S-2		DECON BLDG FOUNDATION AND PAD PLAN
47	520048	S-3		SECTIONS AND DETAILS
48	520049	S-4		POST-TENSIONING PLAN AND SECTION
49	520050	S-5		DETAILS AND SECTIONS
50	520051	S-6		TRUCK SCALE PAD PLAN AND SECTIONS
51	520052	P-1		PLUMBING DIAGRAMS AND LEGEND
52	520053	P-2		WATER PIPING FLOOR PLAN, SECTION, AND DETAILS
53	520054	P-3		SANITARY SEWER AND SERVICE WASTE FLOOR PLAN
54	520055	FP-1		DECON BLDG FIRE PROTECTION PLANS
55	520056	FP-2		SECTION AND DETAILS
56	520057	FP-3		SECTION AND DETAILS
57	520058	HV-1		DECON BLDG H & V FLOW DIAGRAM
58	520059	HV-2		DECON BLDG H & V FLOOR PLAN
59.	520060	HV-3		VIEW AND SECTIONS
60	520061	HV-4		DETAILS AND EQUIPMENT SCHEDULE

DRAWING INDEX

PAGE NO.	DWG NO.	A-E SH NO.	REV	DRAWING TITLE
61	520062	E-1		DECON BLDG ONE LINE DIAGRAM
62	520063	E-2		PLAN VIEW
63	520064	E-3		DECON BUILDING GROUNDING PLAN AND DETAILS
64	520065	E-4		DECON BUILDING POWER PLAN
65	520066	E-5		DECON BLDG H & V POWER PLAN
66	520067	E-6		DECON BUILDING LIGHTING PLAN
67	520068	E-7		FIXTURE SCHEDULE AND ENLARGED PLAN
68	520069	E-8		PANEL SCHEDULES
69	520070	E-9		ENLARGED PLAN, VIEWS AND DIAGRAM
70	520071	E-10		VIEWS, SECTION AND DETAIL
71	520072	E-11		ENLARGED VIEW AND DETAIL
72	520073	E-12		POWER POLE AND ANCHOR DETAILS
73	520074	E-13		POWER POLE DETAILS
74	520075	E-14		ENLARGED PLAN AND SECTIONS
75	520076	E-15		POWER PANEL AND TRANSFORMER VIEW
76	520077	E-16		CONCRETE PAD DETAILS
77	520078	E-17		PLOT PLAN
78	520079	E-18		FIBER AND PHONE CABLE ROUTING ENLARGED VIEW, SECTION AND PHOTO
79	520080	E-19		FIBER AND PHONE CABLE ROUTING ENLARGED VIEWS
80	520081	E-20		FIBER AND PHONE CABLE ROUTING ENLARGED VIEWS AND SECTION
81	520082	E-21		ENLARGED PLAN AND VIEWS
82	520083	E-22		VOICE/DATA/DATA OULET FLOOR PLAN
83	520084	E-23		ENLARGED PLAN AND VIEW
84	520085	E-24		DECON BUILDING VOICE OUTLET FLOOR PLAN
85	520086	E-25		VOICE/DATA VIEWS AND SECTIONS
86	520087	IN-1		DECON BLDG INSTRUMENTATION FLOOR PLAN
87	520088	IN-2		SECTIONS
88	520089	IN-3		SECTIONS
89	520090	IN-4		DETAILS
90	520091	IN-5		LOOP DIAGRAM
91	520092	IN-6		LOOP DIAGRAM
92	520093	IN-7		LOOP DIAGRAM
93	520094	LSS-1		ENLARGED PLAN AND DETAILS
94	520095	LSS-2		ADMIN BUILDING FLOOR PLAN
95	520096	LSS-3		DECON BUILDING FLOOR PLAN
96	520097	LSS-4		RISER DIAGRAMS AND LEGEND
	520110	XREF		SSSTF PLAN
	520111	XREF		ADMIN TRAILER
	520112	XREF		DECON BUILDING

FOR DRAWING INDEX SEE DRAWING NO. 520003	SUBCONTRACT NO.	INEEL BECHTEL BWXT IDAHO, LLC
NO SCALE	REQUESTER: S.A. DAVIES DESIGN: C. KINGSFORD DRAWN: S. VALENTINE PROJECT NO. 020996 SPEC CODE	INTEC STAGING, STORAGE, SIZING AND TREATMENT FACILITY DRAWING INDEX
DESIGN PHASE: AFC	FOR REVIEW/APPROVAL SIGNATURES SEE DAR NO. 88704	SIZE D · CAGE CODE 01MF3 · INDEX CODE NUMBER AREA 200 TYPE 9999 CL 01 ORG 090 · DWG-520003 · REV
SAFETY CATEGORY: LSC	EFFECTIVE DATE: 3/11/2002	SCALE: NONE · SHEET T-2

File: 520003.dwg Path: G:\kbr\SSSTF
Layout Name: 520003 Date: 03/05/02 - 3:27 P.M. ID: MBC

REVISIONS		
REV	DESCRIPTION	EFFECTIVE DATE:

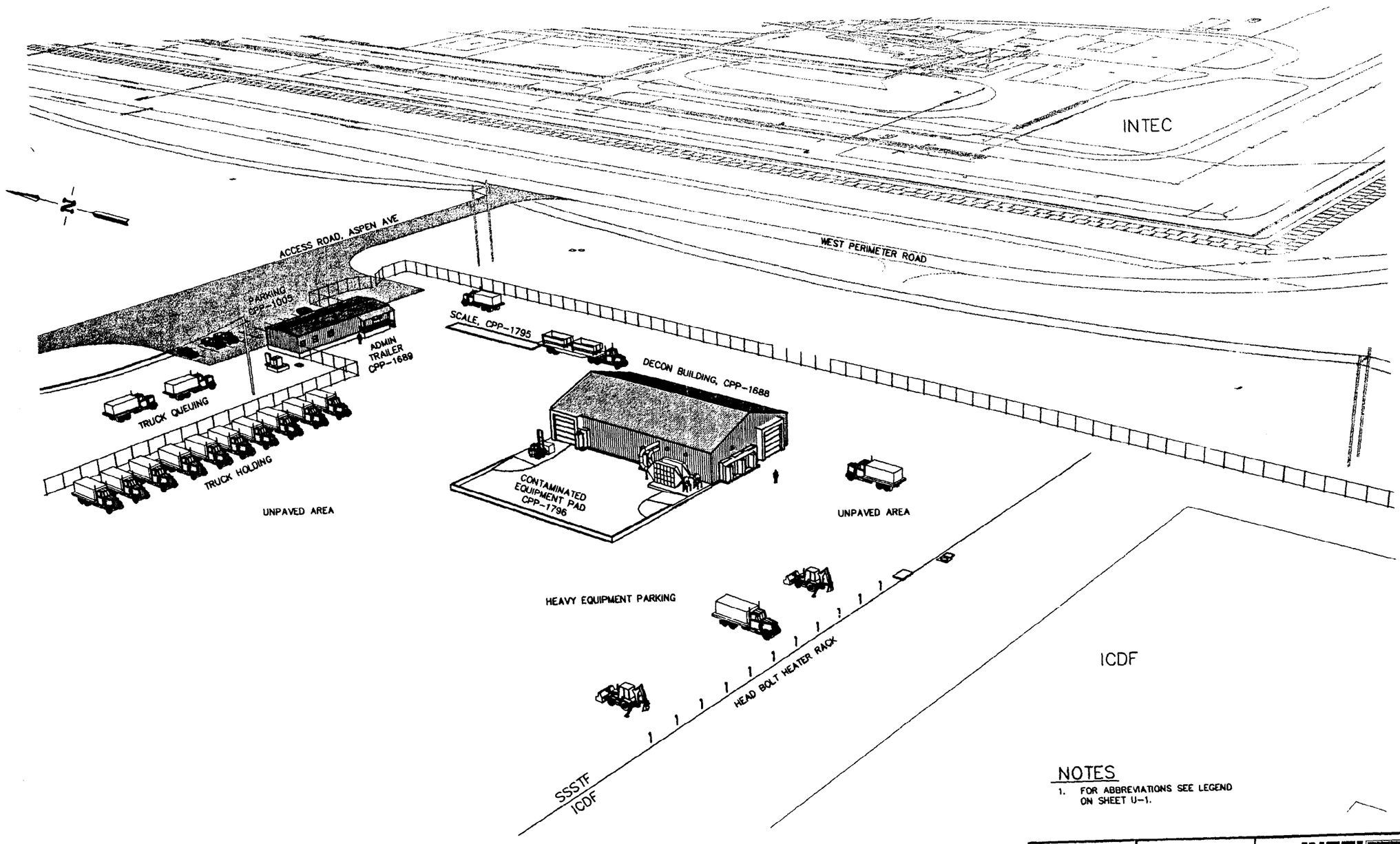

PERSPECTIVE VIEW

NOTES

1. FOR ABBREVIATIONS SEE LEGEND ON SHEET U-1.

REGISTERED PROFESSIONAL ENGINEER 2104 4-01-02 STATE OF IDAHO CLINTON O. KINGSFORD

FOR DRAWING INDEX SEE DRAWING NO. 520003	SUBCONTRACT NO.	INEEL BECHTEL BWXT IDAHO, LLC
NO SCALE	REQUESTER: S.A. DAVIES DESIGN: DIANNE NISHIOKA DRAWN: KEITH BRONSON PROJECT NO. 020996	INTEC STAGING, STORAGE, SIZING AND TREATMENT FACILITY SITE PERSPECTIVE
	SPEC CODE	
DESIGN PHASE: AFC	FOR REVIEW/APPROVAL SIGNATURES SEE DAR NO. 88704	SIZE D; CAGE CODE 01MF3; INDEX CODE NUMBER AREA 200, TYPE 0100, Q 01, SEQ 090; DWG-520004; REV
SAFETY CATEGORY: LSC	EFFECTIVE DATE: 3/6	SCALE: NONE; SHEET T-3

FMT-01-REV 3.3

File: 520004.dwg
Path: G:\dbx\SSSTF
JC
Layout Name: 520004
Date: 02/07/02 - 09:41 A.M.

REVISIONS		
REV	DESCRIPTION	EFFECTIVE DATE:

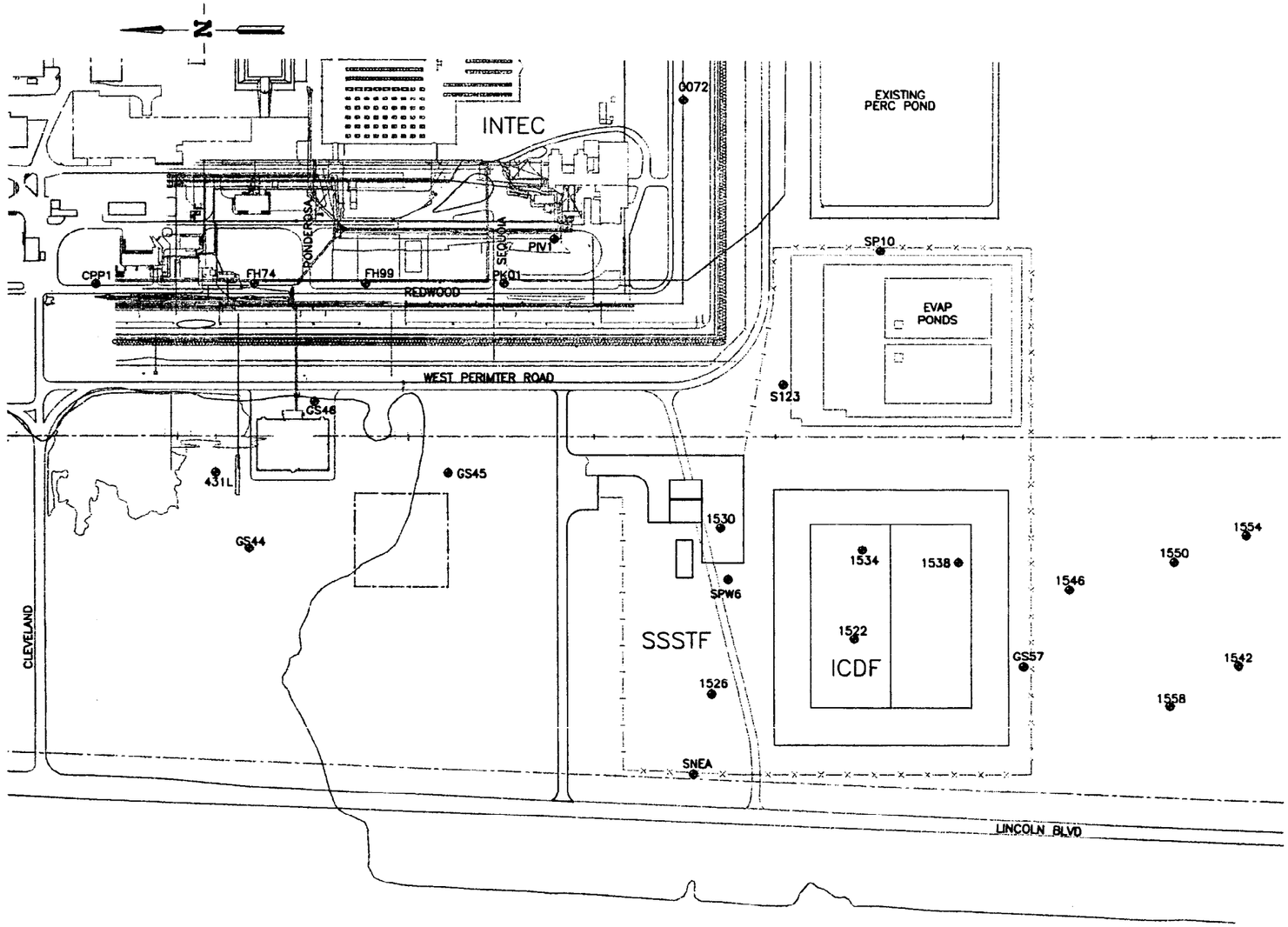

SURVEY CONTROL POINT PLAN

SURVEY CONTROL POINTS

CONTROL POINT	PROJECT NORTHING	PROJECT EASTING	NGVD29 EL	DESCRIPTION
431L	694,511.411	295,564.809	4916.75	NGS MARK 431L
GS44	694,404.238	295,322.332	4917.91	USGS 44 WELL BRASS CAP
GS45	693,766.766	295,565.347	4919.04	USGS 45 WELL BRASS CAP
GS46	694,191.874	295,796.200	4919.14	USGS 46 WELL BRASS CAP
GS57	691,919.716	294,942.147	4922.50	USGS 57 WELL BRASS CAP
S123	692,687.214	295,850.627	4919.22	USGS 123 WELL BRASS CAP
SP10	692,376.984	296,278.549	4917.89	SWPP 10 WELL BRASS CAP
SPW6	692,863.690	295,222.085	4920.59	PW6 WELL BRASS CAP
FH99	694,030.040	296,173.391	4916.98	FIRE HYDRANT SOUTH OF PONDEROSA (R IN BURY)
CPP1	694,899.190	296,172.776	4915.83	CPP-MW-1 WELL BRASS CAP
FH74	694,387.874	296,173.127	4916.24	FIRE HYDRANT 1074 (R IN BURY)
PIV1	693,422.799	296,317.376	4920.25	X IN TOP OF PIV
PK01	693,583.668	296,173.904	4917.99	PK NAIL
SNEA	692,976.235	294,598.713	4922.12	SNEAK REBAR WITH YELLOW CAP
0072	693,011.989	296,763.803	-----	SURVEY CONTROL MONUMENT
1522	692,460.216	295,031.327	4921.96	SPT-2 BRASS CAP (ICPP-BOR-S-181)
1526	692,917.904	294,853.695	4921.63	SPT-1 BRASS CAP (ICPP-BOR-S-180)
1530	692,888.161	295,389.972	4919.28	CHEMB-1 BRASS CAP (ICPP-BOR-S-175)
1534	692,433.242	295,318.933	4921.24	GSB-1 BRASS CAP (ICPP-BOR-S-178)
1538	692,127.506	295,277.940	4920.93	CHEMB-2 BRASS CAP (ICPP-BOR-S-176)
1542	691,235.020	294,947.685	4923.10	CHEMB-3 BRASS CAP (ICPP-BOR-S-177)
1546	691,774.790	295,190.788	4921.91	SPT-3 BRASS CAP (ICPP-BOR-S-182)
1550	691,441.621	295,281.496	4922.06	GSB-2 BRASS CAP (ICPP-BOR-S-179)
1554	691,209.551	295,369.285	4922.68	SPT-5 BRASS CAP (ICPP-BOR-S-184)
1558	691,455.055	294,816.564	4923.17	SPT-4 BRASS CAP (ICPP-BOR-S-183)

NOTES

1. PROJECT COORDINATES ARE BASED ON NAD27 IDAHO EAST ZONE STATE PLANE, CORRECTED FOR ELEVATION AND GRID. TO CONVERT PROJECT COORDINATES TO STATE PLANE, DIVIDE PROJECT COORDINATES BY 1.00024057.
2. VERTICAL DATUM IS NGVD29.
3. FOR MORE INFORMATION ON COORDINATE SYSTEMS SEE EDF-1853.

REGISTERED PROFESSIONAL ENGINEER - LAND SURVEYOR
STATE OF IDAHO
CLINTON G. KINGSFORD
3-01-02

FOR DRAWING INDEX SEE DRAWING NO. 520003	SUBCONTRACT NO.
200' 100' 50' 0 200' SCALE: 1" = 200.0'	REQUESTER: S.A. DAVIES
	DESIGN: MELANIE SNEDDEN
	DRAWN: KEITH BRONSON
	PROJECT NO. 020996
	SPEC CODE
DESIGN PHASE: AFC	FOR REVIEW/APPROVAL SIGNATURES SEE DAR NO. 88704
SAFETY CATEGORY: LSC	EFFECTIVE DATE: 3/11/2002

INEEL BECHTEL BWXT IDAHO, LLC

INTEC
STAGING, STORAGE, SIZING
AND TREATMENT FACILITY

SURVEY CONTROL POINT PLAN

SIZE	CAGE CODE	INDEX CODE NUMBER AREA	TYPE	CL	ORIG	DWG-	REV
D	01MF3	200	0100	02	090	520005	

SCALE: 1"=200' SHEET C-1

Layout Name: 520005
Date: 01/29/02 - 08:18 A.M.
File: 520005.dwg
Path: G:\dbr\SSSTF

REV	DESCRIPTION	EFFECTIVE DATE:

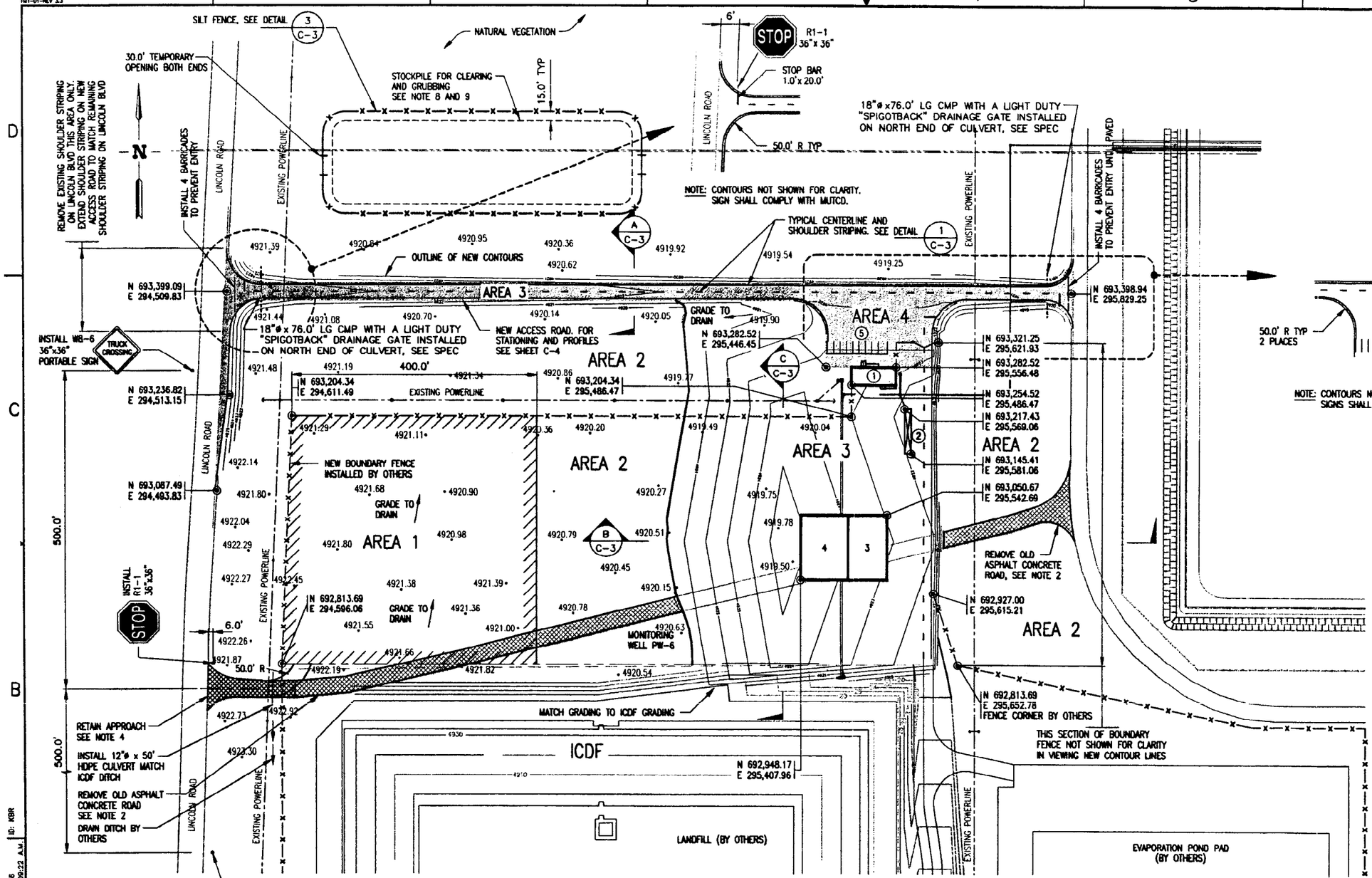

SSSTF SITE PLAN

SCALE: 1"=80.0'

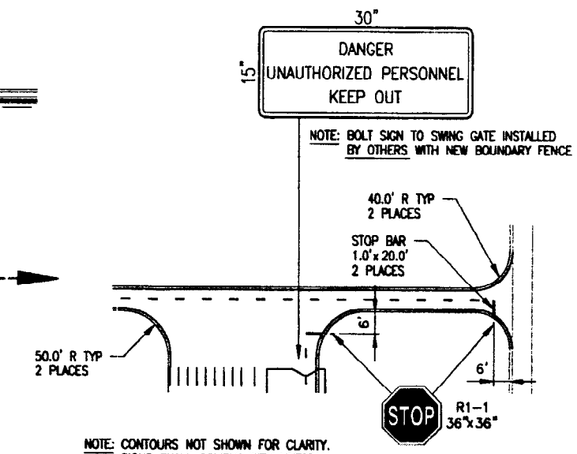

LEGEND

- AREA 1 = CLEAR & GRUB) CONSTRUCTION PARKING AND LAYDOWN AREA FILL W/1.0'-2.0' PITRUN GRAVEL
- AREA 2 = MAINTAIN NATURAL VEGETATION
- AREA 3 = CLEAR & GRUB, ROAD & SSSTF SITE)
- AREA 4 ASPHALT CONCRETE AREA
- REMOVE OLD ROAD
- •49XX.XX EXISTING ELEVATION
- 49XX NEW CONTOURS
- MUTCD MANUAL ON UNIFORM TRAFFIC CONTROL DEVICES
- (X) NEW BUILDING OR PAD DESIGNATION: (FUTURE)
  1. ADMINISTRATION TRAILER
  2. TRUCK SCALE
  3. DECONTAMINATION BUILDING
  4. CONTAMINATED EQUIPMENT PAD 102.5' X 73.0'
  5. ADMINISTRATION PARKING AREA: FOR STRIPING SEE DETAIL 2 C-3

NOTES

1. RETAIN AND PROTECT ALL EXISTING FACILITIES UNLESS OTHERWISE NOTED.
2. REMOVE EXISTING ASPHALT SURFACING AND HAUL TO CFA LANDFILL. BLEND REMAINING FILL TO NATURAL TERRAIN.
3. PROJECT COORDINATES ARE BASED ON NAD27 IDAHO EAST ZONE STATE PLANE, CORRECTED FOR ELEVATION AND GRID. VERTICAL DATUM IS NGVD29. TO CONVERT PROJECT COORDINATES TO STATE PLANE COORDINATES, DIVIDE PROJECTS COORDINATES BY 1.00024057. REF EDF-1853
4. PROVIDE TEMPORARY ROAD TO PARKING AND LAYDOWN AREA 1 AS DIRECTED. REMOVE WHEN SSSTF WORK IS COMPLETE
5. SEE SPECIFICATIONS FOR GRADING DETAILS OF AREAS.
6. REMOVE PORTABLE SIGNS AFTER CONSTRUTION.
7. EXCAVATED OVERBURDEN MATERIAL WILL BE PLACED IN THE ICDF STOCKPILE.
8. STOCKPILE SHALL BE NO HIGHER THAN 3.3 FEET ABOVE SURROUNDING GRADE. SIDE SLOPES SHALL BE 3:1 OR FLATTER.
9. SCARIFY AND RESEED WHEN CONSTRUCTION IS COMPLETE.
10. SEE SPECIFICATIONS FOR REVEGETATION REQUIREMENTS FOR ALL EXPOSED SLOPES AND DISTURBED AREAS INCLUDING AREA 1.

REGISTERED PROFESSIONAL ENGINEER - LAND SURVEYOR 2104 STATE OF IDAHO CLINTON O. KINGSFORD 3-01-02

FOR DRAWING INDEX SEE DRAWING NO. 520003	SUBCONTRACT NO.
SCALE: 1" = 80.0'	REQUESTER: S.A. DAVIES
	DESIGN: C.O. KINGSFORD
	DRAWN: B.SEARLE
	PROJECT NO. 020996
	SPEC CODE
DESIGN PHASE: AFC	FOR REVIEW/APPROVAL SIGNATURES SEE DAR NO. 88704
SAFETY CATEGORY: LSC	EFFECTIVE DATE: 3/11/2002

INEEL BECHTEL BWXT IDAHO, LLC

INTEC
STAGING, STORAGE, SIZING AND TREATMENT FACILITY

SITE PLAN

SIZE	CAGE CODE	INDEX CODE NUMBER: AREA	TYPE	CL	ORG	DWG-520006	REV
D	01MF3	200	0100	01	090		

SCALE: 1"=80.0' SHEET C-2

File: 520006.dwg Path: K:\SSSTF Layout Name: 520006 Date: 03/06/02 - 09:22 A.M. ID: KBR

REVISIONS		
REV	DESCRIPTION	EFFECTIVE DATE:

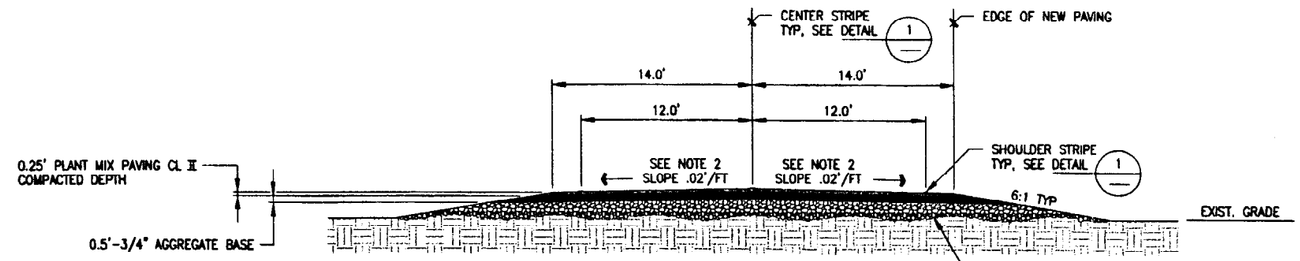

STATION 0+00 – 8+36.62

ROAD SECTION (A/– A/C-2 A/C-4)
SCALE: 1"=5.0'

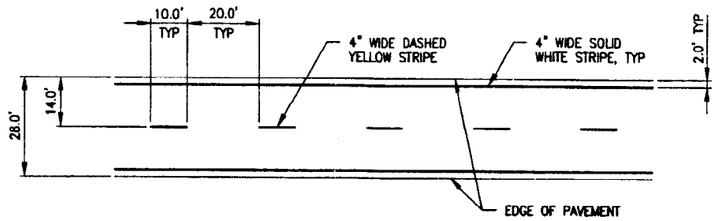

STRIPING DETAIL (1/– 1/C-2)
SCALE: 1"=20.0'

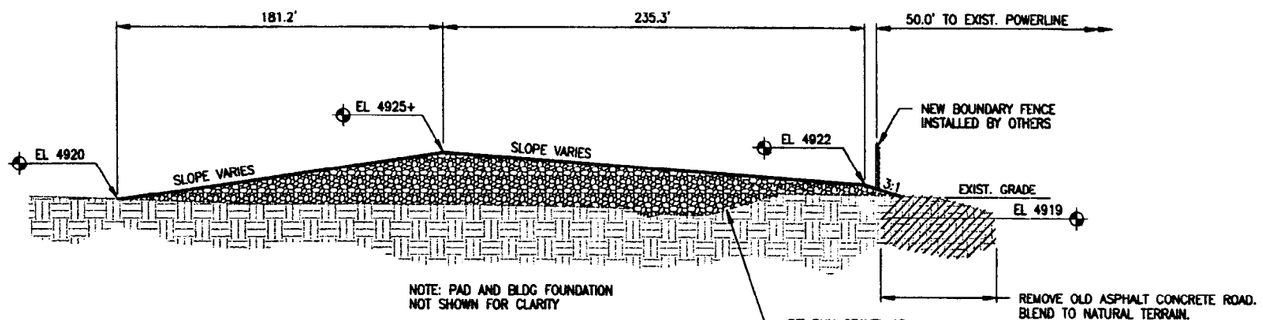

PROFILE SECTION (B/C-2)
SCALE: 1"=40.0'

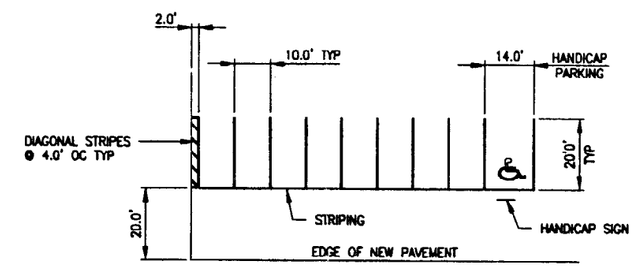

STRIPING DETAIL (2/C-2)
SCALE: 1"=20.0'
SEE NOTE 1

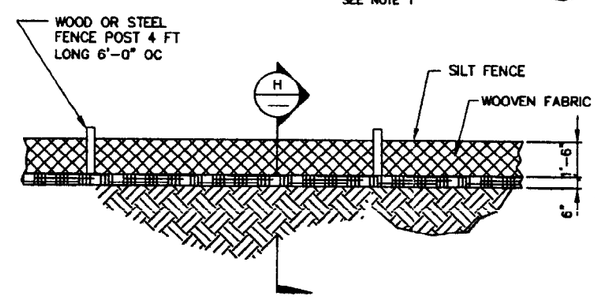

SILT FENCE (C/C-2)
SCALE: 1"=3'-0"

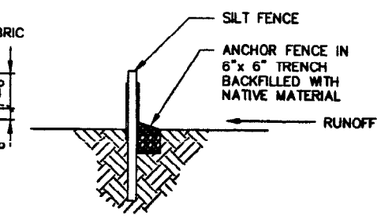

SECTION (H/–)
SCALE: 1"=3'-0"

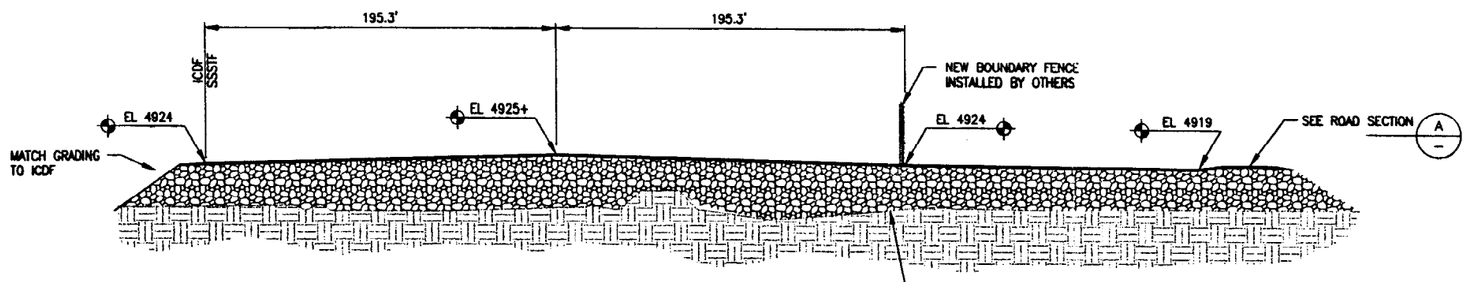

PROFILE SECTION (C/C-2)
SCALE: 1"=40.0'

NOTES

1. ALL STRIPING SHALL BE SAFETY YELLOW IN COLOR UNLESS OTHERWISE NOTED. ALL STRIPING SHALL BE A MINIMUM OF 4" WIDE UNLESS OTHERWISE NOTED.
2. TYPICAL SLOPES EXCEPT AS NOTED ON PROFILE SECTIONS F/C-4 G/C-4

REGISTERED PROFESSIONAL ENGINEER – LAND MOBILITY – STATE OF IDAHO – 2104 – 02-01-02 – CLINTON O. KINGSFORD

FOR DRAWING INDEX SEE DRAWING NO. 520003	SUBCONTRACT NO.	INEEL BECHTEL BWXT IDAHO, LLC
SCALE: 1" = 10.0'	REQUESTER: S.A. DAVIES DESIGN: C.O. KINGSFORD DRAWN: B.SEARLE	INTEC STAGING, STORAGE, SIZING AND TREATMENT FACILITY ROAD SECTION, PROFILE SECTIONS AND STRIPING DETAILS
	PROJECT NO. 020996	
	SPEC CODE	
DESIGN PHASE: AFC	FOR REVIEW/APPROVAL SIGNATURES SEE DAR NO. 88704	SIZE D · CAGE CODE 01MF3 · MODEL CODE NUMBER AREA 200 TYPE 0500 Q 02 ORG 090 · DWG-520007 · REV
SAFETY CATEGORY: LSC	EFFECTIVE DATE: 3/8/2002	SCALE: NOTED · SHEET C-3

FMT-01-REV 3.3

File: 520007.dwg
Path: G:\Kor\SSSTF
Layout Name: 520007
Date: 02/11/02 - 11:21 A.M.
ID: MBC

REVISIONS		
REV	DESCRIPTION	EFFECTIVE DATE:

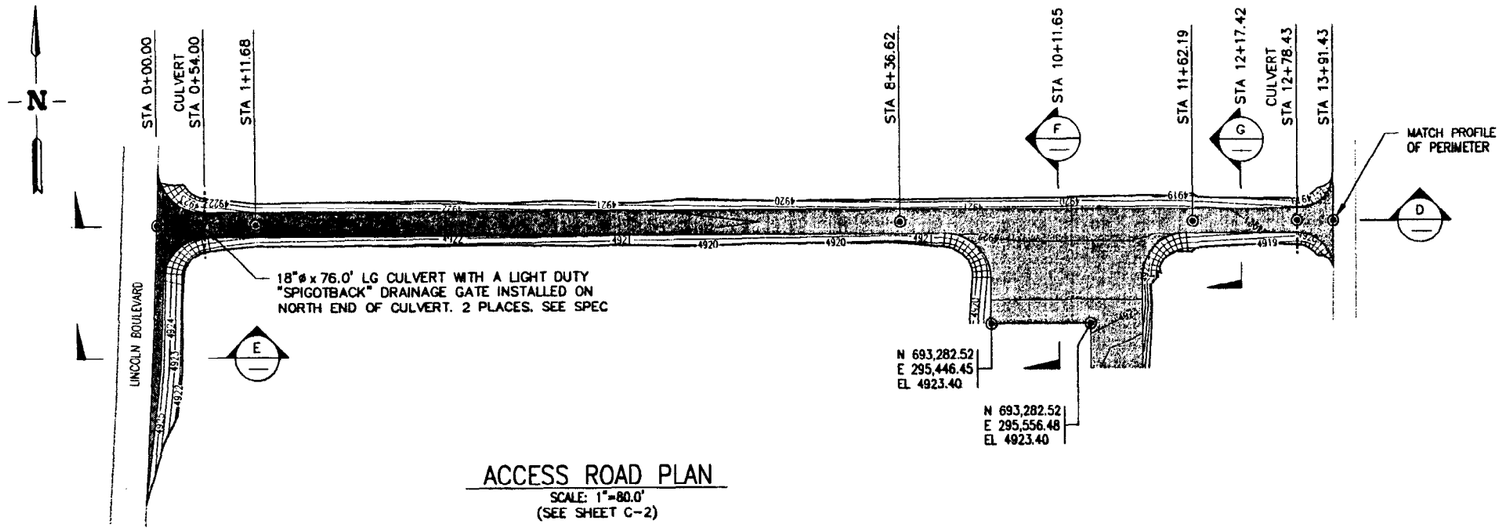

ACCESS ROAD PLAN

SCALE: 1"=80.0'
(SEE SHEET C-2)

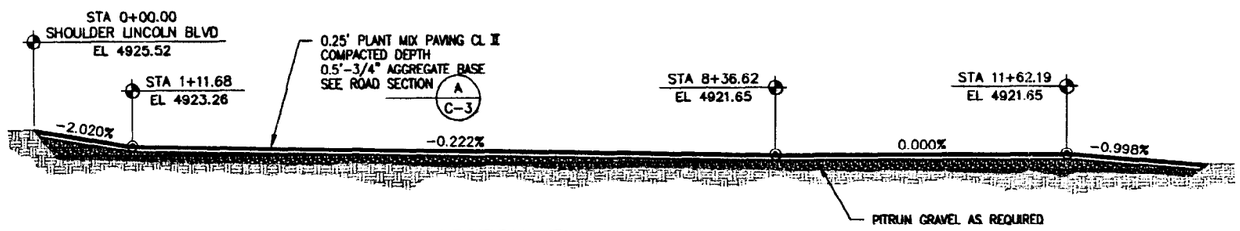

ROAD SECTION D

SCALE: 1"=80.0'
(PROFILE)

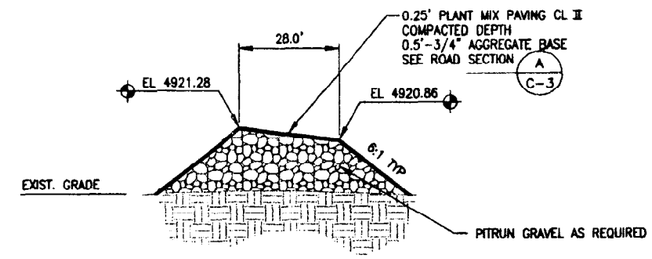

SECTION G

SCALE: NONE

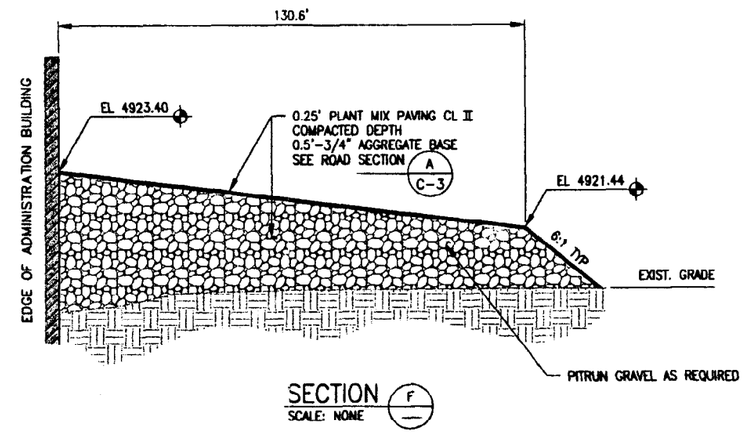

SECTION F

SCALE: NONE

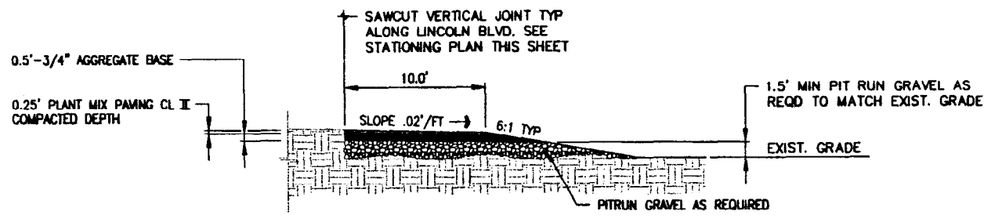

ROAD SECTION E

SCALE: 1"=5.0'

FOR DRAWING INDEX SEE DRAWING NO. 520003	SUBCONTRACT NO.	INEEL BECHTEL BWXT IDAHO, LLC
SCALE: 1" = 5.0' / SCALE: 1" = 80.0'	REQUESTER: S.J. DAVIES	INTEC STAGING, STORAGE, SIZING AND TREATMENT FACILITY ACCESS ROAD STATIONING, PROFILE AND SECTIONS
	DESIGN: C.O. KINGSFORD	
	DRAWN: B.SEARLE	
	PROJECT NO. 020996	
	SPEC CODE	
DESIGN PHASE: AFC	FOR REVIEW/APPROVAL SIGNATURES SEE DAR NO. 88704	SIZE D · CAGE CODE 01MF3 · INDEX CODE NUMBER AREA 200 TYPE 0500 Q 02 ORIG 090 · DWG-520008 · REV
SAFETY CATEGORY: LSC	EFFECTIVE DATE: 3/11/2002	SCALE: NOTED · SHEET C-4

REGISTERED PROFESSIONAL ENGINEER - LAND SURVEYOR 2104 STATE OF IDAHO 3.01.02 CLINTON O. KINGSFORD

FMT-01-REV 3.3

Layout Name: 520008 ID: MISC
Date: 02/07/02 - 12:06 P.M.
File: 520008.dwg
Path: G:\lab\SSSTF

REVISIONS		
REV	DESCRIPTION	EFFECTIVE DATE:

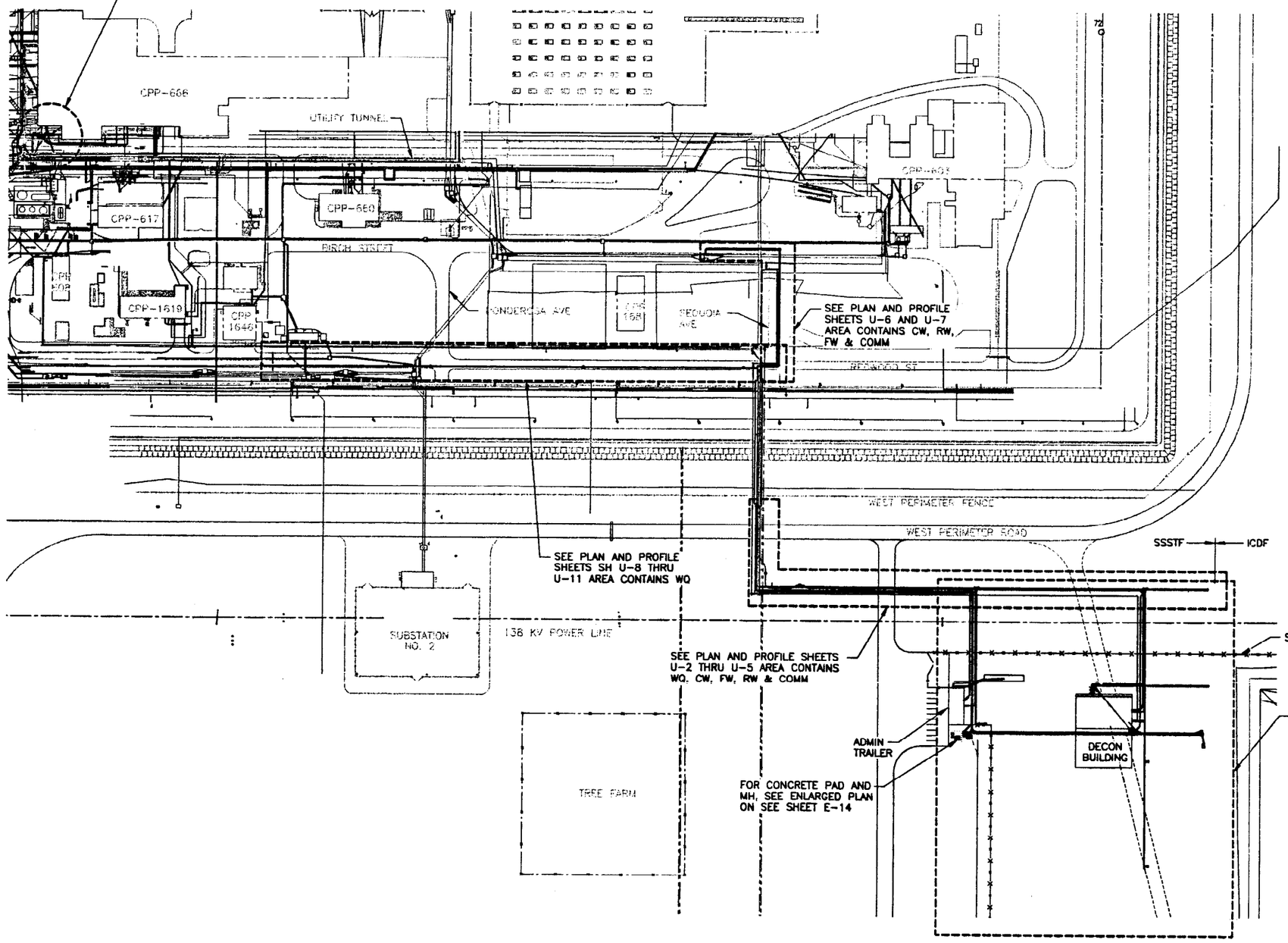

LEGEND

CMP	CORRUGATED METAL PIPE
CO	CLEANOUT
COMM	COMMUNICATIONS
CW	POTABLE WATER
CWV	POTABLE WATER VALVE
DB	DUCT BANK
ELEC	ELECTRICAL
FLG	FLANGE
FW	FIRE WATER
FWV	FIRE WATER VALVE
HH	HAND HOLE
ICDF	INEEL CERCLA DISPOSAL FACILITY
MAH	MANHOLE
NO	PVC
RW	RAW WATER
RWV	RAW WATER VALVE
SAA	SAA AREA
SSA	STAGING AND STORAGE AREA
SSSTF	STAGING, STORAGE, SIZING, AND TREATMENT FACILITY
SW	SERVICE WASTE
WQ	SANITARY SEWER
WQV	SANITARY SEWER VALVE
WW	WASTE WATER

NEW
EXISTING

NOTES

1. SEE SURVEY NOTES ON SHEET C-1 AND C-2.

XREF DRAWINGS
520110.dwg

OVERALL UTILITIES PLAN FROM INTEC

FOR DRAWING INDEX SEE DRAWING NO.	520003
SUBCONTRACT NO.	
REQUESTER:	S.A. DAVIES
DESIGN:	MELANIE SNEDDEN
DRAWN:	KEITH BRONSON
PROJECT NO.	020996
SPEC CODE	
FOR REVIEW/APPROVAL SIGNATURES SEE DAR NO. 88704	
EFFECTIVE DATE:	5/11/2002
DESIGN PHASE:	AFC
SAFETY CATEGORY:	LSC

SCALE: 1" = 100.0'

INDEX CODE NUMBER: AREA 200 | TYPE 0400 | CL 10 | GRID 090

INEEL
BECHTEL BWXT IDAHO, LLC

INTEC
STAGING, STORAGE, SIZING AND TREATMENT FACILITY

OVERALL UTILITIES PLAN FROM INTEC

SIZE	CAGE CODE	INDEX CODE NUMBER: AREA	TYPE	CL	GRID	DWG-	REV
D	01MF3	200	0200	52	090	520009	

SCALE: 1"=100.0' SHEET U-1

Layout Name: 520009
Date: 01/31/02 - 1:18 P.M.
File: 520009.dwg
Path: G:\Xdr\SSSTF

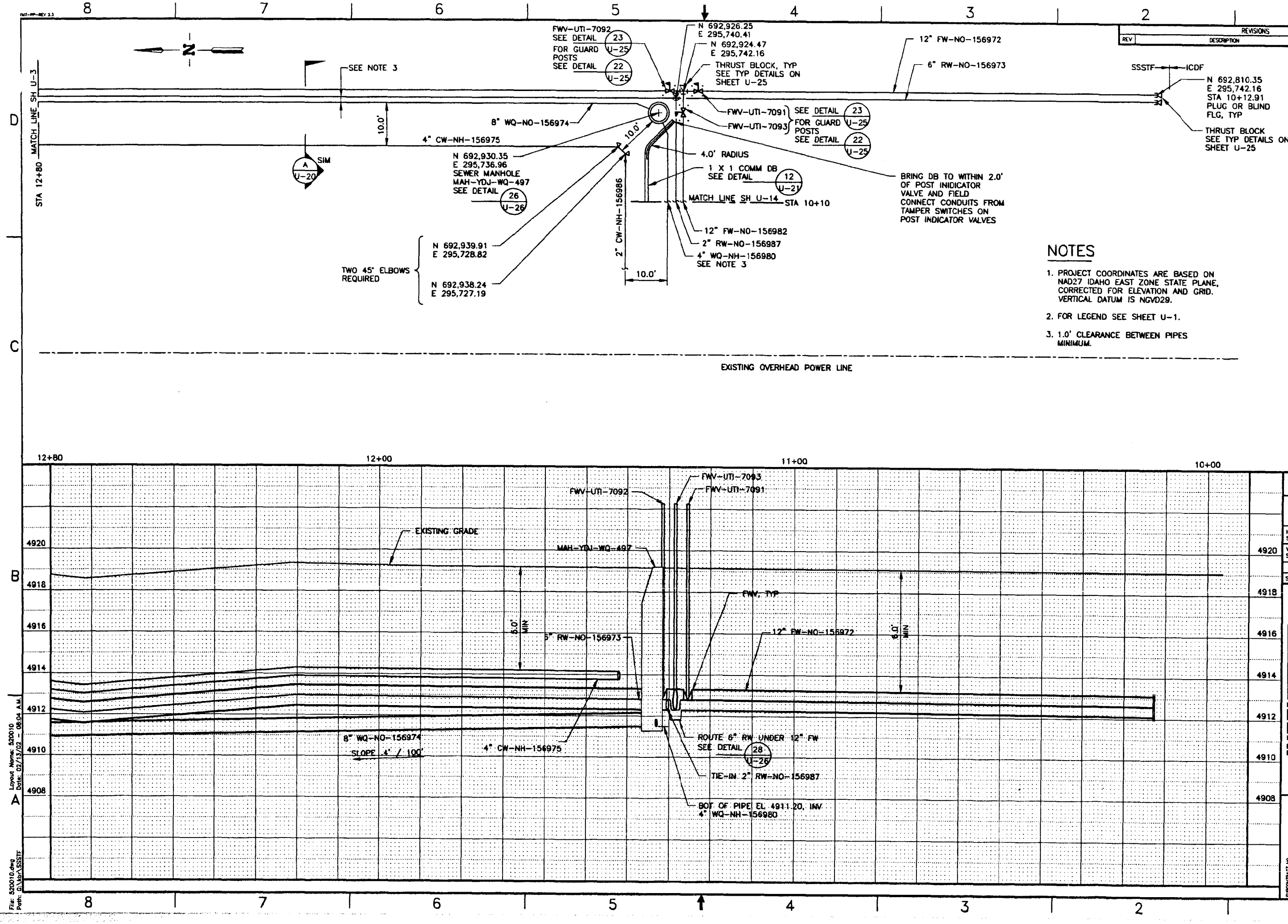

NOTES

1. PROJECT COORDINATES ARE BASED ON NAD27 IDAHO EAST ZONE STATE PLANE, CORRECTED FOR ELEVATION AND GRID. VERTICAL DATUM IS NGVD29.
2. FOR LEGEND SEE SHEET U-1.
3. 1.0' CLEARANCE BETWEEN PIPES MINIMUM.

REV	DESCRIPTION	EFFECTIVE DATE:

REVISIONS

XREF DRAWINGS
520110.dwg

FOR DRAWING INDEX SEE DRAWING NO. 520003

SCALE: 1" = 10.0'

HORIZONTAL SCALE 1"=10.0'
VERTICAL SCALE 1"=2.0'
DESIGN PHASE: AFC
SAFETY CATEGORY: LSC

INEEL

INTEC STAGING, STORAGE, SIZING AND TREATMENT FACILITY

PLAN AND PROFILE 10+12.91-12+80

SIZE D | CAGE CODE 01MF3 | DRAWING NUMBER 200 | 0200 | 52 | 090 | DWG- 520010 | REV | SHEET U-2

SCALE: SEE HORIZONTAL & VERTICAL

SUBCONTRACT NO.
REQUESTOR: S.A. DAVIES
DESIGN: M.S. SNEDDEN
DRAWN: KEITH BRONSON
PROJECT NO. 020996
SPEC CODE
FOR REVIEW/APPROVAL SIGNATURES SEE DAR NO. 88704
EFFECTIVE DATE: 8/1/2002

REGISTERED PROFESSIONAL ENGINEER CLINTON O. KINGSFORD 5-2104 2-07-02 STATE OF IDAHO

Layout Name: 520010
Date: 02/13/02 - 08:04 A.M.
File: 520010.dwg
Path: G:\Mbr\SSSTF

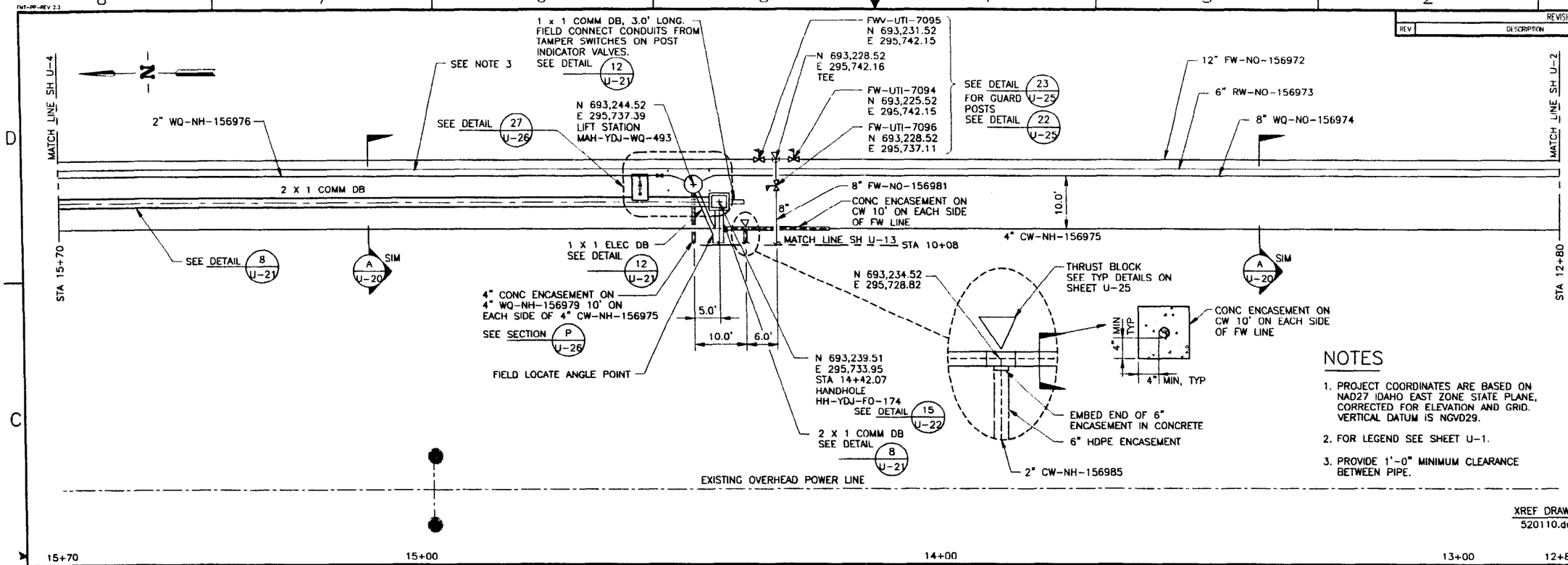

NOTES

1. PROJECT COORDINATES ARE BASED ON NAD27 IDAHO EAST ZONE STATE PLANE, CORRECTED FOR ELEVATION AND GRID. VERTICAL DATUM IS NGVD29.
2. FOR LEGEND SEE SHEET U-1.
3. PROVIDE 1'-0" MINIMUM CLEARANCE BETWEEN PIPE.

XREF DRAWINGS
520110.dwg

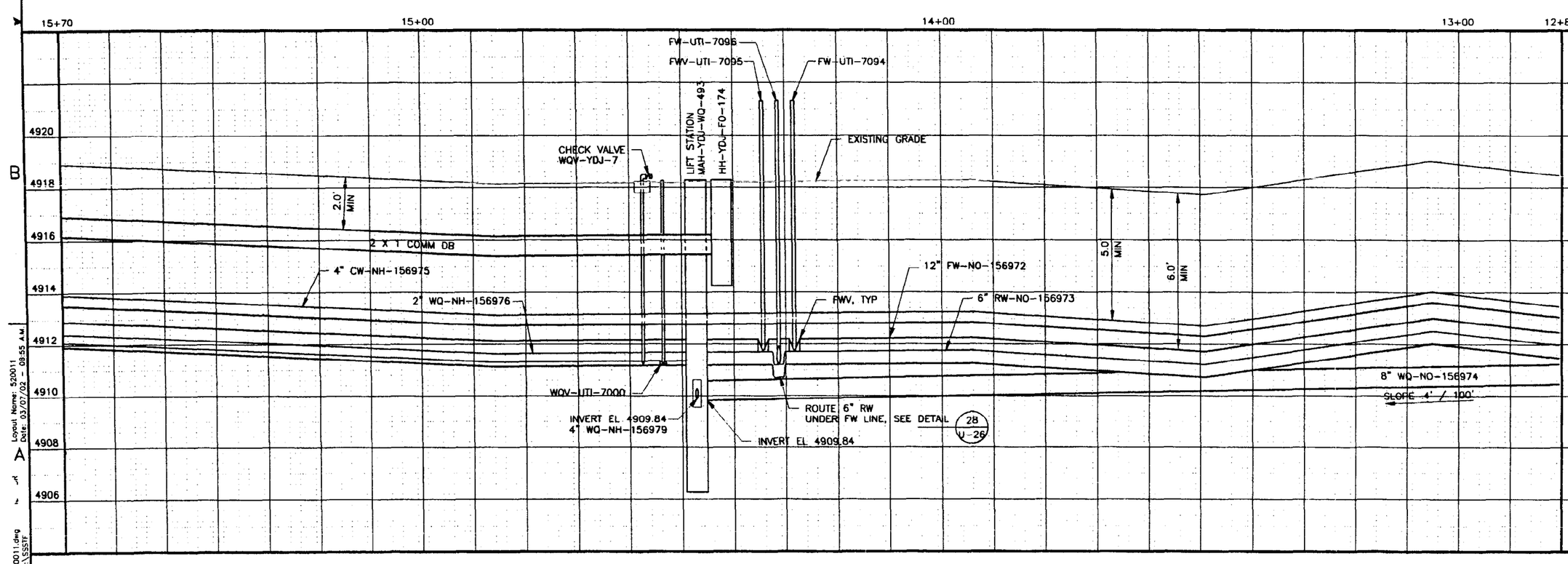

REVISIONS		
REV	DESCRIPTION	EFFECTIVE DATE

INDEX CODE NUMBER			
AREA	TYPE	CL	ORIG
200	0400	10	090

FOR DRAWING INDEX SEE DRAWING NO. 520003

SCALE: 1" = 10.0'

HORIZONTAL SCALE 1"=10.0'
VERTICAL SCALE 1"=2.0'
DESIGN PHASE: AFC
SAFETY CATEGORY: LSC

INEEL
INTEC
STAGING, STORAGE, SIZING AND TREATMENT FACILITY
PLAN AND PROFILE 12+80-15+70
SIZE D FACE CODE 01MF3 DWG- 520011 REV SHEET U-3
SCALE: SEE HORIZONTAL & VERTICAL

SUBCONTRACT NO.
REQUESTER S.A. DAVIES
DESIGN M.S. SNEDDEN
DRAWN KEITH BRONSON
PROJECT NO. 020996
SPEC CODE
FOR REVIEW/APPROVAL SIGNATURES
SEE DWR NO. 887/04
EFFECTIVE DATE 3/4/2002

Layout Name: 520011
Date: 03/07/02 - 08:55 A.M.
File: 520011.dwg
Path: K:\LSSTF

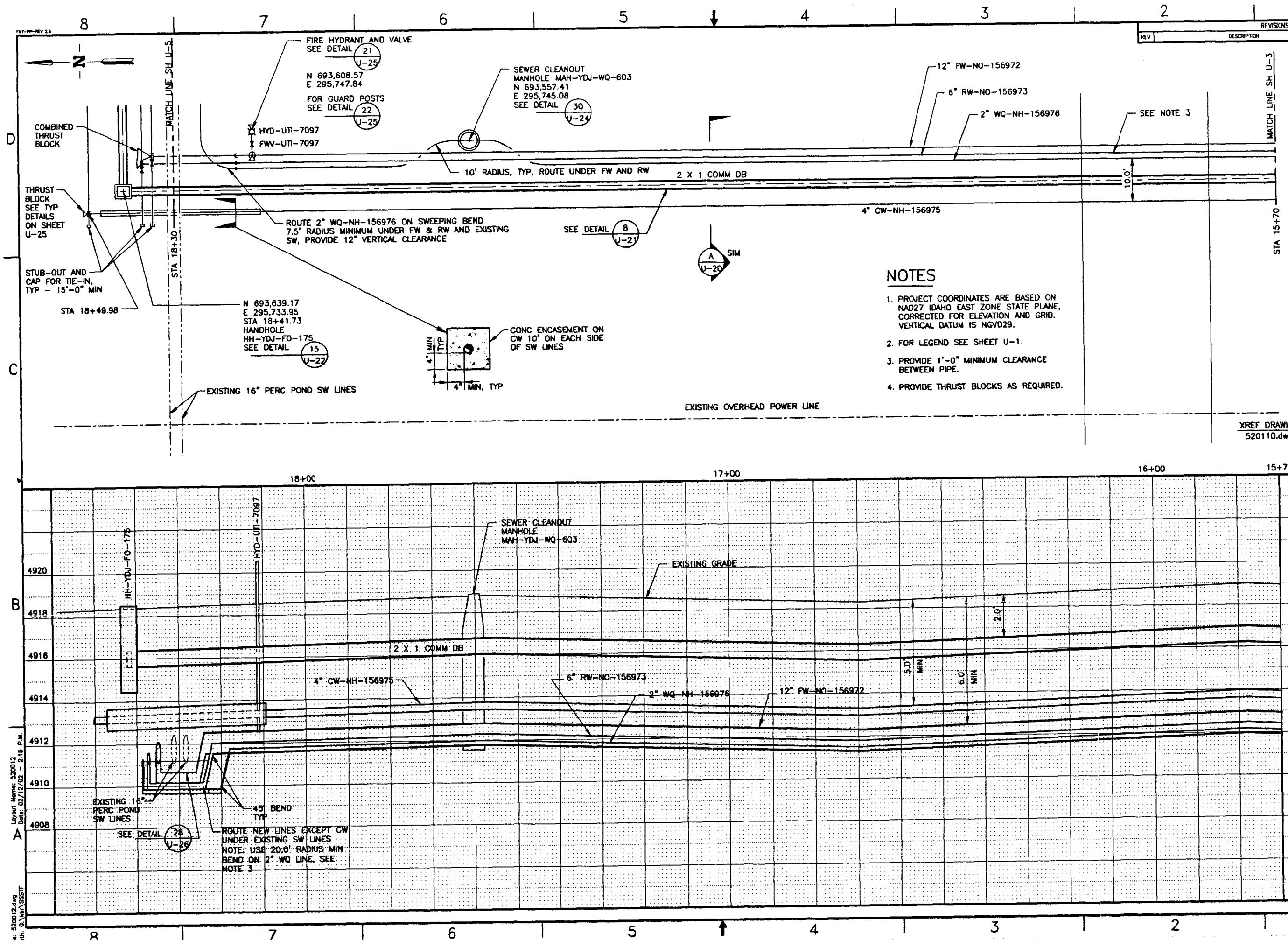

NOTES

1. PROJECT COORDINATES ARE BASED ON NAD27 IDAHO EAST ZONE STATE PLANE, CORRECTED FOR ELEVATION AND GRID. VERTICAL DATUM IS NGVD29.
2. FOR LEGEND SEE SHEET U-1.
3. PROVIDE 1'-0" MINIMUM CLEARANCE BETWEEN PIPE.
4. PROVIDE THRUST BLOCKS AS REQUIRED.

REVISIONS

REV	DESCRIPTION	EFFECTIVE DATE:

INDEX CODE NUMBER

AREA	TYPE	CL	ORIG
200	0400	10	090

FOR DRAWING INDEX SEE DRAWING NO. 520003

SCALE: 1" = 10.0'

HORIZONTAL SCALE 1"=10.0'

VERTICAL SCALE 1"=2.0'

DESIGN PHASE: AFC

SAFETY CATEGORY: LSC

INEEL

INTEC STAGING, STORAGE, SIZING AND TREATMENT FACILITY

PLAN AND PROFILE 15+70-18+49.98

SIZE D | CODE 01MF3 | INDEX CODE NUMBER AREA 200 TYPE 0200 CL 52 ORIG 090 | DWG. 520012 | REV | SHEET U-4

SCALE: SEE HORIZONTAL & VERTICAL

SUBCONTRACT NO.

REQUESTER: S.A. DAVIES

DESIGN: M.S. SNEDDEN

DRAWN: KEITH BRONSON

PROJECT NO. 020996

SPEC CODE

FOR REVIEW/APPROVAL SIGNATURES

SEE DAR NO. 88704

EFFECTIVE DATE: 9/9/2002

Layout Name: 520012
Date: 02/12/02 - 2:15 P.M.

File: 520012.dwg
Path: C:\var\SSSTF

REVISIONS		
REV	DESCRIPTION	EFFECTIVE DATE:

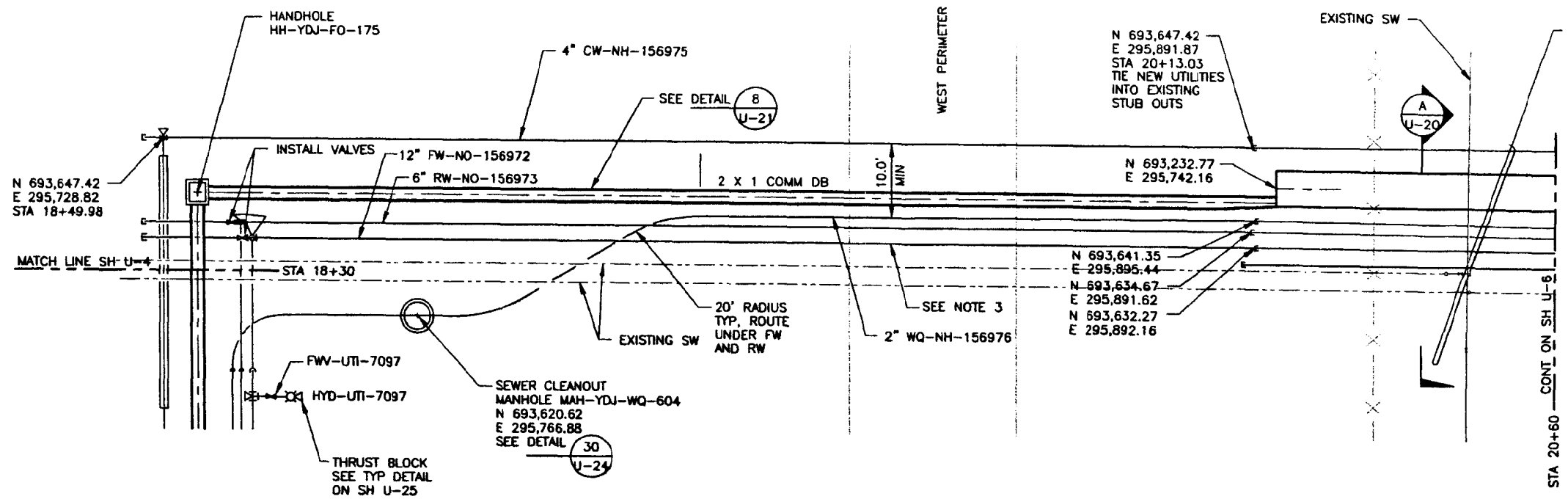

NOTES

1. PROJECT COORDINATES ARE BASED ON NAD27 IDAHO EAST ZONE STATE PLANE, CORRECTED FOR ELEVATION AND GRID. VERTICAL DATUM IS NGVD29.
2. FOR LEGEND SEE SHEET U-1.
3. PROVIDE 1'-0" CLEARANCE BETWEEN PIPE EXCEPT AS SHOWN.

XREF DRAWINGS
520110.dwg

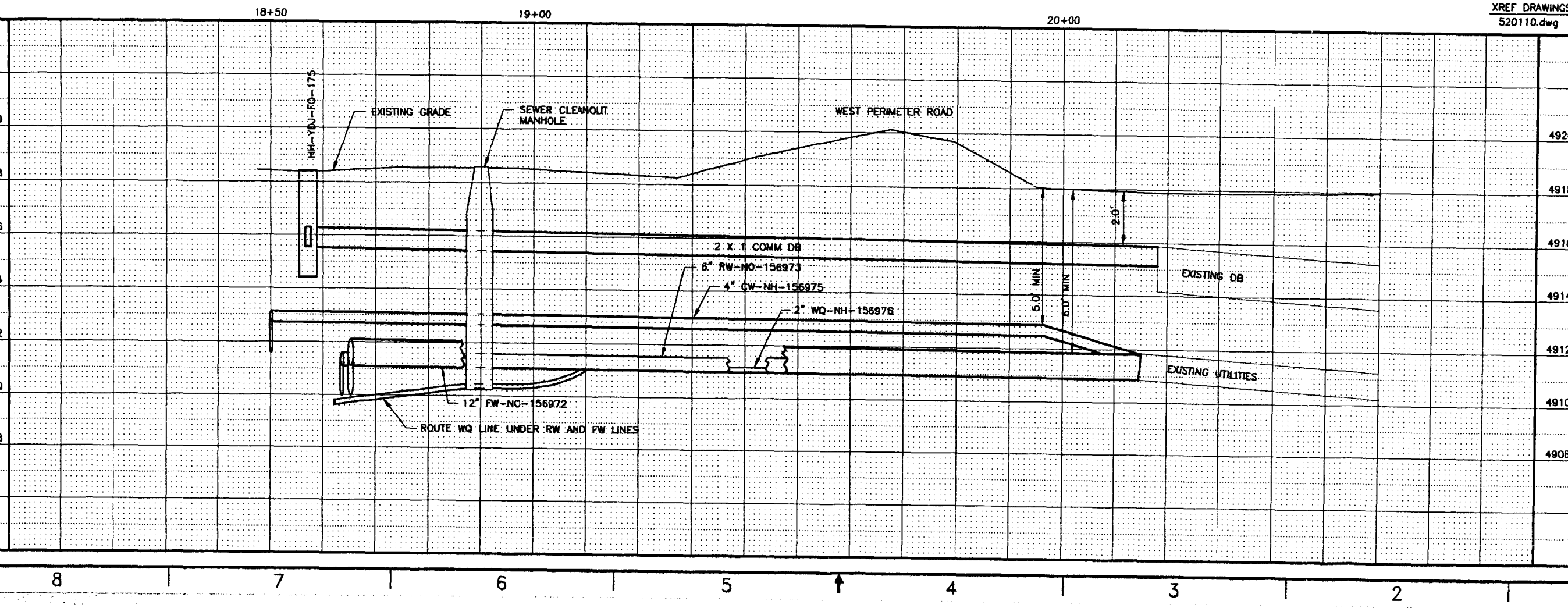

INDEX CODE NUMBER			
AREA	TYPE	CI	DRG
200	0400	10	090

FOR DRAWING INDEX SEE DRAWING NO. 520003

SCALE: 1" = 10.0'

HORIZONTAL SCALE	1"=10.0'
VERTICAL SCALE	1"=2.0'
DESIGN PHASE:	AFC
SAFETY CATEGORY:	LSC

INEEL

INTEC
STAGING, STORAGE, SIZING
AND TREATMENT FACILITY

PLAN AND PROFILE 18+49.98-20+13.03

SIZE	CADD CODE	INDEX CODE NUMBER	DWG-	REV	SHEET
D	01MF3	200 0200 52 090	520013		U-5

SCALE: SEE HORIZONTAL & VERTICAL

SUBCONTRACT NO.
REQUESTOR: S.A. DAVIES
DESIGN: M.S. SNEDDEN
DRAWN: KEITH BRONSON
PROJECT NO. Q20996
SPEC CODE
FOR REVIEW/APPROVAL SIGNATURES
SEE DAR NO. 88704
EFFECTIVE DATE: 9/1/2002

Layout Name: 520013
Date: 09/12/02 - 2:44 P.M.
File: 520013.dwg
Path: C:\dgn\SSSTF

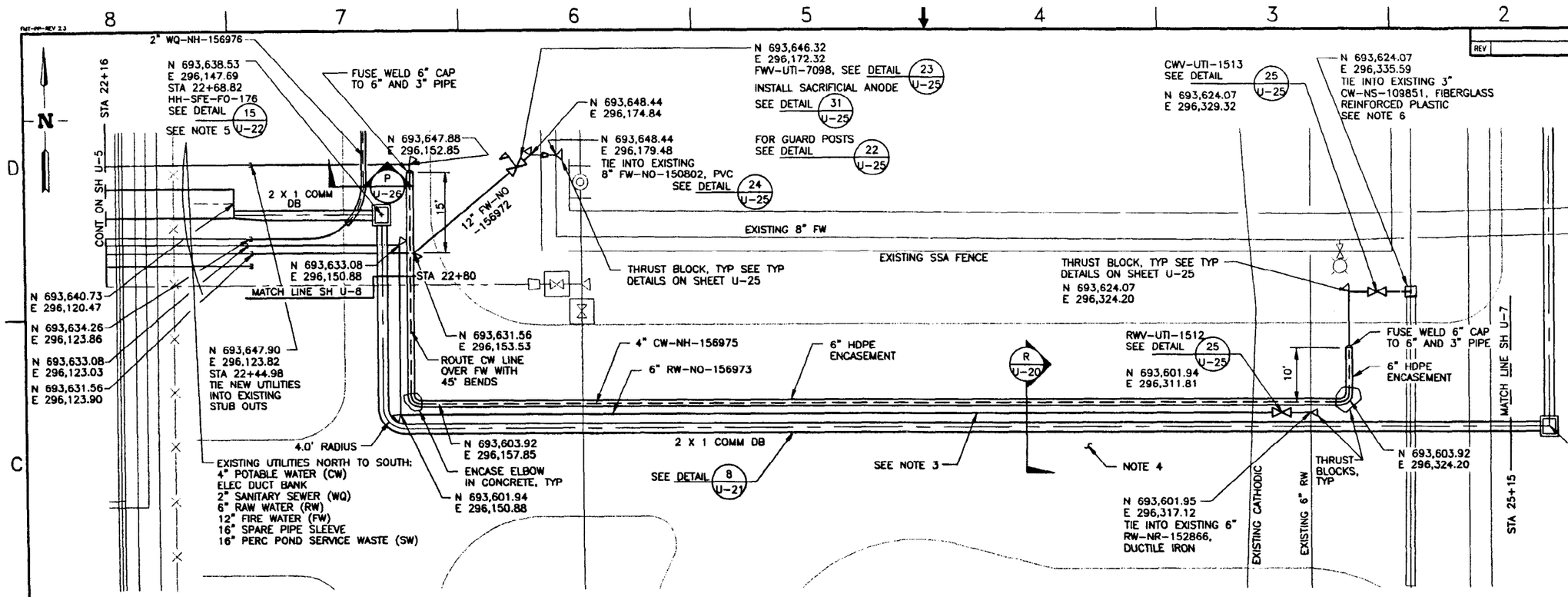

REV	DESCRIPTION	EFFECTIVE DATE:

NOTES

1. PROJECT COORDINATES ARE BASED ON NAD27 IDAHO EAST ZONE STATE PLANE, CORRECTED FOR ELEVATION AND GRID. VERTICAL DATUM IS NGVD29.
2. FOR LEGEND SEE SHEET U-1.
3. PROVIDE 1'-0" CLEARANCE BETWEEN PIPES EXCEPT AS SHOWN.
4. SAW CUT ASPHALT OVER TRENCH. HAUL ASPHALT CONCRETE TO CFA LANDFILL. FOR REPAIR SEE SECTION. A U-20
5. PROVIDE COVER WITH LOCK NUT AND WATER TIGHT SEAL.
6. CUT SECTION OF FRP. INSTALL HDPE WITH MECHANICAL JOINT. SEE DETAIL 32 U-25

XREF DRAWINGS
520110.dwg

INDEX CODE NUMBER: AREA 200 | TYPE 0400 | CL 10 | ORG 090

FOR DRAWING INDEX SEE DRAWING NO. 520003

SCALE: 1" = 10.0'

HORIZONTAL SCALE 1"=10.0'
VERTICAL SCALE 1"=2.0'
DESIGN PHASE: AFC
SAFETY CATEGORY: LSC

INEEL
INTEC
STAGING, SIZING AND TREATMENT FACILITY
PLAN AND PROFILE 22+44.98-25+21.30
SIZE D | CADD CODE 01MF3 | AREA 200 | TYPE 0200 | CL 52 | ORG 090 | DWG- 520014 | REV | SHEET U-6
SCALE: SEE HORIZONTAL & VERTICAL

SUBCONTRACT NO.
REQUESTOR: S.A. DAVIES
DESIGN: M.S. SNEDDEN
DRAWN: KEITH BRONSON
PROJECT NO. 020996
SPEC CODE
FOR REVIEW/APPROVAL SIGNATURES SEE DAR NO. 88704
EFFECTIVE DATE: 4/4/2002

File: 520014.dwg
Path: C:\bch\SSSTF
Layout Name: 520014
Date: 01/23/02 - 2:28 P.M.

REVISIONS		
REV	DESCRIPTION	EFFECTIVE DATE:

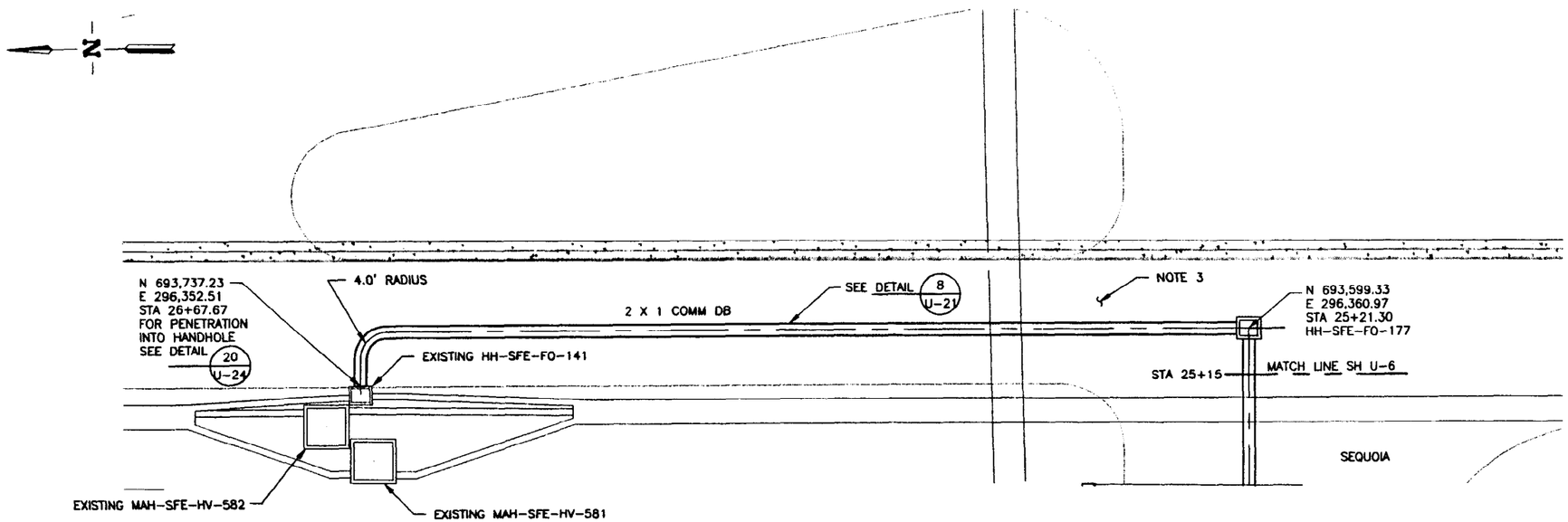

NOTES

1. PROJECT COORDINATES ARE BASED ON NAD27 IDAHO EAST ZONE STATE PLANE, CORRECTED FOR ELEVATION AND GRID. VERTICAL DATUM IS NGVD29.
2. FOR LEGEND SEE SHEET U-1.
3. SAW CUT ASPHALT OVER TRENCH. HAUL ASPHALT CONCRETE TO CFA LANDFILL. FOR REPAIR SEE SECTION. A U-20

XREF DRAWINGS
520110.dwg

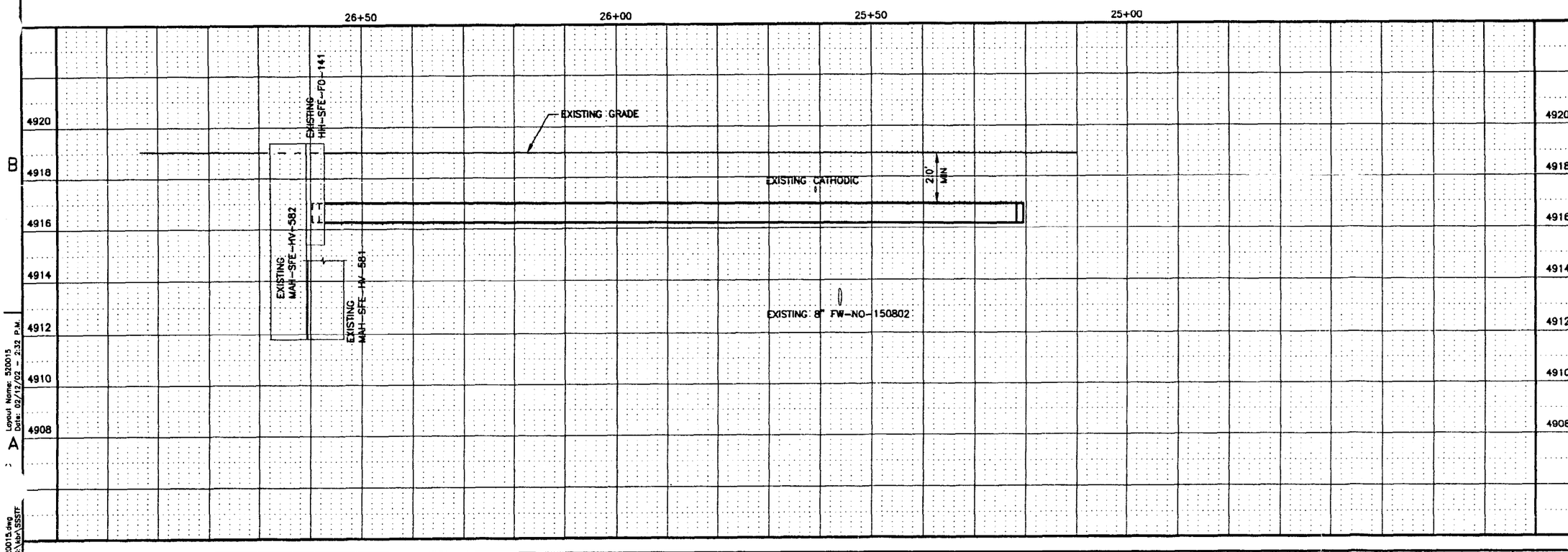

FOR DRAWING INDEX SEE DRAWING NO. 520003

SCALE: 1" = 10.0'

HORIZONTAL SCALE	1"=10.0'
VERTICAL SCALE	1"=2.0'
DESIGN PHASE:	AFC
SAFETY CATEGORY:	LSC

INEEL

INTEC
STAGING, STORAGE, SIZING
AND TREATMENT FACILITY

PLAN AND PROFILE 25+21.30-26+67.67

SIZE D | CADD CODE 01MF3 | BOX CUBE NUMBER 200 04001 0 | DWG 520015 | REV | SHEET U-7

SCALE: SEE HORIZONTAL & VERTICAL

SUBCONTRACT NO.

REQUESTER: S.A. DAVIES
DESIGN: M.S. SNEDDEN
DRAWN: KEITH BRONSON
PROJECT NO. 020996
SPEC CODE
FOR REVIEW/APPROVAL SIGNATURES SEE DAR NO. 88104
EFFECTIVE DATE: 5/1/2002

Layout Name: 520015
Date: 02/12/02 - 2:32 P.M.

File: 520015.dwg
Path: G:\kbr\SSSTF

REVISIONS		
REV	DESCRIPTION	EFFECTIVE DATE:

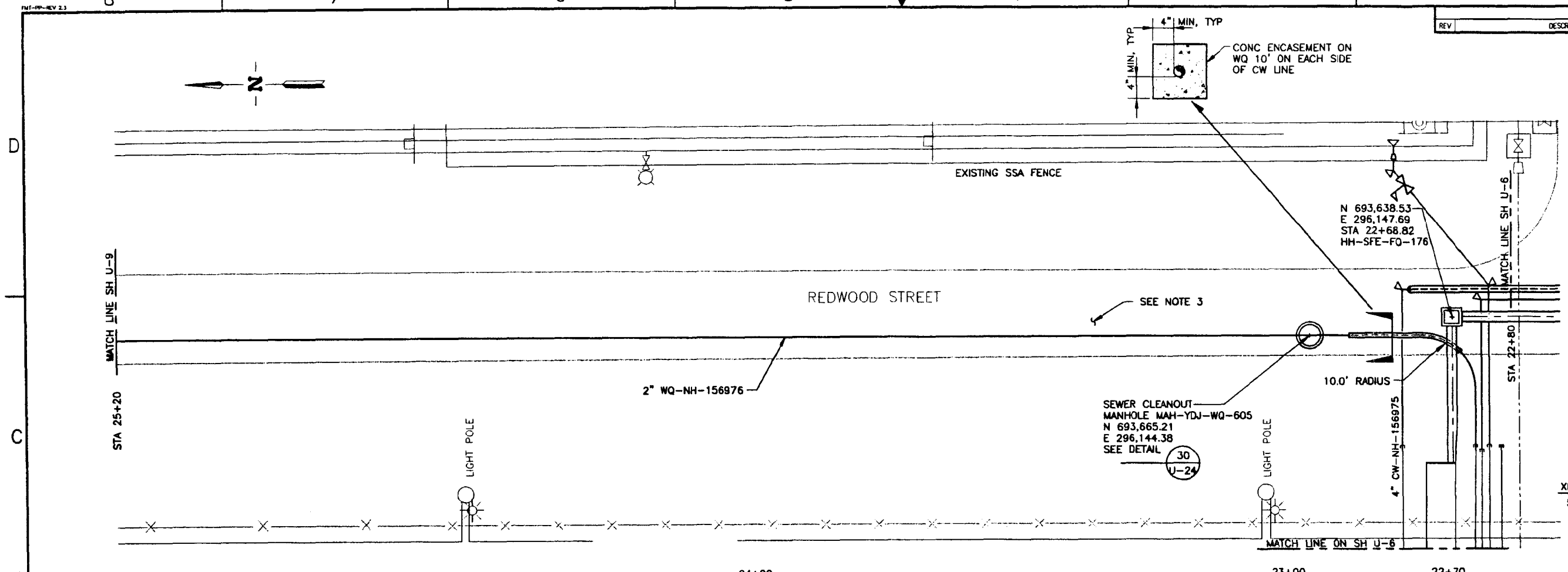

NOTES

1. PROJECT COORDINATES ARE BASED ON NAD27 IDAHO EAST ZONE STATE PLANE, CORRECTED FOR ELEVATION AND GRID. VERTICAL DATUM IS NGVD29.
2. FOR LEGEND SEE SHEET U-1.
3. SAW CUT ASPHALT OVER TRENCH. HAUL ASPHALT CONCRETE TO CFA LANDFILL. FOR REPAIR SEE SECTION. A U-20

XREF DRAWINGS
520110.dwg

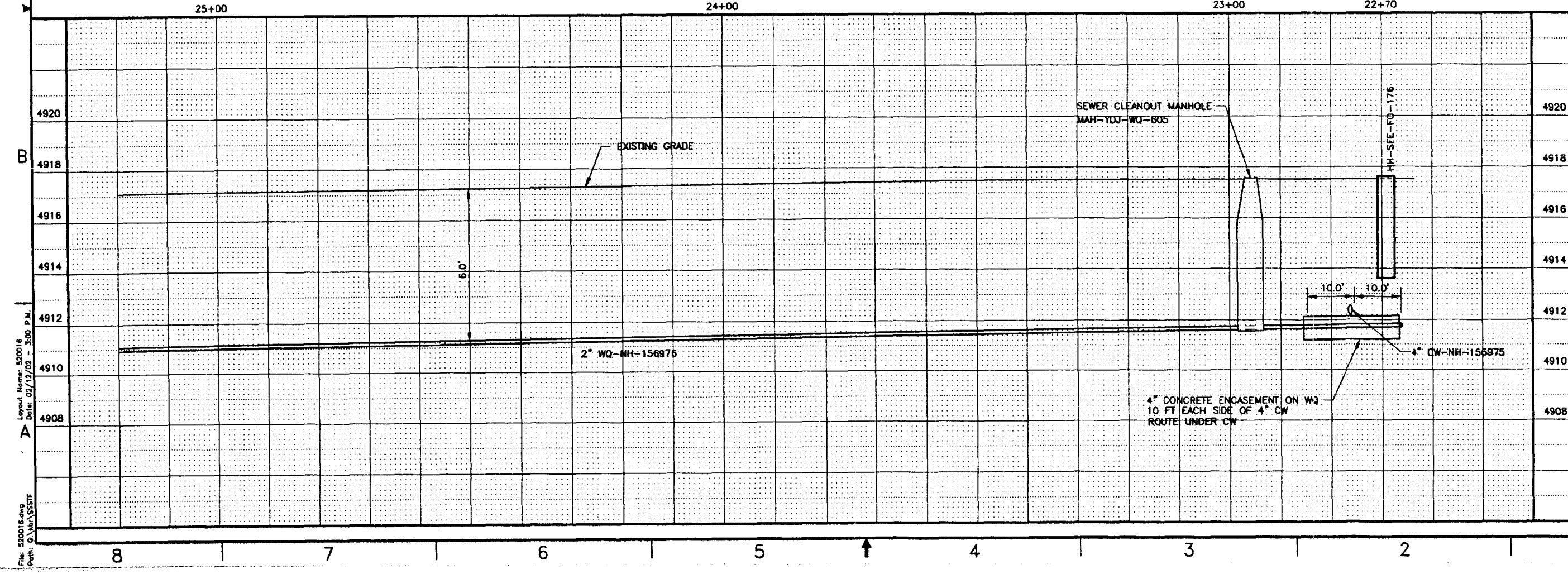

INDEX CODE NUMBER			
AREA	TYPE	GL	ORIG
200	0400	10	090

FOR DRAWING INDEX SEE DRAWING NO. 520003

SCALE: 1" = 10.0'

HORIZONTAL SCALE	1"=10.0'
VERTICAL SCALE	1"=2.0'
DESIGN PHASE:	AFC
SAFETY CATEGORY:	LSC

INEEL

INTEC
STAGING, STORAGE, SIZING AND TREATMENT FACILITY

PLAN AND PROFILE 22+68.82-25+20

SIZE	CADD CODE	AREA	TYPE	GL	ORIG	DWG-	REV	SHEET
D	01MF3	200	0200	52	090	520016		U-8

SCALE: SEE HORIZONTAL & VERTICAL

SUBCONTRACT NO.
REQUESTER: S.A. DAVIES
DESIGN: M.S. SNEDDEN
DRAWN: KEITH BRONSON
PROJECT NO. 020996
SPEC CODE
FOR REVIEW/APPROVAL SIGNATURES
SEE DAR NO. 88704
EFFECTIVE DATE: 3/4/2002

Layout Name: 520016
Date: 02/12/02 - 3:00 P.M.

File: 520016.dwg
Path: Q:\Xbr\SSTF

REVISIONS		
REV	DESCRIPTION	EFFECTIVE DATE:

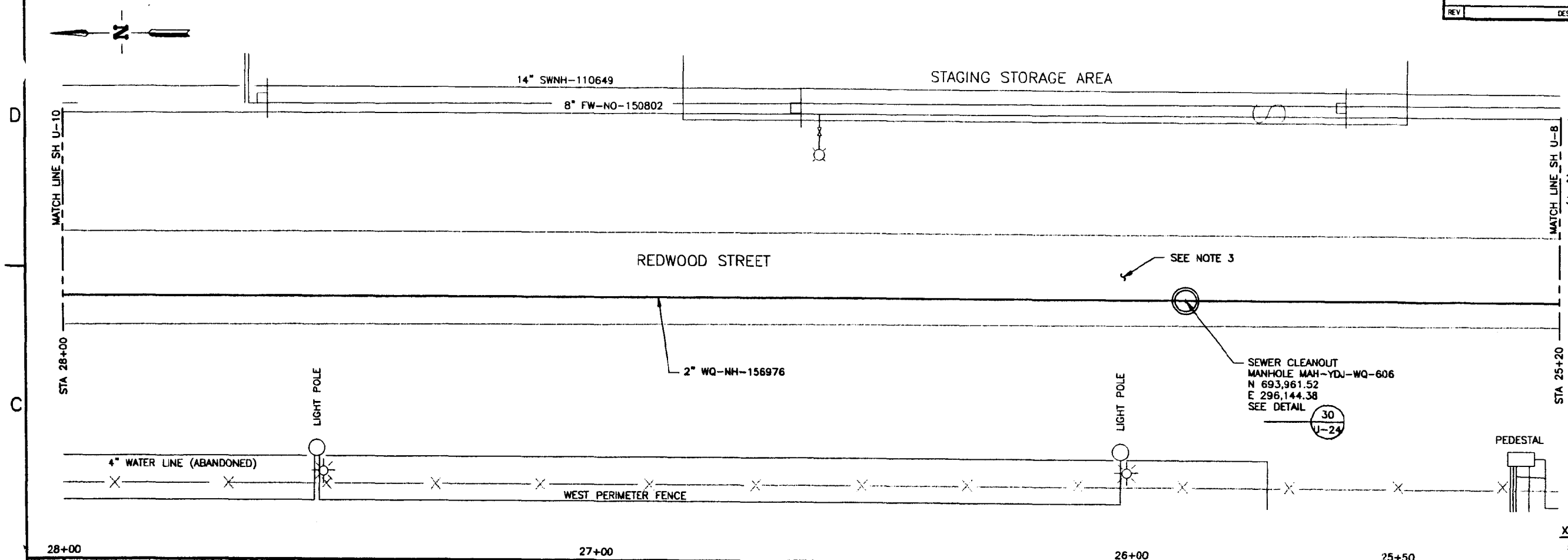

NOTES

1. PROJECT COORDINATES ARE BASED ON NAD27 IDAHO EAST ZONE STATE PLANE, CORRECTED FOR ELEVATION AND GRID. VERTICAL DATUM IS NGVD29.
2. FOR LEGEND SEE SHEET U-1.
3. SAW CUT ASPHALT OVER TRENCH. HAUL ASPHALT CONCRETE TO CFA LANDFILL. FOR REPAIR SEE SECTION. A U-20

XREF DRAWINGS
520110.dwg

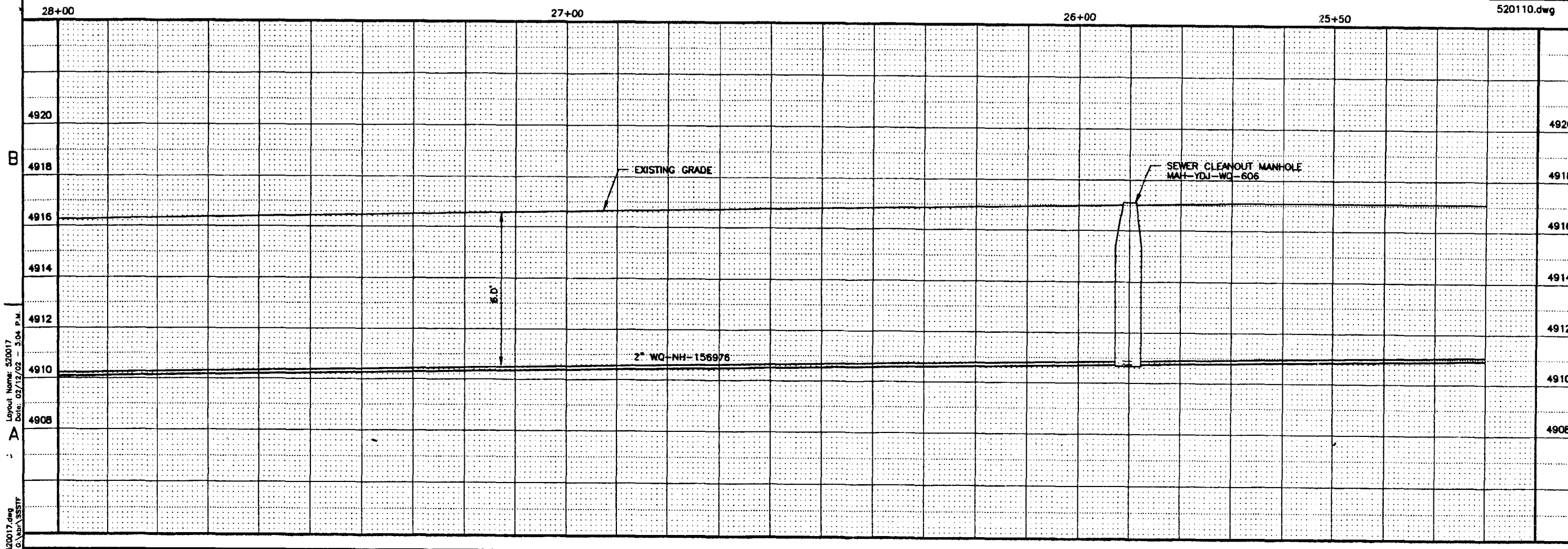

FOR DRAWING INDEX SEE DRAWING NO. 520003

SCALE: 1" = 10.0'

HORIZONTAL SCALE	1"=10.0'
VERTICAL SCALE	1"=2.0'
DESIGN PHASE:	AFC
SAFETY CATEGORY:	LSC

INEEL

INTEC
STAGING, STORAGE, SIZING AND TREATMENT FACILITY

PLAN AND PROFILE 25+20-28+00

SIZE D | DWG CODE 01MF3 | BLOCK CODE 2200 | PROJECT CODE 02200 | SEQ NUMBER 1090 | DWG- 520017 | REV | SHEET U-9

SCALE: SEE HORIZONTAL & VERTICAL

SUBCONTRACT NO.

REQUESTER: S.A. DAVIES
DESIGN: M.S. SWEIDEN
DRAWN: KEITH BRONSON
PROJECT NO. 020996
SPEC CODE
ITP/ REVIEW/APPROVAL SIGNATURES
SEE DWR NO. 88704
EFFECTIVE DATE: 3/4/2002

REGISTERED PROFESSIONAL ENGINEER CLINTON O. KINGSFORD 2104 3-01-02

Layout Name: 520017
Date: 02/12/02 - 3:04 P.M.
File: 520017.dwg
Path: G:\bin\SSSTF

REVISIONS		
REV	DESCRIPTION	EFFECTIVE DATE:

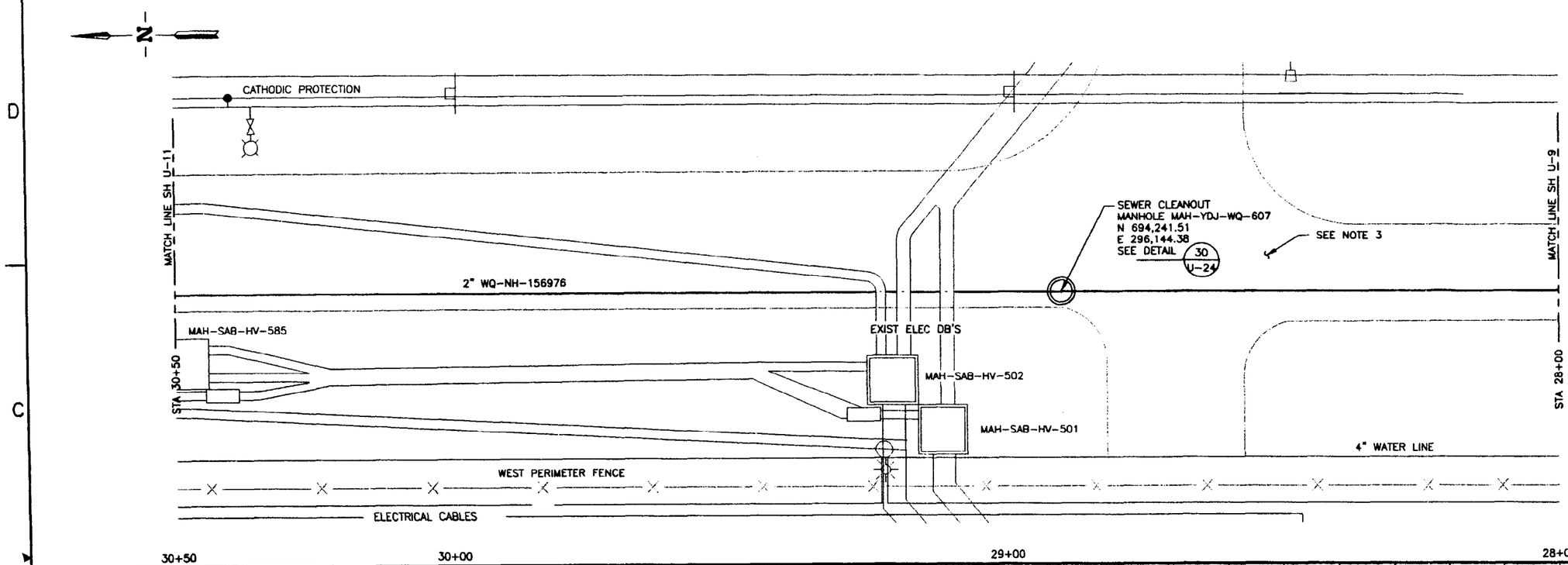

NOTES

1. PROJECT COORDINATES ARE BASED ON NAD27 IDAHO EAST ZONE STATE PLANE, CORRECTED FOR ELEVATION AND GRID. VERTICAL DATUM IS NGVD29.
2. FOR LEGEND SEE SHEET U-1.
3. SAW CUT ASPHALT OVER TRENCH. HAUL ASPHALT CONCRETE TO CFA LANDFILL. FOR REPAIR SEE SECTION. A U-20

XREF DRAWINGS
520110.dwg

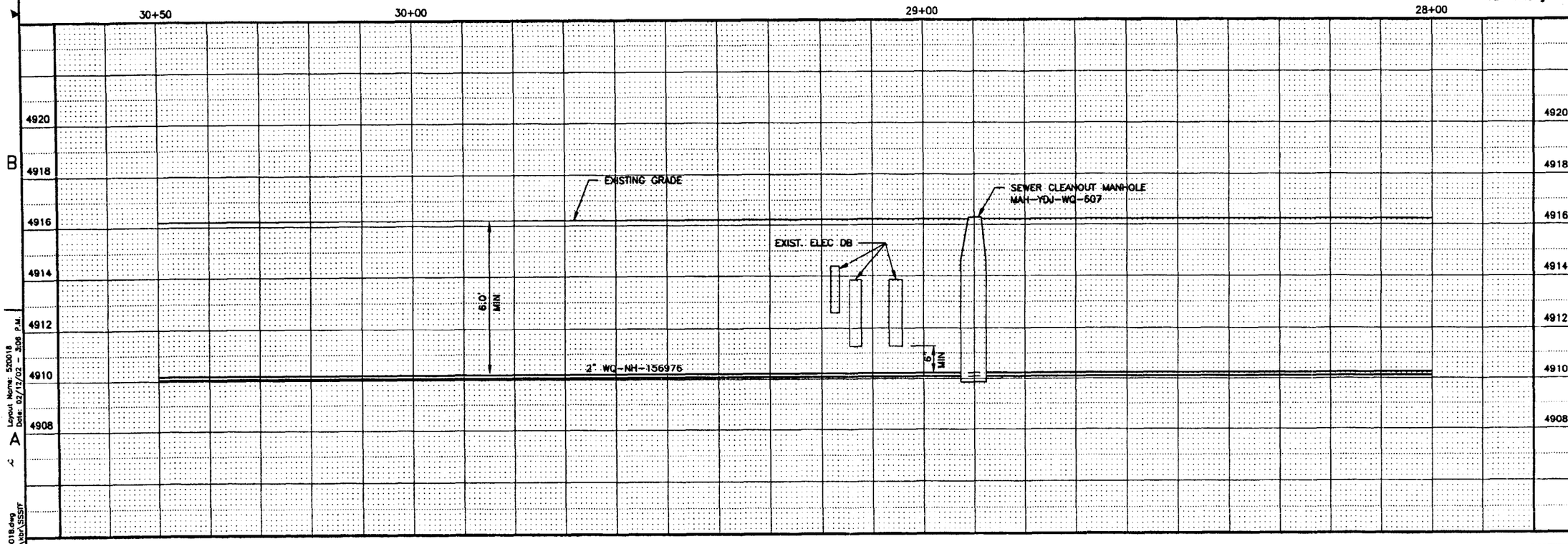

FOR DRAWING INDEX SEE DRAWING NO. 520003

SCALE: 1" = 10.0'

HORIZONTAL SCALE 1"=10.0'

VERTICAL SCALE 1"=2.0'

DESIGN PHASE: AFC

SAFETY CATEGORY: LSC

INEEL

INTEC STAGING, STORAGE, SIZING AND TREATMENT FACILITY

PLAN AND PROFILE 28+00-30+50

DWG- 520018 REV

SHEET U-10

SIZE D CADE CODE 01MF3 AREA 200 TYPE 0200 SYS 521 NUMBER 090

SCALE: SEE HORIZONTAL & VERTICAL

SUBCONTRACT NO.

REDRAFTER: S.A. DAVIES

DESIGN: M.S. SNEDDEN

DRAWN: KEITH BRONSON

PROJECT NO. 020996

SPEC CODE

FOR REVIEW/APPROVAL SIGNATURES SEE DAR NO. 88704

EFFECTIVE DATE: 9/12/2002

Layout Name: 520018
Date: 02/12/02 - 3:06 P.M.

File: 520018.dwg
Path: G:\ktb\SSSIF

REVISIONS		
REV	DESCRIPTION	EFFECTIVE DATE:

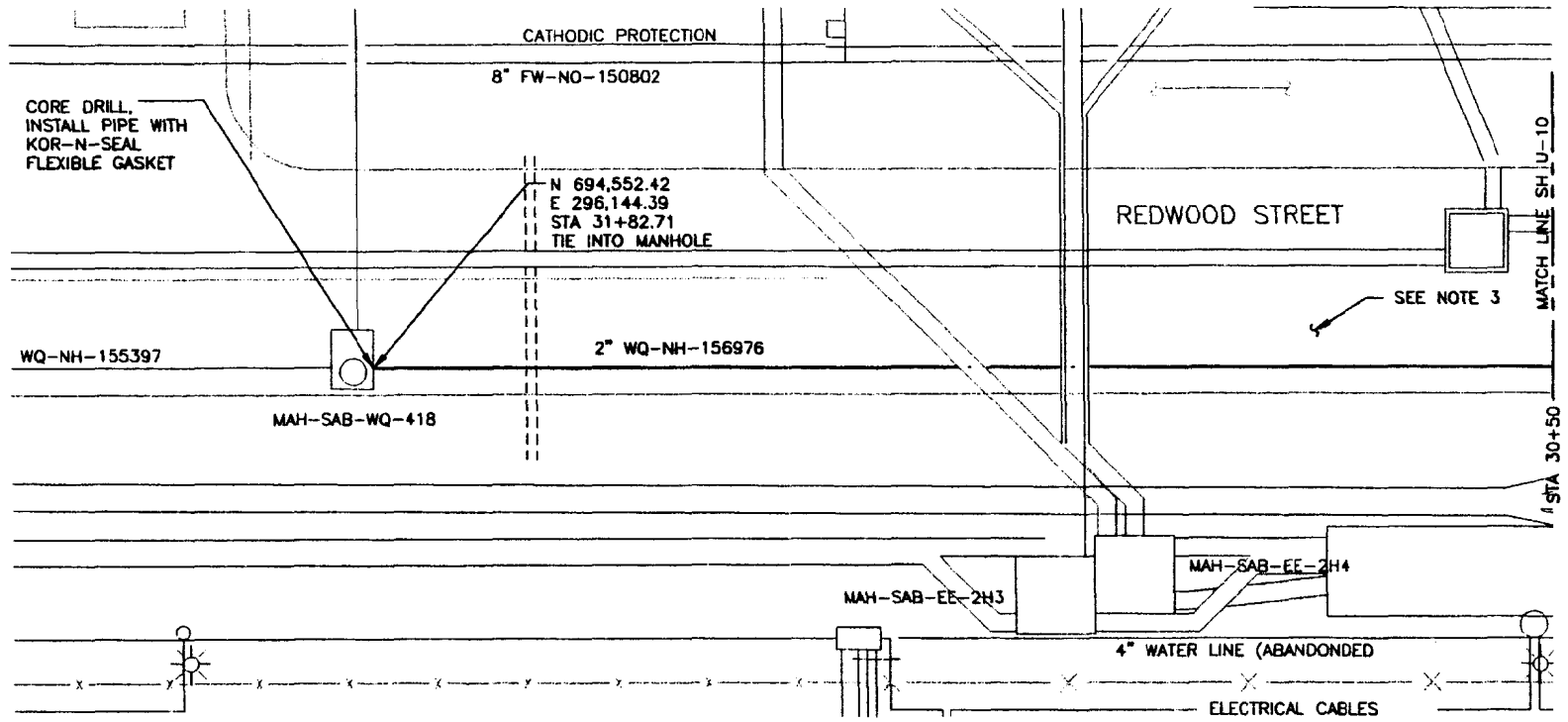

NOTES

1. PROJECT COORDINATES ARE BASED ON NAD27 IDAHO EAST ZONE STATE PLANE, CORRECTED FOR ELEVATION AND GRID. VERTICAL DATUM IS NGVD29.
2. FOR LEGEND SEE SHEET U-1.
3. SAW CUT ASPHALT OVER TRENCH. HAUL ASPHALT CONCRETE TO CFA LANDFILL. FOR REPAIR SEE SECTION. A U-20

XREF DRAWINGS
520110.dwg

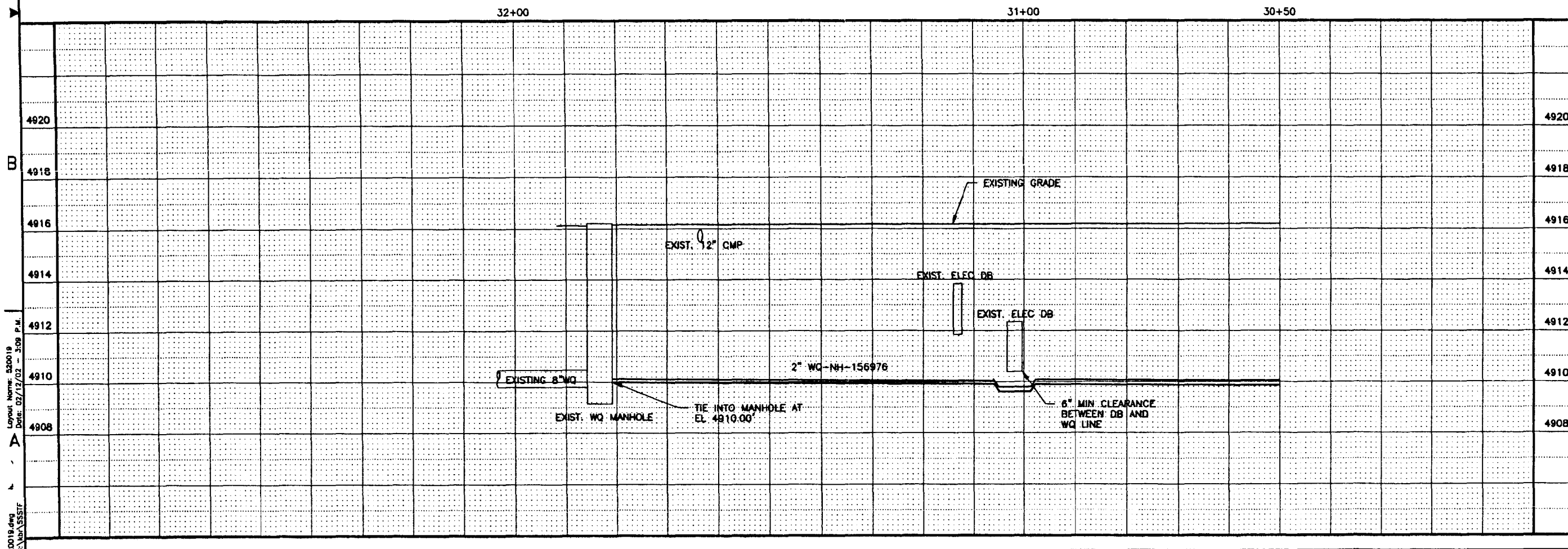

FOR DRAWING INDEX SEE DRAWING NO. 520003

SCALE: 1" = 10.0'

HORIZONTAL SCALE 1"=10.0'
VERTICAL SCALE 1"=2.0'
DESIGN PHASE: AFC
SAFETY CATEGORY: LSC

INEEL
INTEC
STAGING, STORAGE, SIZING AND TREATMENT FACILITY
PLAN AND PROFILE 30+50-31+82.71
SIZE D | CADD CODE 01MF3 | PROJECT NO. 200 | DISC. 02001 | SEQ. 52 | DWG. 090 | DWG- 520019 | REV | SHEET U-11
SCALE SEE HORIZONTAL & VERTICAL

SUBCONTRACT NO.
REGISTER: S.A. DAVIES
DESIGN: M.S. SNEDDEN
DRAWN: KOTH BRONSON
PROJECT NO. 020996
SPEC CODE
FOR REVIEW/APPROVAL SIGNATURES SEE DAR NO. 88704
EFFECTIVE DATE: 3/6/2003

Layout Name: 520019
Date: 02/12/02 - 3:09 P.M.
File: 520019.dwg
Path: G:\kbr\SSSTF

REVISIONS		
REV	DESCRIPTION	EFFECTIVE DATE:

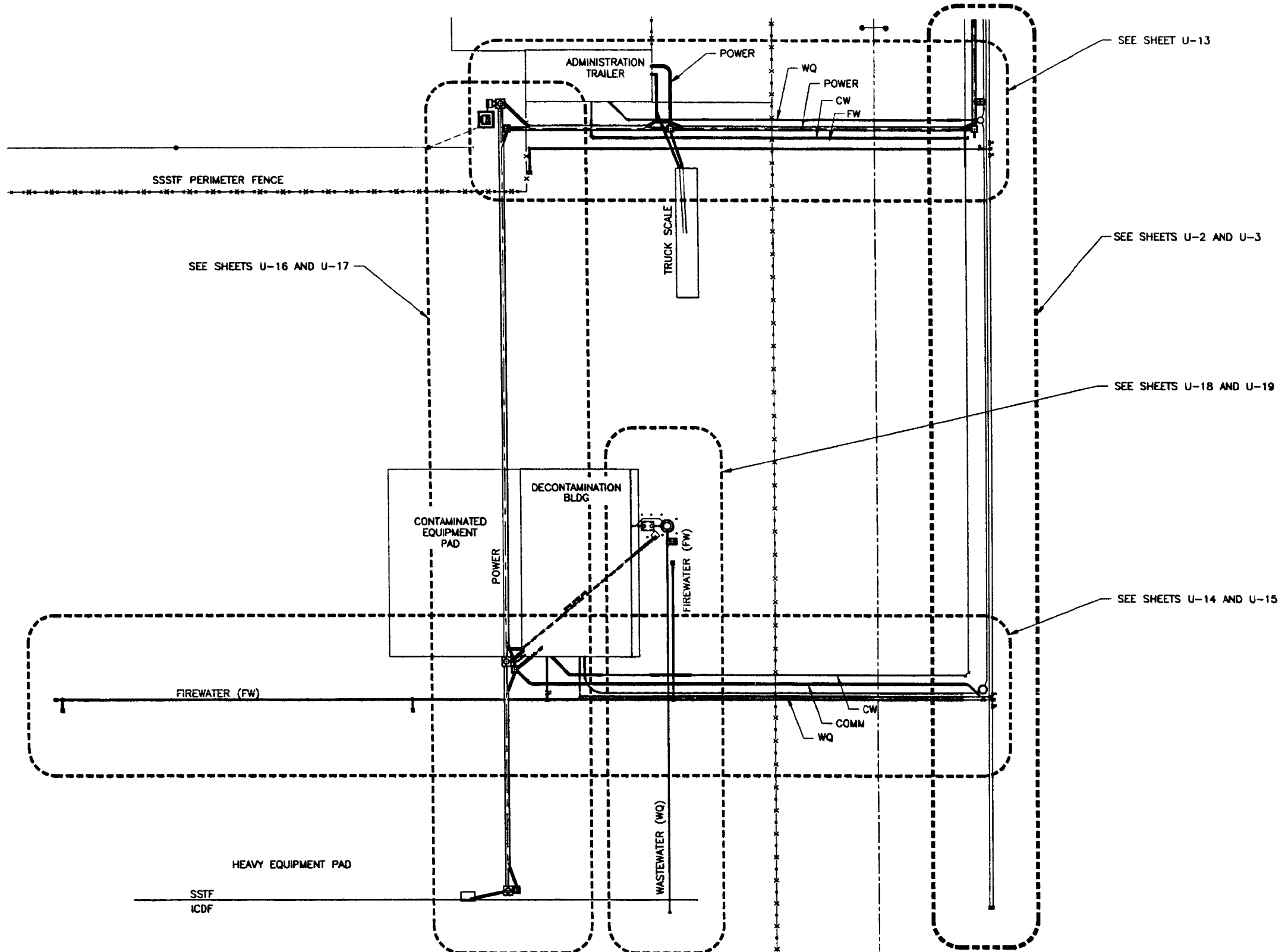

NOTES

1. PROJECT COORDINATES ARE BASED ON NAD27 IDAHO EAST ZONE STATE PLANE, CORRECTED FOR ELEVATION AND GRID. VERTICAL DATUM IS NGVD29.
2. FOR LEGEND SEE SHEET U-1.

XREF DRAWINGS
520110.dwg

OVERALL UTILITIES PLAN

INDEX CODE NUMBER			
AREA	TYPE	QL	ORIG
200	0400	10	090

FOR DRAWING INDEX SEE DRAWING NO. 520003

SCALE: 1" = 30.0'

DESIGN PHASE: AFC
SAFETY CATEGORY: LSC

SUBCONTRACT NO.
REQUESTER: S.A. DAVIES
DESIGN: MELANIE SNEDDEN
DRAWN: KEITH BRONSON
PROJECT NO. 020996
SPEC CODE
FOR REVIEW/APPROVAL SIGNATURES SEE DAR NO. 88704
EFFECTIVE DATE: 2/6/2002

INEEL BECHTEL BWXT IDAHO, LLC

INTEC
STAGING, STORAGE, SIZING AND TREATMENT FACILITY

OVERALL UTILITIES PLAN AT SSSTF AREA

SIZE	CAGE CODE	INDEX CODE NUMBER				DWG-	REV
		AREA	TYPE	QL	ORIG		
D	01MF3	200	0200	52	090	520020	

SCALE: 1"=30.0' SHEET U-12

Layout Name: 520020
Date: 03/05/02 - 08:13 AM
File: 520020.dwg
Path: G:\Var\SSSTF

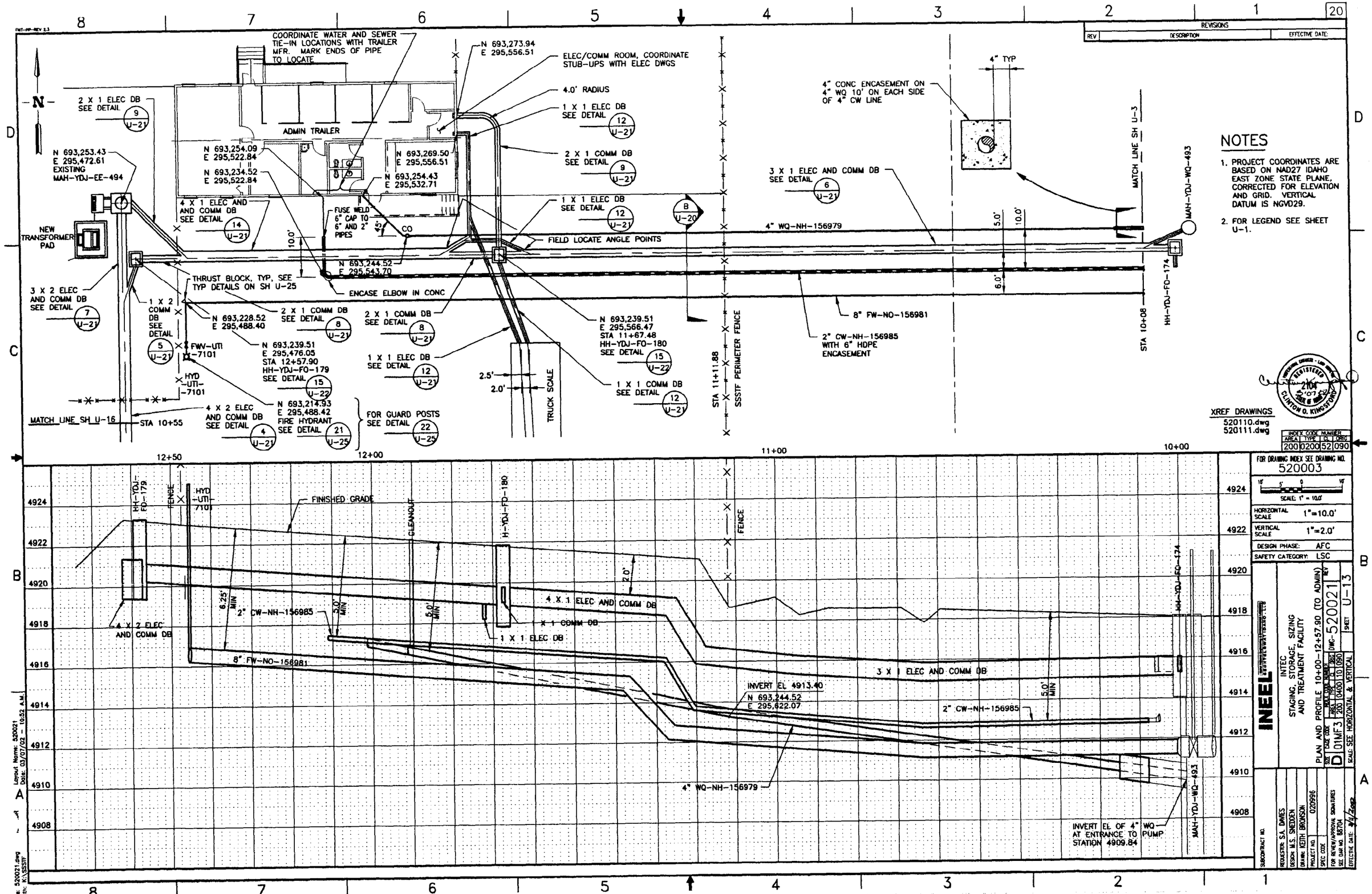
COORDINATE WATER AND SEWER TIE-IN LOCATIONS WITH TRAILER MFR. MARK ENDS OF PIPE TO LOCATE
N 693,273.94
E 295,556.51
ELEC/COMM ROOM, COORDINATE STUB-UPS WITH ELEC DWGS
4.0' RADIUS
1 X 1 ELEC DB SEE DETAIL 12 U-21
2 X 1 COMM DB SEE DETAIL 9 U-21
2 X 1 ELEC DB SEE DETAIL 9 U-21
ADMIN TRAILER
N 693,254.09
E 295,522.84
N 693,234.52
E 295,522.84
N 693,269.50
E 295,556.51
N 693,254.43
E 295,532.71
N 693,253.43
E 295,472.61
EXISTING MAH-YDJ-EE-494
NEW TRANSFORMER PAD
4 X 1 ELEC AND COMM DB SEE DETAIL 14 U-21
FUSE WELD 6" CAP TO 6" AND 2" PIPES
CO
1 X 1 ELEC DB SEE DETAIL 12 U-21
B U-20
FIELD LOCATE ANGLE POINTS
4" WQ-NH-156979
3 X 1 ELEC AND COMM DB SEE DETAIL 6 U-21
4" CONC ENCASEMENT ON 4" WQ 10' ON EACH SIDE OF 4" CW LINE
4" TYP
MATCH LINE SH U-3
MAH-YDJ-WQ-493
HH-YDJ-FO-174
STA 10+08
NOTES
1. PROJECT COORDINATES ARE BASED ON NAD27 IDAHO EAST ZONE STATE PLANE, CORRECTED FOR ELEVATION AND GRID. VERTICAL DATUM IS NGVD29.
2. FOR LEGEND SEE SHEET U-1.
2 X 1 ELEC DB SEE DETAIL 9 U-21
3 X 2 ELEC AND COMM DB SEE DETAIL 7 U-21
THRUST BLOCK, TYP, SEE TYP DETAILS ON SH U-25
ENCASE ELBOW IN CONC
1 X 2 COMM DB SEE DETAIL 5 U-21
N 693,228.52
E 295,488.40
2 X 1 COMM DB SEE DETAIL 8 U-21
2 X 1 COMM DB SEE DETAIL 8 U-21
FWV-UTI-7101
N 693,239.51
E 295,476.05
STA 12+57.90
HH-YDJ-FO-179
SEE DETAIL 15 U-22
1 X 1 ELEC DB SEE DETAIL 12 U-21
HYD-UTI-7101
N 693,239.51
E 295,566.47
STA 11+67.48
HH-YDJ-FO-180
SEE DETAIL 15 U-22
1 X 1 COMM DB SEE DETAIL 12 U-21
2.5'
2.0'
TRUCK SCALE
STA 11+11.88
SSSTF PERIMETER FENCE
8" FW-NO-156981
2" CW-NH-156985 WITH 6" HDPE ENCASEMENT
MATCH LINE SH U-16
STA 10+55
4 X 2 ELEC AND COMM DB SEE DETAIL 4 U-21
N 693,214.93
E 295,488.42
FIRE HYDRANT SEE DETAIL 21 U-25
FOR GUARD POSTS SEE DETAIL 22 U-25
12+50
12+00
11+00
10+00
XREF DRAWINGS
520110.dwg
520111.dwg
INDEX CODE NUMBER
AREA TYPE G ORIG
200 0200 52 090
FOR DRAWING INDEX SEE DRAWING NO. 520003
SCALE: 1" = 10.0'
HORIZONTAL SCALE 1"=10.0'
VERTICAL SCALE 1"=2.0'
DESIGN PHASE: AFC
SAFETY CATEGORY: LSC
FINISHED GRADE
HH-YDJ-FO-179
FENCE
HYD-UTI-7101
CLEANOUT
HH-YDJ-FO-180
FENCE
HH-YDJ-FO-174
4924
4922
4920
4918
4916
4914
4912
4910
4908
6.25' MIN
5.0' MIN
5.0' MIN
2.0'
4 X 2 ELEC AND COMM DB
2" CW-NH-156985
4 X 1 ELEC AND COMM DB
X 1 COMM DB
1 X 1 ELEC DB
8" FW-NO-156981
3 X 1 ELEC AND COMM DB
INVERT EL 4913.40
N 693,244.52
E 295,622.07
2" CW-NH-156985
5.0' MIN
4" WQ-NH-156979
MAH-YDJ-WQ-493
INVERT EL OF 4" WQ AT ENTRANCE TO PUMP STATION 4909.84
INEEL
INTEC
STAGING, STORAGE, SIZING AND TREATMENT FACILITY
PLAN AND PROFILE 10+00-12+57.90 (TO ADMIN)
DWG-520021
U-13
SIZE D
AREA TYPE G ORIG
200 0400 10 090
SCALE: SEE HORIZONTAL & VERTICAL
REQUESTER: S.A. DAVIES
DESIGN: M.S. SNEDDEN
DRAWN: KEITH BRONSON
PROJECT NO. 020996
SPEC CODE
FOR REVIEW/APPROVAL SIGNATURES
SEE DWG NO. 80704
EFFECTIVE DATE: 4/4/2002
SUBCONTRACT NO.
REVISIONS
REV DESCRIPTION EFFECTIVE DATE
Layout Name: 520021
Date: 03/07/02 - 10:52 A.M.
File: 520021.dwg
Path: K:\SSSTF

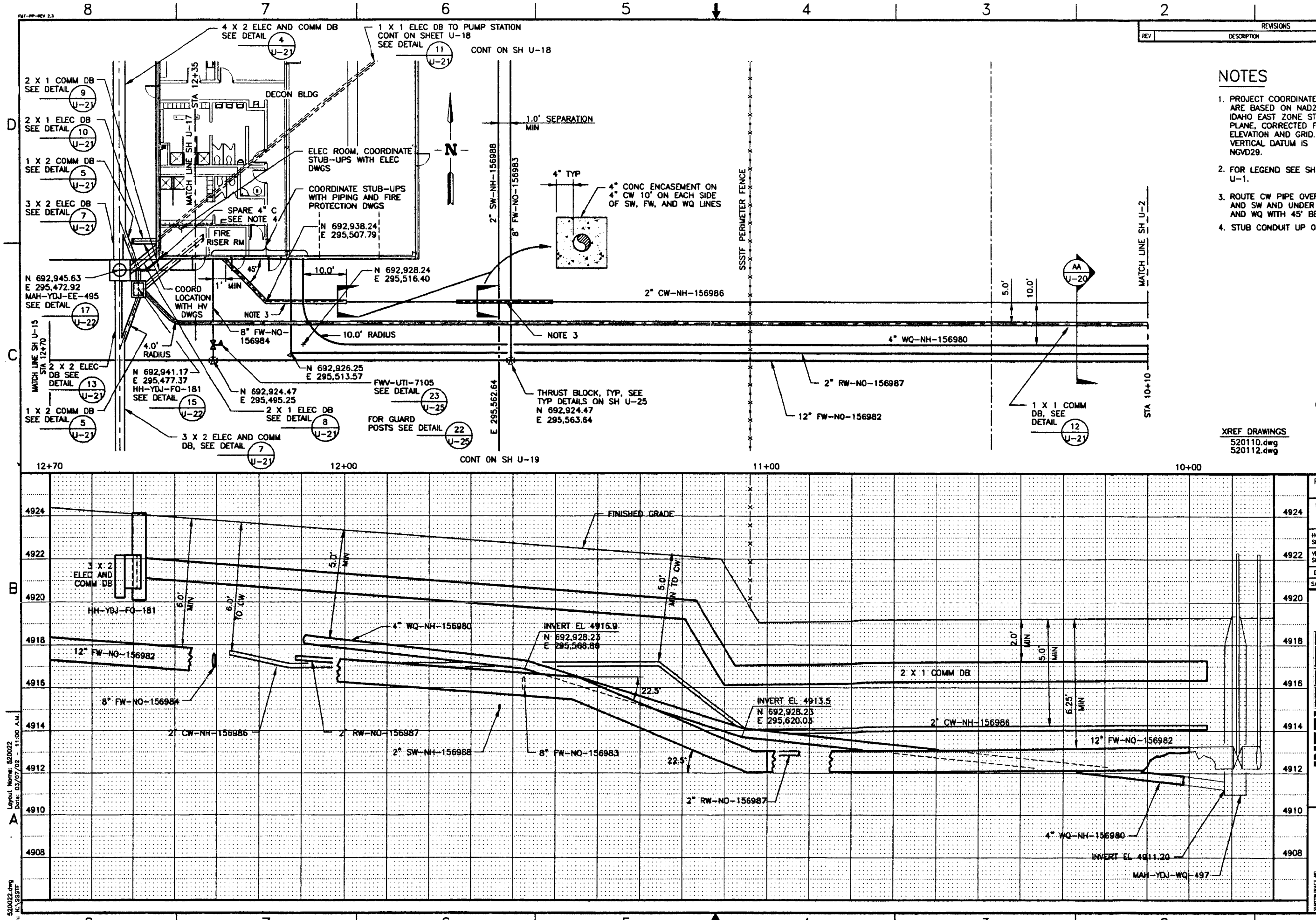

NOTES

1. PROJECT COORDINATES ARE BASED ON NAD27 IDAHO EAST ZONE STATE PLANE, CORRECTED FOR ELEVATION AND GRID. VERTICAL DATUM IS NGVD29.
2. FOR LEGEND SEE SHEET U-1.
3. ROUTE CW PIPE OVER FW AND SW AND UNDER RW AND WQ WITH 45' BENDS.
4. STUB CONDUIT UP ON INTERIOR WALL.

XREF DRAWINGS
520110.dwg
520112.dwg

REVISIONS		
REV	DESCRIPTION	EFFECTIVE DATE:

INDEX CODE NUMBER			
AREA	TYPE	CL	ORIG
200	0400	10	090

FOR DRAWING INDEX SEE DRAWING NO. 520003

SCALE: 1" = 10.0'

HORIZONTAL SCALE 1"=10.0'

VERTICAL SCALE 1"=2.0'

DESIGN PHASE: AFC

SAFETY CATEGORY: LSC

INEEL

INTEC STAGING, STORAGE, SIZING AND TREATMENT FACILITY

PLAN AND PROFILE 10+00-12+70 (TO DECON)

SIZE D | CADD CODE 01MF3 | INDEX CODE NUMBER AREA 200 TYPE 0200 CL 52 ORIG 090 | DWG- 520022 | REV | SHEET U-14

SCALE: SEE HORIZONTAL & VERTICAL

SUBCONTRACT NO.

REQUESTER: S.A. DAVIES
DESIGN: M.S. SNEDDON
DRAWN: KEITH BRANSON
PROJECT NO. 020996
SPEC CODE
FOR REVIEW/APPROVAL SIGNATURES SEE DAR NO. 88704
EFFECTIVE DATE: 9/11/2002

Layout Name: 520022
Date: 03/07/02 - 11:00 A.M.

File: 520022.dwg
Path: K:\SSSTF

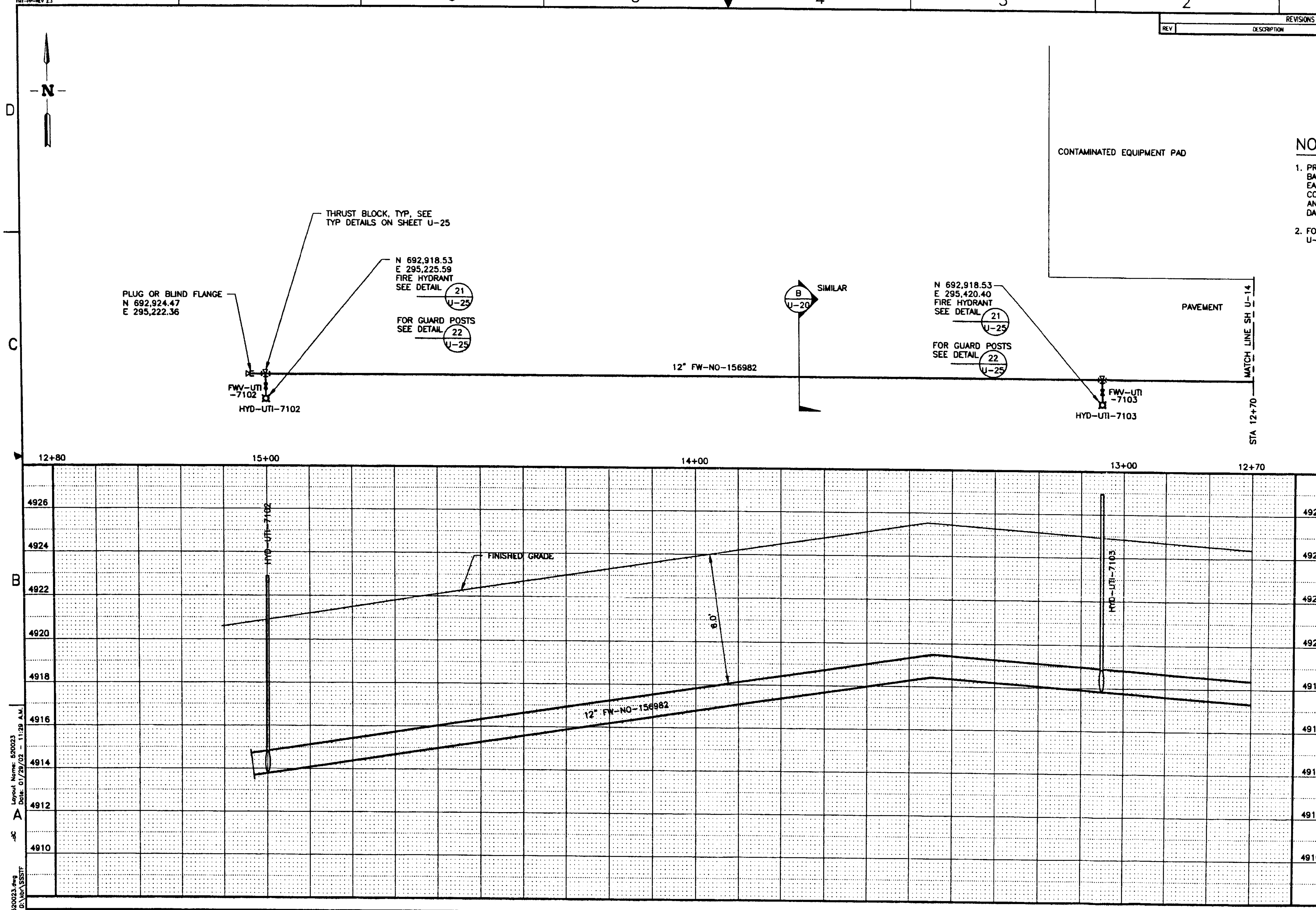

NOTES

1. PROJECT COORDINATES ARE BASED ON NAD27 IDAHO EAST ZONE STATE PLANE, CORRECTED FOR ELEVATION AND GRID. VERTICAL DATUM IS NGVD29.
2. FOR LEGEND SEE SHEET U-1.

REVISIONS		
REV	DESCRIPTION	EFFECTIVE DATE:

XREF DRAWINGS
520110.dwg

FOR DRAWING INDEX SEE DRAWING NO. 520003

SCALE: 1" = 10.0'

HORIZONTAL SCALE 1"=10.0'
VERTICAL SCALE 1"=2.0'
DESIGN PHASE: AFC
SAFETY CATEGORY: LSC

INEEL
INTEC
STAGING, STORAGE, SIZING AND TREATMENT FACILITY
PLAN AND PROFILE 12+70–15+00 (FIRE MAIN)

SIZE D | CAGE CODE 01MF3 | AREA 200 | TYPE 0200 | C.I. 52 | DISC. 090 | DWG- 520023 | SHEET U-15
SCALE: SEE HORIZONTAL & VERTICAL

SUBCONTRACT NO.
REQUESTER: S.A. DAVIES
DESIGN: M.S. SNEDDEN
DRAWN: KEITH BRONSON
PROJECT NO. 020996
SPEC CODE
FOR REVIEW/APPROVAL SIGNATURES SEE DAR NO. 8704
EFFECTIVE DATE: 3/4/2002

REGISTERED PROFESSIONAL ENGINEER – CLINTON O. KINGSFORD – 3-01-02

File: 520023.dwg
Path: Q:\kbr\SSSTF
Layout Name: 520023
Date: 01/29/02 – 11:29 A.M.

22

REVISIONS		
REV	DESCRIPTION	EFFECTIVE DATE:

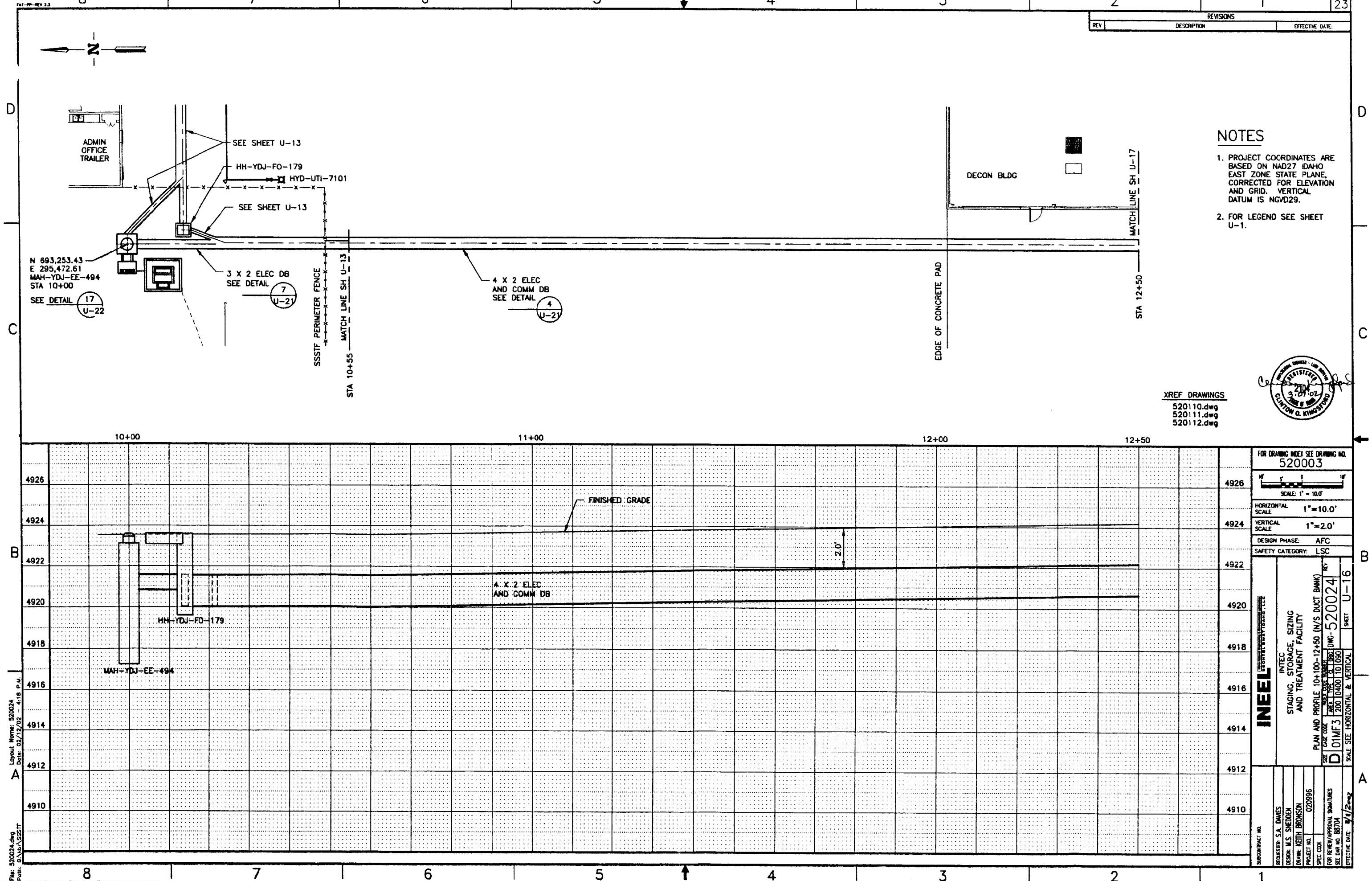

NOTES

1. PROJECT COORDINATES ARE BASED ON NAD27 IDAHO EAST ZONE STATE PLANE, CORRECTED FOR ELEVATION AND GRID. VERTICAL DATUM IS NGVD29.
2. FOR LEGEND SEE SHEET U-1.

XREF DRAWINGS
520110.dwg
520111.dwg
520112.dwg

REGISTERED PROFESSIONAL ENGINEER - LAND SURVEYOR
STATE OF IDAHO
CLINTON Q. KINGSFORD
3-7-02

FOR DRAWING INDEX SEE DRAWING NO. 520003

SCALE: 1" = 10.0'

HORIZONTAL SCALE	1"=10.0'
VERTICAL SCALE	1"=2.0'
DESIGN PHASE:	AFC
SAFETY CATEGORY:	LSC

INEEL
Lockheed Martin Idaho Technologies Company

INTEC
STAGING, STORAGE, SIZING AND TREATMENT FACILITY

PLAN AND PROFILE 10+100-12+50 (N/S DUCT BANK)

SIZE D | CAGE CODE 01MF3 | PACK CODE: AREA 200 | TYPE 0400 | CL 1864 | SUB 110 | 090 | DWG- 520024 | REV | SHEET U-16

SCALE: SEE HORIZONTAL & VERTICAL

SUBCONTRACT NO.
REQUESTER: S.A. DAMES
DESIGN: M.S. SNEDDEN
DRAWN: KEITH BRONSON
PROJECT NO. 020996
SPEC CODE
FOR REVIEW/APPROVAL SIGNATURES
SET DWR NO. 88704
EFFECTIVE DATE: 3/6/2002

Layout Name: 520024
Date: 03/12/02 - 4:18 P.M.
File: 520024.dwg
Path: G:\sbr\SSSTF

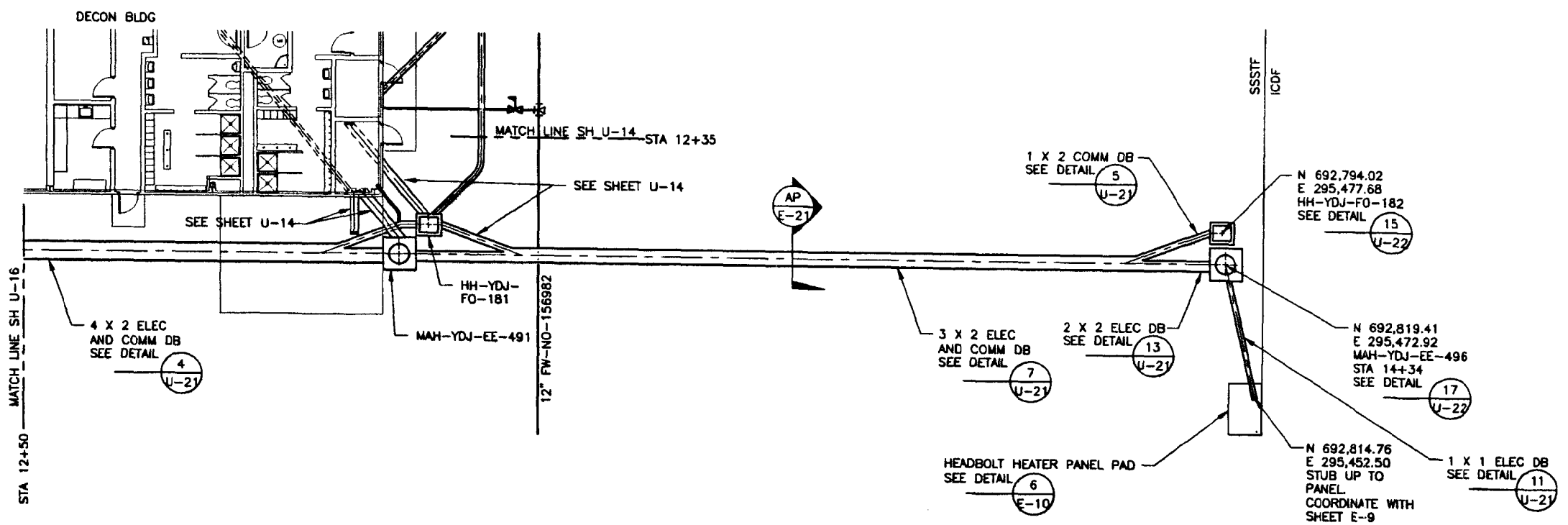

NOTES

1. PROJECT COORDINATES ARE BASED ON NAD27 IDAHO EAST ZONE STATE PLANE, CORRECTED FOR ELEVATION AND GRID. VERTICAL DATUM IS NGVD29.
2. FOR LEGEND SEE SHEET U-1.

XREF DRAWINGS
520110.dwg
520112.dwg

REV	DESCRIPTION	EFFECTIVE DATE:

REVISIONS

INDEX CODE NUMBER			
AREA	TYPE	CL	ORIG
200	0400	10	090

FOR DRAWING INDEX SEE DRAWING NO. 520003

SCALE: 1" = 10.0'

HORIZONTAL SCALE 1"=10.0'

VERTICAL SCALE 1"=2.0'

DESIGN PHASE: AFC

SAFETY CATEGORY: LSC

INEEL

INTEC
STAGING, SIZING
AND TREATMENT FACILITY

PLAN AND PROFILE 12+50-14+34 (N/S DUCTBANK)

SET	CADE CODE	AREA	TYPE	CL	DISC	DWG- 520025	REV
D	01MF3	200	0200	52	090		

SHEET U-17

SCALE SEE HORIZONTAL & VERTICAL

SUBCONTRACT NO.

REQUESTER: S.A. DAVIES
DESIGN: M.S. SNEDDEN
DRAWN: KEITH BRONSON
PROJECT NO. 020996
SPEC CODE
FOR REVIEW/APPROVAL SIGNATURES
SEL DWR NO. 88704
EFFECTIVE DATE: 3/6/2002

Layout Name: 520025
Date: 02/05/02 - 08:56 A.M.
File: 520025.dwg
Path: G:\ear\SSSTF

REVISIONS		
REV	DESCRIPTION	EFFECTIVE DATE

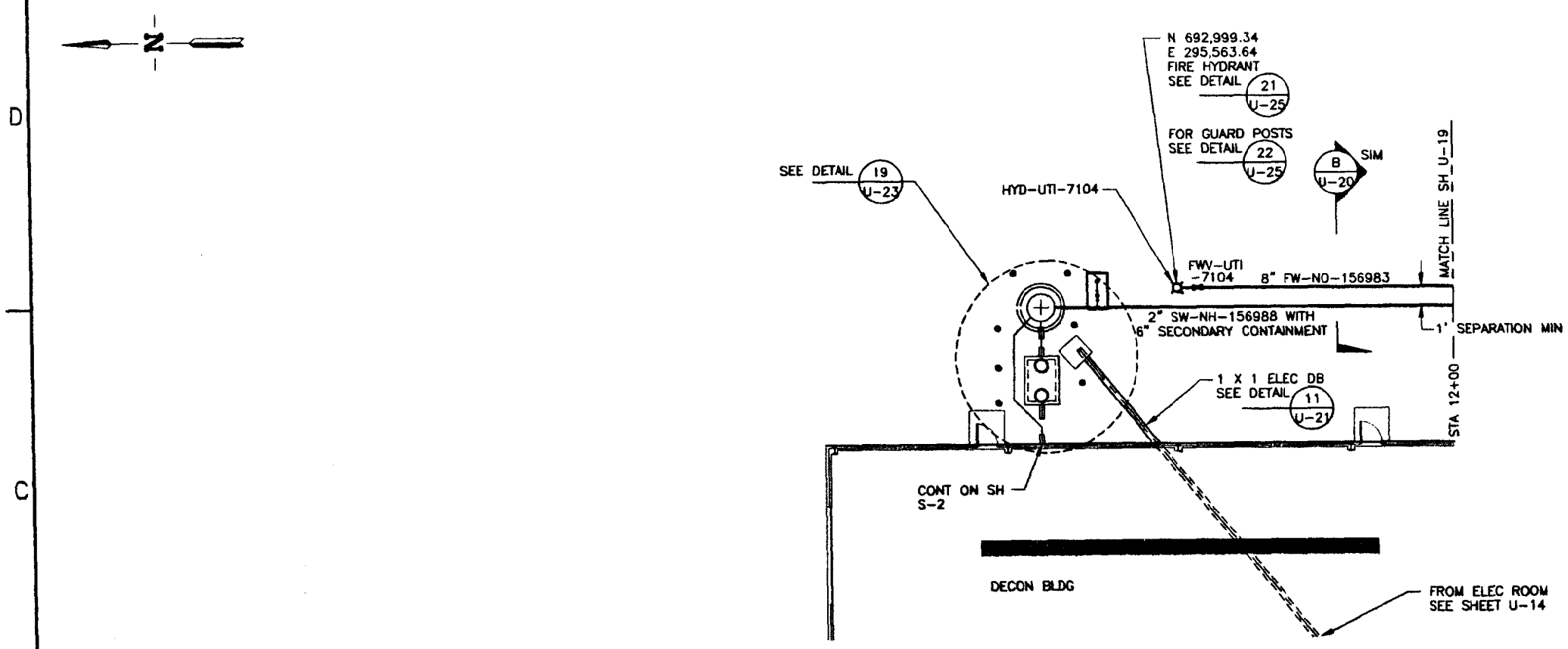

NOTES

1. PROJECT COORDINATES ARE BASED ON NAD27 IDAHO EAST ZONE STATE PLANE, CORRECTED FOR ELEVATION AND GRID. VERTICAL DATUM IS NGVD29.
2. FOR LEGEND SEE SHEET U-1.

XREF DRAWINGS
520110.dwg
520112.dwg

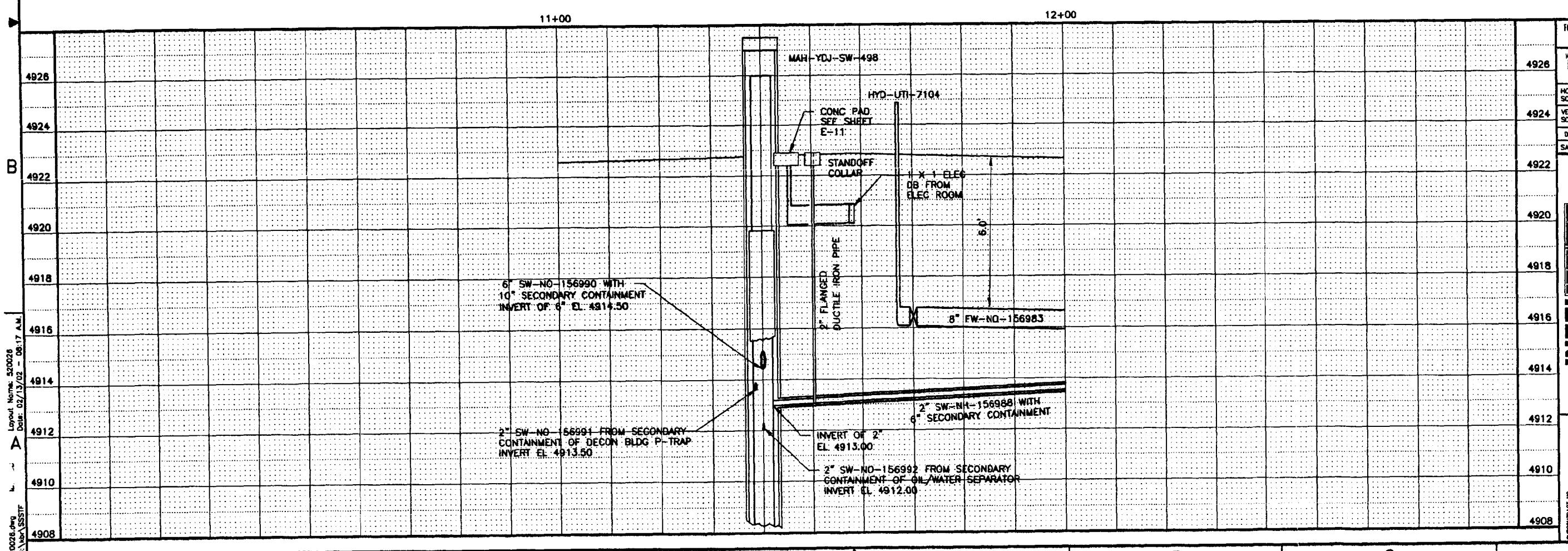

FOR DRAWING INDEX SEE DRAWING NO. 520003

SCALE: 1" = 10.0'

HORIZONTAL SCALE	1"=10.0'
VERTICAL SCALE	1"=2.0'
DESIGN PHASE:	AFC
SAFETY CATEGORY:	LSC

INEEL

INTEC
STAGING, STORAGE, SIZING AND TREATMENT FACILITY

PLAN AND PROFILE 11+00-12+00 (WASTE WATER)

SIZE D | CODE IDENT NO. 01WF3 | PROJECT CODE 200 | DISC 02 | ORIG 00 | DWG-520026 | REV 0 | SHEET U-18

SCALE: SEE HORIZONTAL & VERTICAL

SUBCONTRACT NO.

REGISTER: S.A. DAMES
DESIGN: M.S. SNEDDEN
DRAWN: KEITH BRONSON
PROJECT NO. 020996
SPEC CODE
TOR REVIEW/APPROVAL SIGNATURES
SEE DAR NO. 88704
EFFECTIVE DATE: 3/1/2002

File: 520026.dwg
Path: G:\xbr\SSSTF
Layout Name: 520026
Date: 02/13/02 - 08:17 A.M.

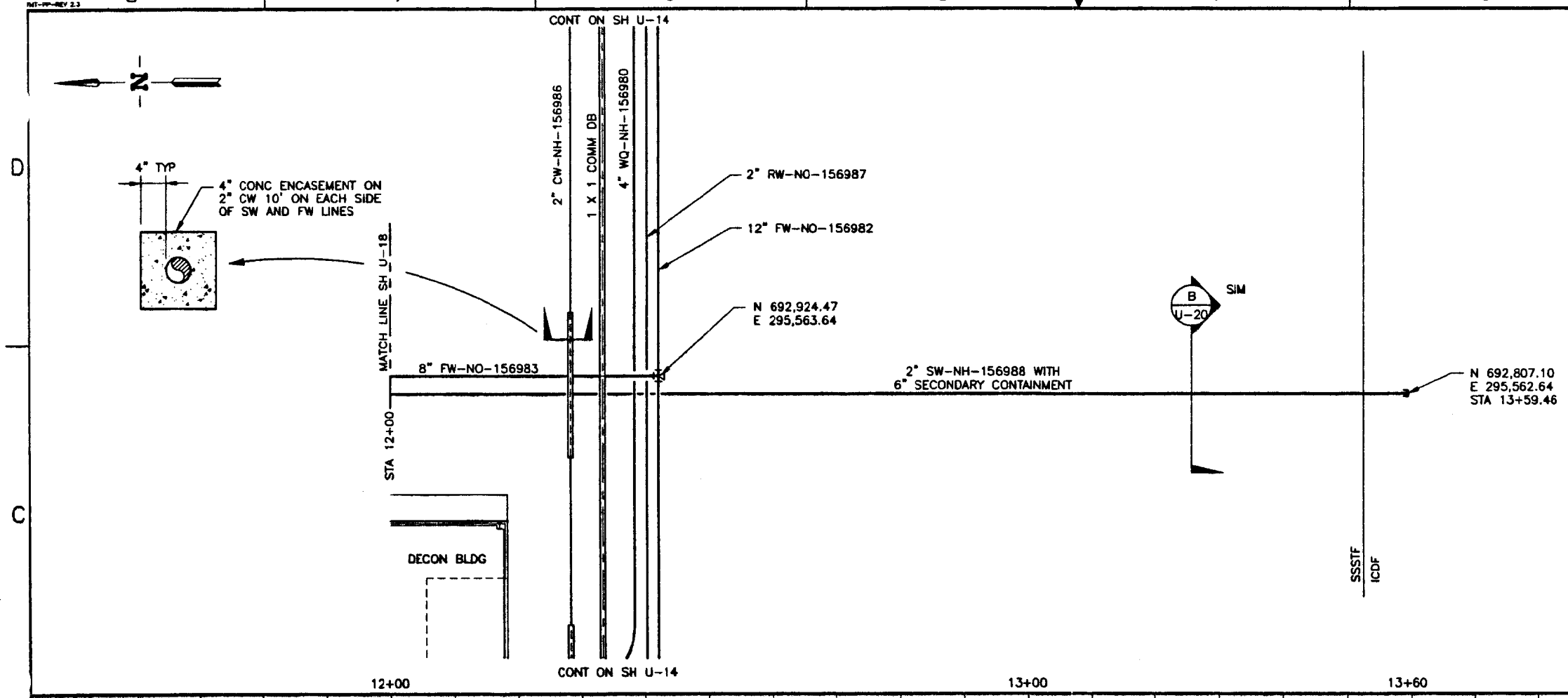

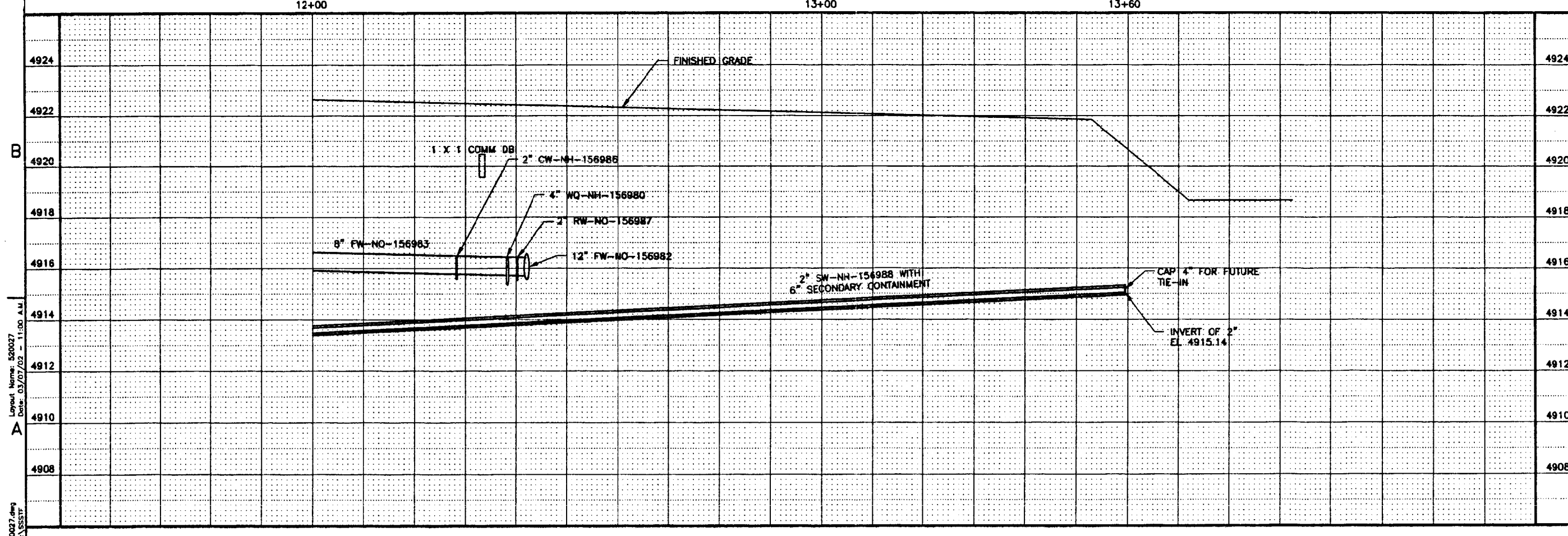

NOTES

1. PROJECT COORDINATES ARE BASED ON NAD27 IDAHO EAST ZONE STATE PLANE, CORRECTED FOR ELEVATION AND GRID. VERTICAL DATUM IS NGVD29.
2. FOR LEGEND SEE SHEET U-1.

XREF DRAWINGS
520110.dwg
520112.dwg

REGISTERED 2104 03-07-02 CLINTON O. KINGSFORD

REVISIONS

REV	DESCRIPTION	EFFECTIVE DATE:

FOR DRAWING INDEX SEE DRAWING NO. 520003

SCALE: 1" = 10.0'

HORIZONTAL SCALE 1"=10.0'
VERTICAL SCALE 1"=2.0'
DESIGN PHASE: AFC
SAFETY CATEGORY: LSC

INEEL
INTEC
STAGING, STORAGE, SIZING AND TREATMENT FACILITY
PLAN AND PROFILE 12+00-13+59.46 (WASTE WATER)
SIZE D | CADD CODE 01MF3 | AREA 200 | TYPE 0200 | CL 52 | DISC 090 | DWG- 520027 | REV | SHEET U-19
SCALE: SEE HORIZONTAL & VERTICAL

SUBCONTRACT NO.
REGISTER: S.A. DAVIES
DESIGN: M.S. SNEDDEN
DRAWN: KEITH BRONSON
PROJECT NO. 020996
SPEC CODE
FOR REVIEW/APPROVAL SIGNATURES
SEE DAR NO. 88704
EFFECTIVE DATE: 3/6/2003

Layout Name: 520027
Date: 03/07/02 - 11:00 AM
File: 520027.dwg
Path: K:\SSSTF

REVISIONS		
REV	DESCRIPTION	EFFECTIVE DATE:

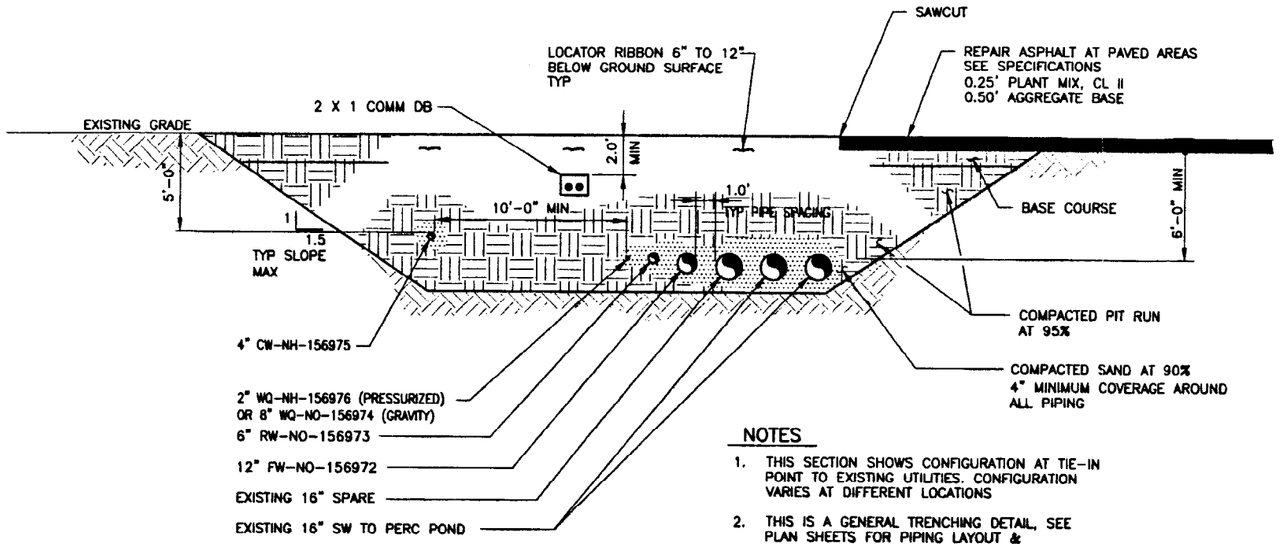

NOTES

1. THIS SECTION SHOWS CONFIGURATION AT TIE-IN POINT TO EXISTING UTILITIES. CONFIGURATION VARIES AT DIFFERENT LOCATIONS
2. THIS IS A GENERAL TRENCHING DETAIL, SEE PLAN SHEETS FOR PIPING LAYOUT & SEPARATION

SECTION A TYP
NTS

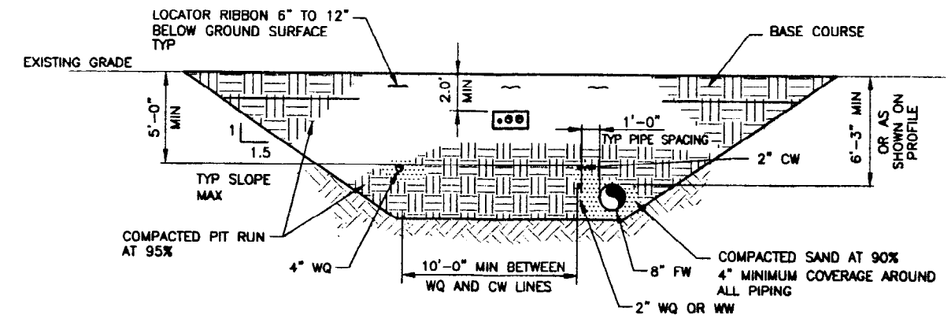

NOTE: THIS IS A GENERAL TRENCHING DETAIL. SEE PLAN SHEETS FOR PIPING LAYOUT & SEPARATION

SECTION B TYP
SCALE: 1/4"=1'-0"

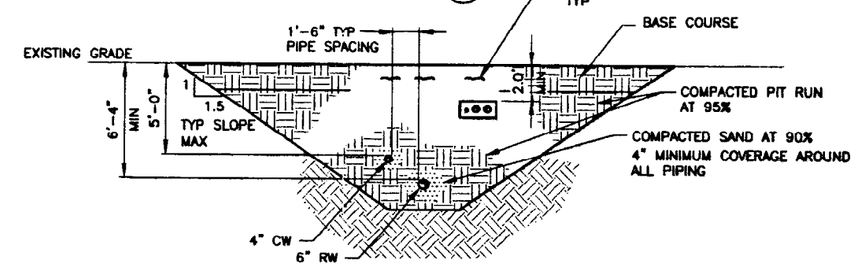

SECTION R U-6
SCALE: 1/4"=1'-0"

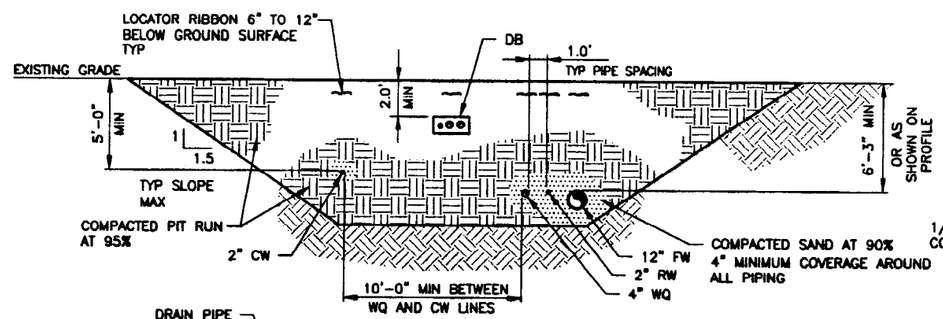

SECTION AA U-14
SCALE: 1/4"=1'-0"

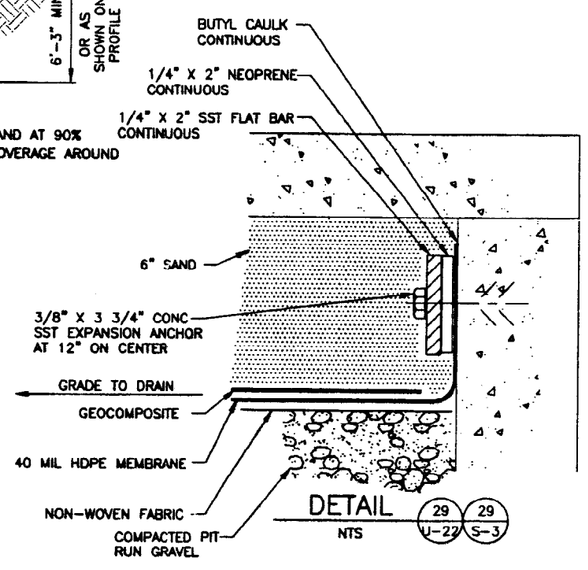

DETAIL 29 U-22 / 29 S-3
NTS

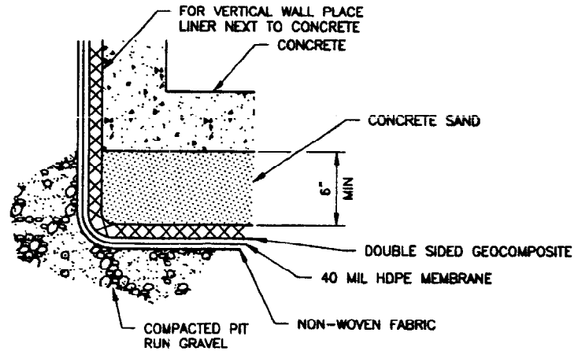

LINER DETAIL 3 S-3 / 3 U-22
NTS

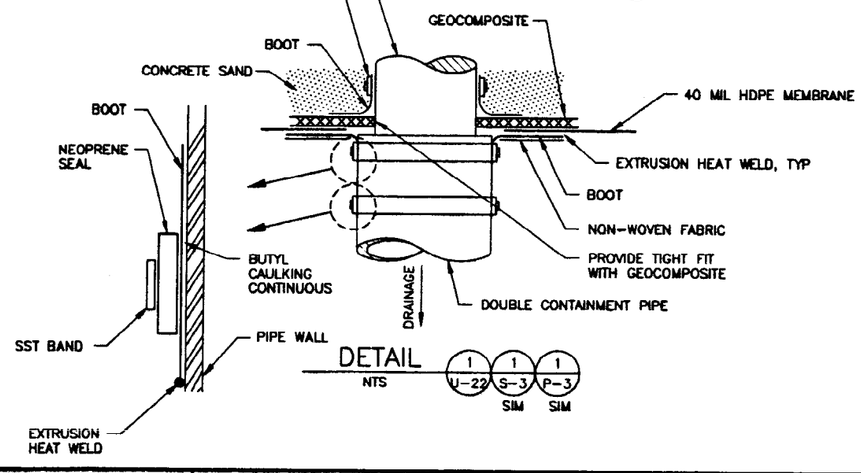

DETAIL 1 U-22 / 1 S-3 SIM / 1 P-3 SIM
NTS

FOR DRAWING INDEX SEE DRAWING NO. 520003	SUBCONTRACT NO.	INEEL BECHTEL BWXT IDAHO, LLC
SCALE: 1/4" = 1'-0"	REQUESTER: S.A. DAVIES DESIGN: C. KINGSFORD DRAWN: KEITH BRONSON PROJECT NO. 020996 SPEC CODE	INTEC STAGING, STORAGE, SIZING AND TREATMENT FACILITY DETAILS AND SECTIONS
DESIGN PHASE: AFC SAFETY CATEGORY: LSC	FOR REVIEW/APPROVAL SIGNATURES SEE DAR NO. 88704 EFFECTIVE DATE: 3/18/2002	SIZE D; CAGE CODE 01MF3; INDEX CODE NUMBER AREA 200, TYPE 0200, Q. 52, CORC 090; DWG-520028; REV SCALE: NOTED; SHEET U-20

REGISTERED PROFESSIONAL ENGINEER - CIVIL - STATE OF IDAHO 2104 CLINTON O. KINGSFORD

Layout Name: 520028 Date: 02/12/02 - 3:59 P.M.
File: 520028.dwg Path: G:\abr\SSSTF

REVISIONS		
REV	DESCRIPTION	EFFECTIVE DATE:

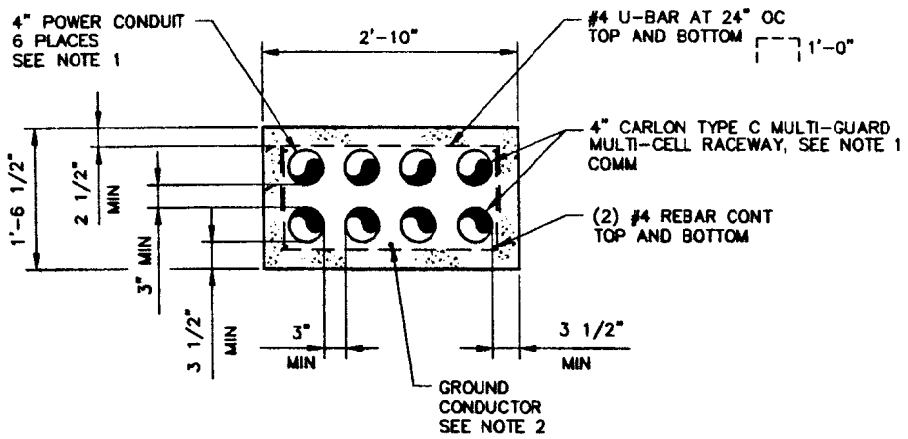

DETAIL 4 TYP
SCALE: 1"=1'-0"

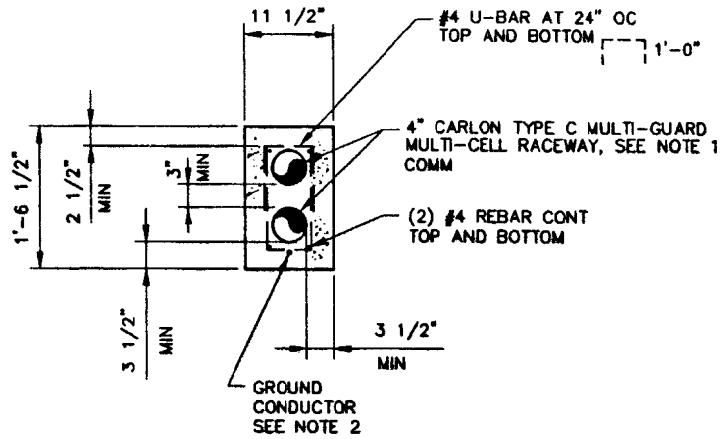

DETAIL 5 TYP
SCALE: 1"=1'-0"

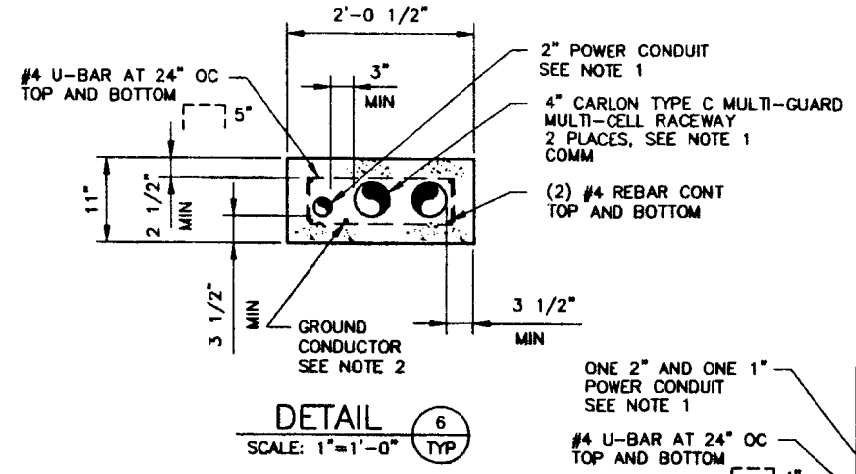

DETAIL 6 TYP
SCALE: 1"=1'-0"

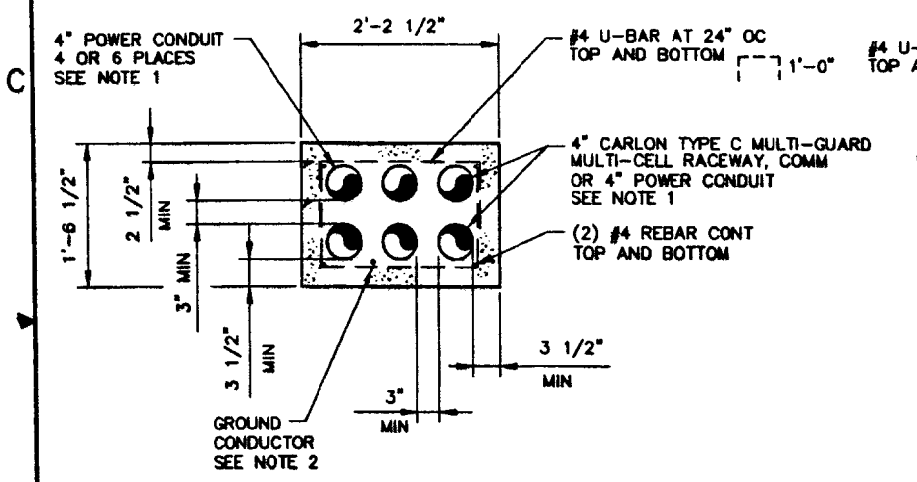

DETAIL 7 TYP
SCALE: 1"=1'-0"

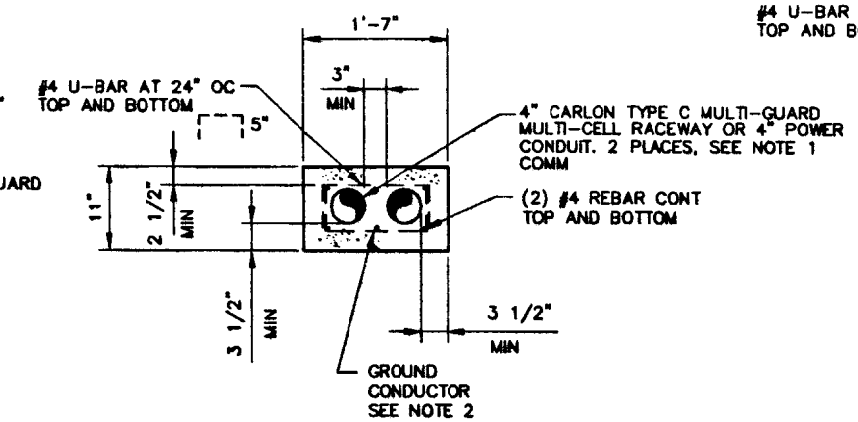

DETAIL 8 TYP
SCALE: 1"=1'-0"

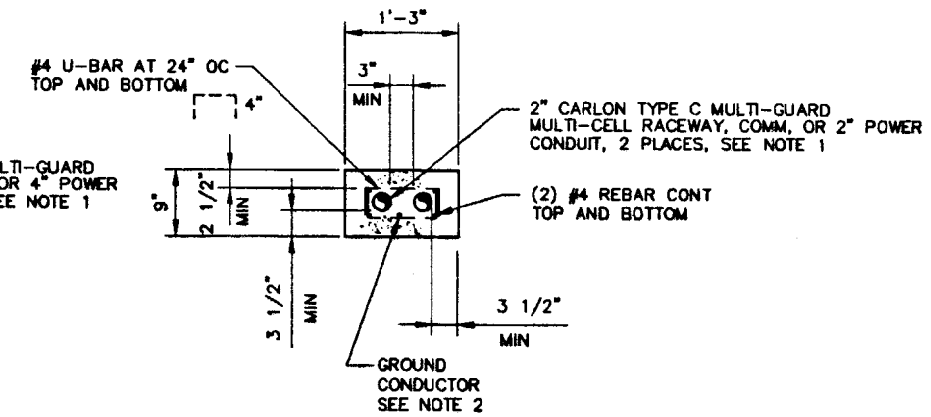

DETAIL 9 TYP
SCALE: 1"=1'-0"

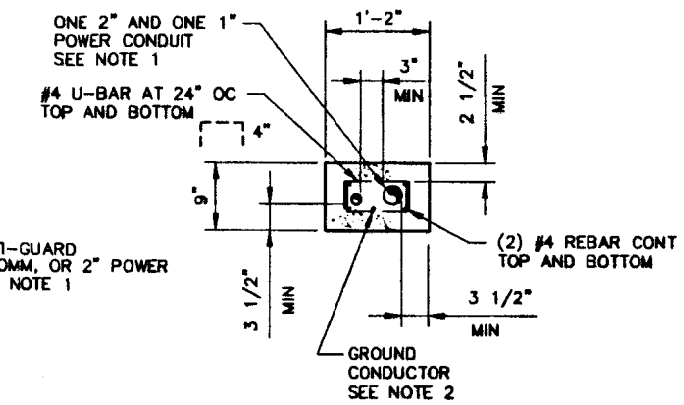

DETAIL 10 TYP
SCALE: 1"=1'-0"

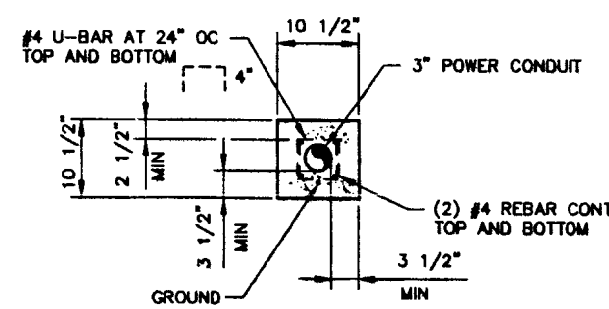

DETAIL 11 TYP
SCALE: 1"=1'-0"

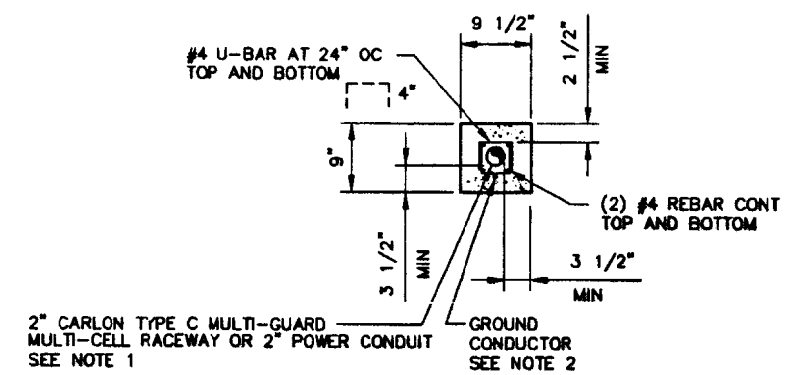

DETAIL 12 TYP
SCALE: 1"=1'-0"

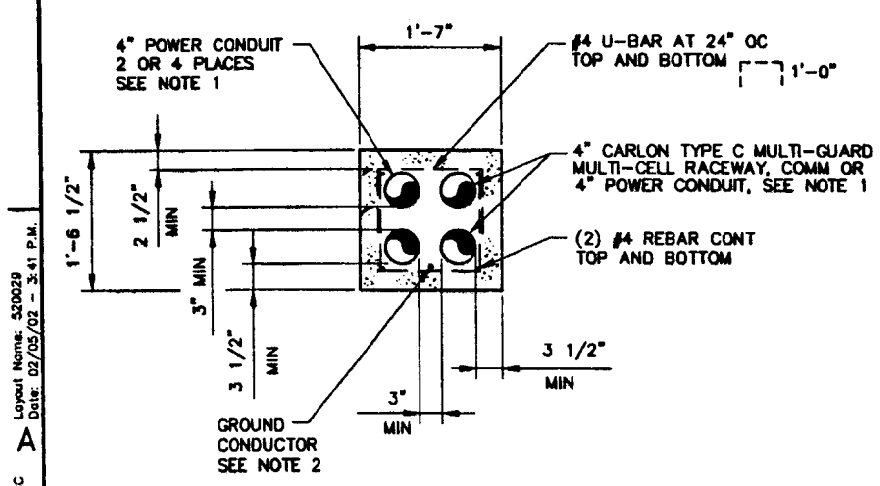

DETAIL 13 TYP
SCALE: 1"=1'-0"

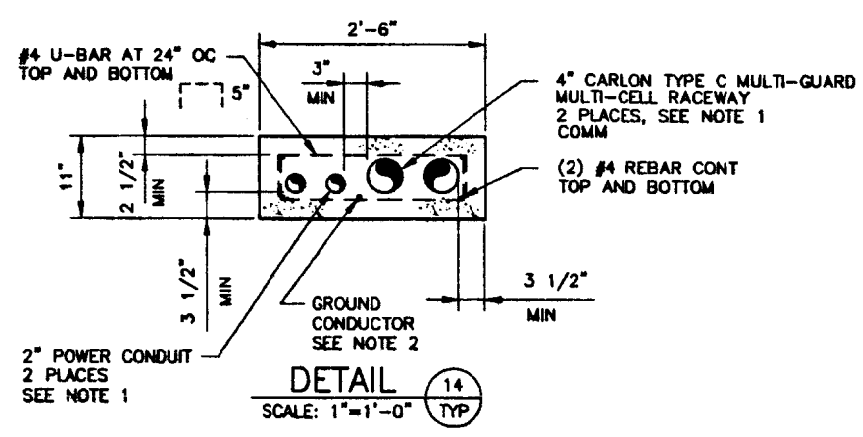

DETAIL 14 TYP
SCALE: 1"=1'-0"

NOTES

1. INSTALL GREENLEE TRUE TAPE IN DUCTS.
2. EMBED A #2/0 BARE STRANDED COPPER GROUNDING CONDUCTOR IN EACH SECTION OF DUCTBANK BETWEEN MANHOLES. PRIOR TO PLACING THE CONCRETE, LAY THE CONDUCTOR ON BOTTOM, OR SUSPEND IT FROM, THE REBAR CAGE. TIE TO THE REBAR AS REQUIRED TO HOLD THE GROUNDING CONDUCTOR IN PLACE DURING THE CONCRETE POUR. BRING EACH END OF THE GROUNDING CONDUCTOR INTO EACH MANHOLE. WHERE A DUCT BANK SPLITS AS IT APPROACHES TWO MANHOLES, SPLICE ON A LENGTH AND FOLLOW EACH DUCT SECTION. INSTALL A GROUND BUS IN EACH MANHOLE OR HANDHOLE AND TIE ALL GROUNDS TO THE BUS. SEE GROUND BUS DETAIL ON SHEET U-22.
3. DUCT BANK RED CONCRETE SHALL BE 2000 PSI.
4. PROVIDE 3" MIN CONCRETE COVER OVER REBAR ON NON-FORMED SIDES OF DUCT BANK.

FOR DRAWING INDEX SEE DRAWING NO. 520003	SUBCONTRACT NO.	INEEL BECHTEL BWXT IDAHO, LLC
SCALE: 1/4" = 1'-0" / SCALE: 1" = 1'-0"	REQUESTER: S.A. DAVIES	INTEC STAGING, STORAGE, SIZING AND TREATMENT FACILITY
	DESIGN: M. SNEDDEN	DUCT BANK DETAILS
	DRAWN: KEITH BRONSON	
	PROJECT NO. 020996	
	SPEC CODE	
DESIGN PHASE: AFC	FOR REVIEW/APPROVAL SIGNATURES SEE DAR NO. 88704	SIZE D; CAGE CODE 01MF3; HOLT CODE NUMBER AREA 200 TYPE 0400 CL 62 DWG 090; DWG-520029; REV
SAFETY CATEGORY: LSC	EFFECTIVE DATE: 3/8/2002	SCALE: NOTED; SHEET U-21

REGISTERED PROFESSIONAL ENGINEER - LAND SURVEYOR 2104 STATE OF IDAHO CLINTON O. KINGSFORD 3-07-02

Layout Name: 520029 Date: 02/05/02 - 3:41 P.M.
File: 520029.dwg Path: G:\dgn\SSSTF

REVISIONS		
REV	DESCRIPTION	EFFECTIVE DATE:

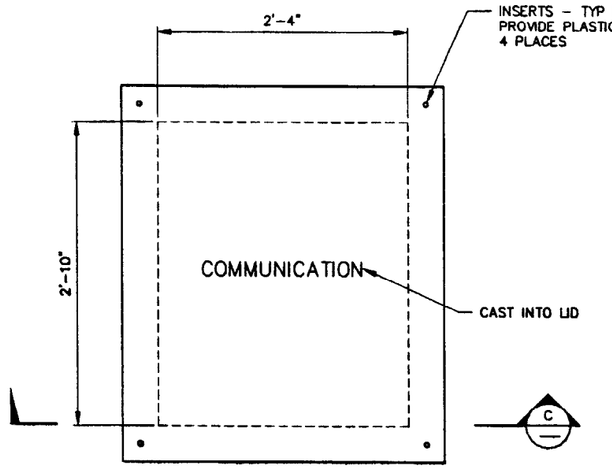

HANDHOLE
DETAIL (15 TYP)
SCALE: 1 1/2"=1'-0"
SEE SHEETS U-3, U-4, U-6, U-13, U-14, U-17

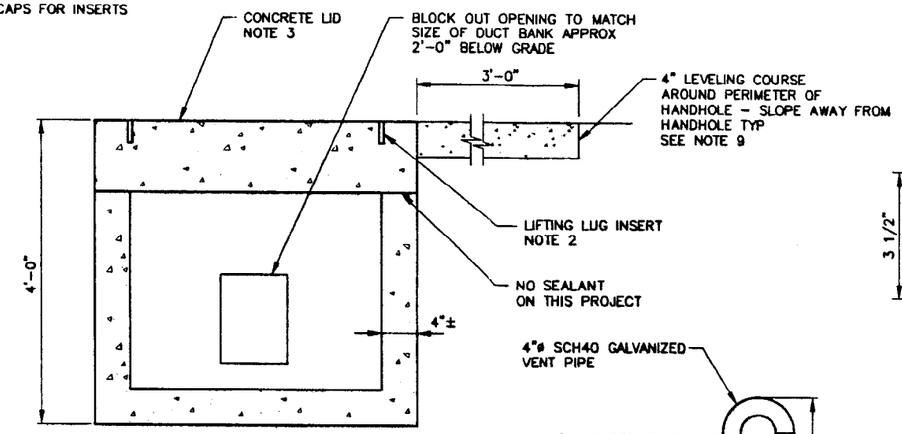

SECTION (C)
SCALE: 1 1/2"=1'-0"

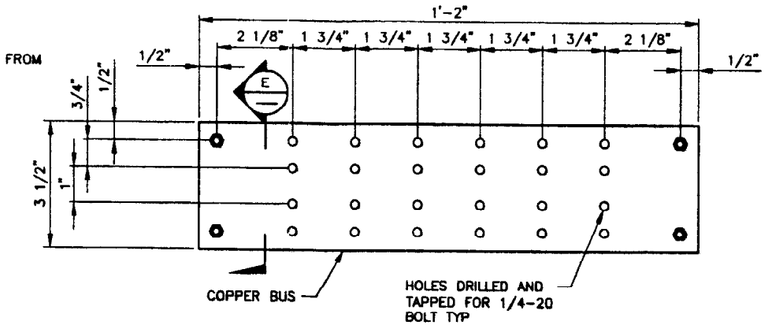

GROUNDING BUS DETAIL (16 TYP)
SCALE: HALF
SEE NOTE 5 AND ELECTRICAL SPEC

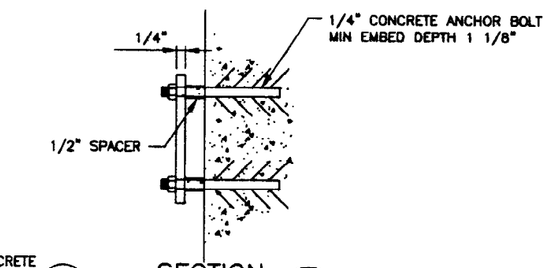

SECTION (E)
SCALE: HALF
(CONNECTION ONLY FOR MANHOLES)

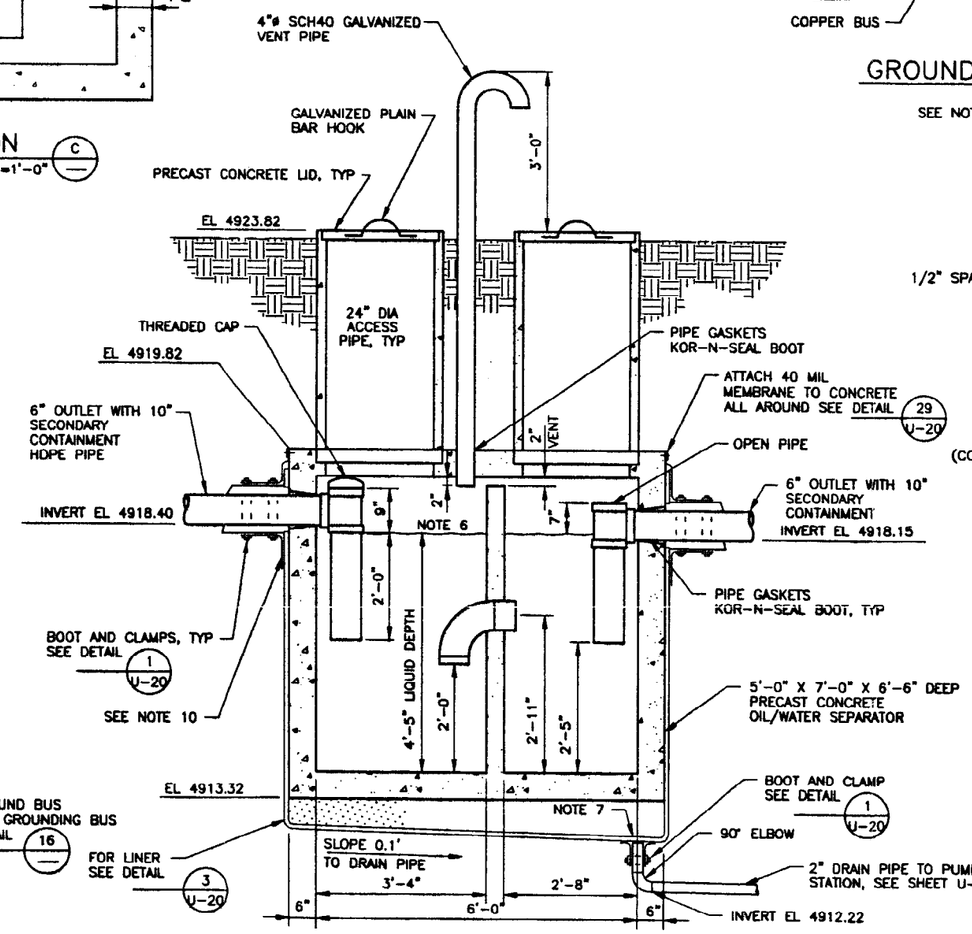

SECTION (F U-23)
SCALE: 3/4"=1'-0"

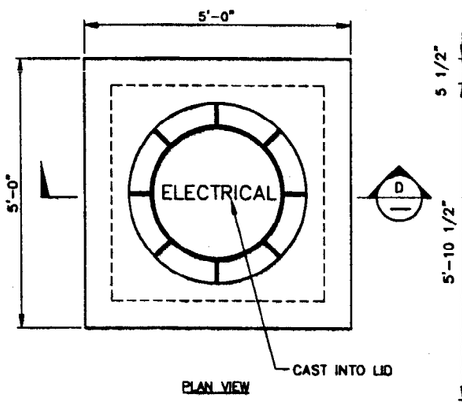

PLAN VIEW

DETAIL (17 TYP)
SCALE: 3/4"=1'-0"
SEE SHEETS U-14, U-16, U-17, E-14

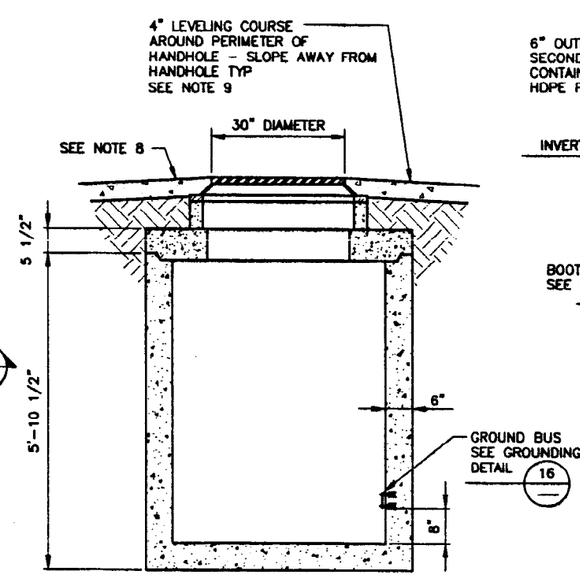

SECTION (D D E-14)
SCALE 3/4"=1'-0"

NOTES

1. VAULTS, RINGS, HANDHOLES, AND COVERS SHALL COMPLY WITH AASHTO HS-20 TRUCK LOADING EXCEPT OIL/WATER SEPARATOR.
2. SUBCONTRACTOR TO PROVIDE LIFTING LUGS AND EYES FOR PULLING CABLE, AND FRAMING CHANNELS AND HARDWARE FOR RACKING CABLES AS REQUIRED.
3. CONCRETE LID SHALL BE REMOVABLE.
4. PROVIDE GRAVEL LEVELING COURSE IN A 9'-0" WIDTH AROUND MANHOLES.
5. BOND ALL EXPOSED METAL COMPONENTS AND BUCKBANK GROUNDS TO THE GROUND BUS.
6. FILL OIL/WATER SEPARATOR WITH WATER TO OPERATING LEVEL PRIOR TO OPERATION.
7. PLACE GEOCOMPOSITE PORTION OF LINER OVER END OF PIPE TO PREVENT SAND FROM GOING INTO PIPE.
8. SEE DRAWING C-2 FOR FINISHED CONTOUR GRADING.
9. PROVIDE ASPHALT CONCRETE IN PAVED AREAS.
10. PROVIDE DRAINAGE PATH FROM 10" PIPE TO LINER.

FOR DRAWING INDEX SEE DRAWING NO. 520003	SUBCONTRACT NO.	INEEL BATTELLE ENERGY ALLIANCE, LLC
SCALE: 3/4" = 1'-0" / SCALE: 1 1/2" = 1'-0"	REQUESTOR: S.A. DAVIES	INTEC STAGING, STORAGE, SIZING AND TREATMENT FACILITY
	DESIGN: J. DUGGAN/M. SNEDDEN	DETAILS AND SECTIONS
	DRAWN: KEITH BROMSON	
	PROJECT NO. 020996	
	SPEC CODE	
DESIGN PHASE: AFC	FOR REVIEW/APPROVAL SIGNATURES SEE DAR NO. 88704	SIZE D; CADD CODE 01MF3; INDEX CODE NUMBER AREA 200 TYPE 0200 CL 62 ORG 090; DWG-520030 REV
SAFETY CATEGORY: LSC	EFFECTIVE DATE: 2/8/2002	SCALE: NOTED; SHEET U-22

REGISTERED PROFESSIONAL ENGINEER 2304 STATE OF IDAHO CLINTON O. KINGSFORD 2/07/02

File: 520030.dwg Path: G:\Ver\SSSTF Layout Name: 520030 Date: 01/30/02 - 6:12 P.M.

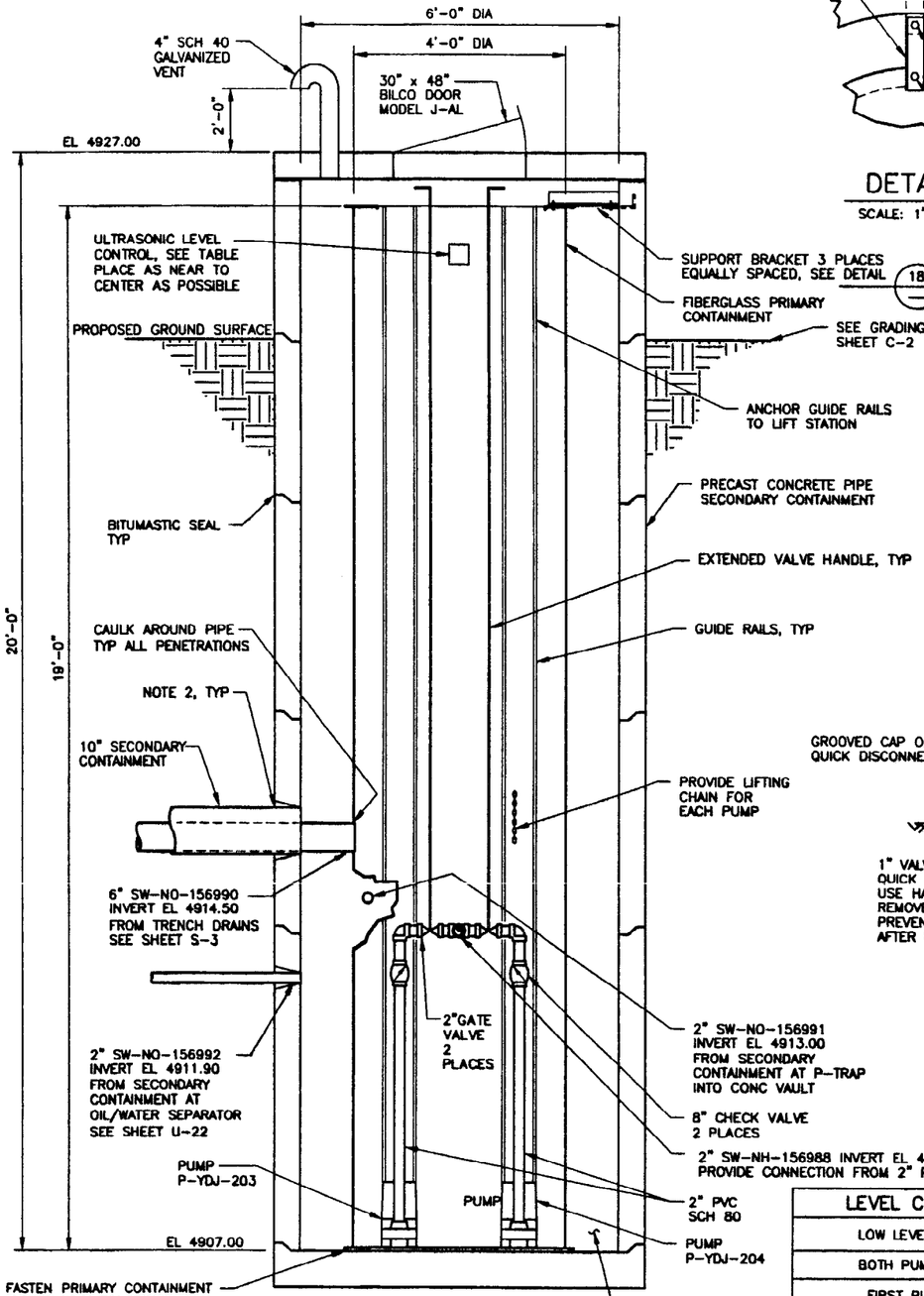

PUMP STATION
SECTION H/S-3
SCALE: 3/4"=1'-0"

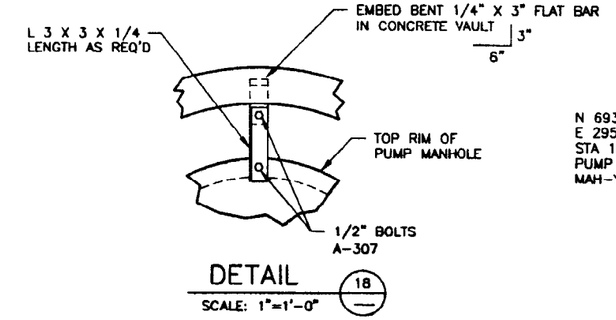

DETAIL 18
SCALE: 1"=1'-0"

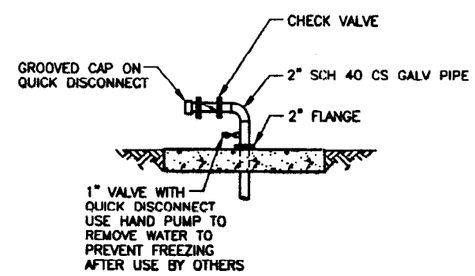

SECTION J
SCALE: 3/4"=1'-0"

LEVEL CONTROL	ELEVATION
LOW LEVEL ALARM	4907.5
BOTH PUMPS-OFF	4908.0
FIRST PUMP ON	4911.5
BOTH PUMPS ON	4911.8
HIGH LEVEL ALARM	4912.0

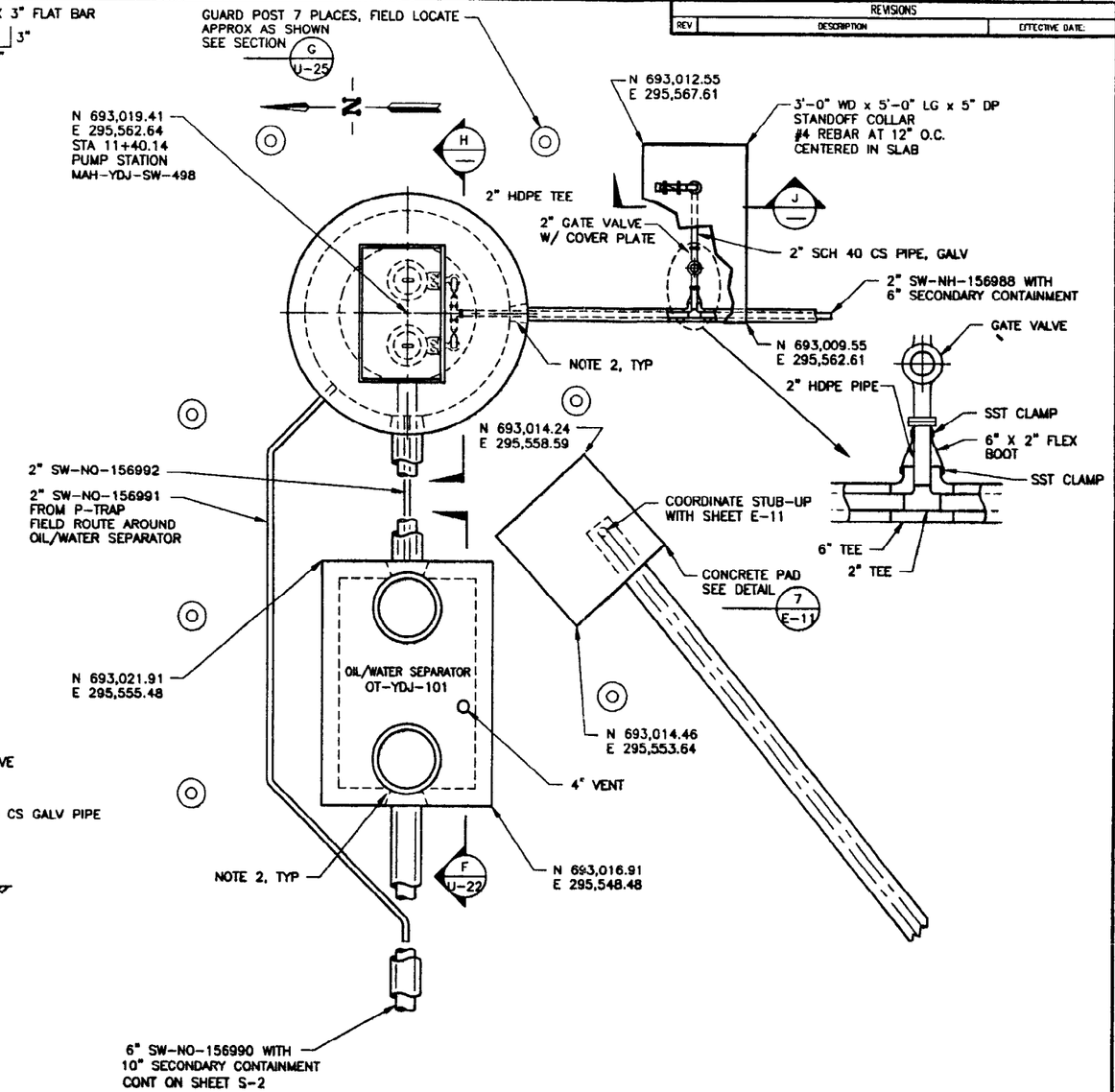

PUMP STATION AND OIL/WATER SEPARATOR PLAN
DETAIL 19/U-18 19/S-2
SCALE: 1/2"=1'-0"

NOTES

1. PUMPS PER SPEC.
2. FOR PIPE PENETRATIONS THRU CONCRETE, CORE DRILL OVER-SIZE HOLE AND USE KOR-N-SEAL FLEXIBLE CONNECTOR.

REGISTERED PROFESSIONAL ENGINEER CLINTON O. KINGSFORD 2406 3-07-02

FOR DRAWING INDEX SEE DRAWING NO.	520003
SCALE: 1/2" = 1'-0"	
SCALE: 3/4" = 1'-0"	
DESIGN PHASE:	AFC
SAFETY CATEGORY:	LSC
SUBCONTRACT NO.	
REQUESTER:	S.A. DAVIES
DESIGN:	M. SNEDDEN
DRAWN:	KEITH BRONSON
PROJECT NO.	020996
SPEC CODE	
FOR REVIEW/APPROVAL SIGNATURES SEE DAR NO. 88704	
EFFECTIVE DATE:	9/12/02

INEEL BATTELLE ENERGY ALLIANCE, LLC

INTEC
STAGING, STORAGE, SIZING AND TREATMENT FACILITY

DETAILS AND SECTIONS

SIZE	CADE CODE	INDEX CODE NUMBER				DWG	REV
		AREA	TYPE	CI	ORIG		
D	01MF3	200	0200	62	090	520031	

SCALE: NOTED
SHEET U-23

REV	DESCRIPTION	EFFECTIVE DATE

REVISIONS

30

FMT-01-REV 3.3

File: 520031.dwg
Path: G:\Ver\SSSTF
Layout Name: 520031
Date: 02/13/02 - 08:23 A.M.

REVISIONS		
REV	DESCRIPTION	EFFECTIVE DATE:

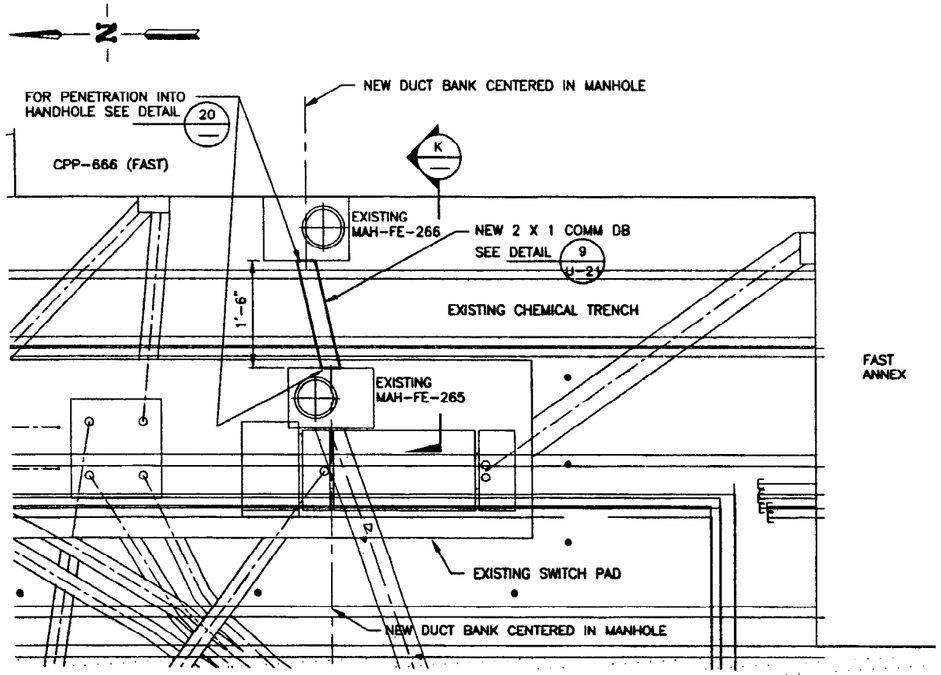

ENLARGED PLAN

SCALE: 1/4"=1'-0"

REF SHEET U-1

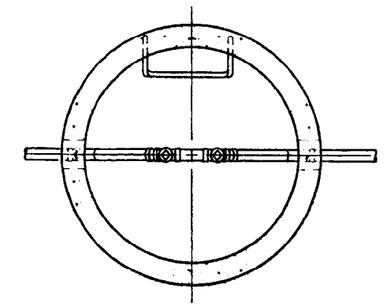

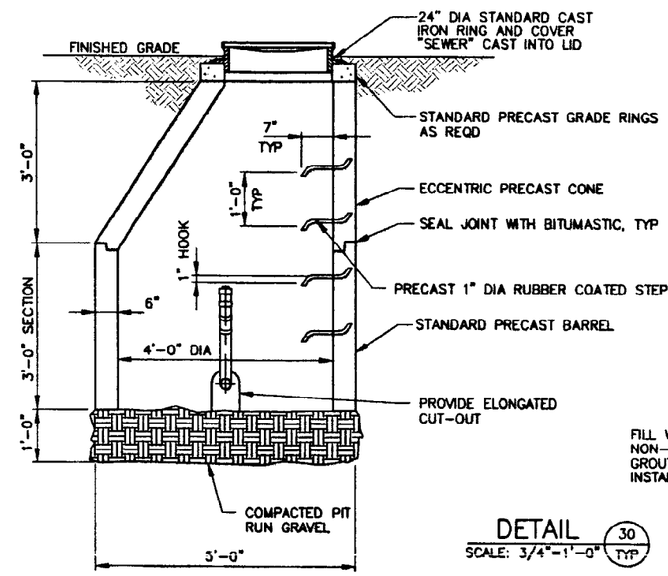

DETAIL

SCALE: 3/4"=1'-0" 30 TYP

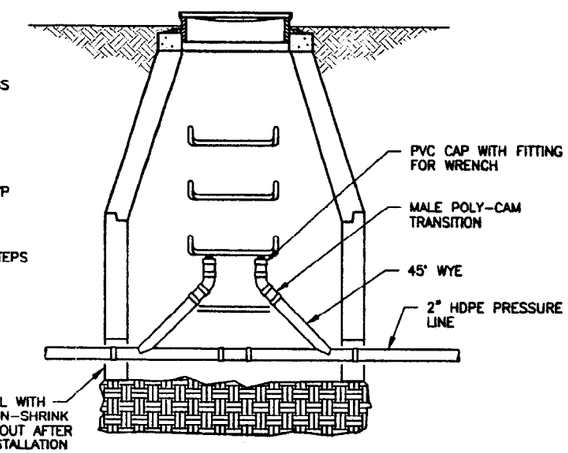

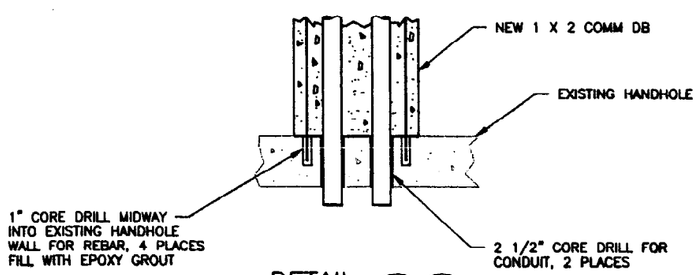

DETAIL

NTS 20 — 20 U-7

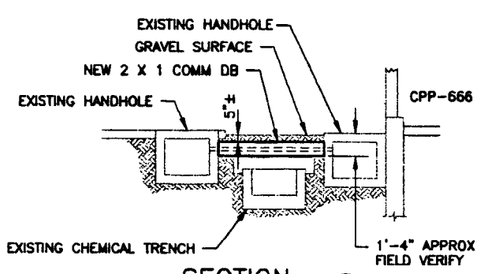

SECTION

SCALE: 1/4"=1'-0" K

XREF DRAWINGS
520110.dwg

REGISTERED 2104 CLINTON O. KINGSFORD

FOR DRAWING INDEX SEE DRAWING NO. 520003	SUBCONTRACT NO.
SCALE: 1/4" = 1'-0" / SCALE: 3/4" = 1'-0"	REQUESTER: S.A. DAVIES
	DESIGN: M. SNEDDEN/T. HIPP
	DRAWN: KEITH BRONSON
	PROJECT NO. 020996
	SPEC CODE
	FOR REVIEW/APPROVAL SIGNATURES SEE DAR NO. 88704
DESIGN PHASE: AFC	EFFECTIVE DATE: 3/11/2002
SAFETY CATEGORY: LSC	

INDEX CODE NUMBER			
AREA	TYPE	CL	ORG
200	0200	52	090

INEEL BATTELLE ENERGY ALLIANCE, LLC

INTEC
STAGING, STORAGE, SIZING AND TREATMENT FACILITY

ENLARGED PLAN, SECTION, AND DETAILS

SIZE	CAGE CODE	INDEX CODE NUMBER				DWG-	REV
		AREA	TYPE	CL	ORG		
D	01MF3	200	0400	10	090	520032	

SCALE: NOTED SHEET U-24

Layout Name: 520032
Date: 01/29/02 - 12:13 P.M.
File: 520032.dwg
Path: G:\dwr\SSSTF

REVISIONS		
REV	DESCRIPTION	EFFECTIVE DATE:

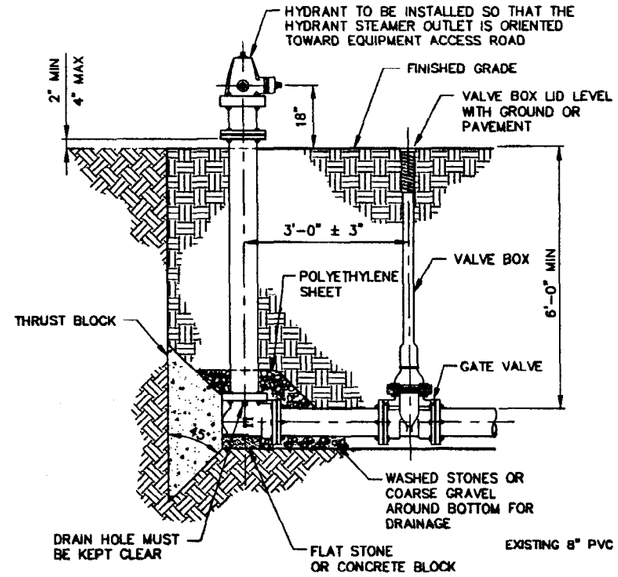

FIRE HYDRANT

DETAIL 21 TYP

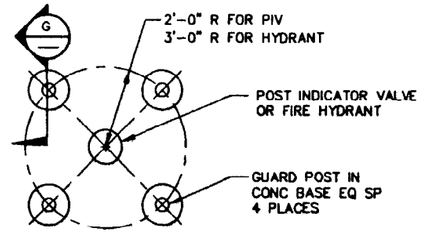

GUARD POST

DETAIL 22 TYP

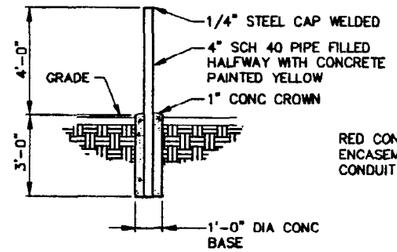

SECTION G TYP

SEE SHEET U-3, U-6, U-23, E-9, E-14

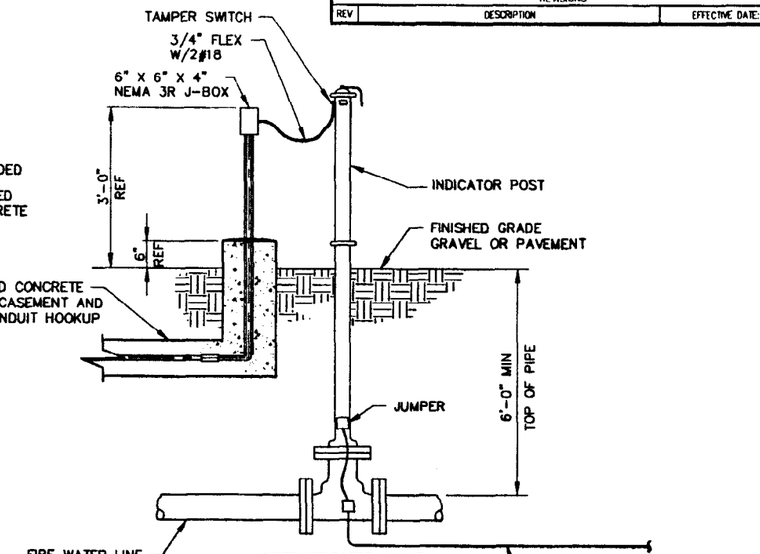

POST INDICATOR VALVE

DETAIL 23 TYP

SEE SHEET U-2, U-3, U-6, U-14, LSS-1

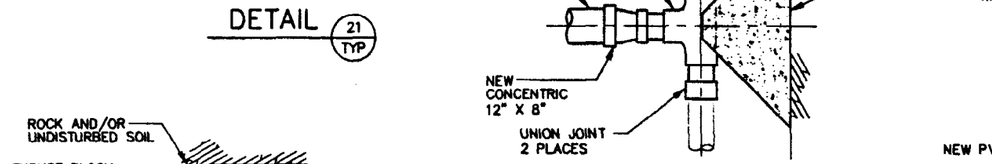

NEW TEE CONNECTION

DETAIL 24 U-6

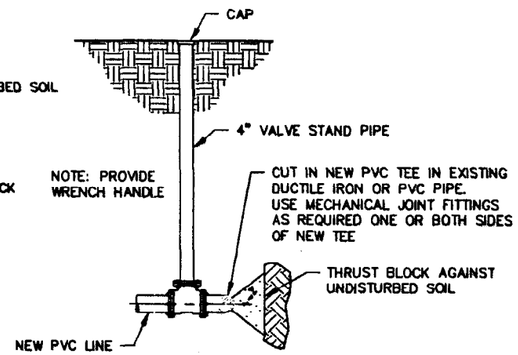

ISOLATION VALVE

DETAIL 25 U-6

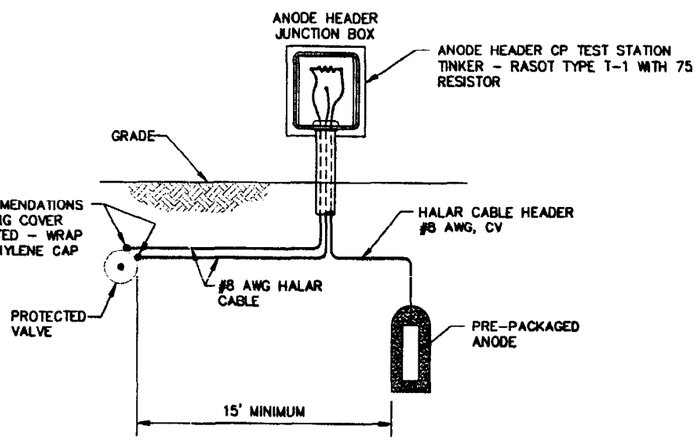

SACRIFICIAL ANODE INSTALLATION

NOTE: 1. PRE-PACKAGED BACKFILL SHALL BE 50% HYDRATED GYPSUM - 50% BENTONITE
2. SACRIFICIAL ANODE - 5 LB. (BARE) GAVOMAG ANODE W/#12 TW LEAD WIRE 10 FT LONG.

DETAIL 31 — 31 U-6

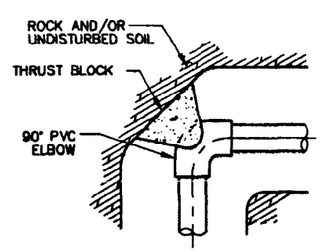

90° ELBOW

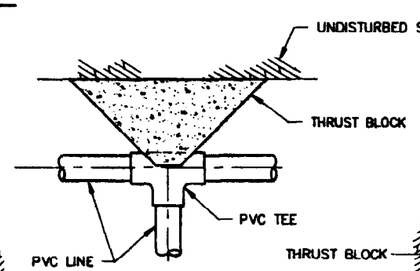

TEE

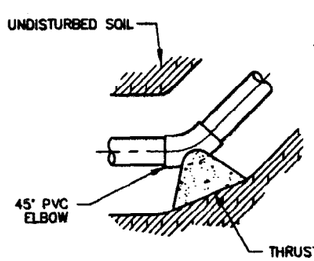

45° ELBOW

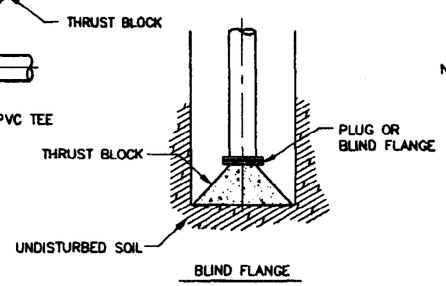

BLIND FLANGE

TYPICAL THRUST BLOCK DETAILS

NOTE: THRUST BLOCKS SHALL BE DESIGNED IN ACCORDANCE WITH NFPA 23.

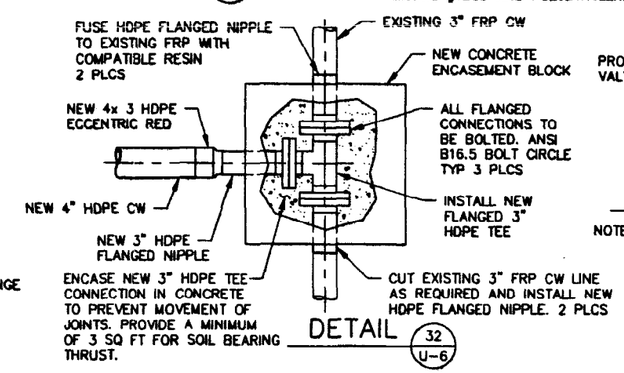

DETAIL 32 U-6

NOTES

1. SIZE ALL THRUST BLOCKS PER NFPA 23 AND THE SPECIFICATIONS.

REGISTERED PROFESSIONAL ENGINEER 2104 STATE OF IDAHO 02-01-02 CLIFTON O. KINGSFORD

FOR DRAWING INDEX SEE DRAWING NO. 520003	SUBCONTRACT NO.	INEEL BECHTEL BWXT IDAHO, LLC
NO SCALE	REQUESTER: S.A. DAVIES DESIGN: LARRY HUNTER DRAWN: KEITH BRONSON PROJECT NO. 020996 SPEC CODE	INTEC STAGING, STORAGE, SIZING AND TREATMENT FACILITY DETAILS AND SECTION
DESIGN PHASE: AFC	FOR REVIEW/APPROVAL SIGNATURES SEE DAR NO. 68704	SIZE D · CAGE CODE 01MF3 · INDEX CODE NUMBER AREA 200 TYPE 0200 Q 52 ORG 090 · DWG-520033 · REV
SAFETY CATEGORY: LSC	EFFECTIVE DATE: 3/11/2002	SCALE: NONE · SHEET U-25

File: 520033.dwg Path: G:\dbr\SSSTF
Layout Name: 520033 Date: 02/07/02 - 3:30 P.M.

REV	DESCRIPTION	EFFECTIVE DATE:
	REVISIONS	

LEVEL CONTROL	ELEVATION	DISTANCE FROM THE BASE (ft)
LOW LEVEL ALARM	4906.0	0.5
BOTH PUMPS-OFF	4906.3	0.8
FIRST PUMP ON	4909.9	4.4
BOTH PUMPS-ON	4910.4	4.9
HIGH LEVEL ALARM	4910.9	5.4

BOTTOM OF BASE ELEVATION = 4905.5

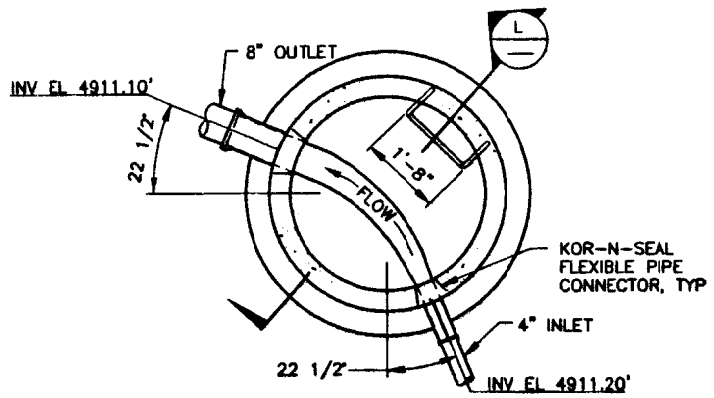

DETAIL (26 / U-2)
SCALE: 3/4"=1'-0"

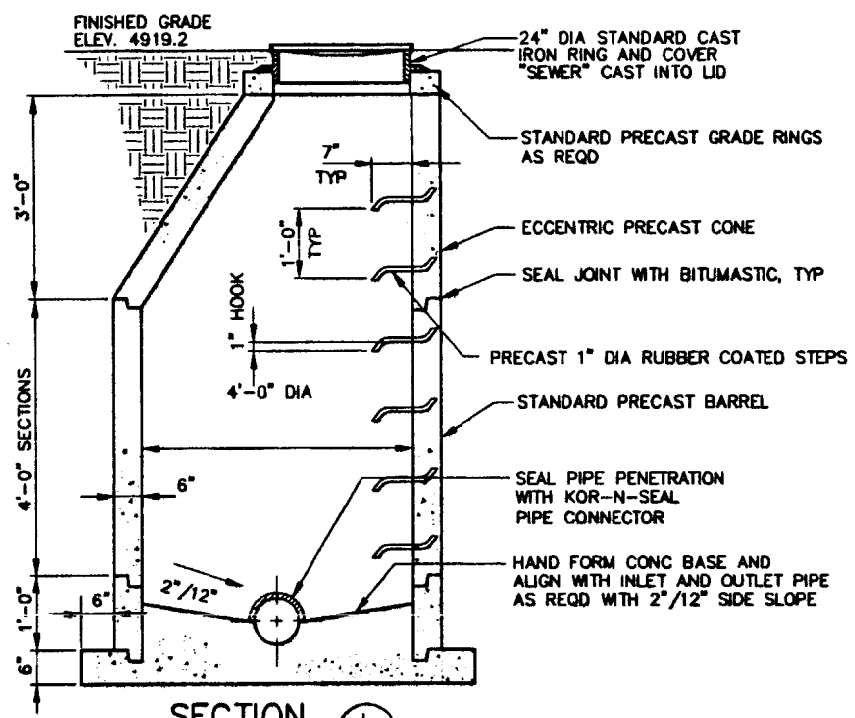

SECTION (L)
SCALE: 3/4"=1'-0"

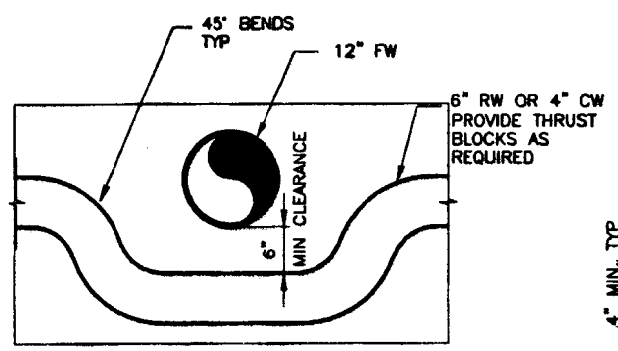

DETAIL (28 / U-2) (28 / U-3) (28 / U-4)
SCALE: 1"=1'-0"

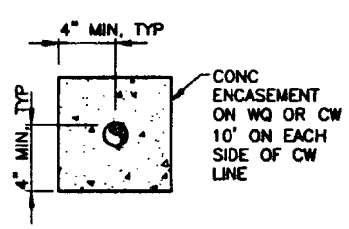

SECTION (P / U-6)
SCALE: 1 1/2"=1'-0"

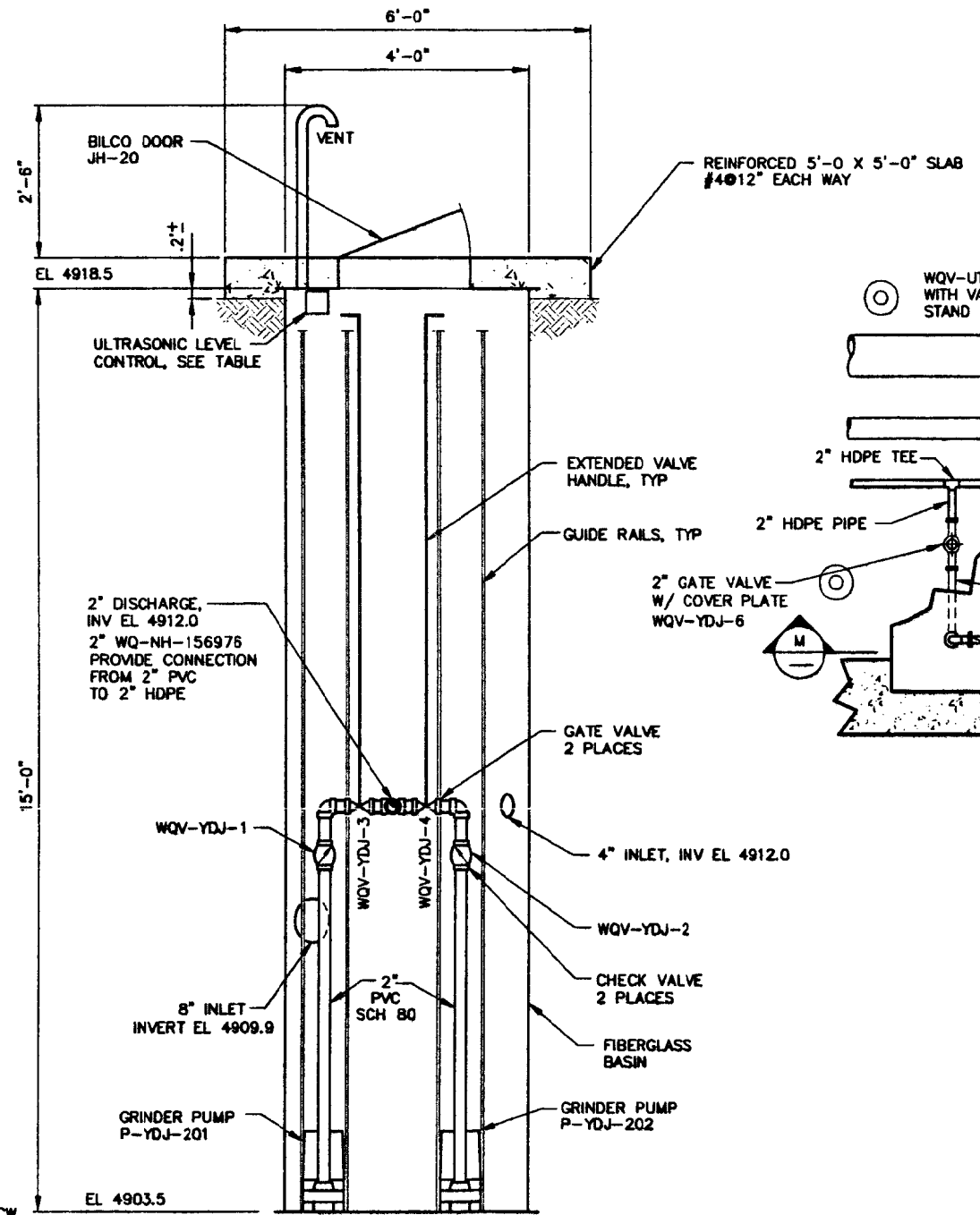

LIFT STATION
SECTION
SCALE: 3/4"=1'-0"

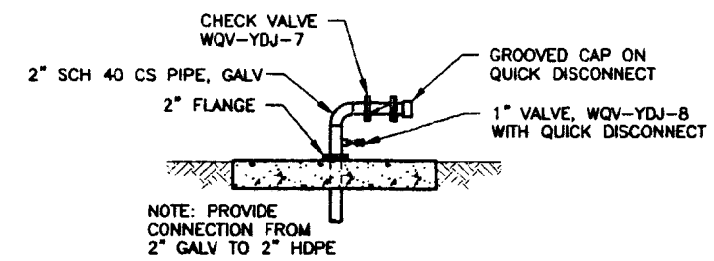

SECTION
SCALE: 3/4"=1'-0"

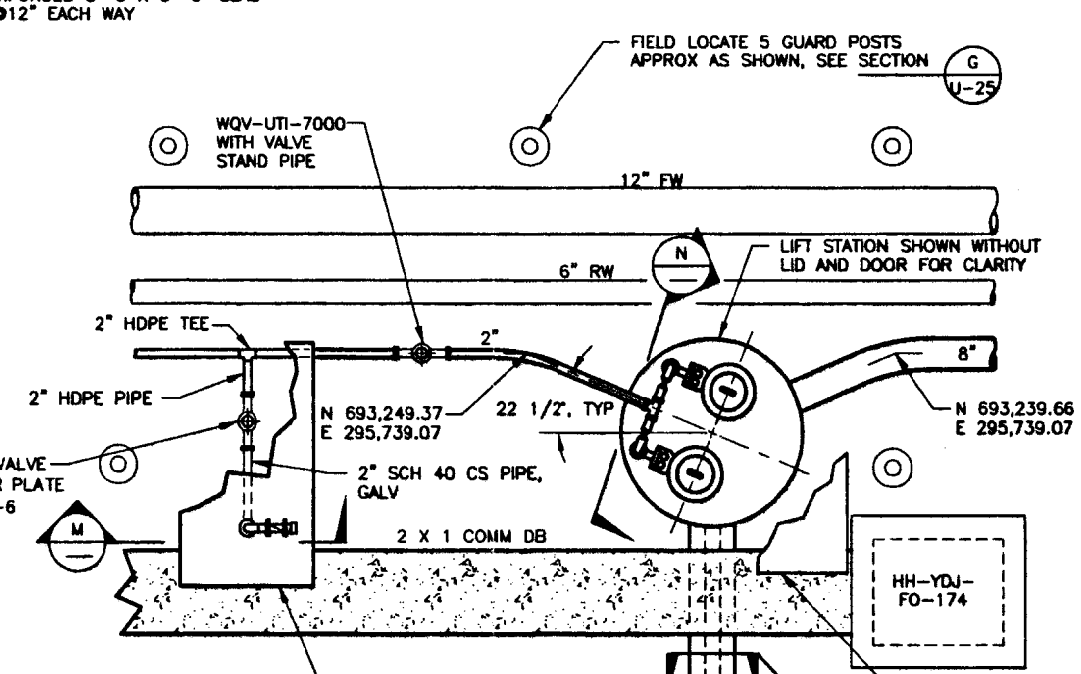

DETAIL (27 / U-3)
SCALE: 1/2"=1'-0"

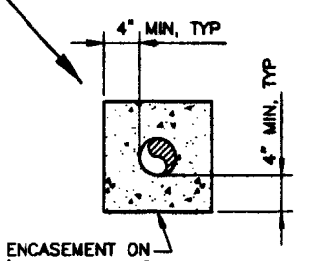

FOR DRAWING INDEX SEE DRAWING NO. 520003

SCALE: 1/2" = 1'-0"

SCALE: 3/4" = 1'-0"

DESIGN PHASE: AFC

SAFETY CATEGORY: LSC

SUBCONTRACT NO.

REQUESTER: S.A. DAVIES

DESIGN: M. SNEDDEN/T. HIPP

DRAWN: KEITH BRONSON

PROJECT NO. 020996

SPEC CODE

FOR REVIEW/APPROVAL SIGNATURES SEE DAR NO. 88704

EFFECTIVE DATE: 3/4/2002

REGISTERED PROFESSIONAL ENGINEER - STATE OF IDAHO - 2104 - CLINTON Q. KINGSFORD

INEEL BECHTEL BWXT IDAHO, LLC

INTEC
STAGING, STORAGE, SIZING AND TREATMENT FACILITY

SECTIONS AND DETAILS

SIZE	CAGE CODE	BOLX CODE NUMBER				DWG-	REV
		AREA	TYPE	CL	ORG		
D	01MF3	200	0200	52	090	520034	

SCALE: NOTED

SHEET U-26

File: 520034.dwg
Path: G:\sbd\SSSTF
Layout Name: 520034
Date: 02/11/02 - 11:03 A.M.
ID: MBC

REVISIONS		
REV	DESCRIPTION	EFFECTIVE DATE:

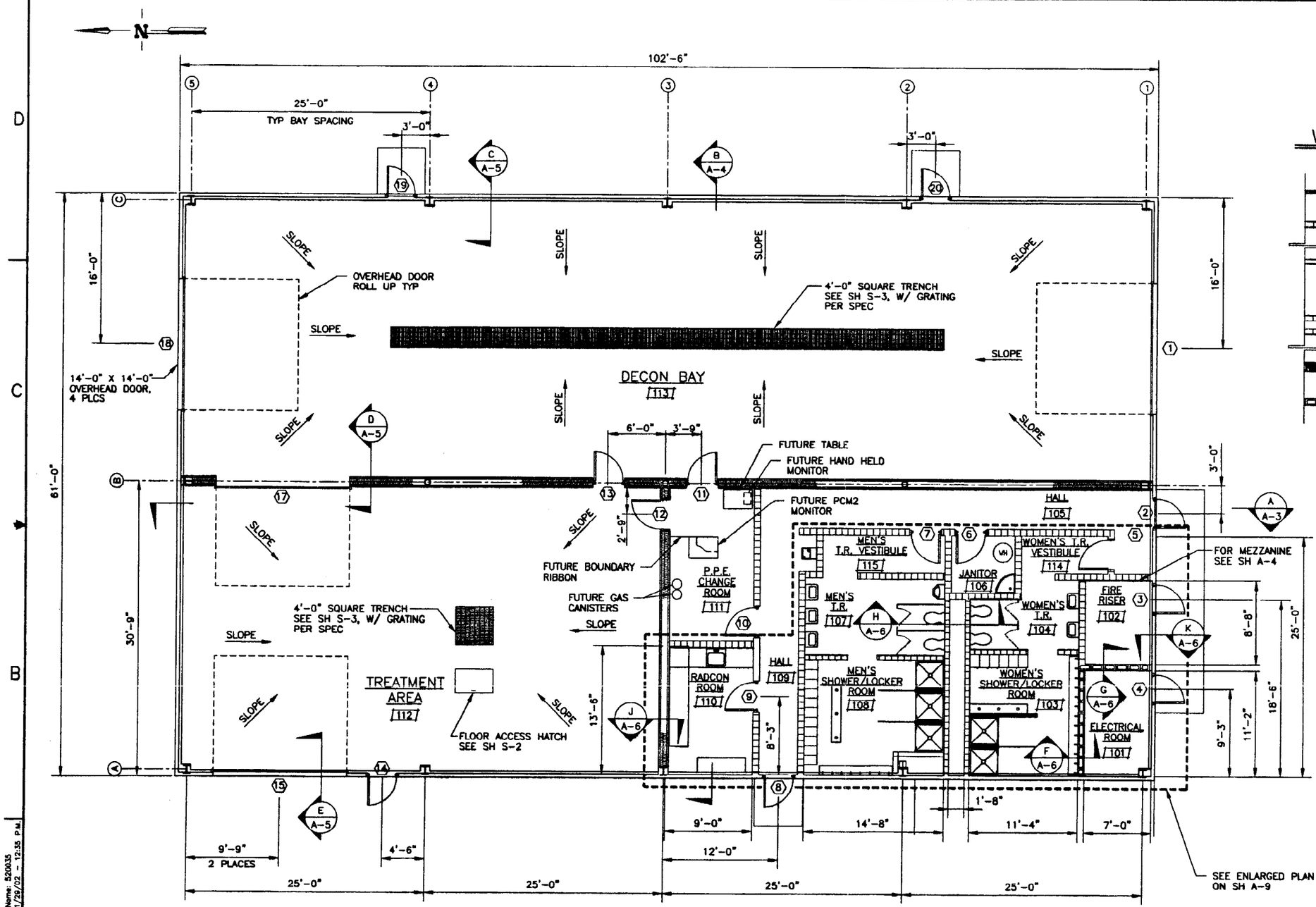

PLAN

WALL KEY:

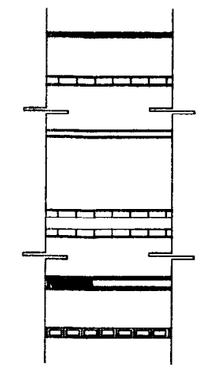

3 1/2" METAL STUDS W/ 5/8" WATER BOARD BOTH SIDES UNLESS NOTED.

8" CMU PRIMED & EPOXY FINISH TO OCCUPIED SIDE. VOIDS FILLED WITH GROUT.

PERIMETER METAL BLDG. WALL W/ BATT INSULATION & 5/8" GYP BOARD & METAL LINER PANEL. OR WATER BOARD WHERE NOTED.

PIPE CHASE WALL (2) ROWS 6" CMU PRIMED & EPOXY FINISH TO OCCUPIED SIDES VOIDS FILLED WITH GROUT

6" METAL STUDS & BATT INSULATION W/ 5/8" GYP BOARD BACKING & METAL LINER PANEL TO HIGH BAY SIDES, TREATMENT AREA & DECON.

UL RATED WALL ASSEMBLY MIN. 1 HR REQUIRED DESIGN NO. U903, 8" CMU WITH FILLED CORES

FLOOR CEILING ASSEMBLY MIN. 1 HR REQUIRED, DESIGN NO J930, 8" H.C. W/2" CONC TOPPING

SEAL ALL PENETRATIONS THRU 1 HR ASSEMBLIES WITH FIRE SEAL

NOTES:

1. GENERAL BUILDING DESIGN:

SQ. FT.	6,253
DESIGN CODES:	GENERAL– UNIFORM BUILDING CODE (1997 EDITION) CONCRETE– ACI 318–95 STEEL– AISC 9TH EDITION
UBC OCCUPANCY:	F2
UBC BUILDING TYPE:	II N
DESIGN LOADS:	SNOW– 30 psf, I = 1.0 WIND– PER ASCE 7 EXPOSURE C, I = 1.0 SEISMIC– PER UBC (1997 EDITION) ZONE 2B, I = 1.0, SOIL PROFILE = S_D HOLLOW CORE DEAD = 81 psf HOLLOW CORE LIVE = 125 psf

XREF DRAWINGS
520112.dwg

FOR DRAWING INDEX SEE DRAWING NO. 520003	SUBCONTRACT NO.	INEEL
SCALE: 3/16" = 1'-0"	REQUESTER: S.A. DAVIES DESIGN: D NISHIOKA DRAWN: J.A. LAWRENCE PROJECT NO. 020996 SPEC CODE	INTEC STAGING, STORAGE, SIZING AND TREATMENT FACILITY DECON BUILDING FLOOR PLAN
DESIGN PHASE: AFC	FOR REVIEW/APPROVAL SIGNATURES SEE DAR NO. 88704	SIZE D · CADD CODE 01MF3 · INDEX CODE NUMBER AREA 200 · TYPE 1688 · Q 00 · DISC 090 · DWG-520035 · REV
SAFETY CATEGORY: LSC	EFFECTIVE DATE: 3/8/2002	SCALE: 3/16" = 1'-0" · SHEET A-1

REGISTERED PROFESSIONAL ENGINEER CLINTON O. KINGSFORD 3-01-02

Layout Name: 520035
Date: 01/29/02 – 12:35 P.M.
File: 520035.dwg
Path: G:\Var\SSSTF

REVISIONS		
REV	DESCRIPTION	EFFECTIVE DATE:

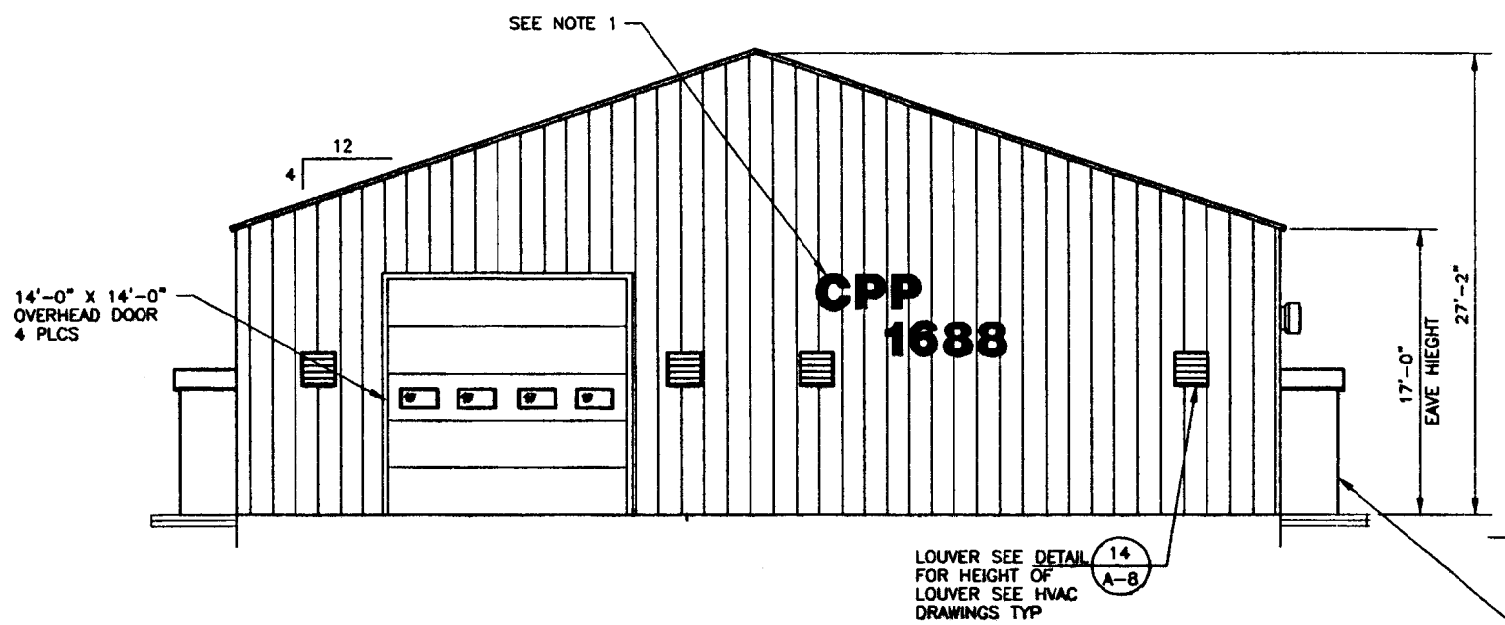

NORTH ELEVATION

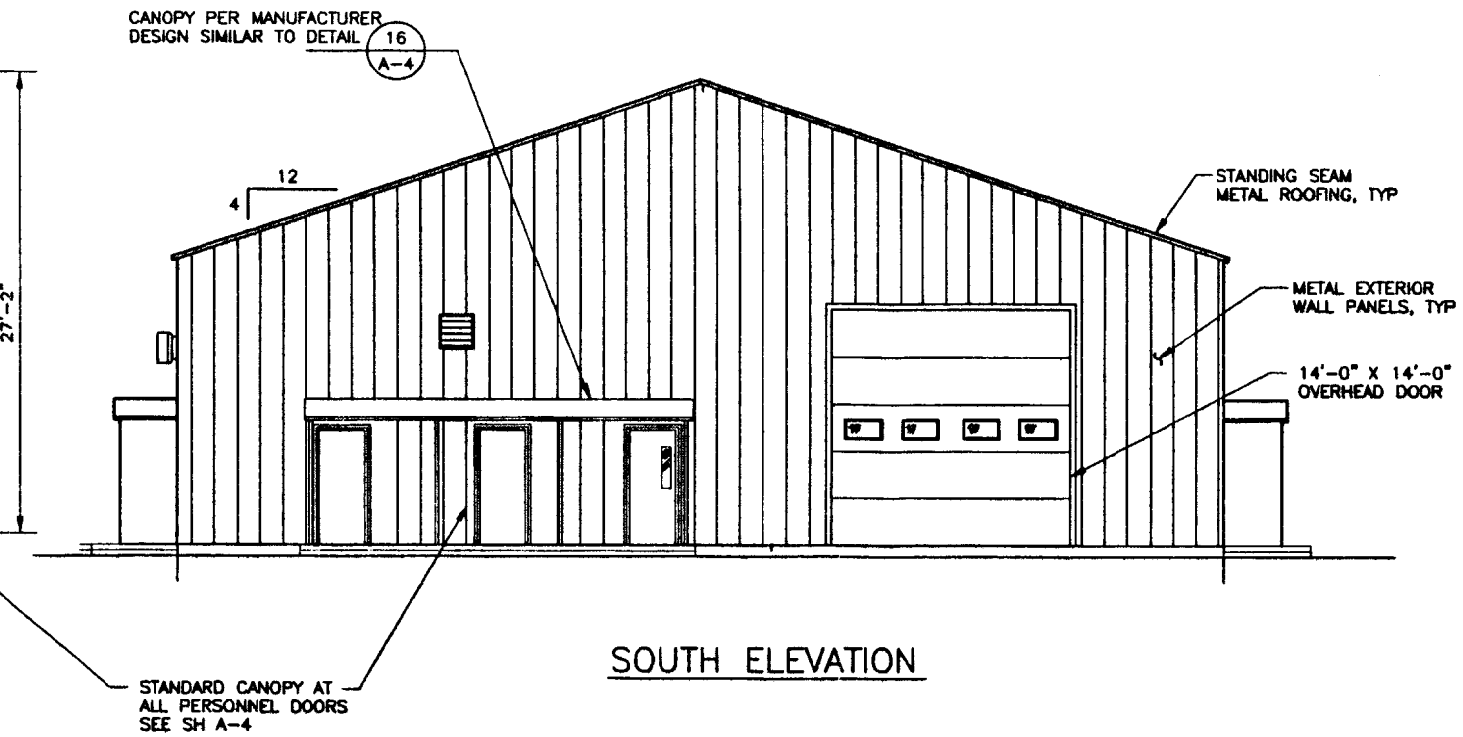

SOUTH ELEVATION

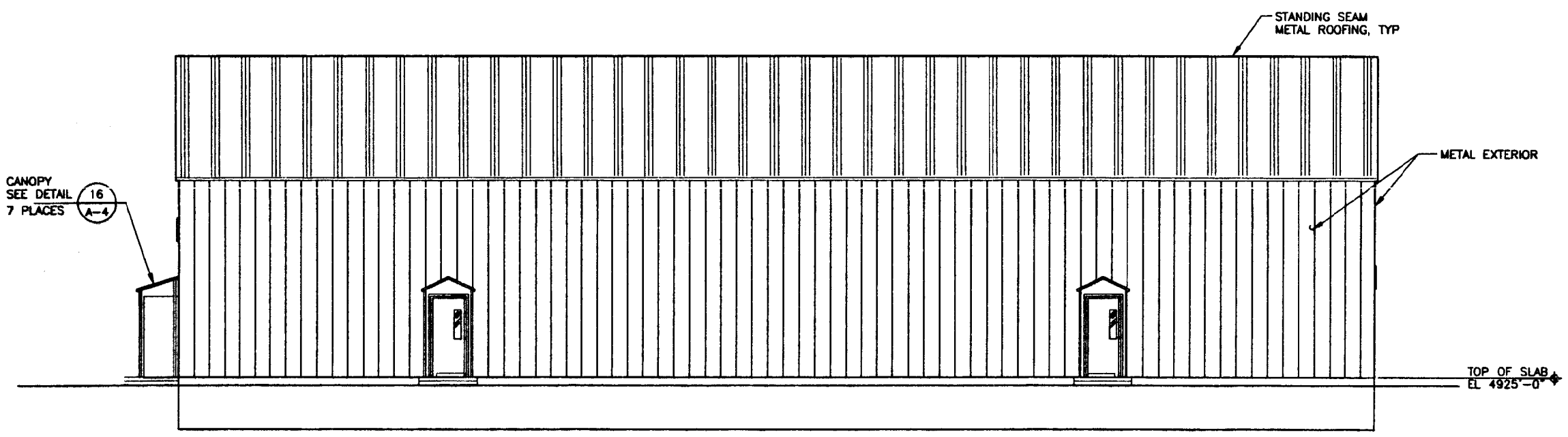

EAST ELEVATION

NOTES

1. PROVIDE AND INSTALL 2'-0" HIGH x 1/2" THICK PLATE ALUMINUM IN BLACK MICROGAMMA BOLD STYLE LETTERS IDENTIFYING CPP-1688 AS SHOWN IN THE CONSTRUCTION DRAWINGS. LETTERS SHALL PROJECT 1 1/2" FROM WALL. INSTALL USING THREADED STUDS, NUTS AND ALUMINUM TUBE SPACERS. SEE SPECIFICATIONS.

XREF DRAWINGS
520112.dwg

FOR DRAWING INDEX SEE DRAWING NO. 520003	SUBCONTRACT NO.	INEEL BECHTEL BWXT IDAHO, LLC
SCALE: 3/16" = 1'-0"	REQUESTER: S.A DAVIES	INTEC STAGING, STORAGE, SIZING AND TREATMENT FACILITY
	DESIGN: D NISHIOKA	DECON BUILDING ELEVATIONS
	DRAWN: J.A. LAWRENCE	
	PROJECT NO. 020996	
	SPEC CODE	
DESIGN PHASE: AFC	FOR REVIEW/APPROVAL SIGNATURES SEE DAR NO. 88704	SIZE D · CAGE CODE 01MF3 · INDEX CODE NUMBER AREA 200 TYPE 1688 Q 00 ORG 090 · DWG-520036 · REV
SAFETY CATEGORY: LSC	EFFECTIVE DATE: 5/16/2002	SCALE: 3/16" = 1'-0" · SHEET A-2

REGISTERED PROFESSIONAL ENGINEER · STATE OF IDAHO · 2-01-02 · CLINTON O. KINGSFORD

Layout Name: elevations
Date: 01/24/02 - 10:41 A.M.

File: 020996-A2.dwg
Path: G:\ksb\SSSTF

REVISIONS		
REV	DESCRIPTION	EFFECTIVE DATE:

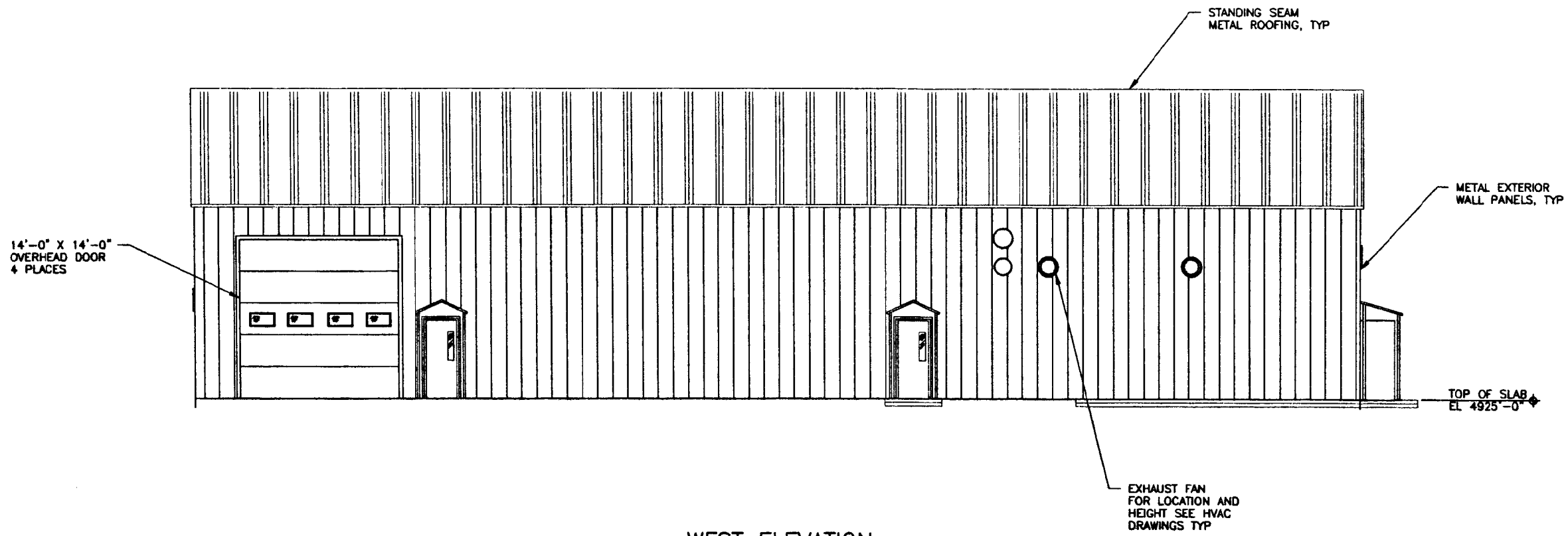

WEST ELEVATION

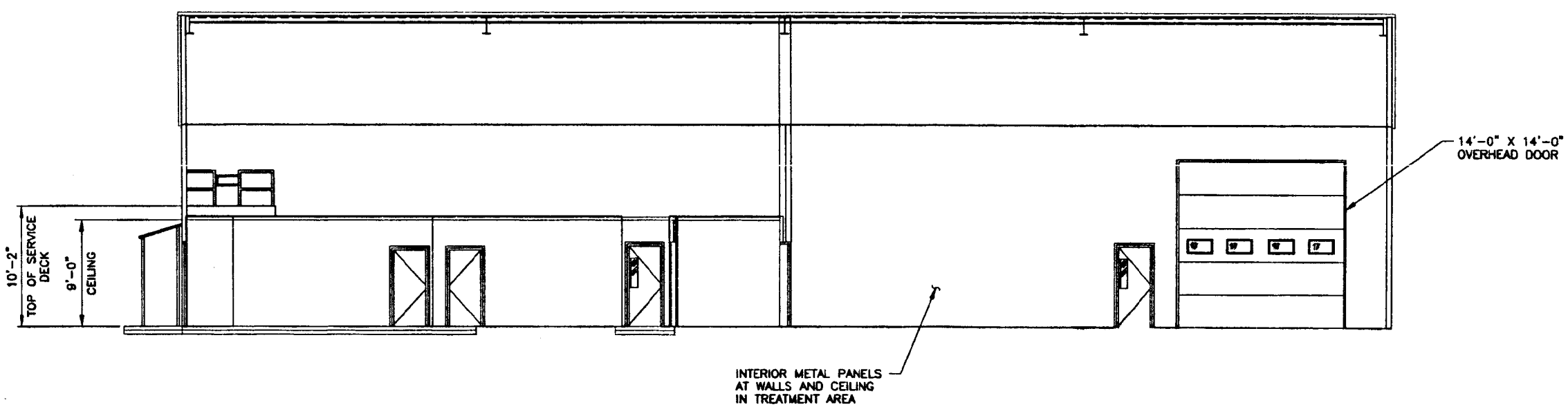

SECTION A / A-1

XREF DRAWINGS
520112.dwg

FOR DRAWING INDEX SEE DRAWING NO. 520003	SUBCONTRACT NO.	INEEL BATTELLE ENERGY ALLIANCE, LLC
SCALE: 3/16" = 1'-0"	REQUESTER: S.A. DAVIES	INTEC STAGING, STORAGE, SIZING AND TREATMENT FACILITY
	DESIGN: D. NISHIOKA	
	DRAWN: J.A. LAWRENCE	
	PROJECT NO. 020996	DECON BUILDING ELEVATIONS AND SECTIONS
	SPEC CODE	
DESIGN PHASE: AFC	FOR REVIEW/APPROVAL SIGNATURES SEE DAR NO. 88704	SIZE D · CAGE CODE 01MF3 · INDEX CODE NUMBER AREA 200 TYPE 1688 QL 00 DWG 090 · DWG-520037 REV
SAFETY CATEGORY: LSC	EFFECTIVE DATE: 3/8/2002	SCALE: 3/16"=1'-0" · SHEET A-3

REGISTERED PROFESSIONAL ENGINEER · LAND SURVEYOR · STATE OF IDAHO · CLINTON O. KINGSFORD · 2004 · 07-01-02

Layout Name: 520037
Date: 02/05/02 - 3:46 P.M.
File: 520037.dwg
Path: G:\kbr\SSSTF

REVISIONS		
REV	DESCRIPTION	EFFECTIVE DATE:

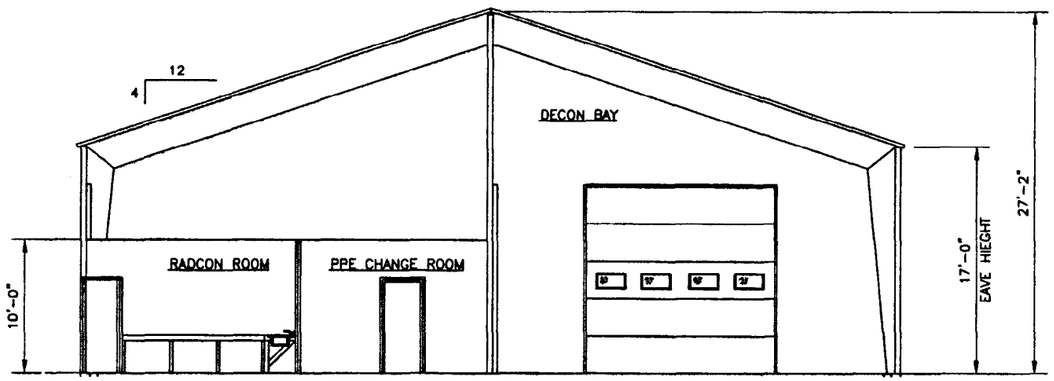

SECTION (B / A-1)
SCALE: 1/4"=1'-0"

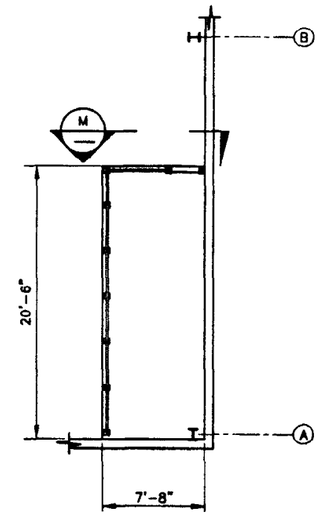

MEZZANINE
SCALE 3/16"=1'-0"
FOR LOCATION OF MEZZANINE AREA SEE SH A-1

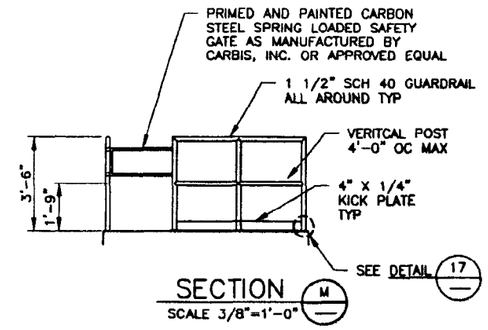

SECTION (M)
SCALE 3/8"=1'-0"

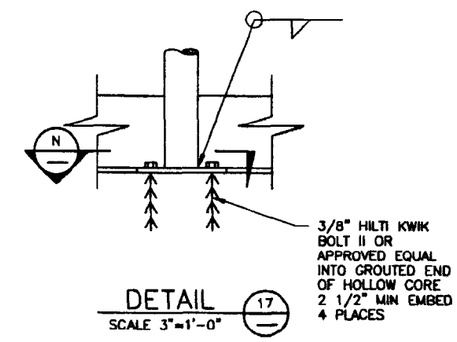

DETAIL (17)
SCALE 3"=1'-0"

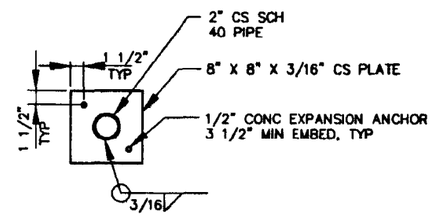

SECTION (P)
NTS
4 PLCS

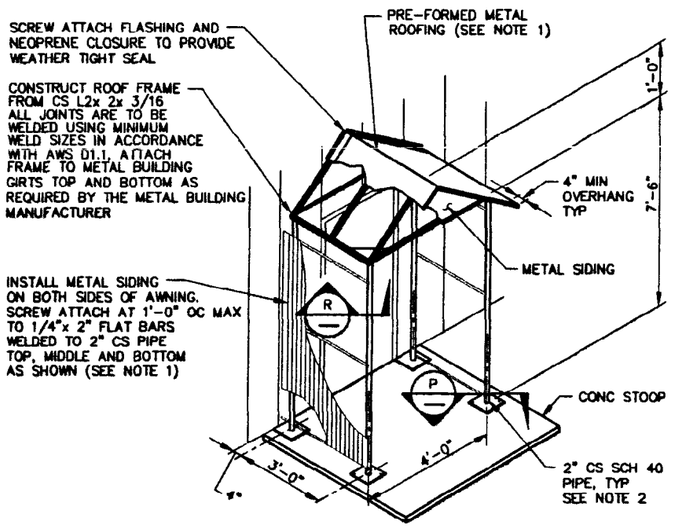

DETAIL (16 / A-2)
NTS

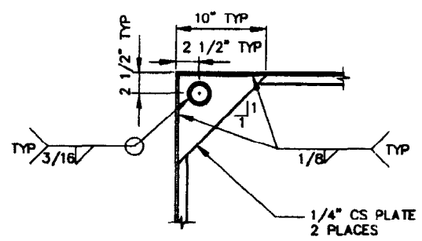

SECTION (R)
NTS

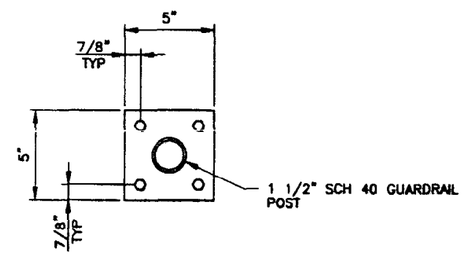

SECTION (N)
SCALE 3"=1'-0"

NOTES

1. METAL SIDING AND ROOFING TO MATCH METAL BUILDING SIDING FOR COLOR, STYLE AND GAGE.
2. PAINT CANOPY FRAMEWORK TO MATCH METAL BUILDING TRIM.

PROFESSIONAL ENGINEER - LAND SURVEYOR REGISTERED 7104 STATE OF IDAHO CLINTON O. KINGSFORD 02.01.02

FOR DRAWING INDEX SEE DRAWING NO. 520003	SUBCONTRACT NO.	INEEL BECHTEL BWXT IDAHO, LLC
SCALE: 1/4" = 1'-0"	REQUESTOR: S.A DAVIES	INTEC STAGING, STORAGE, SIZING AND TREATMENT FACILITY
SCALE: 3" = 1'-0"	DESIGN: D NISHIOKA	DECON BUILDING SECTIONS AND DETAILS
	DRAWN: J.A. LAWRENCE	
	PROJECT NO. 020996	
	SPEC CODE	
DESIGN PHASE: AFC	FOR REVIEW/APPROVAL SIGNATURES SEE DWR NO. 88704	SIZE D; CADE CODE 01MF3; INDEX CODE NUMBER AREA 200, TYPE 1688, CL 00, ORG 090; DWG-520038; REV
SAFETY CATEGORY: LSC	EFFECTIVE DATE: 9/14/2001	SCALE: NOTED; SHEET A-4

Layout Name: 520038
Date: 01/29/02 - 1:05 P.M.
File: 520038.dwg
Path: C:\Ndr\SSSTF

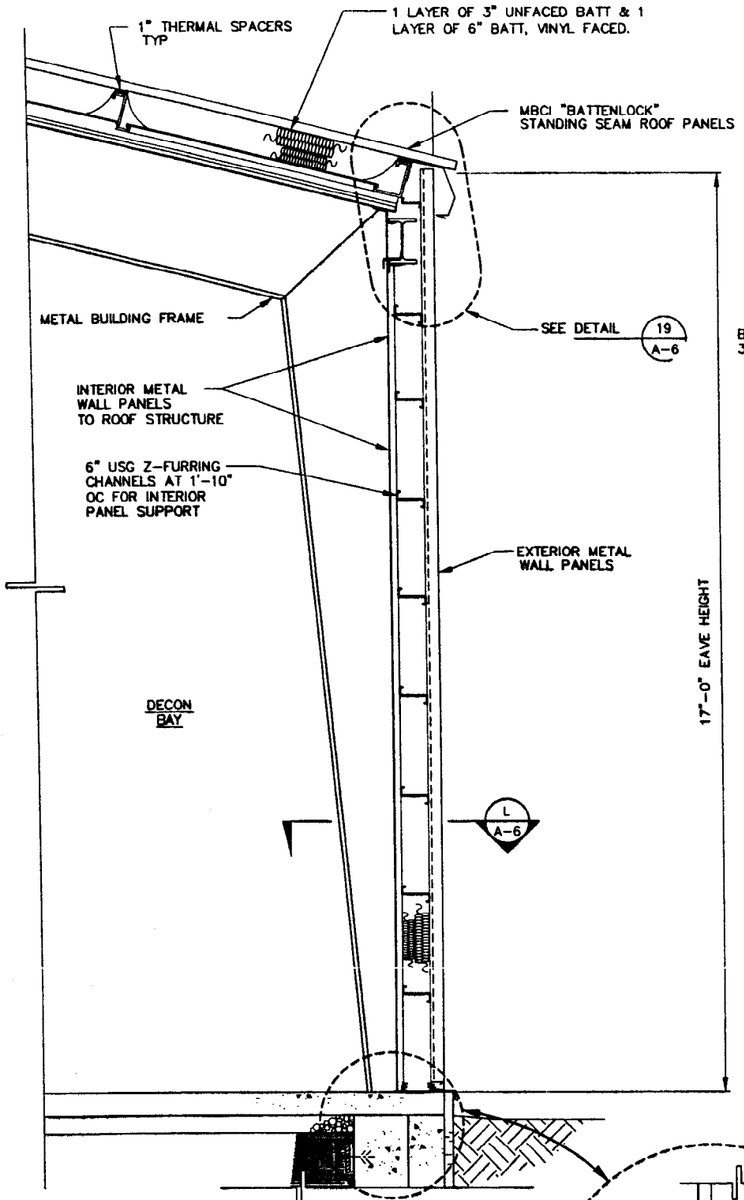

SECTION C TYP EXTERIOR WALL A-1

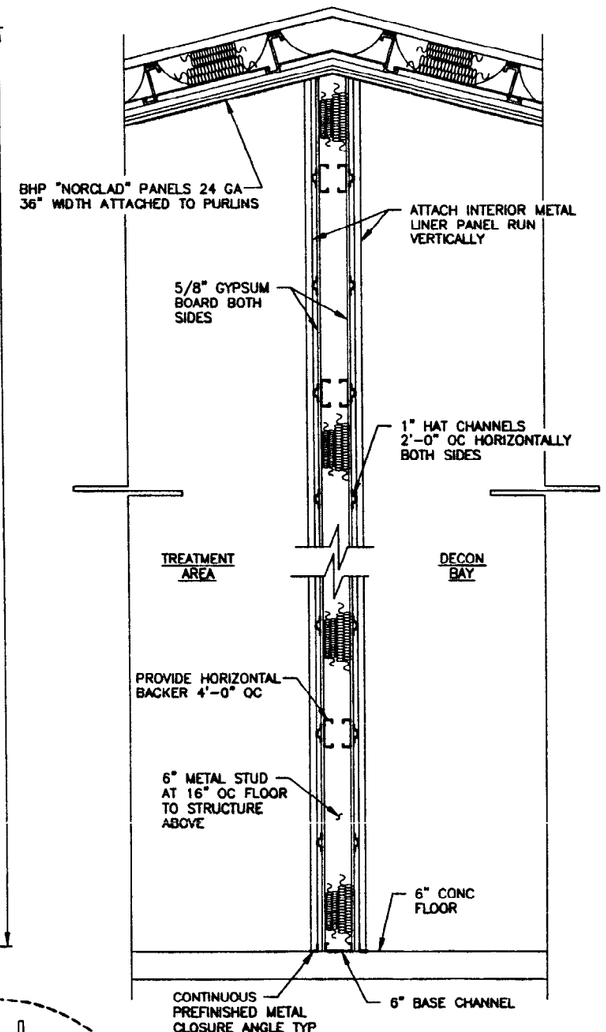

SECTION D A-1

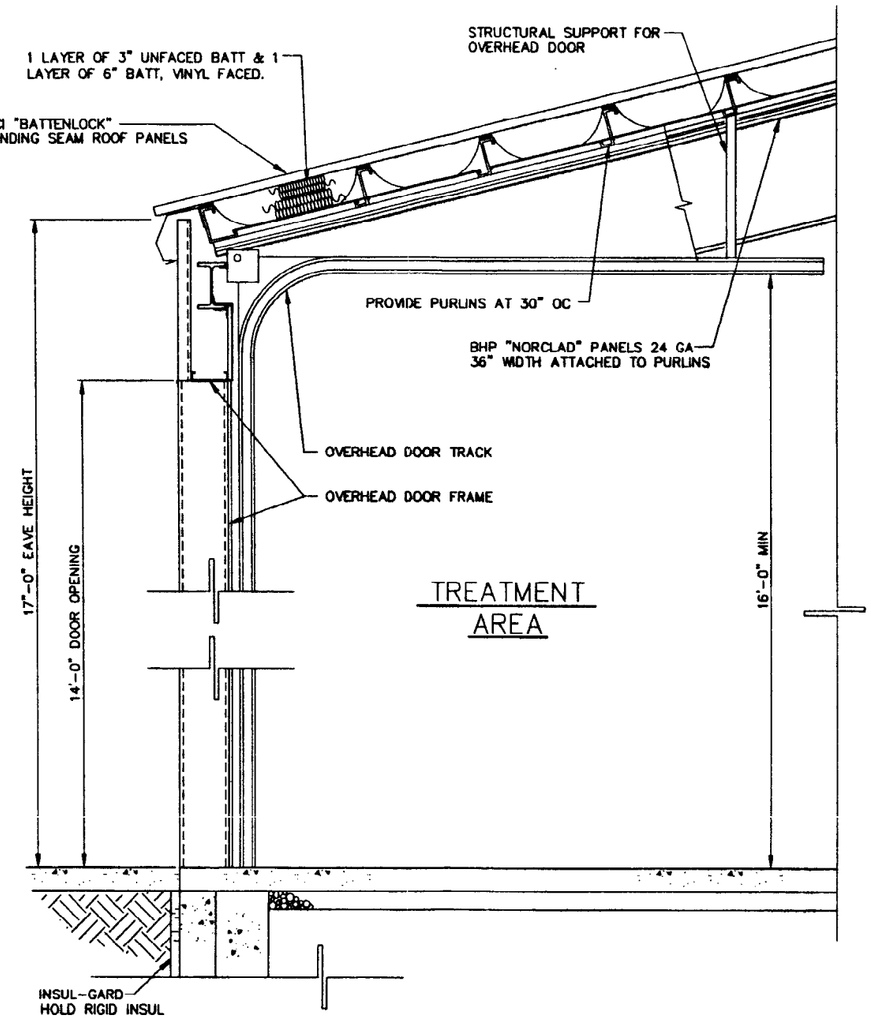

SECTION E A-1 TYP OH DOOR

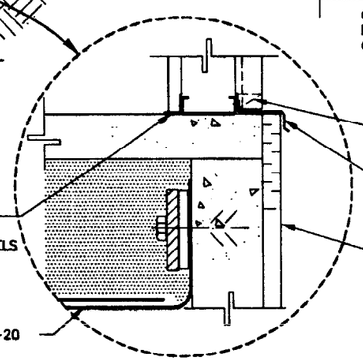

REVISIONS		
REV	DESCRIPTION	EFFECTIVE DATE:

FOR DRAWING INDEX SEE DRAWING NO. 520003

SCALE: 1/8" = 1'-0"

DESIGN PHASE: AFC

SAFETY CATEGORY: LSC

SUBCONTRACT NO.

REQUESTER: S.A. DAVIES

DESIGN: D. NISHIOKA

DRAWN: J.A. LAWRENCE

PROJECT NO. 020996

SPEC CODE

FOR REVIEW/APPROVAL SIGNATURES SEE DAR NO. 88704

EFFECTIVE DATE: 3/14/2002

INEEL

INTEC
STAGING, STORAGE, SIZING AND TREATMENT FACILITY

SECTIONS AND DETAIL

SIZE	CAGE CODE	INDEX CODE NUMBER				DWG	REV
		AREA	TYPE	Q	DISC		
D	01MF3	200	1688	00	090	520039	

SCALE: 1/8"=1'-0"

SHEET A-5

Drawn in Model Space Date: 01/29/02 - 1:12 P.M. ID: MBC

File: 520039.dwg Path: G:\Ken\SSSTF

REVISIONS		
REV	DESCRIPTION	EFFECTIVE DATE:

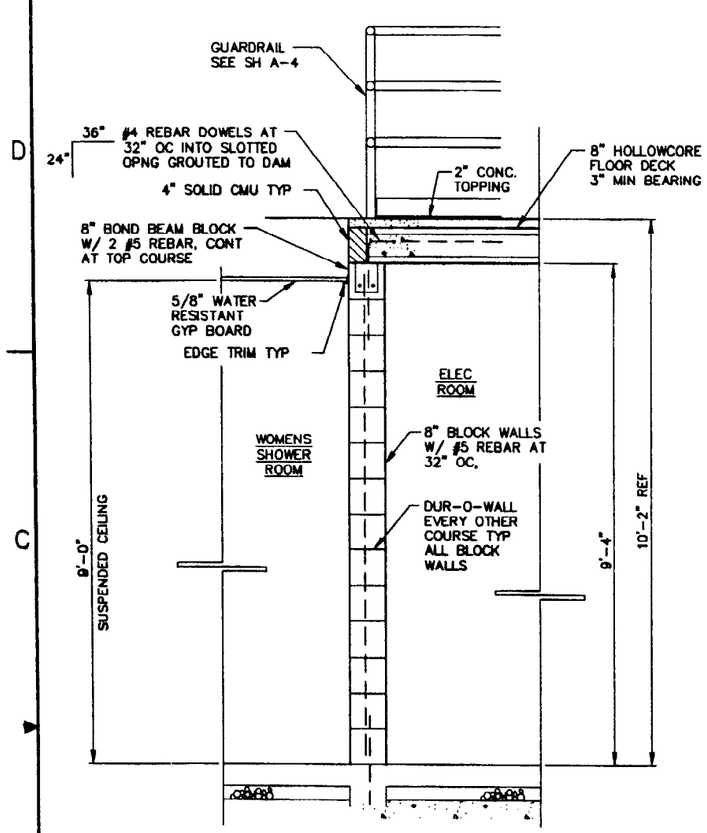

SECTION F A-1

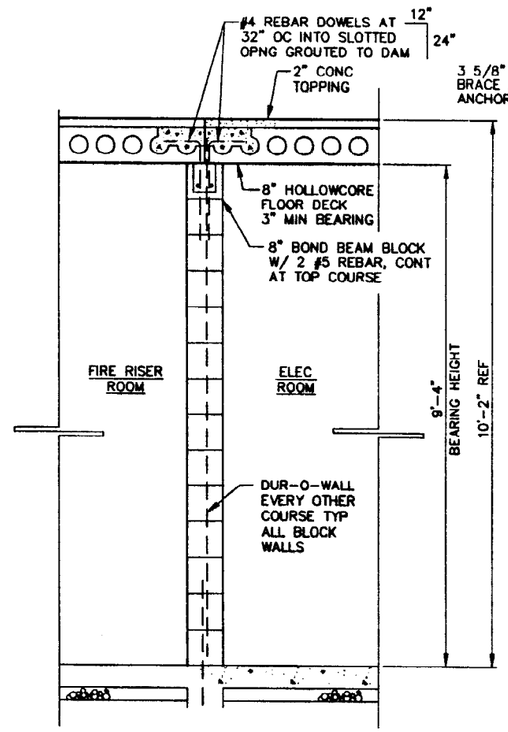

SECTION G A-1

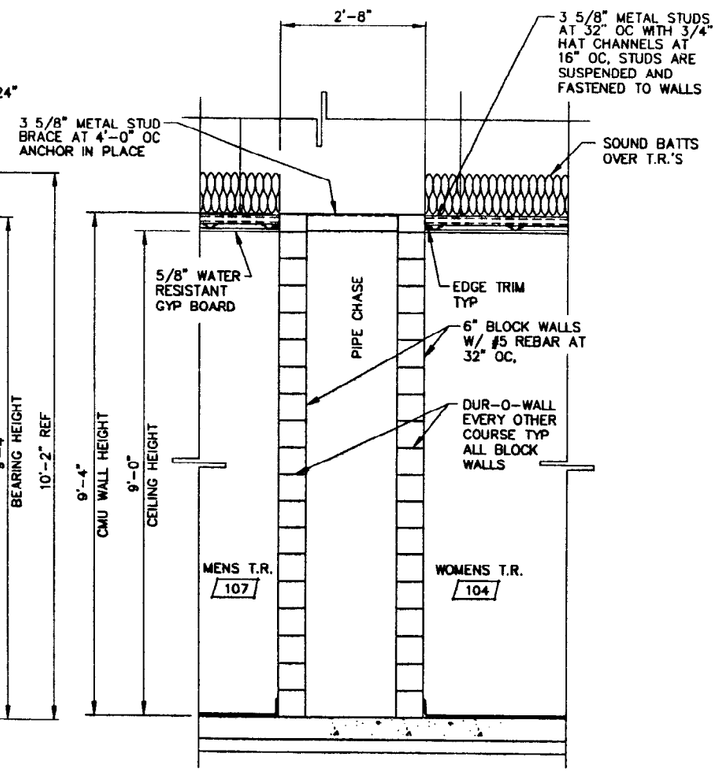

SECTION H A-1

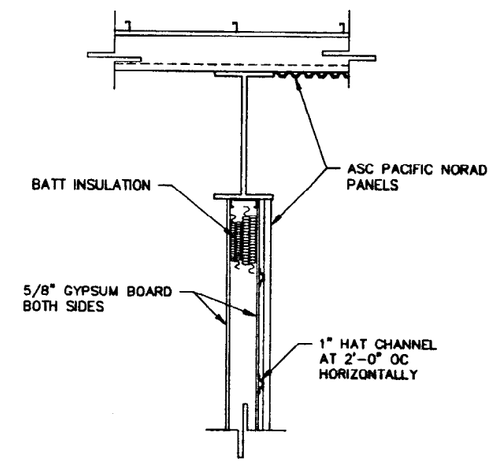

SECTION J A-1

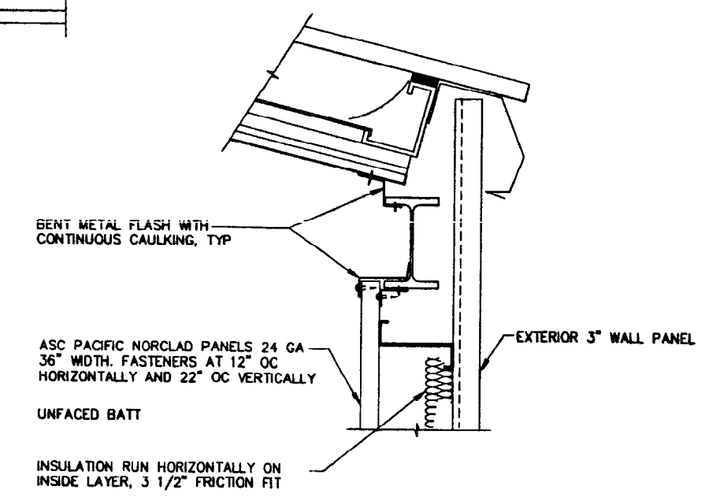

DETAIL 19 A-5
SCALE: 1 1/2"=1'-0"

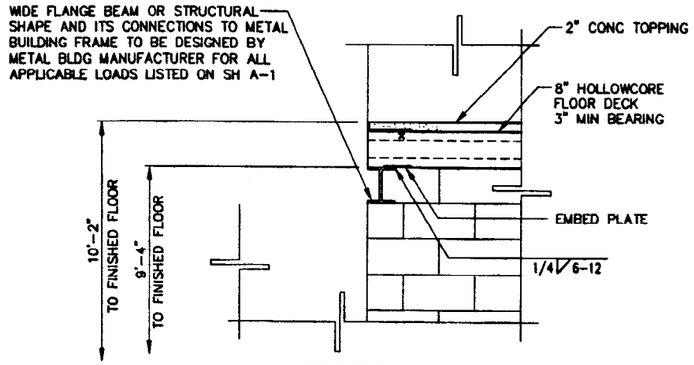

SECTION K A-1

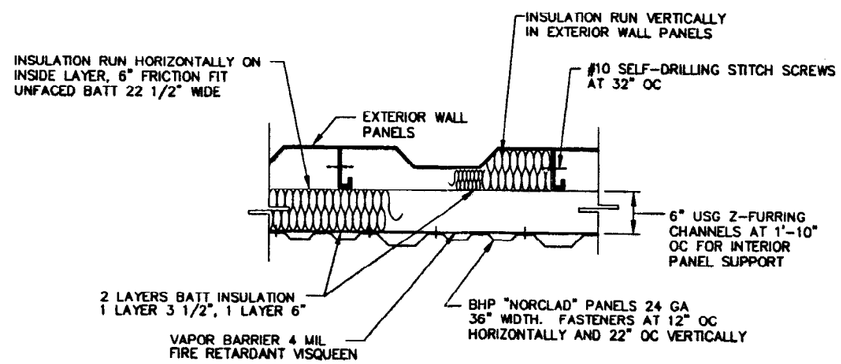

SECTION L A-5

REGISTERED PROFESSIONAL ENGINEER CLINTON O. KINGSFORD STATE OF IDAHO 7104 3-14-02

FOR DRAWING INDEX SEE DRAWING NO. 520003	SUBCONTRACT NO.	INEEL
NO SCALE	REQUESTER: S.A. DAVIES DESIGN: D. NISHIOKA DRAWN: J.A. LAWRENCE PROJECT NO. 020996 SPEC CODE	INTEC STAGING, STORAGE, SIZING AND TREATMENT FACILITY WALL SECTIONS
DESIGN PHASE: AFC	FOR REVIEW/APPROVAL SIGNATURES SEE DAR NO. 88704	SIZE D · CAGE CODE 01MF3 · INDEX CODE NUMBER AREA 200 TYPE 1688 QL 00 ORIG 090 · DWG-520040 · REV
SAFETY CATEGORY: LSC	EFFECTIVE DATE: 3/14/2002	SCALE: NONE · SHEET A-6

File: 520040.dwg
Path: G:\Van\SSSTF
Drawn in Model Space
Date: 01/29/02 - 1:16 P.M.
ID: MDC

REVISIONS		
REV	DESCRIPTION	EFFECTIVE DATE:

DOOR SCHEDULE

MARK	NOMINAL SIZE	TYPE	DOOR MATERIAL	HDWE GROUP	DETAILS HEAD	DETAILS JAMB	DETAILS THRESH	FRAME HOLLOW	FRAME STEEL	FRAME NONE	GLASS TYPE	REMARKS	MARK
1	14'x14'	D	INSULATED	–	3	4	–		●		SAFETY		1
2	3'x7'	B	H.M. INSULATED	1	11	12	13	●			SAFETY		2
3	3'x7'	A	H.M. INSULATED	2	11	12	13	●				SEE NOTES	3
4	3'x7'	A	H.M. INSULATED	2	11	12	13	●				SEE NOTES	4
5	3'x7'	C	H.M. INSULATED	3	1	2	–	●				SEE NOTES	5
6	3'x7'	A	H.M. INSULATED	6	1	2	–	●				SEE NOTES	6
7	3'x7'	C	H.M. INSULATED	3	1	2	–	●				SEE NOTES	7
8	3'x7'	B	H.M. INSULATED	1	11	12	13	●			SAFETY		8
9	3'x7'	B	HOLLOW METAL	5	1	2	–	●			SAFETY		9
10	3'x7'	B	HOLLOW METAL	5	1	2	–	●			SAFETY		10
11	3'x7'	B	HOLLOW METAL	5	7	8	–	●			SAFETY		11
12	3'x7'	B	H.M. INSULATED	5	7	8	–	●			SAFETY		12
13	3'x7'	B	HOLLOW METAL	5	5	6	–	●			SAFETY		13
14	3'x7'	B	H.M. INSULATED	1	11	12	13	●			SAFETY		14
15	14'x14'	D	INSULATED	–	3	4	–		●		SAFETY		15
16	NOT USED												16
17	14'x14'	D	INSULATED	–	9	10	–		●		SAFETY		17
18	14'x14'	D	INSULATED	–	3	4	–		●		SAFETY		18
19	3'x7'	B	H.M. INSULATED	1	11	12	13	●			SAFETY		19
20	3'x7'	B	H.M. INSULATED	1	11	12	13	●			SAFETY		20

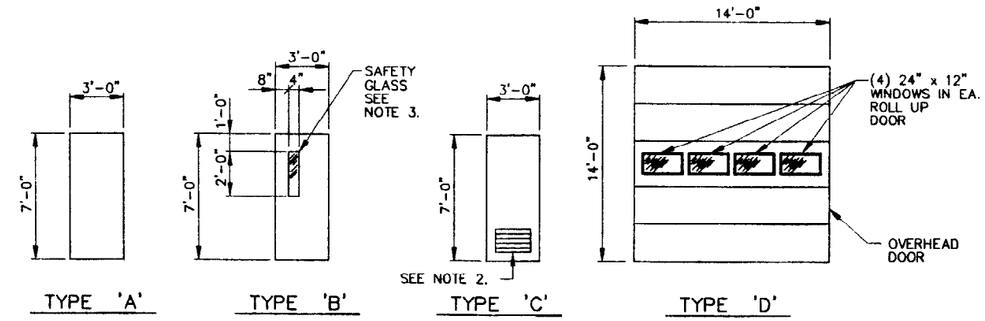

DOOR TYPES

SCALE: NONE

ROOM FINISH SCHEDULE

ROOM NO.	ROOM NAME	FLOOR: CONC. SEALED	FLOOR: CONC. W/ EPOXY	BASE: NONE	BASE: EPOXY	NORTH WALL: GYPSUM BD. T.T.F.	NORTH WALL: METAL LINER PANEL	NORTH WALL: CMU W/ EPOXY	NORTH WALL: CMU	NORTH WALL: GYP BD W/EPOXY	WEST WALL: GYPSUM BD.	WEST WALL: METAL LINER PANEL	WEST WALL: CMU W/ EPOXY	WEST WALL: CMU	WEST WALL: WATER BD W/EPOXY	WEST WALL: GYP BD W/EPOXY	SOUTH WALL: GYPSUM BD.	SOUTH WALL: METAL LINER PANEL	SOUTH WALL: CMU W/ EPOXY	SOUTH WALL: CMU	SOUTH WALL: GYP BD W/EPOXY	EAST WALL: GYPSUM BD.	EAST WALL: METAL LINER PANEL	EAST WALL: CMU W/ EPOXY	EAST WALL: CMU	EAST WALL: GYP BD W/EPOXY	CEILING: EXPOSED OPEN TO ROOF	CEILING: SUSP. GYPSUM BD. T.T.F.	CEILING: SUSP. WATERBOARD T.T.F. W/EPOXY	CEILING: SUSP. ACOUSTICAL TILE	CEILING: CONCRETE H.C. SLAB	CEILING: METAL LINER PANEL	ROOM NO.	REMARKS
101	ELECTRICAL ROOM	●		●					●		●						●								●						●		101	
102	FIRE RISER ROOM	●		●					●					●			●								●						●		102	
103	WOMEN'S SHOWER/LOCKER		●		●			●							●				●					●					●				103	
104	WOMEN'S TOILET ROOM		●		●			●					●						●					●					●				104	
105	HALL		●		●			●						●		●			●							●				●			105	
106	JANITOR ROOM		●		●			●					●						●					●					●				106	
107	MEN'S T.R.		●		●			●					●						●					●					●				107	
108	MEN'S SHOWER/LOCKER		●		●			●							●				●					●					●				108	
109	HALL		●		●			●								●			●							●				●			109	
110	RADCON ROOM		●		●					●	●					●			●					●				●					110	
111	PPE CHANGE ROOM		●		●					●			●							●						●		●					111	
112	TREATMENT AREA		●		●		●					●						●					●									●	112	
113	DECON BAY		●		●		●					●						●					●				●						113	
114	WOMEN'S T.R. VESTIBULE		●		●			●					●								●			●							●		114	PAINT CEILING (CONCRETE H.C. SLAB)
115	MEN'S T.R. VESTIBULE		●		●			●					●						●					●					●				115	

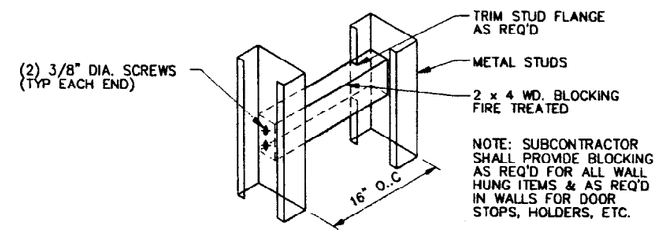

TYPICAL BLOCKING DETAIL

SCALE: NONE

NOTES

1. ALL DOOR DETAILS UNLESS OTHERWISE NOTED ARE ON SH A-8.
2. LOUVERS ARE REQUIRED IN DOORS 5,6 & 7. SIZES ARE TO BE 20" x 14" (TYP)
3. NO GLASS IS REQUIRED IN DOOR 3,4,5,6 & 7.
4. FOR DOOR HARDWARE GROUPS SEE SPECIFICATIONS.
5. OPENINGS – VERIFY LOCATION AND SIZES OF ALL EXTERIOR OPENINGS PRIOR TO CUTTING PANELS.
6. APPLY CONTINUOUS BEAD OF SEALANT AT ALL FRAME/STRUCTURE JOINTS BOTH SIDES, TYP AT ALL OPENINGS.

PROFESSIONAL ENGINEER - LAND SURVEYOR REGISTERED 2104 8-07-02 STATE OF IDAHO CLINTON O. KINGSFORD

FOR DRAWING INDEX SEE DRAWING NO 520003	SUBCONTRACT NO.	INEEL BECHTEL BWXT IDAHO, LLC
NO SCALE	REQUESTER: S.A. DAVIES DESIGN: D. NISHIOKA DRAWN: J.A. LAWRENCE PROJECT NO. 020996 SPEC CODE	INTEC STAGING, STORAGE, SIZING AND TREATMENT FACILITY DOOR AND ROOM FINISH SCHEDULES
DESIGN PHASE: AFC	FOR REVIEW/APPROVAL SIGNATURES SEE DAR NO. 88704	SIZE D · CAGE CODE 01MF3 · WORK CODE NUMBER AREA 200 TYPE 1688 SF 00 DISC 090 · DWG-520041 · REV
SAFETY CATEGORY: LSC	EFFECTIVE DATE: 8/14/2002	SCALE: NONE · SHEET A-7

File: 520041.dwg
Path: G:\Labs\SSSTF
Drawn in Model Space
Date: 01/29/02 – 6:10 P.M.
ID: MBC

REV	DESCRIPTION	EFFECTIVE DATE
	REVISIONS	

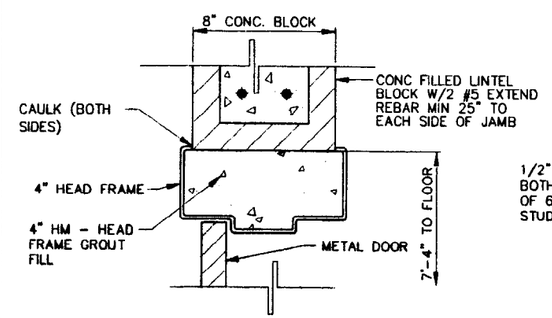

HEAD 1 A-7

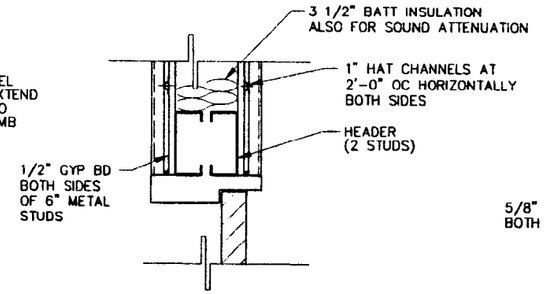

HEAD 5 A-7

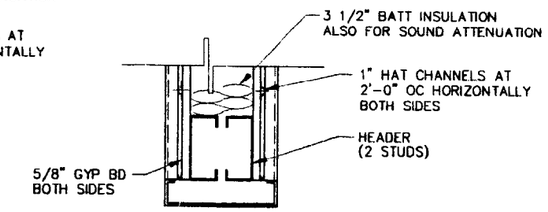

HEAD 9 A-7

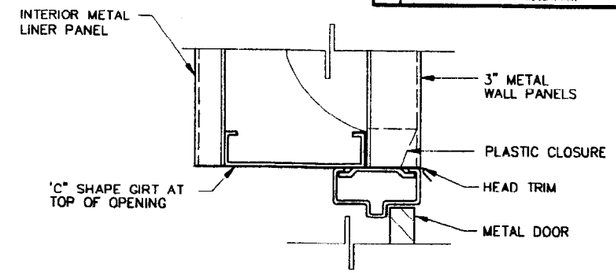

HEAD 11 A-7

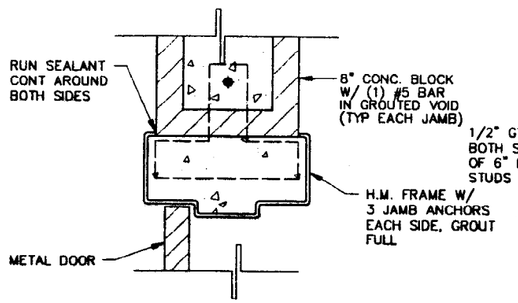

JAMB 2 A-7

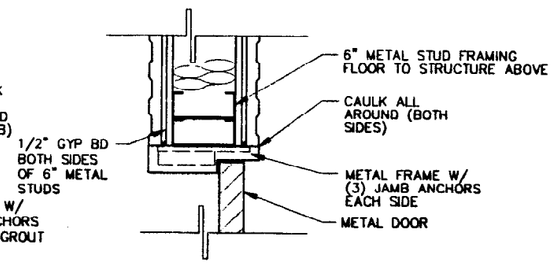

JAMB 6 A-7

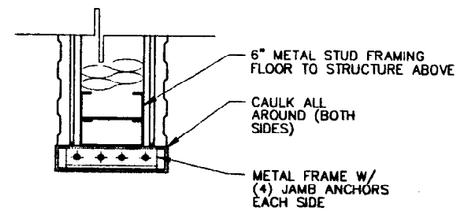

JAMB 10 A-7

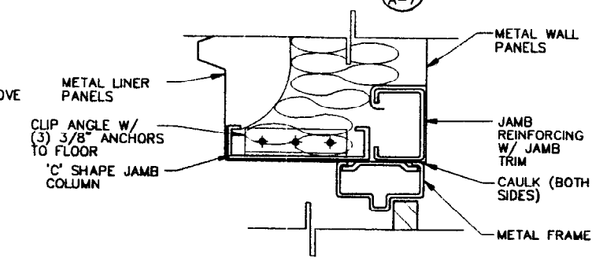

JAMB 12 A-7

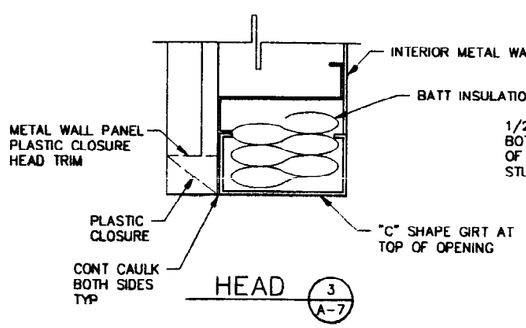

HEAD 3 A-7

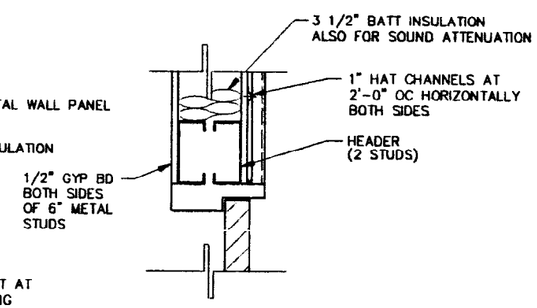

HEAD 7 A-7

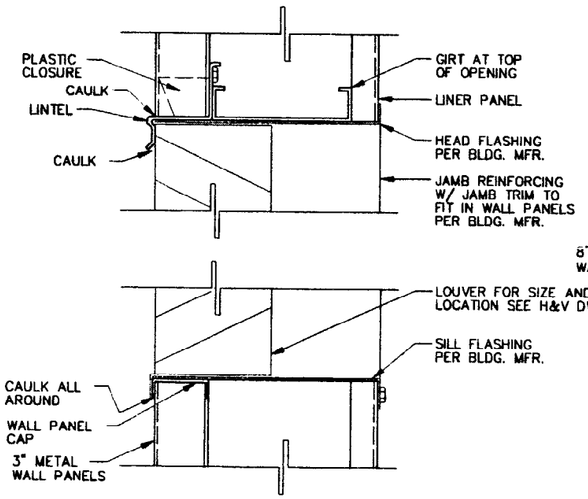

LOUVER FRAME 14 A-2

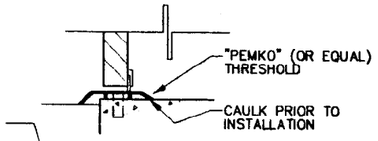

THRESH 13 A-7

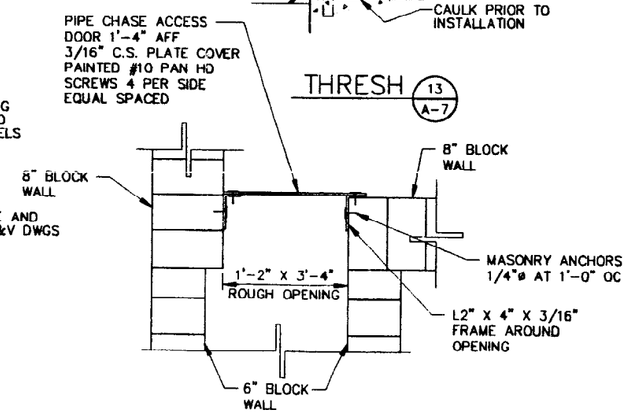

DETAIL 15 A-9

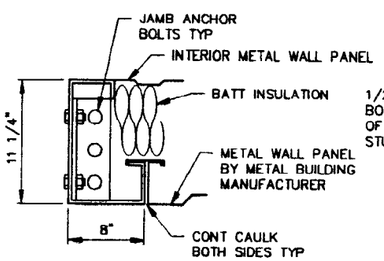

JAMB 4 A-7

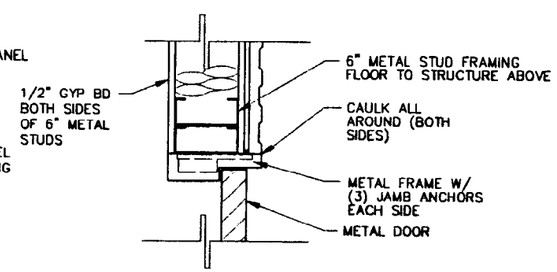

JAMB 8 A-7

PROFESSIONAL ENGINEER - LAW OFFICE OF REGISTERED 21104 STATE OF IDAHO 9-01-02 CLINTON D. KINGSFORD

FOR DRAWING INDEX SEE DRAWING NO. 520003	SUBCONTRACT NO.	INEEL
NO SCALE	REQUESTER: S.A. DAVIES DESIGN: D. NISHIOKA DRAWN: J.A. LAWRENCE PROJECT NO. 020996 SPEC CODE	INTEC STAGING, STORAGE, SIZING AND TREATMENT FACILITY DOOR, WINDOW AND LOUVER DETAILS
DESIGN PHASE: AFC	FOR REVIEW/APPROVAL SIGNATURES SEE DAR NO. 88704	SIZE D · CAGE CODE 01MF3 · INDEX CODE NUMBER AREA 200 TYPE 1688 Q 00 ORIG 090 · DWG- 520042 · REV
SAFETY CATEGORY: LSC	EFFECTIVE DATE: 3/11/2002	SCALE: NONE · SHEET A-8

File: 520042.dwg Path: C:\kbr\SSSTF
Drawn in Model Space Date: 01/29/02 - 6:12 P.M. ID: MBC

REVISIONS		
REV	DESCRIPTION	EFFECTIVE DATE:

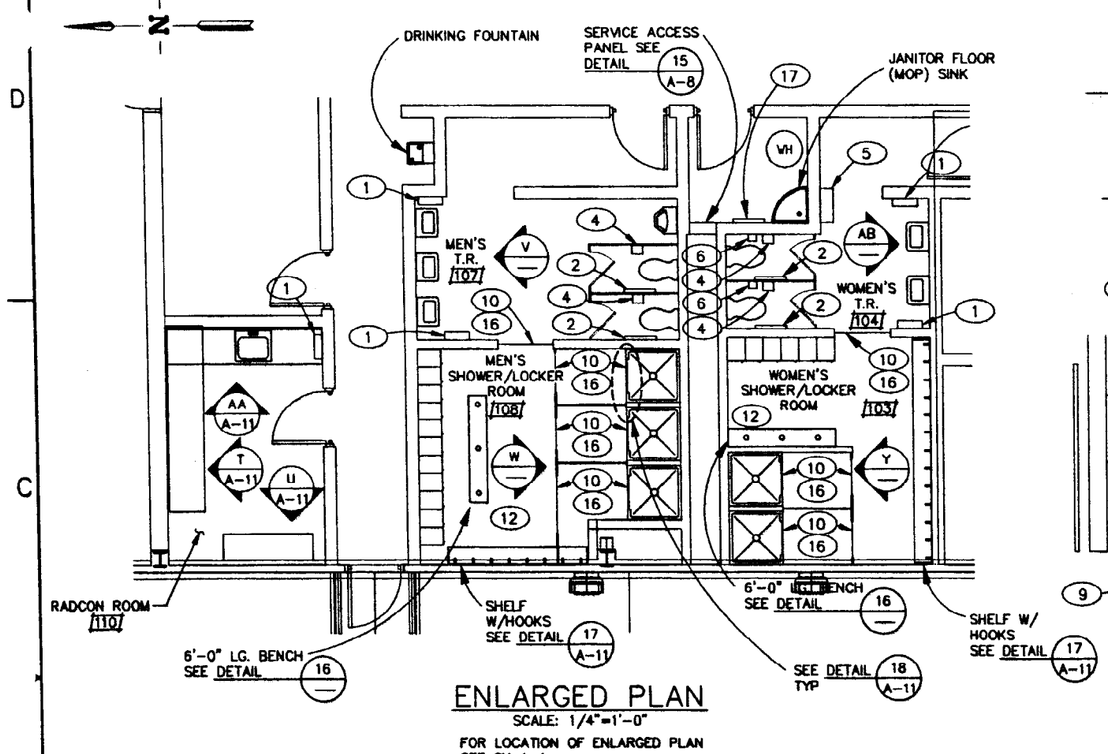

ENLARGED PLAN
SCALE: 1/4"=1'-0"
FOR LOCATION OF ENLARGED PLAN SEE SH A-1

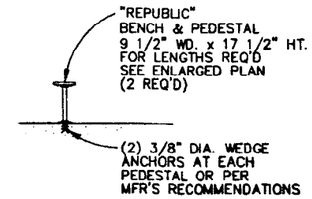

DETAIL 16
NTS
2 PLACES

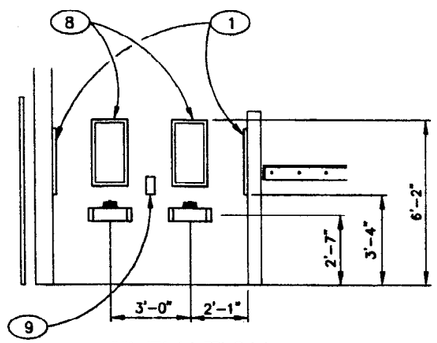

ELEVATION AB
SCALE: 3/8"=1'-0"

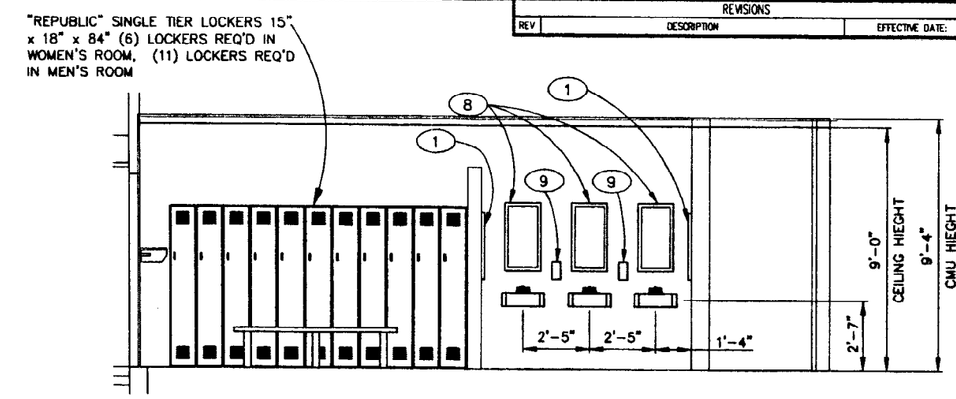

ELEVATION V
SCALE: 3/8"=1'-0"

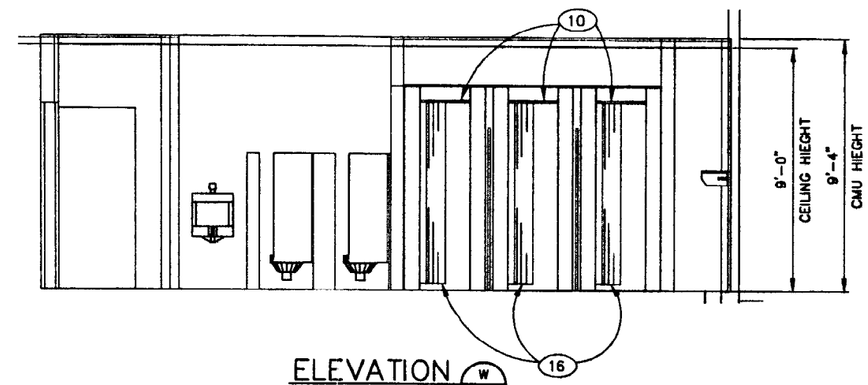

ELEVATION W
SCALE: 3/8"=1'-0"

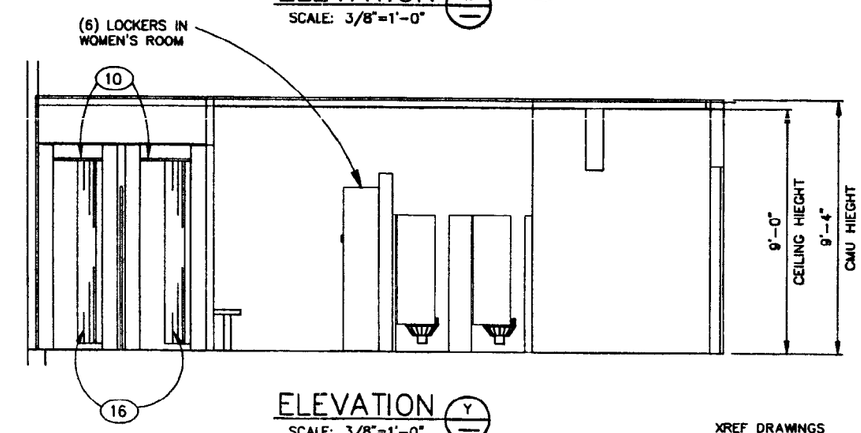

ELEVATION Y
SCALE: 3/8"=1'-0"

XREF DRAWINGS
520112.dwg

TOILET ACCESSORIES SCHEDULE

ITEM	DESCRIPTION	MFR. (OR EQUAL)	MODEL NUMBER	MOUNTING	FINISH	SIZE	REMARKS
1	PAPER TOWEL	BOBRICK	B-262	SURFACE	STAINLESS	10 3/4" X 14 3/4"	
2	TOILET SEAT COVER DISPENSER	BOBRICK	B-221	SURFACE	STAINLESS	15 3/4" X 11"	
3	TOILET PARTITION	SEE SPECS					
4	TOILET PAPER DISPENSER	BOBRICK	B-288	SURFACE	STAINLESS	5 7/8" X 10 9/16"	COLOR BY ARCH.
5	SANITARY NAPKIN DISPENSER	BOBRICK	B-35069	SURFACE	STAINLESS	16 5/8" X 12 5/8" X 5 1/8"	
6	SANITARY NAPKIN DISPOSAL	BOBRICK	B-270	SURFACE	STAINLESS	7 7/8" X 11"	
7	WASTE RECEPTACLE	BOBRICK	B-2250	FREE STANDING	STAINLESS	13 GAL.	
8	MIRROR W/SHELF UNIT	BOBRICK	B-2928	SURFACE	STAINLESS	18" X 30"	TEMP GLASS
9	LIQUID SOAP DISPENSER	BOBRICK	B-2111	CONCEALED PL SURFACE MTD	STAINLESS	4 3/4" X 8 1/8"	
10	CURTAIN ROD	BOBRICK	B-207X36	CONCEALED MOUNTING BRACKETS	STAINLESS	36"	(1) 60" ROD IN MEN'S SHOWER
11	LOCKERS	SEE SPECS					
12	BENCHES	BOBRICK	B-2111	CONCEALED PL SURFACE MOUNTED	STAINLESS	4 3/4" X 8 1/8"	
13	HOOKS	BOBRICK	B-212				SEE SH A-11 IN EA DRESSING STALL
14	SHOWER STALLS	SEE SPECS - PREMOLDED INSERT ACRYLIC AQUA GLASS - 313637A CENTER DRAIN					
15	DRESSING PARITIONS	SEE SPECS					COLOR BY ARCH.
16	CURTAINS	ANTI-BACTERIAL, WATER, STEAM AND MILDEN RESISTANT MATERIAL					
17	MOP BROOM HOLDER	BOBRICK	B-223 X 36	SURFACE	STAINLESS	36" X 10 1/2"	

FOR DRAWING INDEX SEE DRAWING NO. 520003	SUBCONTRACT NO.
SCALE: 1/4" = 1'-0" / SCALE: 3/8" = 1'-0"	REQUESTER: S.A. DAVIES
	DESIGN: D. NISHIOKA
	DRAWN: J.A. LAWRENCE
	PROJECT NO. 020996
	SPEC CODE
DESIGN PHASE: AFC	FOR REVIEW/APPROVAL SIGNATURES SEE DWR NO. 88704
SAFETY CATEGORY: LSC	EFFECTIVE DATE: 9/11/2002

INEEL
BECHTEL BWXT IDAHO, LLC

INTEC
STAGING, STORAGE, SIZING AND TREATMENT FACILITY

ENLARGED PLAN - RESTROOM AND ELEVATIONS

SIZE	CAGE CODE	PROJECT CODE NUMBER AREA	TYPE	CA	DISC	DWG-520043	REV
D	01MF3	200	1688	00	090		

SCALE: NOTED — SHEET A-9

Layout Name: 520043 Date: 01/28/02 - 6:16 P.M. ID: MBC
File: 520043.dwg Path: G:\dbr\SSSTF

REVISIONS		
REV	DESCRIPTION	EFFECTIVE DATE:

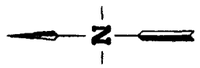

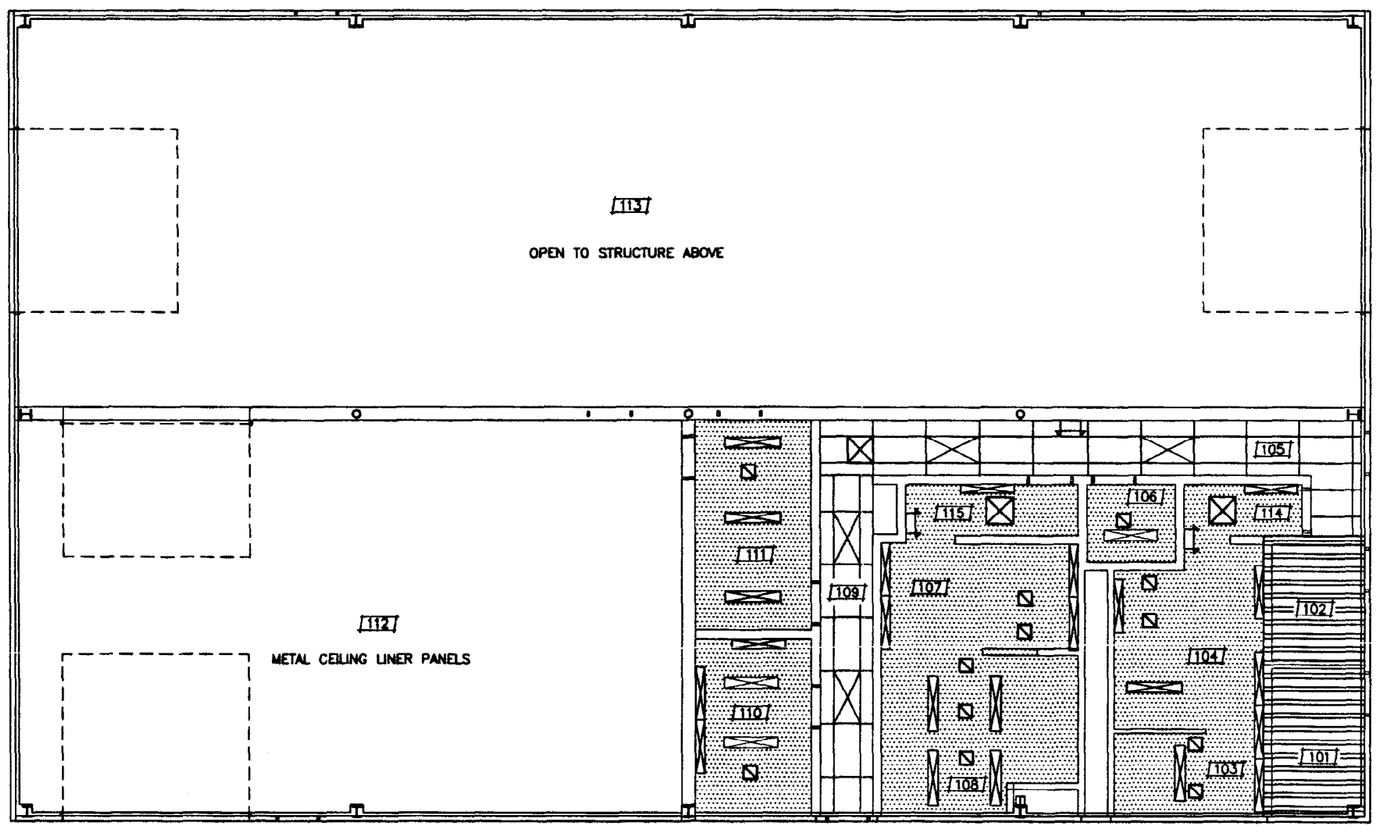

LEGEND

- 2x2 SUSPENDED GYP OR WATER BOARD CEILING
- 2x4 SUSPENDED ACOUSTICAL PANEL CEILING
- RETURN AIR/EXHAUST AIR GRILLE
- SUPPLY AIR DIFFUSER
- HOLLOW CORE
- LIGHTS

NOTES

1. SOUND BATT OVER CEILINGS IN ROOM 103, 104, 114, 107, 108 AND 115.

XREF DRAWINGS
520112.dwg

REFLECTED CEILING PLAN

REGISTERED PROFESSIONAL ENGINEER - LAS VEGAS
STATE OF NEVADA
2104
CLINTON O. KINGSFORD
8-01-02

FOR DRAWING INDEX SEE DRAWING NO. 520003	SUBCONTRACT NO.	INEEL BECHTEL BWXT IDAHO, LLC
SCALE: 3/16" = 1'-0"	REQUESTER: S.A. DAVIES	INTEC STAGING, STORAGE, SIZING AND TREATMENT FACILITY
	DESIGN: D NISHIOKA	
	DRAWN: J.A. LAWRENCE	REFLECTED CEILING PLAN
	PROJECT NO. 020996	
	SPEC CODE	
DESIGN PHASE: AFC	FOR REVIEW/APPROVAL SIGNATURES SEE DAR NO. 88704	SIZE D · CAGE CODE 01MF3 · WBS CODE NUMBER AREA 200 TYPE 1688 Q 00 ORG 090 · DWG- 520044 · REV
SAFETY CATEGORY: LSC	EFFECTIVE DATE: 3/11/2002	SCALE: 3/16" = 1'-0" · SHEET A-10

File: 520044.dwg
Path: G:\Abr\SSSTF
Layout Name: 520044
Date: 01/29/02 - 6:33 P.M.

REVISIONS		
REV	DESCRIPTION	EFFECTIVE DATE:

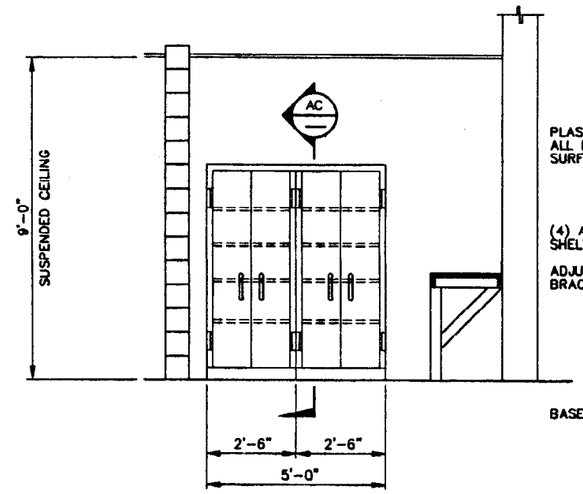

CABINET ELEVATION (U / A-9)
SCALE: 1/2"=1'-0"

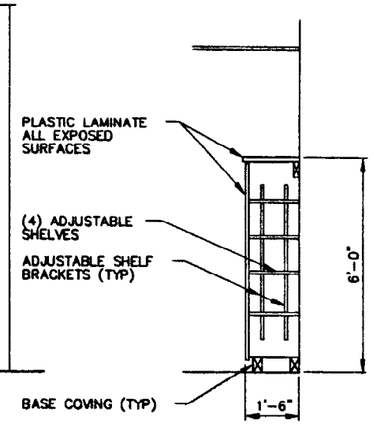

SECTION (AC / —)
SCALE: 1/2"=1'-0"

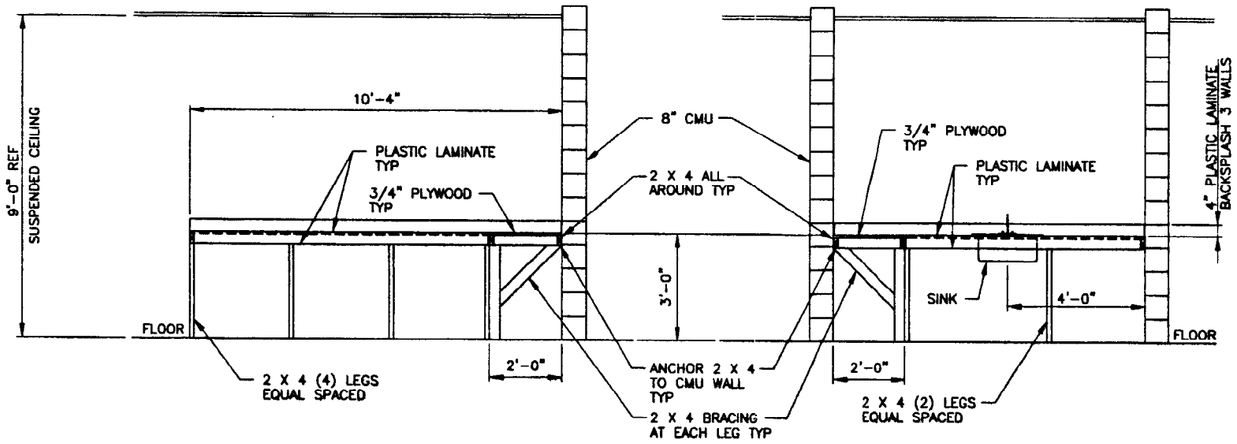

COUNTERTOP ELEVATION (T / A-9)
SCALE: 1/2"=1'-0"

COUNTERTOP ELEVATION (AA / A-9)
SCALE: 1/2"=1'-0"

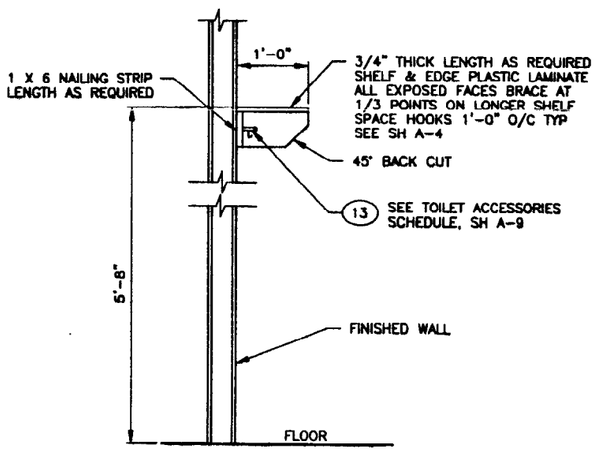

DETAIL (17 / A-9)
SCALE: 1"=1'-0"
2 PLACES

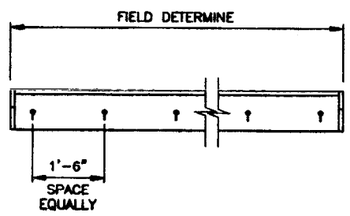

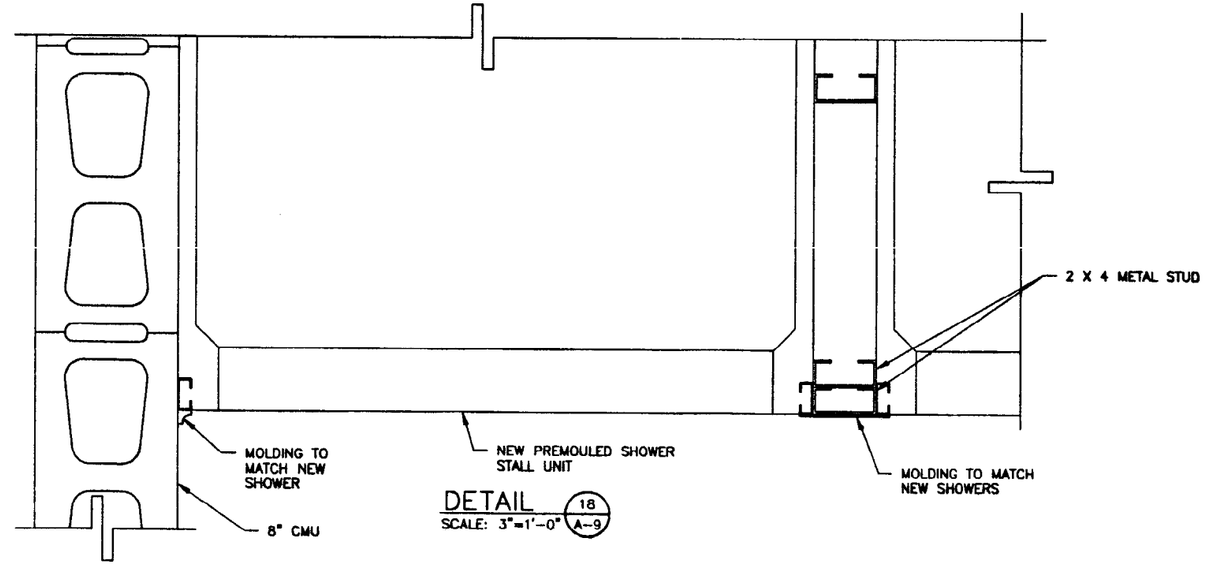

DETAIL (18 / A-9)
SCALE: 3"=1'-0"

REGISTERED PROFESSIONAL ENGINEER · LAND SURVEYOR · STATE OF IDAHO · 2104 · 01-07 · CLINTON O. KINGSFORD

FOR DRAWING INDEX SEE DRAWING NO. 520003	SUBCONTRACT NO.	INEEL — BECHTEL BWXT IDAHO, LLC
SCALE: 1/2" = 1'-0"	REQUESTOR: S.A. DAVIES	INTEC STAGING, STORAGE, SIZING AND TREATMENT FACILITY
	DESIGN: D. NISHIOKA	
	DRAWN: J. MONCUR	ELEVATIONS, DETAILS AND SECTION
	PROJECT NO. 020996	
SCALE: 1" = 1'-0"	SPEC CODE	
DESIGN PHASE: AFC	FOR REVIEW/APPROVAL SIGNATURES SEE DAR NO. 88704	SIZE D · CAGE CODE 01MF3 · INDEX CODE NUMBER AREA 200 TYPE 1688 CL 00 ORIG 090 · DWG-520045 · REV
SAFETY CATEGORY: LSC	EFFECTIVE DATE: 3/12/02	SCALE: NOTED · SHEET A-11

File: 520045.dwg
Path: G:\cbr\SSSTF
Layout Name: 520045
Date: 01/29/02 - 6:35 P.M.
ID: MBC