Appendix C

Conceptual Design Drawings

REVISIONS		
REV #	DESCRIPTION	EFFECTIVE DATE

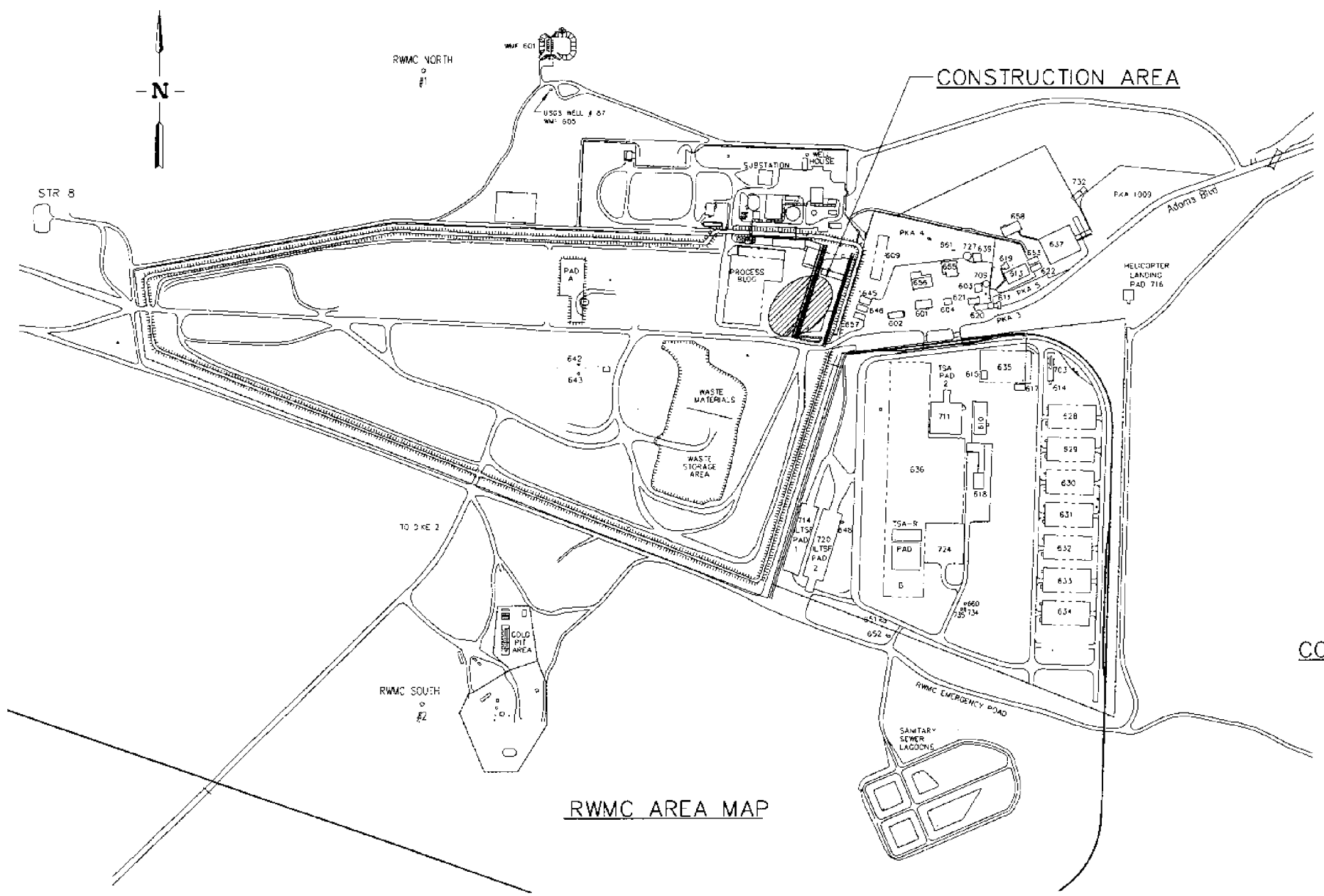

RWMC AREA MAP

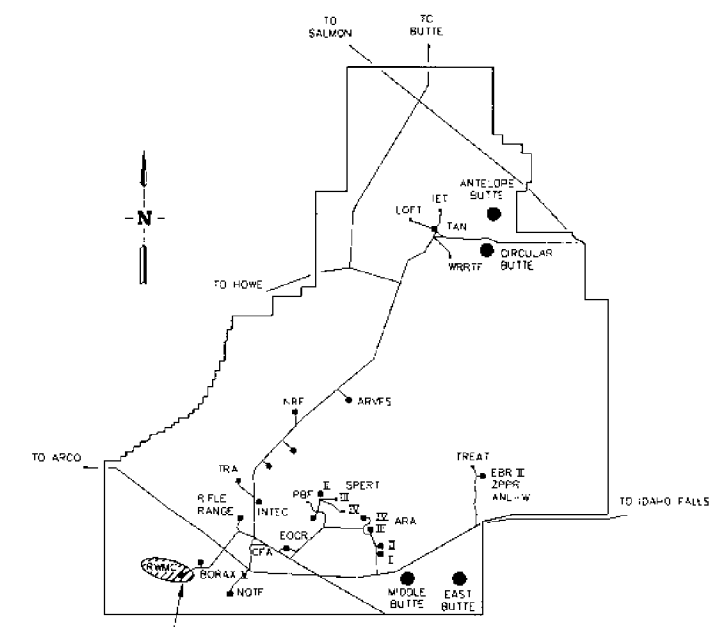

SITE MAP
SCALE: NONE

RELEASED
FOR RECORD ONLY
DO NOT FABRICATE

COORDINATE TABLE			
DATUM:	HORIZONTAL: SITE SPECIFIC VERTICAL: NGVD29		
NO.	NORTHING	EASTING	ELEVATION
1	670,726.09	266,233.27	5057.56
2	667,554.98	266,233.28	5020.82

FOR DRAWING INDEX SEE DRAWING NO 519620	SUBCONTRACT NO	INEEL
	REQUESTER SA DAVIES	OU 7-10 GLOVEBOX EXCAVATOR METHOD PROJECT
	DESIGN DN NISHIOKA	
300 200 100 0 300 SCALE 1" = 300.0'	DRAWN CA BEHM	
	PROJECT NO. 021052	SITE MAP, AREA MAP
	SPEC CODE	
DESIGN PHASE: CONCEPTUAL	FOR REVIEW/APPROVAL SIGNATURES SEE DAR NO 87799	SIZE D · CADE CODE · INDEX CODE NUMBER AREA 096 TYPE 0100 CL 01 SHEET 090 · DWG- 519619 · REV A
SAFETY CATEGORY: SEE GENERAL NOTES	EFFECTIVE DATE:	SCALE: 1" = 300.0' · SHEET T-1

File: 519619-A.dwg ID: ABE Layout: None: Layout1
Path: F:\PIPS\CEM_2002 Date: 12/11/01 - 2:08 P.M.

REVISIONS		
REV	DESCRIPTION	EFFECTIVE DATE
B	SEE DAR # -	

DRAWING INDEX

PAGE NO.	DWG NO.	A-E SH NO.	REV	DRAWING TITLE
				TITLE SHEETS
1	519619	T-1	A	SITE MAP, AREA MAP
2	519620	T-2	B	DRAWING INDEX
3	519621	T-3	A	GENERAL NOTES, ACRONYMS AND SYMBOL LEGEND
4	519622	T-4	A	ABBREVIATIONS
5	519623	T-5	B	FACILITY PROCESS FLOW DIAGRAM
6	519624	T-6	B	RCS PROCESS FLOW DIAGRAM
7	519625	T-7	B	PGS PROCESS FLOW DIAGRAM
8	519626	T-8	A	ISOMETRIC VIEW LOOKING SOUTH
9	519627	T-9	A	ISOMETRIC VIEW LOOKING NORTH
				CIVIL
10	519628	C-1	A	SITE PLAN
11	519629	C-2	B	IMPROVED ENLARGED SITE PLAN
12	519630	C-3	A	CIVIL SECTIONS
				ARCHITECTURAL
13	519631	A-1	B	FACILITY PLAN
14	519632	A-2	A	ELEVATIONS
15	519633	A-3	A	BUILDING SECTION
16	519634	A-4	A	BUILDING SECTION
17	519635	A-5	A	BUILDING SECTION
18	519636	A-6	A	"RCS" INTERIOR ELEVATIONS
19	519637	A-7	B	EQUIPMENT PLAN AND ENLARGED PLAN
20	519638	A-8	A	EXCAVATOR PLAN AND SECTIONS
21	519639	A-9	A	SAMPLING PLAN AND SECTIONS
				STRUCTURAL
22	519640	S-1	B	FLOOR FRAMING PLAN
23	519641	S-2	A	EXCAVATOR SEAL ELEVATION, SECTION AND DETAILS
24	519642	S-3	A	PGS MAIN FRAME PLAN AND ELEVATIONS
25	519643	S-4	A	PGS MAIN FRAME ASSEMBLY ISOMETRIC AND VIEWS
26	519644	S-5	A	CART RAMP PLAN AND ELEVATIONS
27	519645	S-6	A	PGS PLAN VIEW AND ELEVATION
28	519646	S-7	A	PGS SECTION AND ISOMETRIC VIEWS
29	519647	S-8	A	CART SYSTEM PLAN AND ELEVATION
				PIPING
30	519648	P-1	A	DUST SUPPRESSION DIAGRAM
31	519649	P-2	A	DUST SUPPRESSION SYSTEM ISOMETRIC

DRAWING INDEX (CONTINUED)

PAGE NO.	DWG NO.	A-E SH NO.	REV	DRAWING TITLE
				FIRE PROTECTION
32	519650	FP-1	A	FIRE SUPPRESSION SYSTEMS PLOT PLAN
33	519651	FP-2	A	FIRE RISER BUILDING FLOOR PLAN AND SECTION
34	519652	FP-3	A	FACILITY ISOMETRIC
35	519653	FP-4	A	WES ISOMETRIC
36	519654	FP-5	A	RCS ISOMETRIC
37	519655	FP-6	A	PGS ISOMETRIC
				HVAC
38	519656	HV-1	A	FLOW AND INSTRUMENTATION DIAGRAM
39	519657	HV-2	A	HVAC EQUIPMENT/AIRFLOW PATTERN PLAN
40	519658	HV-3	A	EQUIPMENT SCHEDULE
				ELECTRICAL
41	519659	E-1	A	ONELINE DIAGRAM
42	519660	E-2	A	POWER PLOT PLAN
43	519661	E-3	A	POWER DISTRIBUTION CENTER LAYOUT
				INSTRUMENTATION
44	519662	IN-1	A	FISSILE MATERIAL MONITORING BLOCK DIAGRAM
45	519663	IN-2	A	PLC BLOCK DIAGRAM
46	519664	IN-3	A	VIDEO MONITORING SYSTEM BLOCK DIAGRAM
47	519665	IN-4	A	CRITICALITY ALARM SYSTEM BLOCK DIAGRAM
48	519666	IN-5	A	GEM RADIOLOGICAL MONITORING BLOCK DIAGRAM
				LIFE SAFETY
49	519668	LSS-1	A	FIRE ALARM SYSTEM RISER DIAGRAM
50	519668	LSS-2	A	PLOT PLAN AND FIRE RISER BUILDING PLAN
51	519669	LSS-3	B	EQUIPMENT PLAN
				X-REFERENCE DRAWINGS -- NOT IN PACKAGE
52	519674	-	A	PACKAGING GLOVEBOX SYSTEM XREF
53	519675	-	A	FIRE PROTECTION XREF
54	519676	-	A	DUST SUPPRESSION XREF
55	519677	-	A	BUILDING XREF
56	519678	-	A	SITE LAYOUT XREF

RELEASED
FOR RECORD ONLY
DO NOT FABRICATE

FOR DRAWING INDEX SEE DRAWING NO 519620	SUBCONTRACT NO	INEEL
NO SCALE	REQUESTER SA DAVIES DESIGN DN NISHIOKA DRAWN CA BEHM PROJECT NO 021052 SPEC CODE	OU 7-10 GLOVEBOX EXCAVATOR METHOD PROJECT DRAWING INDEX
DESIGN PHASE CONCEPTUAL	FOR REVIEW/APPROVAL SIGNATURES SEE DAR NO. 87799	SIZE D; CAGE CODE; INDEX CODE NUMBER AREA 098 TYPE 10100 CL 01 SEQ 090; DWG-519620; REV B
SAFETY CATEGORY SEE GENERAL NOTES	EFFECTIVE DATE	SCALE NONE; SHEET T-2

File: 519620-B.dwg ID: ABE
Path: P:\INEEL-EXT-01\01512-RE Layout Name: Layout1
Plotted: 01/10/02 - 08:49 A.M.

SYMBOL LEGEND

PROCESS FLOW DIAGRAM

- PROCESS STREAM
- POTENTIAL PROCESS STREAM
- CONFINEMENT BOUNDARY
- DRUM
- WASTE TRANSFER TRAY
- TRAY
- FILTER
- PROCESS STREAM IDENTIFICATION TAG
- REMOTE EXCAVATOR
- HOPPER
- 4'x4'x4' SOIL SACKS

FIRE PROTECTION

- CHECK VALVE
- FIRE DEPARTMENT CONNECTION
- RISER
- GROOVED FITTINGS

VENTILATION

- ELECTRICAL LEAD
- PNEUMATIC SIGNAL
- FOGGER ASSEMBLY WITH 4 NOZZLES
- PUMP
- FAN
- LOCALLY MOUNTED INSTRUMENT
- HEPA FILTER
- PRE-FILTER
- DEMISTER
- MANUAL DAMPER
- BACKDRAFT DAMPER
- GRILLE
- RADIANT HEATER

GENERAL SYMBOLS

- OR ---- EXISTING
- NEW AND/OR EXPOSED CONDUIT
- CONCEALED CONDUIT BELOW FLOOR OR GRADE

LIFE SAFETY SYSTEMS

- MANUAL FIRE ALARM STATION
- SPEAKER/STROBE
- SPEAKER
- SUPERVISORY CHIME
- BELL
- DCP DELUGE CONTROL PANEL
- LA LOW AIR ALARM
- LT LOW TEMP ALARM
- TS TAMPER SWITCH
- W WATER FLOW ALARM
- UV ULTRAVIOLET

ACRONYMS

ACRONYM	NAME
AMWTF	ADVANCED MIXED WASTE TREATMENT FACILITY
FFS	FACILITY FLOOR STRUCTURE
FSI PACKAGE	FACILITY AND SYSTEM INTEGRATION PACKAGE
ICDF	IDAHO CERCLA DISPOSAL FACILITY
PGS	PACKAGING GLOVEBOX SYSTEM
RCS	RETRIEVAL CONFINEMENT STRUCTURE
WES	WEATHER ENCLOSURE STRUCTURE

INSTRUMENTATION

- X LIGHT "X" INDICATES COLOR

GENERAL NOTES

1. SEE RWMC CONFIGURATION MANAGEMENT DATABASE FOR SAFETY CATEGORY DESIGNATION.

RELEASED FOR RECORD ONLY
DO NOT FABRICATE

FOR DRAWING INDEX SEE DRAWING NO. 519520	SUBCONTRACT NO.	INEEL
NO SCALE	REQUESTER: SA DAVIES DESIGN: S WALSH DRAWN: TB UMPHLETTE PROJECT NO. 021052 SPEC CODE	OU 7-10 GLOVEBOX EXCAVATOR METHOD PROJECT GENERAL NOTES, ACRONYMS AND SYMBOL LEGEND
DESIGN PHASE: CONCEPTUAL	FOR REVIEW/APPROVAL SIGNATURES SEE DAR NO. 87799	SIZE D · CAGE CODE 01MF3 · INDEX CODE NUMBER AREA 098 TYPE 0671 CL 01 ORG 090 · DWG-519621 · REV A
SAFETY CATEGORY: SEE GENERAL NOTES	EFFECTIVE DATE:	SCALE: NONE · SHEET T-3

File: 519621-A.dwg ID: ABE Layout Name: Layout1
Path: P:\PFD\GEM_2002\Site sheets Date: 12/14/01 - 1:51 P.M.

REVISIONS		
REV	DESCRIPTION	EFFECTIVE DATE:

ABBREVIATIONS

A	ANALYZER
ABSORB.	ABSORBANT
AR	AS REQUIRED
CFM	CUBIC FEET PER MINUTE
CONTAM	CONTAMINATED
ECM	ELECTRIC CONTROL MODULE
EXC	EXCAVATION
FE	FLOW ELEMENT
FT	FEET
FT	FEET
GAL	GALLON
GPH	GALLONS PER HOUR
HR	HOUR
KW	KILOWATT
MATL	MATERIAL
MAX	MAXIMUM
MFM	MULTI-FUNCTION MODULE
MIN	MINIMUM
ML	MILLILITER
PDAL	PRESSURE DIFFERENTIAL ALARM LOW
PDI	PRESSURE DIFFERENTIAL INDICATOR
PDI	PRESSURE DIFFERENTIAL INDICATOR TRANSMITTER
PFD	PROCESS FLOW DIAGRAM
PSI	POUND PER SQUARE INCH
SEC	SECONDARY
SH	SHEET
TAL	TEMPERATURE ALARM LOW
TBD	TO BE DETERMINED
TE	TEMPERATURE ELEMENT
TI	TEMPERATURE INDICATOR
VFD	VARIABLE FREQUENCY DRIVE

ALARA	AS LOW AS REASONABLY ACHIEVABLE
AM	AMERICIUM
AWG	AMERICAN WIRE GAUGE
BAT	BATTERY
BKR	BREAKER
C	CONDUIT
CAS	CRITICALITY ALARM SYSTEM
CAM	CONTINUOUS AIR MONITOR
CCTV	CLOSED CIRCUIT TELEVISION
CFM	CUBIC FEET PER MINUTE
CKT	CIRCUIT
CO2	CARBON DIOXIDE
COM	COMMUNICATION
CP	CONTROL PANEL
CPU	CENTRAL PROCESSING UNIT
CPRSR	COMPRESSOR
DAC	DATA ACQUISITION CENTER
DISC	DISCONNECT
DMP	DAMPER
DO	DOOR OPERATOR
DP	DISTRIBUTION PANEL
EVAC	EVACUATION
FAS	FIRE ALARM SYSTEM
FIT	FLOW INDICATOR TRANSMITTER
FMM	FISSILE MATERIAL MONITOR
FODU	FIBER OPTIC DISTRIBUTION UNIT
GEN	GENERATOR
GND	GROUND
GFE	GOVERNMENT FURNISHED EQUIPMENT
GFI, GFCI	GROUNDED FAULT CIRCUIT INTERRUPTER
HEPA	HIGH EFFICIENCY PARTICULATE AIR (FILTER)
HID	HIGH INTENSITY DISCHARGE
HNS	HORNS
HP	HORSEPOWER
HPU	HYDRAULIC POWER UNIT
HTR	HEATER
ITM	INTERIM TRANSFER MODULE
HMI	HUMAN MACHINE INTERFACE
JBX	JUNCTION BOX
KV	KILO-VOLT
KVA	KILO-VOLT AMPERES
KCMIL	THOUSAND CIRCULAR MILLS

LAP	LOW AIR PRESSURE
LP	LIGHTING PANEL
LTG	LIGHTING
MCB	MAIN CIRCUIT BREAKER
MCP	MOTOR CIRCUIT PROTECTOR
MFA	MANUAL FIRE ALARM
MM	MONITOR MODULE
OU	OPERABLE UNIT
PCM	PERSONAL CONTAMINATION MONITOR
PCRT	PROBE CORE REMOVAL TOOL
PDIT	PRESSURE DIFFERENTIAL INDICATOR TRANSMITTER
PLC	PROGRAMMABLE LOGIC CONTROLLER
PP	POWER PANEL
RAD CON	RADIOLOGICAL CONTROLS
RAM	RADIATION AREA MONITOR
RCPT	RECEPTACLE
SPK	SPEAKER
TA	TAMPER SWITCH
TBX	TERMINAL BOX
TP	TWISTED PARE
TSP	TWISTED SHIELDED PAIR
UNSW	UNSWITCHED
UPS	UNINTERRUPTABLE POWER SUPPLY
UTP	UNSHIELDED TWISTED PAIR
VAC	VOLTS ALTERNATING CURRENT
VCS	VOICE COMMUNICATION SYSTEM
VOC	VOLATILE ORGANIC COMPOUND
WFA	WATER FLOW ALARM
WP	WEATHERPROOF
XFMR	TRANSFORMER

NOTES

1. NOT ALL SYMBOLS ARE USED ON THIS PROJECT.

RELEASED
FOR RECORD ONLY
DO NOT FABRICATE

FOR DRAWING INDEX SEE DRAWING NO. 519620	SUBCONTRACT NO.	INEEL (Idaho National Engineering & Environmental Laboratory) ARCHITECT-ENGINEER, LLC
NO SCALE	REQUESTER: SA DAVIES DESIGN: JE DUGGAN DRAWN: JL CARPENTER PROJECT NO. 021052 SPEC CODE	OU 7-10 GLOVEBOX EXCAVATOR METHOD PROJECT WES / RCS / PGS ABBREVIATIONS
DESIGN PHASE: CONCEPTUAL	FOR REVIEW/APPROVAL SIGNATURES SEE DAR NO. 87799	SIZE D; CAGE CODE 01MF3; INDEX CODE NUMBER AREA 098 TYPE 9999 CL 10 ORD 090; DWG-519622; REV A
SAFETY CATEGORY: SEE GENERAL NOTES	EFFECTIVE DATE:	SCALE: NONE; SHEET T-4

File: 519622-Ldwg ID: ABE Layout Name: Layout1
Path: P:\PITP\CEM_2002\title sheets Date: 12/14/01 - 1:50 P.M.

REVISIONS		
REV	DESCRIPTION	EFFECTIVE DATE
B	SEE DAR ?????	

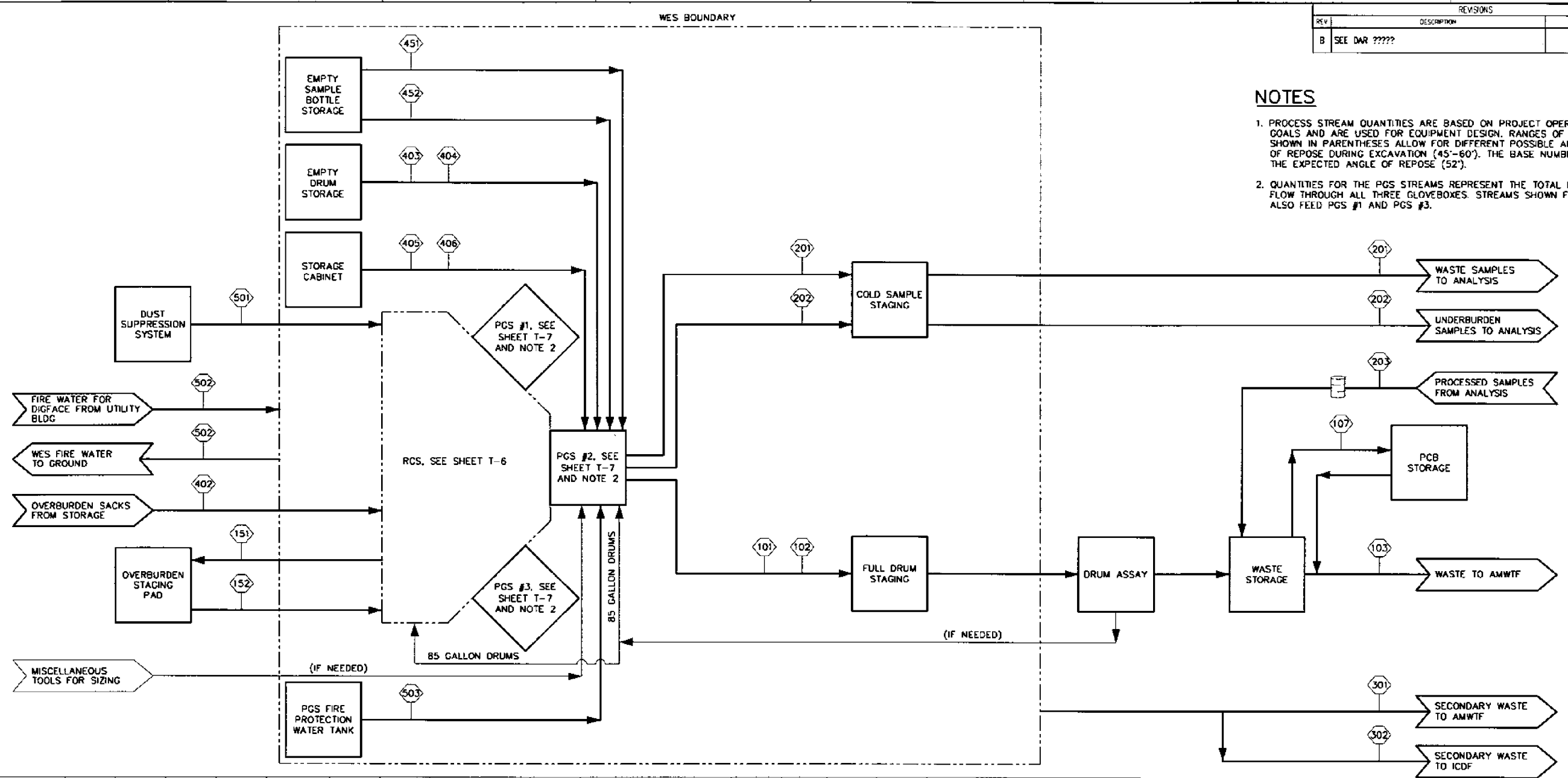

NOTES

1. PROCESS STREAM QUANTITIES ARE BASED ON PROJECT OPERATIONAL GOALS AND ARE USED FOR EQUIPMENT DESIGN. RANGES OF QUANTITIES SHOWN IN PARENTHESES ALLOW FOR DIFFERENT POSSIBLE ANGLES OF REPOSE DURING EXCAVATION (45°–60°). THE BASE NUMBER IS FOR THE EXPECTED ANGLE OF REPOSE (52°).
2. QUANTITIES FOR THE PGS STREAMS REPRESENT THE TOTAL MATERIAL FLOW THROUGH ALL THREE GLOVEBOXES. STREAMS SHOWN FOR PGS #2 ALSO FEED PGS #1 AND PGS #3.

PROCESS STREAM	101	102	103	107	151	152	201	202	203	301	302	402	403	404	405	406	451	452	501	502	503
DESCRIPTION	PIT WASTE – 55 GAL DRUM	PIT WASTE – 85 GAL DRUM	TOTAL OUTPUT WASTE	PCB CONTAM WASTE DRUM	OVERBURDEN SOIL – IN SACK INSIDE BOX	OVER-BURDEN SOIL IN SACK	SAMPLE – PIT WASTE	SAMPLE – UNDER-BURDEN	RETURNED WASTE SAMPLES	SEC WASTE – MIXED	SEC WASTE – CERCLA	OVER-BURDEN SOIL SACK	55 GAL DRUM ASSEMBLY	85 GAL DRUM ASSEMBLY	ABSORB. MATL	WASTE TARP TO LINE TRAY	EMPTY SAMPLE BOTTLE	SAMPLING SPOONS, ETC	DUST SUPPRESSION WATER	FIRE WATER FOR WES	FIRE WATER FOR PGS
CUBIC FEET / 12 HOUR SHIFT	---	---	21.2	---	45	TBD	---	---	---	TBD	TBD	---	---	---	---	---	---	---	---	---	---
DRUMS / 12 HOUR SHIFT	3.5	0.5	4	---	---	---	---	---	---	---	---	---	3.5	0.5	---	---	---	---	---	---	---
UNITS / 12 HOUR SHIFT	---	---	---	---	1.1	TBD	TBD	---	---	---	---	1.1	---	---	AR	10.5 (9–13)	TBD	AR	---	---	---
GALLONS/HOUR	---	---	---	---	---	---	---	---	---	---	---	---	---	---	---	---	---	---	8.5	TBD	---
GALLONS, MAXIMUM	---	---	---	---	---	---	---	---	---	---	---	---	---	---	---	---	---	---	500	TBD	100
CUBIC YARDS, TOTAL	---	---	79 (66–92)	---	66	66	---	---	---	TBD	TBD	---	---	---	---	---	---	---	---	---	---
DRUMS, TOTAL	353 (295–415)	51 (44–61)	---	---	---	---	---	---	---	TBD	TBD	---	353 (295–415)	51 (44–61)	---	---	---	---	---	---	---
UNITS, TOTAL	---	---	---	---	44	---	TBD	8	TBD	---	---	44	---	---	AR	848 (708–998)	TBD	AR	---	---	---

RELEASED FOR RECORD ONLY

DO NOT FABRICATE

FOR DRAWING INDEX SEE DRAWING NO 519620

NO SCALE

DESIGN PHASE: CONCEPTUAL

SAFETY CATEGORY: SEE GENERAL NOTES

SUBCONTRACT NO

REQUESTER: SA DAVIES
DESIGN: S WALSH
DRAWN: TB UMPHLETTE
PROJECT NO: 021052
SPEC CODE

FOR REVIEW/APPROVAL SIGNATURES SEE DAR NO 87799

EFFECTIVE DATE

INEEL

OU 7-10
GLOVEBOX EXCAVATOR METHOD PROJECT
WES / RCE / PGS

FACILITY PROCESS FLOW DIAGRAM

SIZE	CAGE CODE	INDEX CODE NUMBER					DWG	REV
		AREA	TYPE	CL	ORIG			
D	01MF3	098	0671	28	090		519623	B

SCALE: NONE

SHEET T-5

File: 519623-B.dwg ID: UMPHTB Layout Name: Layout1
Path: B:\ode\INEEL-EXT-01-01534-REV0.B 01/08/02 - 4:39 P.M.

REVISIONS		
REV	DESCRIPTION	EFFECTIVE DATE
B	SEE DAR ?????	

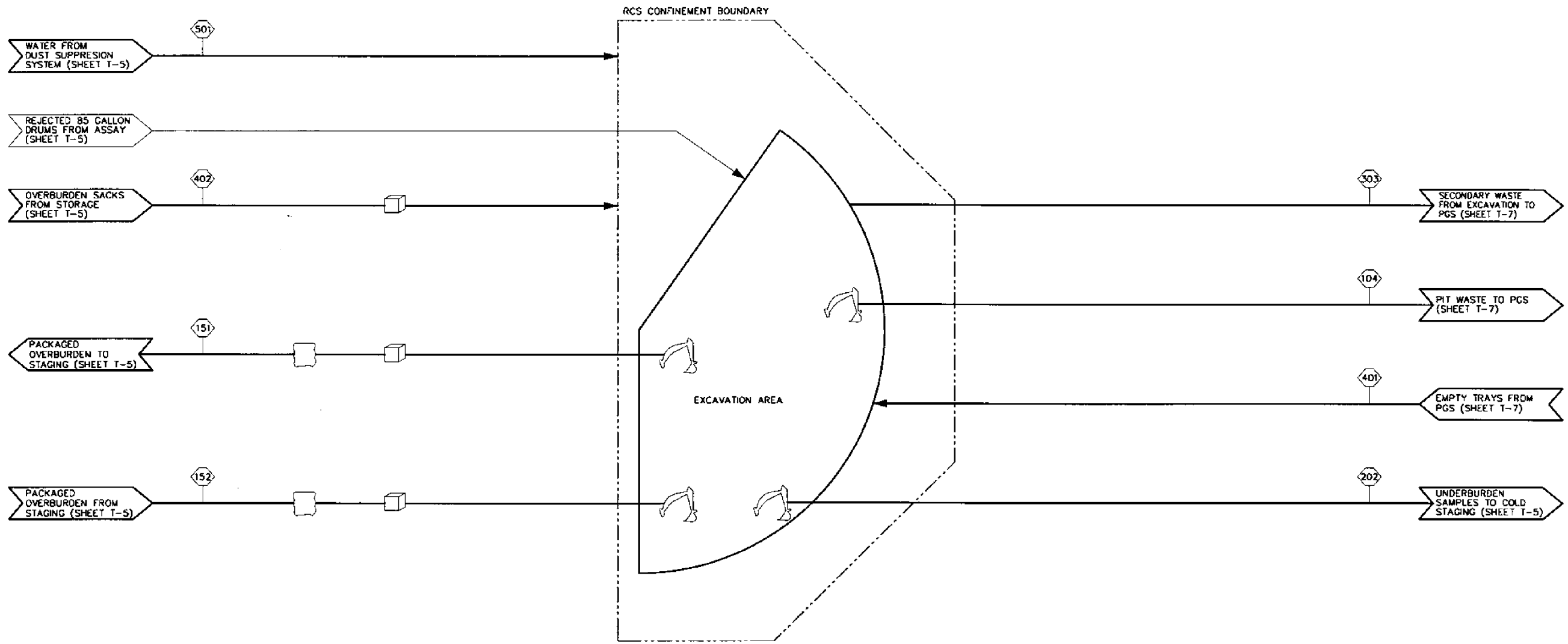

PROCESS STREAM	104	151	152	202	303	401	402	501
DESCRIPTION	TOTAL PIT WASTE	OVERBURDEN SOIL – IN SACK INSIDE BOX	OVERBURDEN SOIL IN SACK	SAMPLE – UNDER-BURDEN	SEC WASTE FROM EXC	WASTE TRANSFER TRAY	OVERBURDEN SOIL SACK	DUST SUPPRESSION WATER
CUBIC FEET / 12 HOUR SHIFT	21.2	45	TBD	---	TBD	---	---	---
DRUMS / 12 HOUR SHIFT	•	---	---	---	---	---	---	---
UNITS / 12 HOUR SHIFT	---	1.1	TBD	---	---	10.5 (9-13)	1.1	---
GALLONS/HOUR	---	---	---	---	---	---	---	8.5
GALLONS, MAXIMUM	---	---	---	---	---	---	---	500
CUBIC YARDS, TOTAL	79 (66-92)	66	66	---	TBD	---	---	---
DRUMS, TOTAL	---	---	---	---	TBD	---	---	---
UNITS, TOTAL	---	44	---	8	---	---	44	---

RELEASED FOR RECORD ONLY

DO NOT FABRICATE

FOR DRAWING INDEX SEE DRAWING NO. 519620	SUBCONTRACT NO	INEEL
NO SCALE	REQUESTER: SA DAVIES	OU 7-10 GLOVEBOX EXCAVATOR METHOD PROJECT RCS
	DESIGN: S WALSH	
	DRAWN: TB UMPHLETTE	
	PROJECT NO: 021052	RCS PROCESS FLOW DIAGRAM
	SPEC CODE	
DESIGN PHASE: CONCEPTUAL	FOR REVIEW/APPROVAL SIGNATURES SEE DAR NO 87799	SIZE D · CAGE CODE 01MF3 · INDEX CODE NUMBER AREA 098 TYPE 0671 CL 28 DPC 090 · DWG-519624 · REV B
SAFETY CATEGORY: SEE GENERAL NOTES	EFFECTIVE DATE:	SCALE: NONE · SHEET T-6

File: 519624-B.dwg ID: UMPHTB Layout Name: Layout1
Path: B:\data\INEEL-EXT-01-01512-REDAB 01/08/02 - 4:30 P.M.

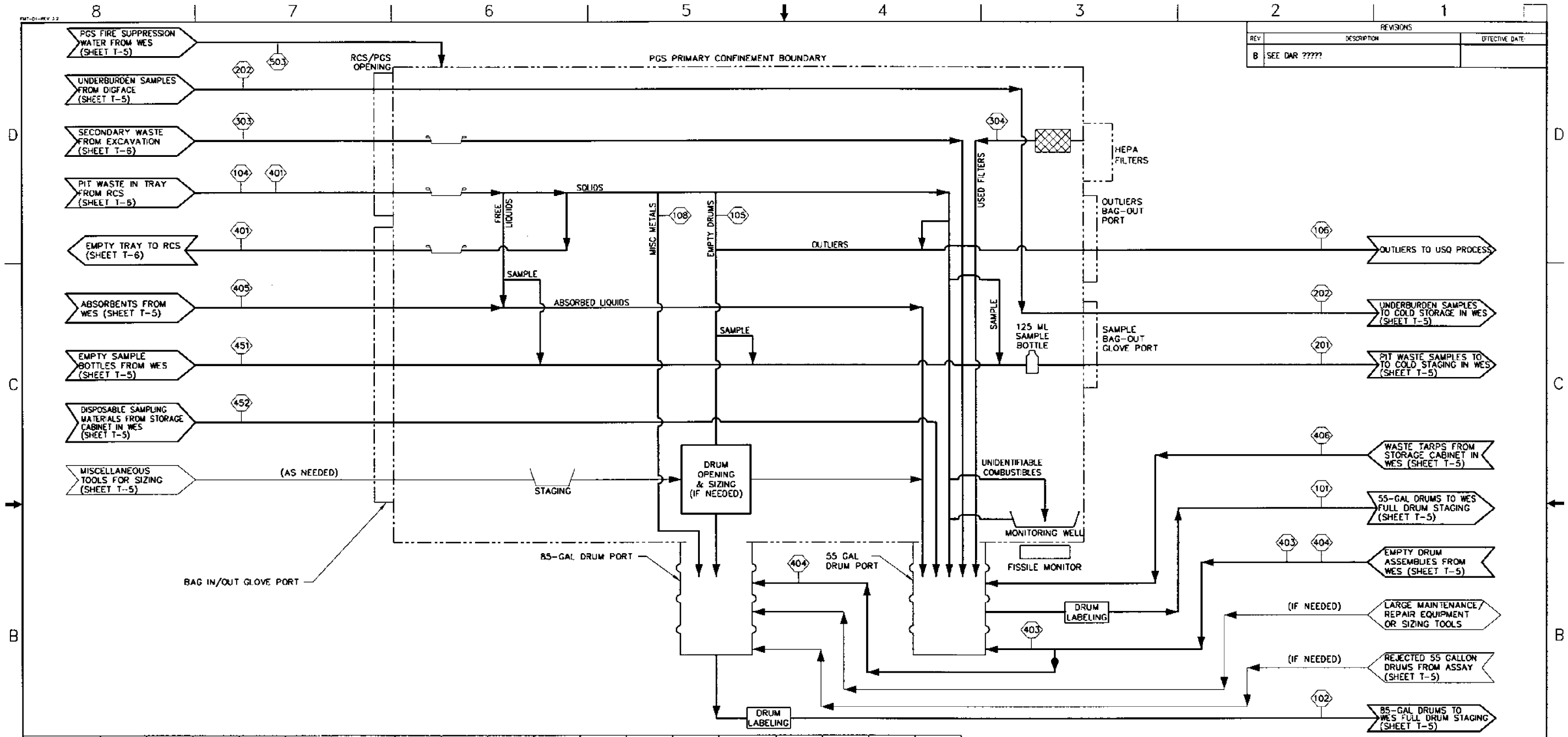

REV	DESCRIPTION	EFFECTIVE DATE
B	SEE DAR ?????	

PROCESS STREAM	101	102	104	105	106	108	201	202	303	304	401	403	404	405	406	451	452	503
DESCRIPTION	PIT WASTE – 55 GAL DRUM	PIT WASTE – 85 GAL DRUM	TOTAL PIT WASTE	EMPTY COOLANT DRUM	OUTLIER WASTE	MISC NON-COMBUSTIBLES	SAMPLE – PIT WASTE	SAMPLE – UNDER-BURDEN	SEC WASTE FROM EXC	USED HEPA FILTERS	WASTE TRANSFER TRAY	55 GAL DRUM ASSEMBLY	85 GAL DRUM ASSEMBLY	ABSORBANT MATERIALS	WASTE TARP TO LINE TRAY	EMPTY SAMPLE BOTTLE	SAMPLING SPOONS, ETC	FIRE WATER FOR PGS
CUBIC FEET / 12 HOUR SHIFT	---	---	21.2	---	---	---	---	---	TBD	TBD	---	---	---	---	---	---	---	---
DRUMS / 12 HOUR SHIFT	3.5	0.5	4	2	0.1	---	---	---	---	---	---	3.5	0.5	---	---	---	---	---
UNITS / 12 HOUR SHIFT	---	---	---	---	---	---	TBD	---	---	---	10.5 (9–13)	---	---	AR	10.5 (9–13)	TBD	AR	---
GALLONS/HOUR	---	---	---	---	---	---	---	---	---	---	---	---	---	---	---	---	---	---
GALLONS, MAXIMUM	---	---	---	---	---	---	---	---	---	---	---	---	---	---	---	---	---	100
CUBIC YARDS, TOTAL	---	---	79 (39–92)	---	---	---	---	---	TBD	TBD	---	---	---	---	---	---	---	---
DRUMS, TOTAL	353 (295–415)	51 (44–61)	---	97	12	4	---	---	TBD	---	---	353 (295–415)	51 (44–61)	---	---	---	---	---
UNITS, TOTAL	---	---	---	---	---	---	TBD	8	---	---	---	---	---	AR	848 [708–998]	TBD	AR	---

RELEASED FOR RECORD ONLY

DO NOT FABRICATE

FOR DRAWING INDEX SEE DRAWING NO. 519520

SUBCONTRACT NO.

NO SCALE

REQUESTER: SA DAVIES
DESIGN: S WALSH
DRAWN: TB UMPHLETTE
PROJECT NO: 021052
SPEC CODE:
FOR REVIEW/APPROVAL SIGNATURES
SEE DAR NO 87799
EFFECTIVE DATE:

DESIGN PHASE: CONCEPTUAL
SAFETY CATEGORY: SEE GENERAL NOTES

INEEL

OU 7-10
GLOVEBOX EXCAVATOR METHOD PROJECT
PGS

PGS PROCESS FLOW DIAGRAM

SIZE D | CAGE CODE 01MF3 | INDEX CODE NUMBER: AREA | TYPE | SQ | ORIG 098 | 0671 | 28 | 090 | DWG- 519625 | REV B

SCALE: NONE | SHEET T-7

File: 519625-B.dwg
Path: B:\out\WEE-STT-01-519-4-B0448 01/08/02 - 4:30 P.M.
Layout Name: Layout1
ID: UMPHTB

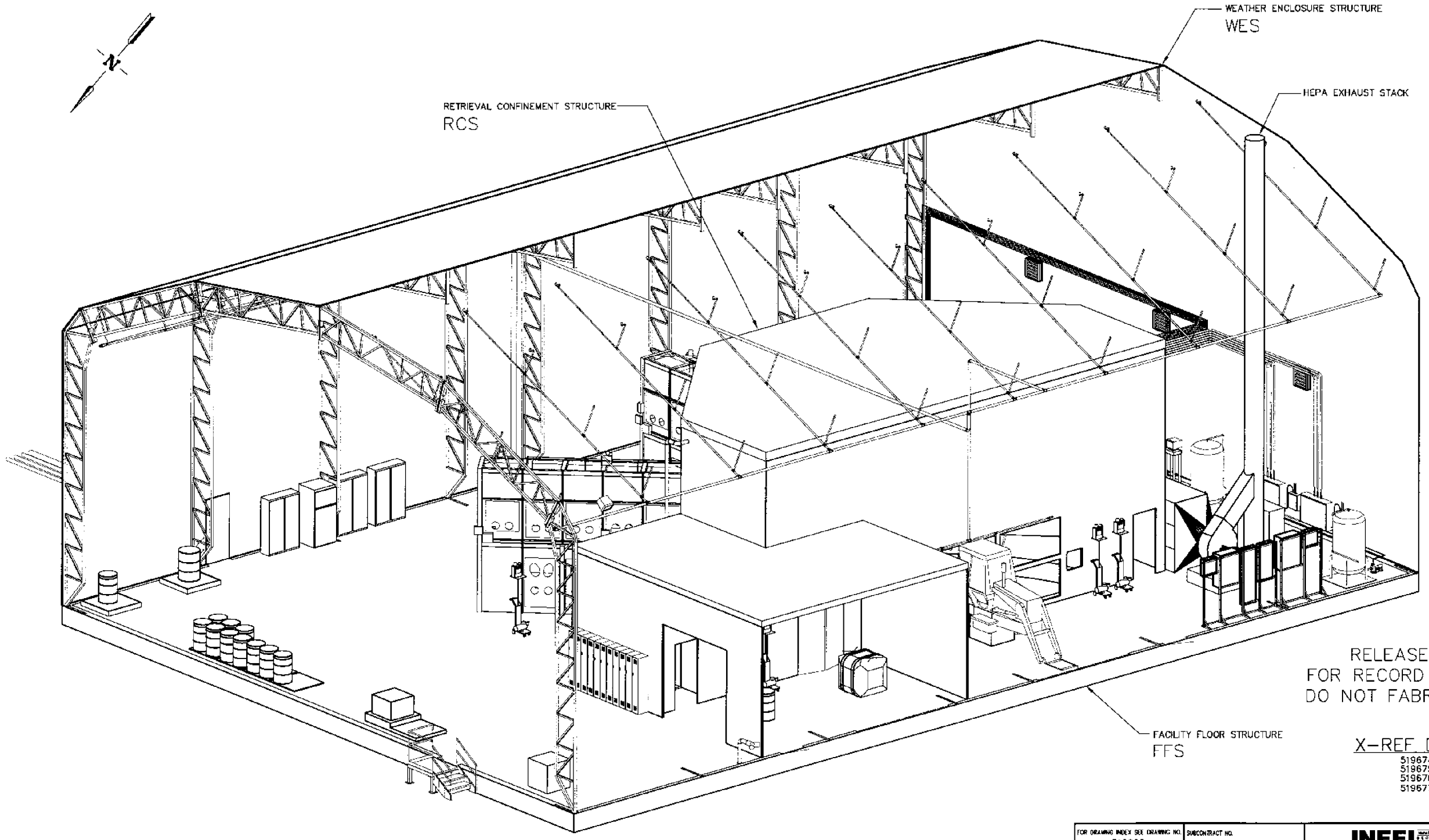

ISOMETRIC VIEW LOOKING SOUTH

RELEASED
FOR RECORD ONLY
DO NOT FABRICATE

X-REF DRAWINGS
519674-A.DWG
519675-A.DWG
519676-A.DWG
519677-A.DWG

REVISIONS		
REV	DESCRIPTION	EFFECTIVE DATE:

FOR DRAWING INDEX SEE DRAWING NO. 519620	SUBCONTRACT NO.	INEEL
NO SCALE	REQUESTER: SA DAVIES	OU 7-10 GLOVEBOX EXCAVATOR METHOD PROJECT RCS
	DESIGN: DN NISHIOKA	
	DRAWN: CA BEHM	
	PROJECT NO. 021052	ISOMETRIC VIEW LOOKING SOUTH
	SPEC CODE	
DESIGN PHASE: CONCEPTUAL	FOR REVIEW/APPROVAL SIGNATURES SEE DAR NO. 87799	SIZE D · CAGE CODE 01MF3 · INDEX CODE NUMBER AREA 098 TYPE 0671 CL 00 ORIG 090 · DWG-519626 · REV A
SAFETY CATEGORY: SEE GENERAL NOTES	EFFECTIVE DATE:	SCALE: NONE · SHEET T-8

Layout Name: Isometric looking Bar:NBE
Date: 12/13/01 - 06:25 A.M.
File: 519626-A.dwg
Path: P:\PIPE\GEM_2002

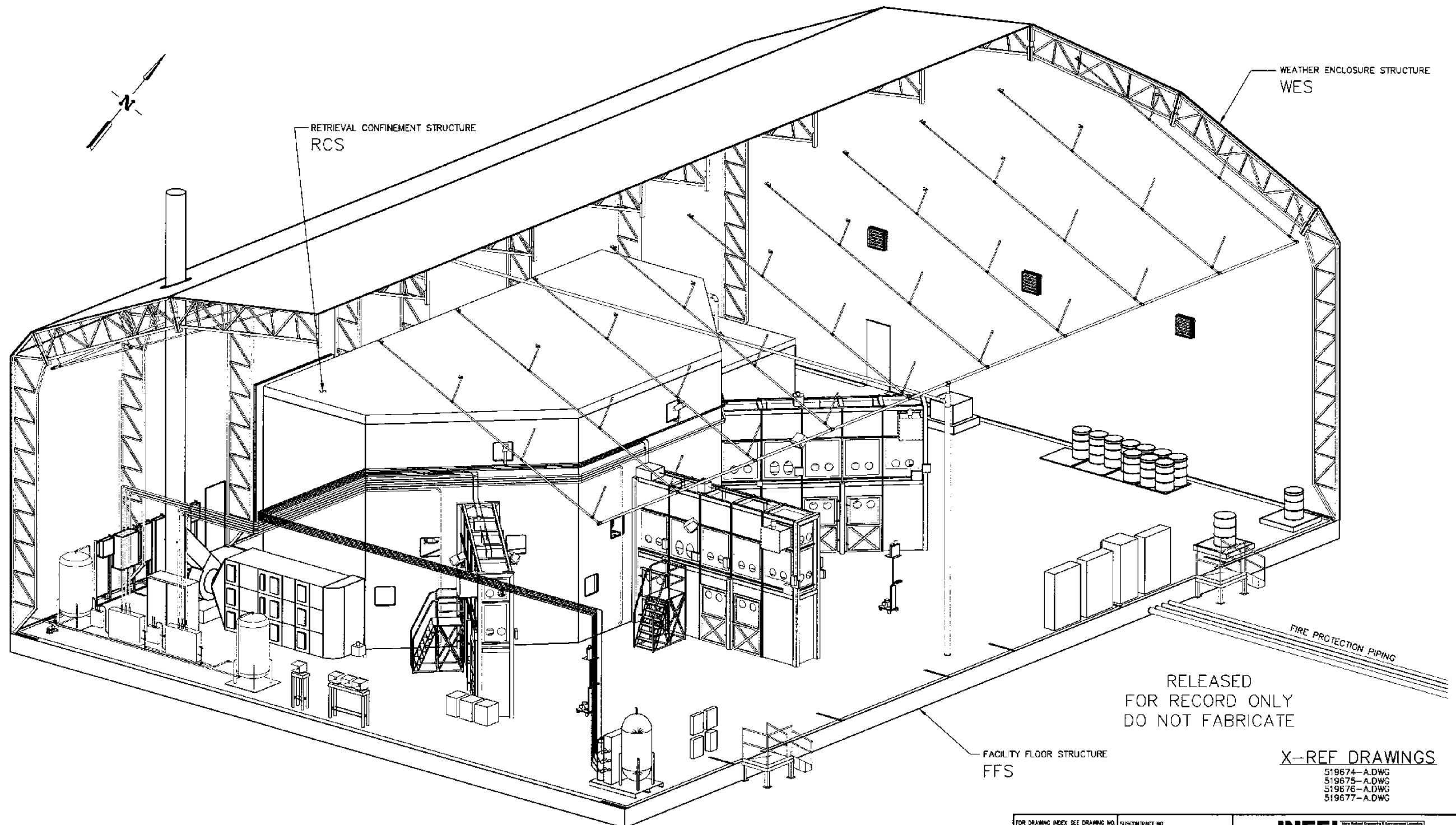

RELEASED
FOR RECORD ONLY
DO NOT FABRICATE

ISOMETRIC VIEW LOOKING NORTH

X-REF DRAWINGS
519674-A.DWG
519675-A.DWG
519676-A.DWG
519677-A.DWG

REVISIONS		
REV	DESCRIPTION	EFFECTIVE DATE:

FOR DRAWING INDEX SEE DRAWING NO. 519620	SUBCONTRACT NO.	INEEL
NO SCALE	REQUESTER: SA DAVIES	OU 7-10 GLOVEBOX EXCAVATOR METHOD PROJECT RCS
	DESIGN: DN NISHIOKA	
	DRAWN: CA BEHM	ISOMETRIC VIEW LOOKING NORTH
	PROJECT NO. 021052	
	SPEC CODE	
DESIGN PHASE: CONCEPTUAL	FOR REVIEW/APPROVAL SIGNATURES SEE DAR NO. 87799	SIZE D · CAGE CODE 01MF3 · INDEX CODE NUMBER AREA 098 TYPE 0671 CL 00 DWG 090 · DWG-519627 · REV A
SAFETY CATEGORY: SEE GENERAL NOTES	EFFECTIVE DATE:	SCALE: NONE · SHEET T-9

File: 519627-A.dwg
Path: P:\PITS\GEM_2002
Layout Name: Isometric looking
Date: 12/13/01 - 1:06 P.M.

REVISIONS		
REV	DESCRIPTION	EFFECTIVE DATE:

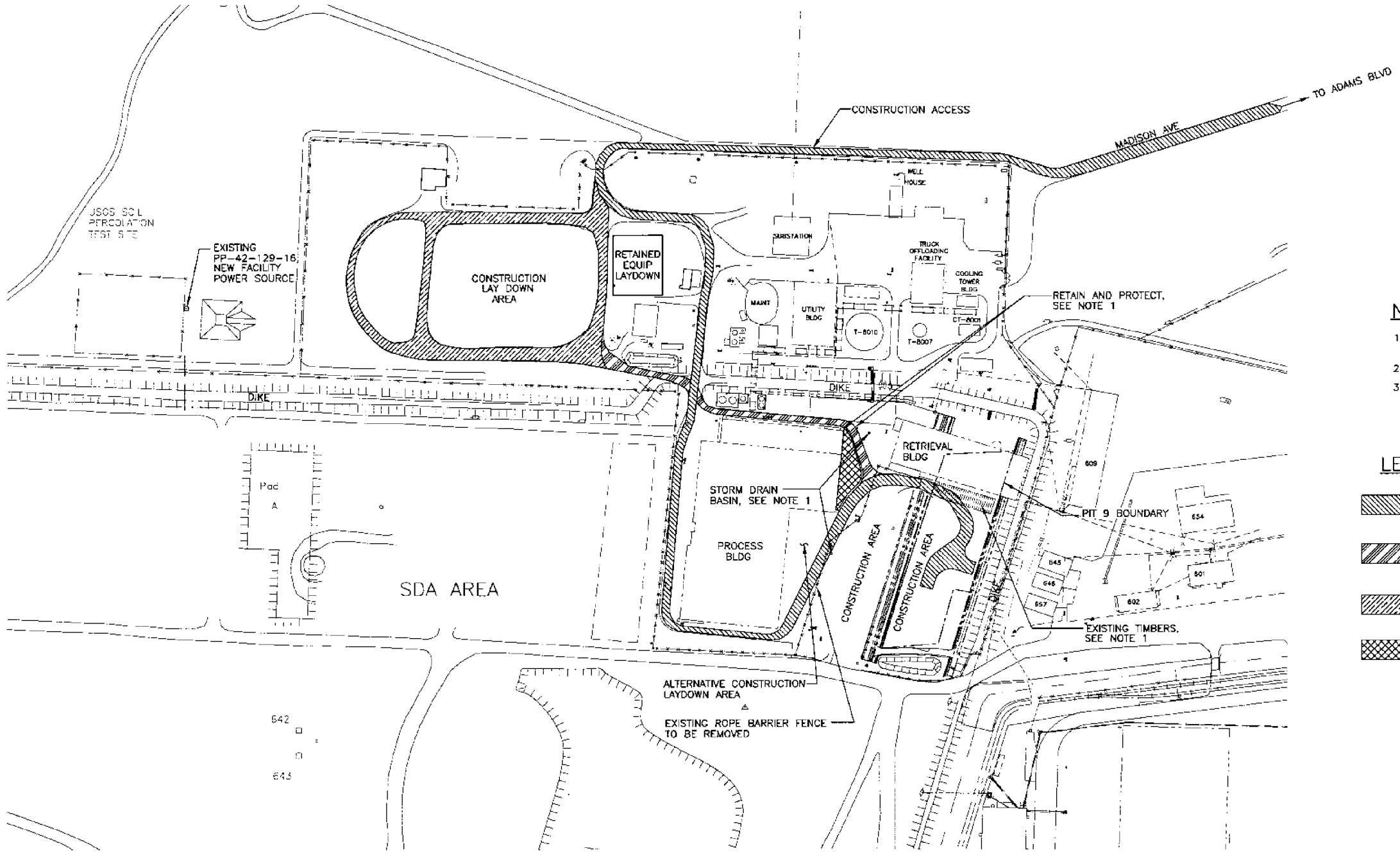

EXISTING SITE PLAN

NOTES

1. RETAIN AND PROTECT ALL FACILITIES UNLESS OTHERWISE NOTED.
2. COORDINATE DATUM: RWMC SITE SPECIFIC
3. ELEVATIONS ARE BASE ON "NGVD 1929"

LEGEND

- MAIN CONSTUCTION ACCESS TO PIT 9 AREA
- LIMITED CONSTRUCTION ACCESS (NO LARGE TRUCKS)
- MAIN LAYDOWN AREA ACCESS
- RETAIN AND PROTECT THIS AREA, TO BE KEPT CLEAR

RELEASED
FOR RECORD ONLY
DO NOT FABRICATE

X-REF DRAWINGS

519678-A.DWG

FOR DRAWING INDEX SEE DRAWING NO. 519620	SUBCONTRACT NO.	INEEL BECHTEL BWXT IDAHO, LLC
100' 50' 0 100' SCALE: 1" = 100.0'	REQUESTER: SA DAVIES DESIGN: KD KINGSFORD DRAWN: CA BEHM	OU 7-10 GLOVEBOX EXCAVATOR METHOD PROJECT
	PROJECT NO. 021052 SPEC CODE	SITE PLAN
DESIGN PHASE: CONCEPTUAL	FOR REVIEW/APPROVAL SIGNATURES SEE DWR NO. 67799	SIZE D · CAGE CODE · INDEX CODE NUMBER AREA 098 TYPE 0100 CL 02 ORG 090 · DWG-519628 · REV A
SAFETY CATEGORY: SEE GENERAL NOTES	EFFECTIVE DATE:	SCALE: 1" = 100.0' · SHEET C-1

File: 519628-A.dwg ID: ABE Layout Name: EXISTING
Path: P:\PTS\GEM_2002 Date: 12/13/01 - 2:03 P.M.

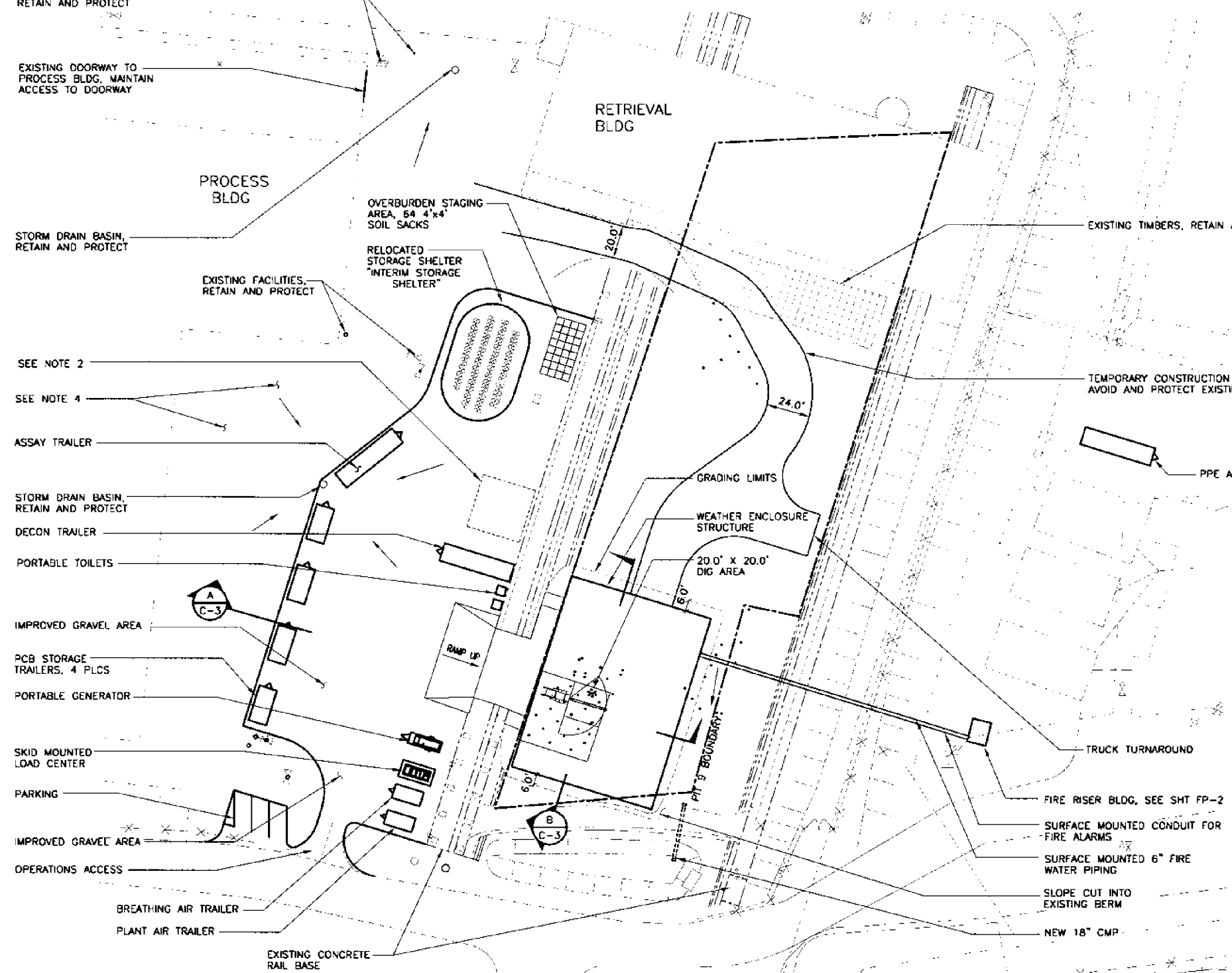

IMPROVED ENLARGED SITE PLAN

LEGEND

- • SOIL PROBES
- → GRADE TO DRAIN

NOTES

1. RETAIN AND PROTECT ALL FACILITIES UNLESS OTHERWISE NOTED.
2. TEMPORARY STORAGE AREA
3. 100 YEAR FLOOD PLAIN ELEVATION = 5008.9'
4. ALTERNATIVE CONSTRUCTION MATERIAL LAYDOWN AREA.

RELEASED FOR RECORD ONLY DO NOT FABRICATE

X-REF DRAWINGS
519678-A.DWG

REVISIONS		
REV	DESCRIPTION	EFFECTIVE DATE
B	SEE DAR #-	

FOR DRAWING INDEX SEE DRAWING NO 519620	SUBCONTRACT NO.	INEEL
SCALE: 1" = 30.0'	REQUESTER: SA DAVIES	OU 7-10 GLOVEBOX EXCAVATOR METHOD PROJECT
	DESIGN: CO KINGSFORD	
	DRAWN: CA BEHM	
	PROJECT NO 021052	IMPROVED ENLARGED SITE PLAN
	SPEC CODE	
DESIGN PHASE: CONCEPTUAL	FOR REVIEW/APPROVAL SIGNATURES SEE DAR NO. 87799	SIZE D · CAGE CODE · INDEX CODE NUMBER: AREA 098, TYPE 0100, CL 02, ORIG 090 · DWG-519629 · REV B
SAFETY CATEGORY: SEE GENERAL NOTES	EFFECTIVE DATE	SCALE 1" = 30.0' · SHEET C-2

File 519629-B.dwg ID: ABE Layout Name: Improved site plan
Path: P:\INEEL-EXT-01-01512-REV-B Date: 01/10/02 - 07:29 A.M.

REVISIONS		
REV	DESCRIPTION	EFFECTIVE DATE

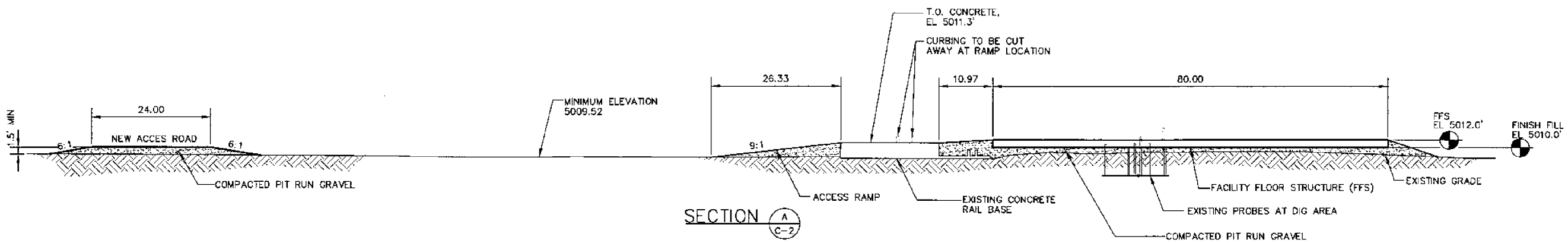

SECTION A / C-2

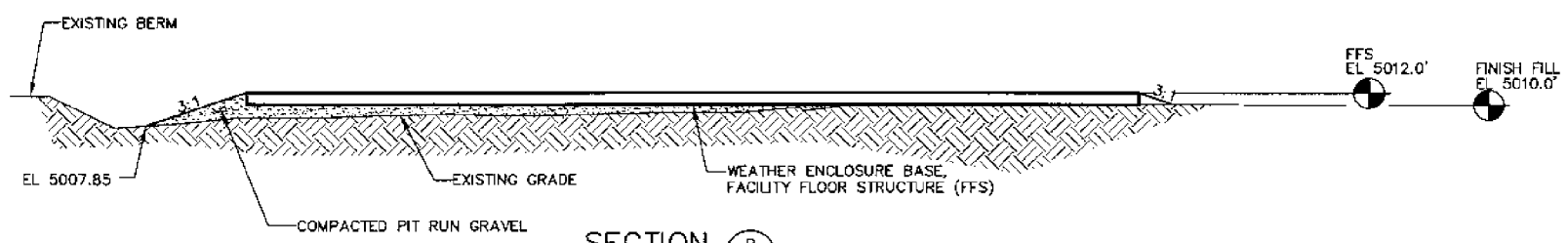

SECTION B / C-2

RELEASED
FOR RECORD ONLY
DO NOT FABRICATE

FOR DRAWING INDEX SEE DRAWING NO. 519620	SUBCONTRACT NO.	INEEL (Idaho National Engineering & Environmental Laboratory) BECHTEL BWXT IDAHO, LLC
10' 5' 0 10' SCALE: 1" = 10.0'	REQUESTER: SA DAVIES	OU 7-10 GLOVEBOX EXCAVATOR METHOD PROJECT
	DESIGN: CD KINGSFORD	
	DRAWN: CA BEHM	
	PROJECT NO. 021052	CIVIL SECTIONS
	SPEC CODE	
DESIGN PHASE: CONCEPTUAL	FOR REVIEW/APPROVAL SIGNATURES SEE DAR NO. 87799	SIZE D; CAGE CODE; INDEX CODE NUMBER AREA 098 TYPE 0100 CL 02 ORG 090; DWG 519630; REV A
SAFETY CATEGORY: SEE DRAW. NOTES	EFFECTIVE DATE:	SCALE: 1" = 10.0'; SHEET C-3

File: 519630-A.dwg
Path: P:\PT9\CEM_2002
Layout Name: Layout1
Date: 2/13/01 - 3:08 P.M.
ID: ABE

REVISIONS		
REV	DESCRIPTION	EFFECTIVE DATE
B	SEEE DAR # -	

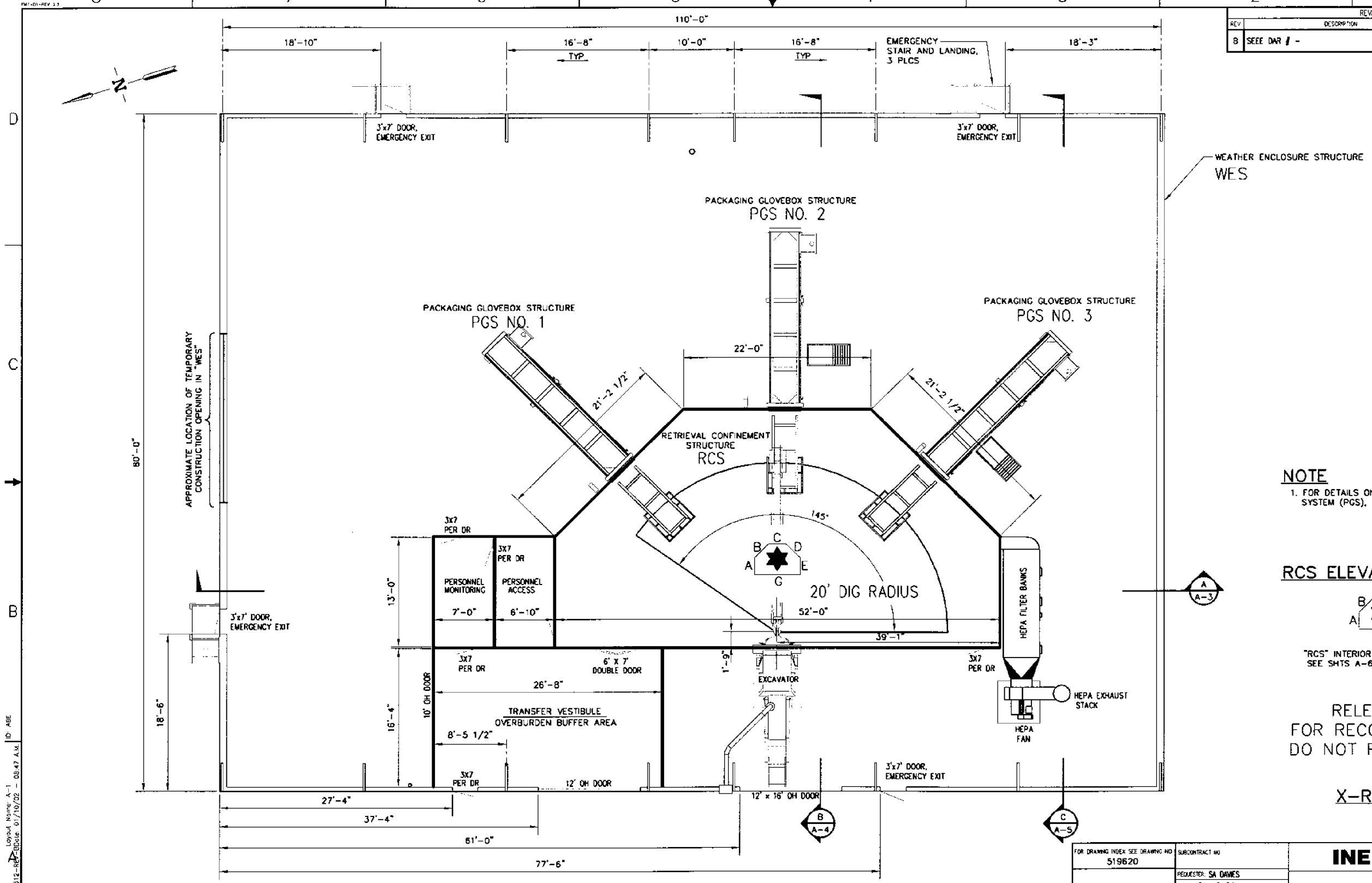

PLAN

NOTE

1. FOR DETAILS ON THE PACKAGING GLOVEBOX SYSTEM (PGS), SEE SHTS S-3 THRU S-8.

RCS ELEVATION LEGEND

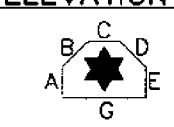

"RCS" INTERIOR WALL ELEVATIONS, SEE SHTS A-6

RELEASED
FOR RECORD ONLY
DO NOT FABRICATE

X-REF DRAWINGS

519674-A.DWG
519677-A.DWG

FOR DRAWING INDEX SEE DRAWING NO 519620	SUBCONTRACT NO	INEEL
SCALE: 3/16" = 1'-0"	REQUESTOR: SA DAVIES	OU 7-10 GLOVEBOX EXCAVATOR METHOD PROJECT WES / RCS / PGS
	DESIGN: DN NISHIOKA	
	DRAWN: CA BOHM	FACILITY PLAN
	PROJECT NO 021052	
	SPEC CODE	
DESIGN PHASE: CONCEPTUAL	FOR REVIEW/APPROVAL SIGNATURES SEE DAR NO. 87799	SITE D · CADD CODE 01MF3 · INDEX CODE NUMBER AREA 098 TYPE 0571 G 00 DRC 090 · DWG- 519631 · REV B
SAFETY CATEGORY: SEE GENERAL NOTES	EFFECTIVE DATE	SCALE 3/16" = 1'-0" · SHEET A-1

File: 519631-B.dwg
Path: P:\INEEL-EXT-01-01512-REBOOK 01/10/02 - 08:47 A.M. | Layout Name: A-1 | ID: ABE

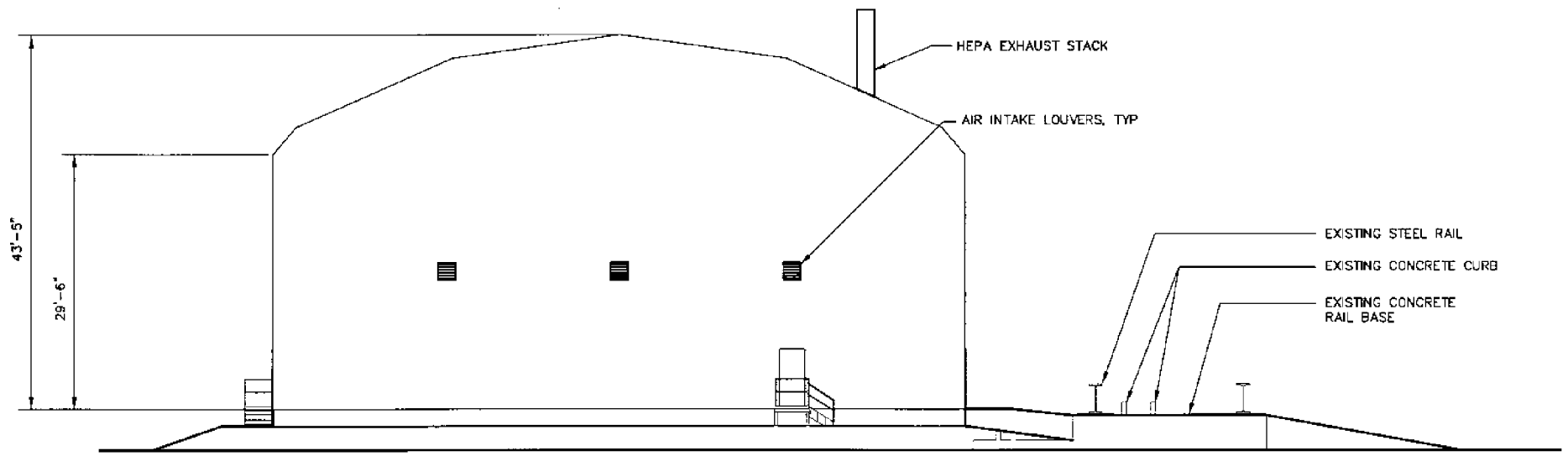

NORTH ELEVATION

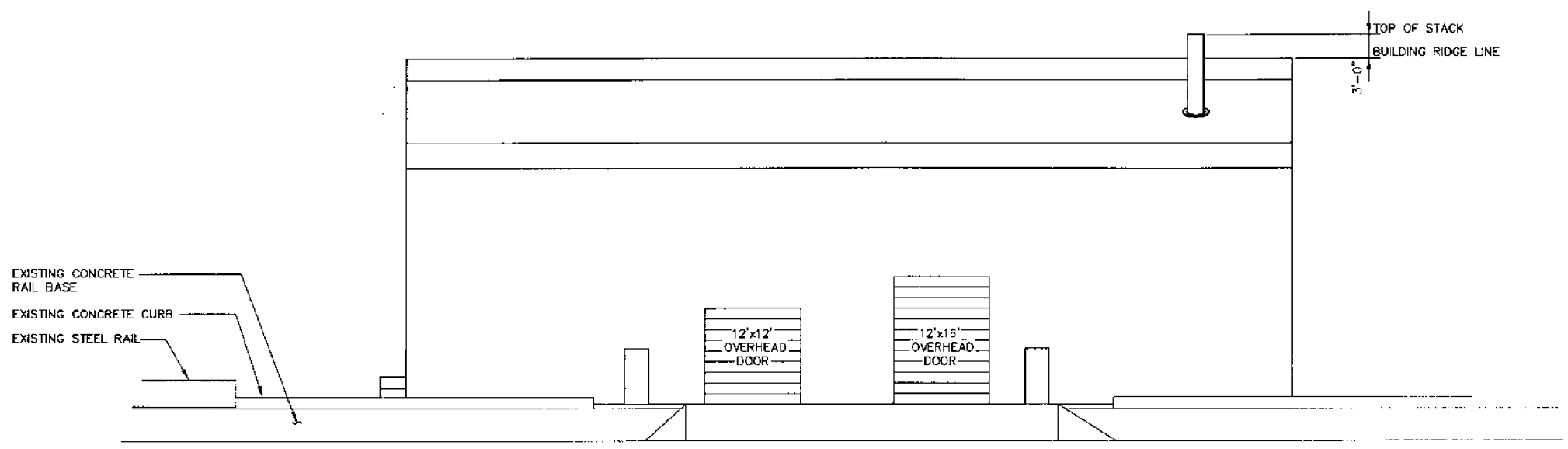

WEST ELEVATION

RELEASED
FOR RECORD ONLY
DO NOT FABRICATE

X-REF DRAWINGS

519677-A.DWG

REVISIONS		
REV	DESCRIPTION	EFFECTIVE DATE

FOR DRAWING INDEX SEE DRAWING NO. 519620

SCALE: 1/8" = 1'-0"

DESIGN PHASE: CONCEPTUAL

SAFETY CATEGORY: SEE GENERAL NOTES

SUBCONTRACT NO.

REQUESTER: SA DAVIES
DESIGN: DN NISHIOKA
DRAWN: CA BEHM
PROJECT NO. 021052
SPEC CODE
FOR REVIEW/APPROVAL SIGNATURES SEE DAR NO. 87799
EFFECTIVE DATE:

INEEL

OU 7-10
GLOVEBOX EXCAVATOR METHOD PROJECT
WES

ELEVATIONS

SIZE	CAGE CODE	INDEX CODE NUMBER AREA	TYPE	CL	ORIG	DWG-	REV
D	01MF3	098	0671	00	090	519632	A

SCALE: 1/8" = 1'-0"

SHEET A-2

File: 519632-A.dwg
Path: P:\PIT9\GEM_2002
Layout Name: WES ELEV'S
Date: 12/13/01 - 3:19 P.M.
ID: ABE

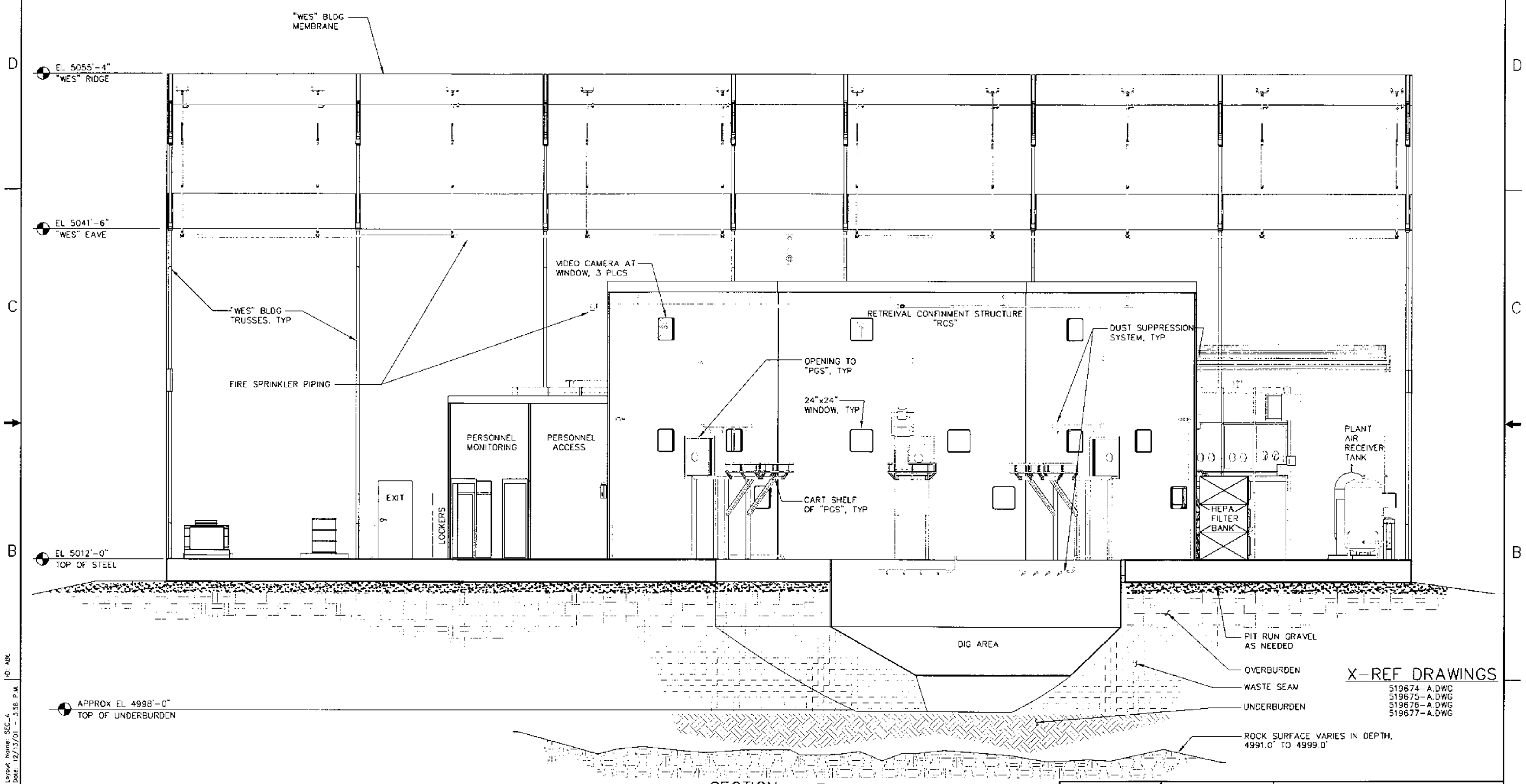

SECTION A/A-1
SCALE: 1/4" = 1'-0"

X-REF DRAWINGS
519674-A.DWG
519675-A.DWG
519676-A.DWG
519677-A.DWG

RELEASED FOR RECORD ONLY DO NOT FABRICATE

NOTES
1. ELEVATIONS ARE BASE ON "NGVD 1929"

REVISIONS		
REV	DESCRIPTION	EFFECTIVE DATE

FOR DRAWING INDEX SEE DRAWING NO 519620
SCALE: 1/4" = 1'-0"
DESIGN PHASE: CONCEPTUAL
SAFETY CATEGORY: SEE GENERAL NOTES

SUBCONTRACT NO.
REQUESTER: SA DAVIES
DESIGN: DN NISHIOKA
DRAWN: CA BEHM
PROJECT NO. 021052
SPEC CODE
FOR REVIEW/APPROVAL SIGNATURES SEE DAR NO 87799
EFFECTIVE DATE

INEEL
OU 7-10
GLOVEBOX EXCAVATOR METHOD PROJECT
WES / RCS / PGS
BUILDING SECTION

SIZE	CAGE CODE	INDEX CODE NUMBER AREA	TYPE	CL	ORIG	DWG-	REV
D	01MF3	098	0671	00	090	519633	A

SCALE: NOTED
SHEET A-3

File: 519633-A.dwg
Path: P:\PI9\CEM_2002
Layout Name: SEC_A
Date: 12/13/01 - 3:58 P.M.
ID: ABL

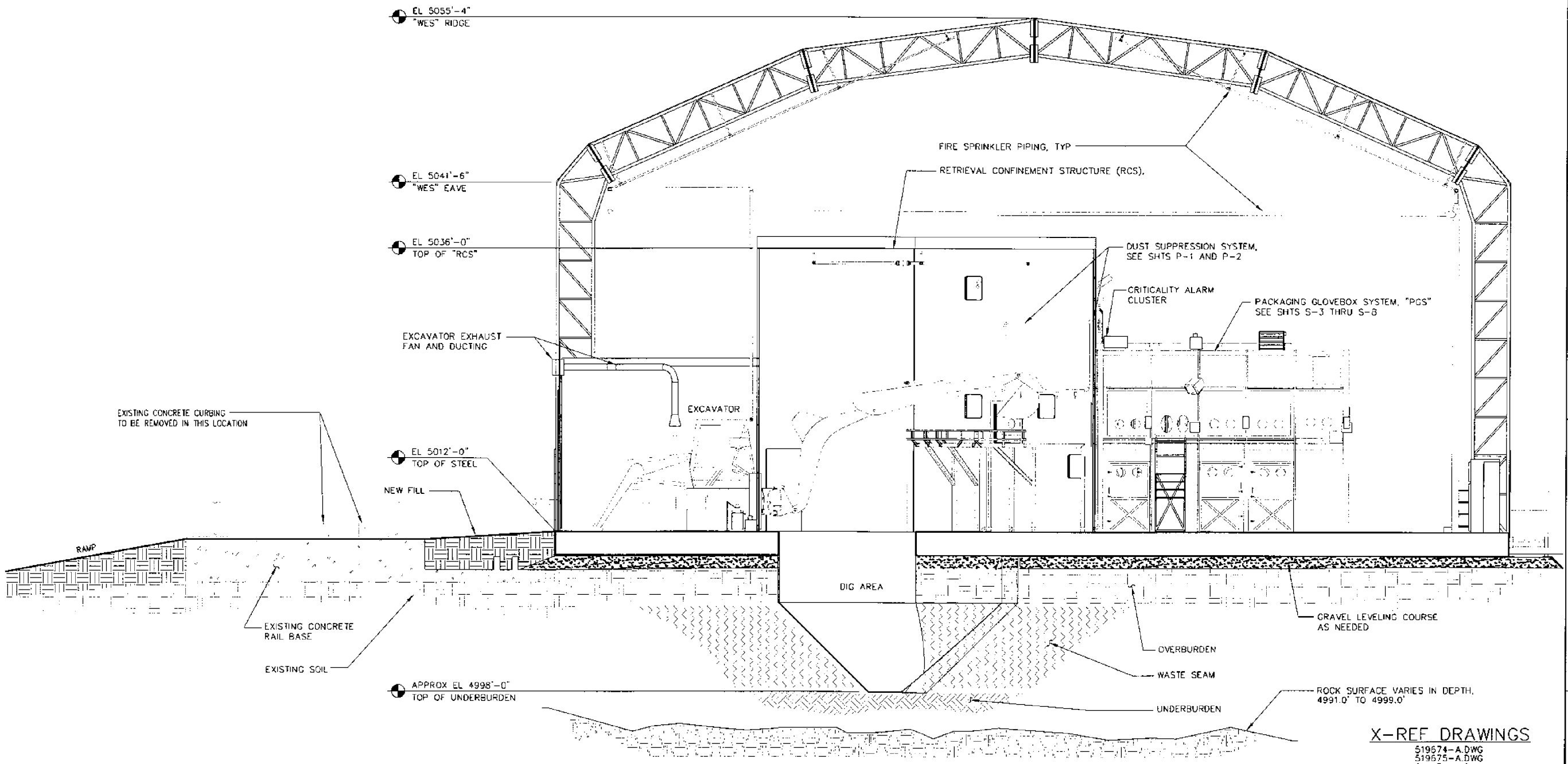

SECTION B/A-1
SCALE: 1/4" = 1'-0"

X-REF DRAWINGS

519674-A.DWG
519675-A.DWG
519676-A.DWG
519677-A.DWG

NOTES

1. ELEVATIONS ARE BASE ON "NGVD 1929"

RELEASED
FOR RECORD ONLY
DO NOT FABRICATE

FOR DRAWING INDEX SEE DRAWING NO. 519620	SUBCONTRACT NO	INEEL
SCALE: 1/4" = 1'-0"	REQUESTER SA DAVIES	OU 7-10 GLOVEBOX EXCAVATOR METHOD PROJECT WES / RCS / PGS
	DESIGN DN NISHIOKA	
	DRAWN CA BEHM	
	PROJECT NO 021052	BUILDING SECTION
	SPEC CODE	
DESIGN PHASE CONCEPTUAL	FOR REVIEW/APPROVAL SIGNATURES SEE DAR NO 87799	SIZE D · CAGE CODE 01MF3 · INDEX CODE NUMBER AREA 098 TYPE 0671 QL 00 ORIG 090 · DWG-519634 · REV A
SAFETY CATEGORY SEE GENERAL NOTES	EFFECTIVE DATE	SCALE NOTED · SHEET A-4

REVISIONS

REV	DESCRIPTION	EFFECTIVE DATE

File 519634-A.dwg
Path: P:\PI19\GEM_2002
Layout Name: SEC_B
Date: 12/13/01 - 3:55 PM
ID: ABE

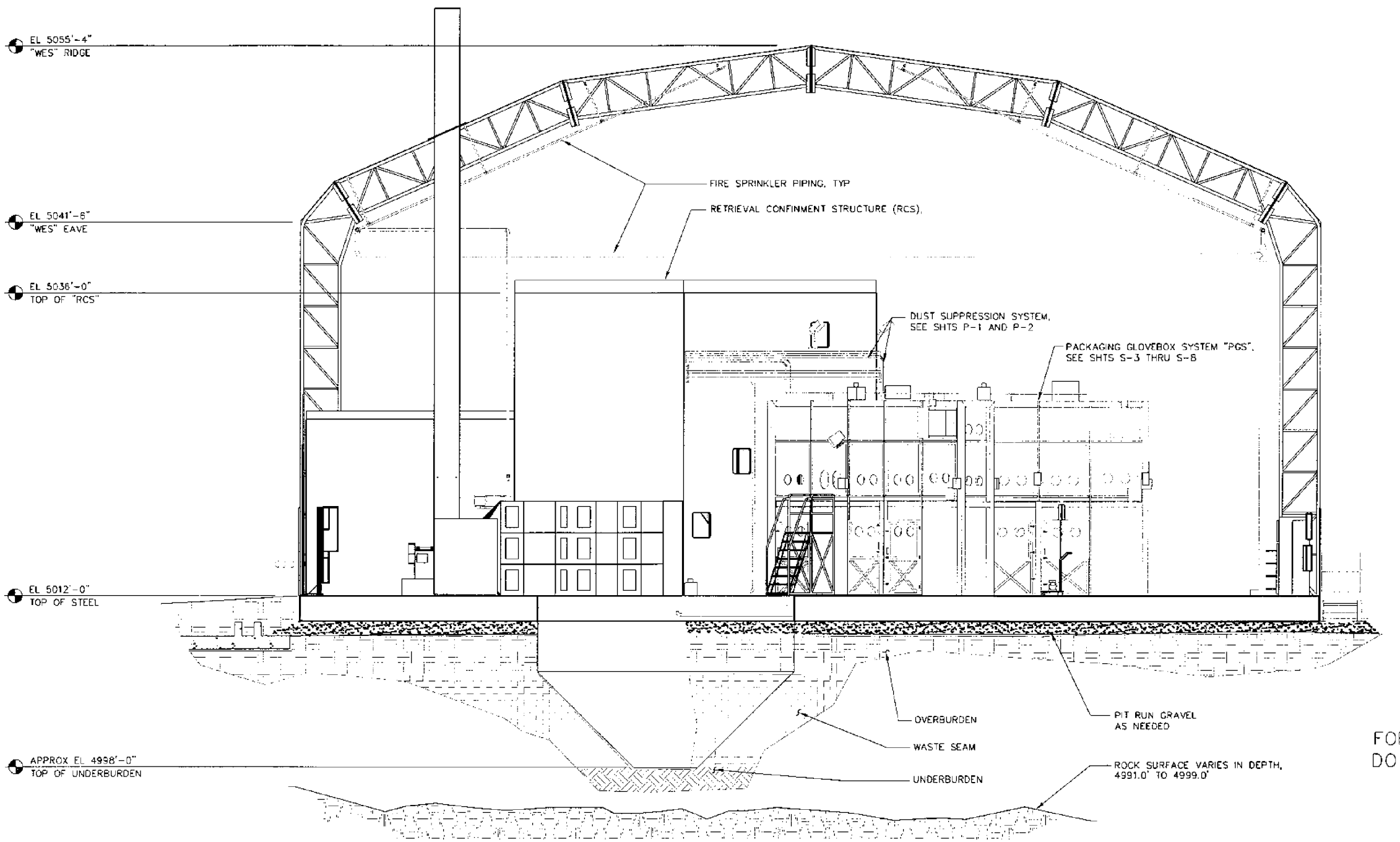

SECTION C/A-1
SCALE: 1/4" = 1'-0"

RELEASED
FOR RECORD ONLY
DO NOT FABRICATE

X-REF DRAWINGS
519674-A.DWG
519675-A.DWG
519676-A.DWG
519677-A.DWG

NOTES
1. ELEVATIONS ARE BASE ON "NGVD 1929"

REVISIONS		
REV	DESCRIPTION	EFFECTIVE DATE

FOR DRAWING INDEX SEE DRAWING NO 519620	SUBCONTRACT NO	INEEL
SCALE 1/4" = 1'-0"	REQUESTER: SA DAVIES	OU 7-10 GLOVEBOX EXCAVATOR METHOD PROJECT WES / RCS / PGS
	DESIGN: DN NISHIOKA	
	DRAWN: CA BEHM	
	PROJECT NO 021052	BUILDING SECTION
	SPEC CODE	
DESIGN PHASE CONCEPTUAL	FOR REVIEW/APPROVAL SIGNATURES SEE DAR NO 87799	SIZE D · CAGE CODE 01MF3 · INDEX CODE NUMBER AREA 098 TYPE 0671 CL 00 DWG 090 · DWG-519635 · REV A
SAFETY CATEGORY SEE GENERAL NOTES	EFFECTIVE DATE	SCALE: NOTED · SHEET A-5

File: 519635-A.dwg
Path: P:\PIT9\CEM_2002
Layout Name: SEC_C
Date: 12/13/01 - 4:18 P.M.
ID: ABE

REV	DESCRIPTION	EFFECTIVE DATE

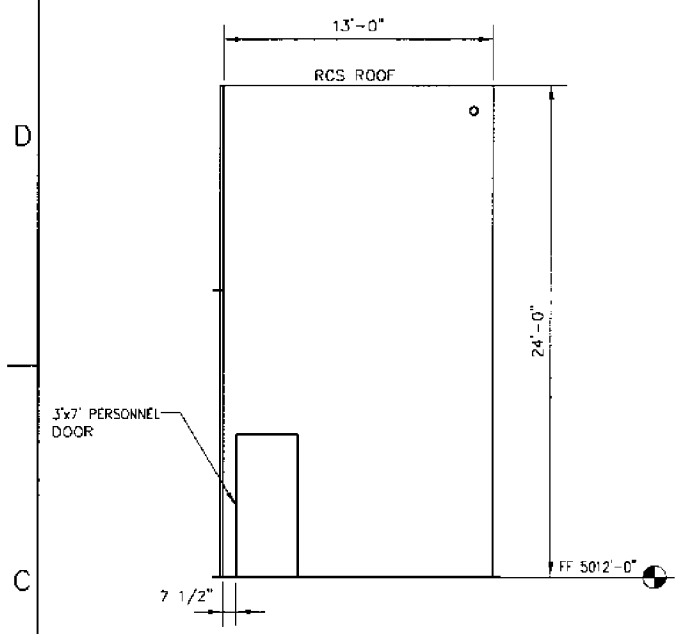

ELEVATION (A / A-1)

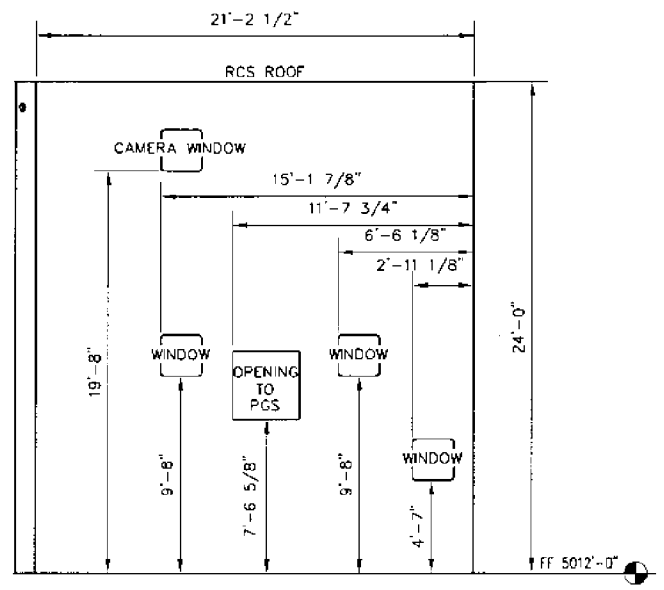

ELEVATION (B / A-1)

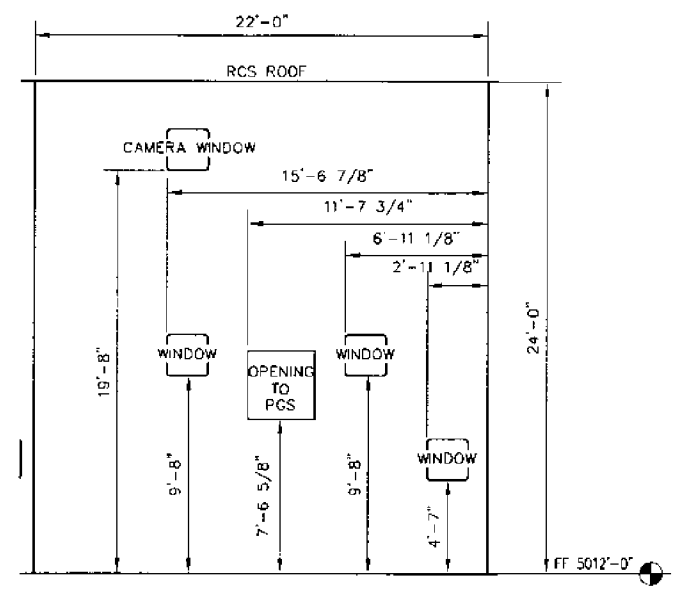

ELEVATION (C / A-1)

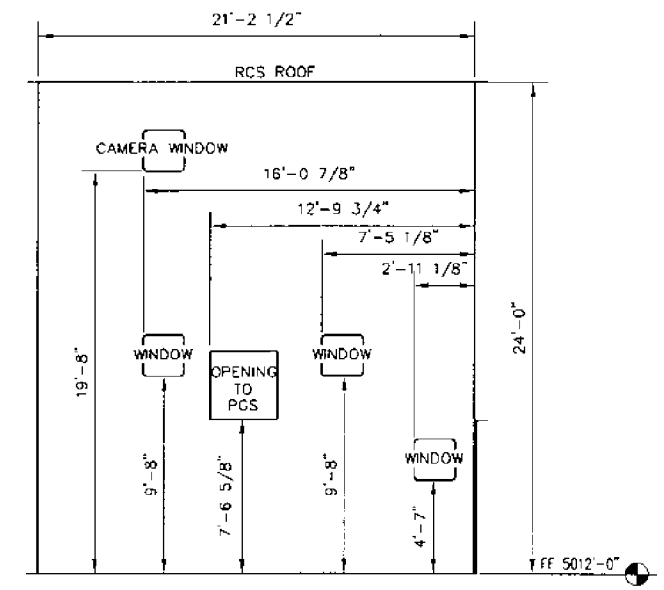

ELEVATION (D / A-1)

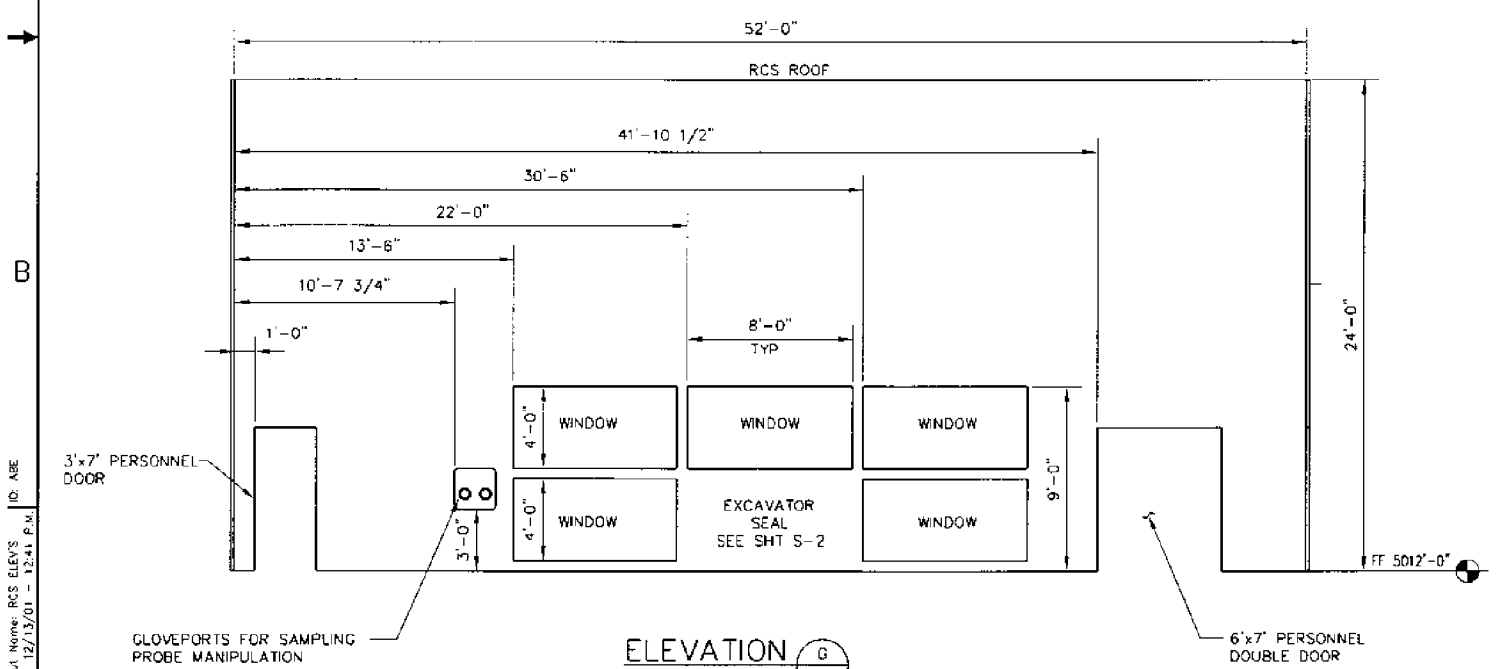

ELEVATION (G / A-1)

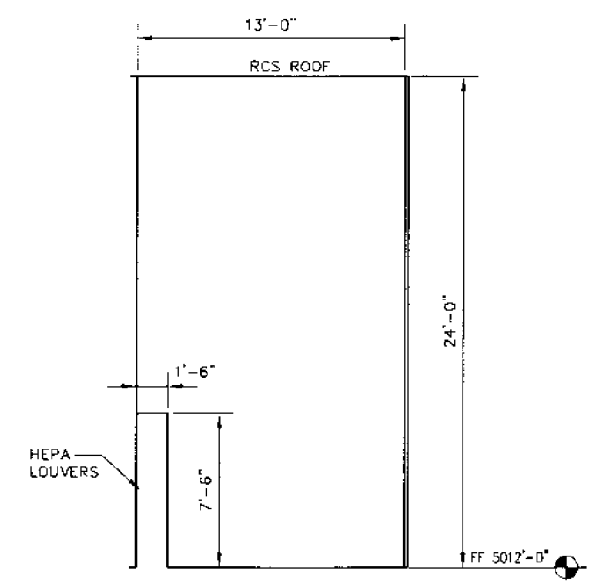

ELEVATION (E / A-1)

ELEVATION LEGEND

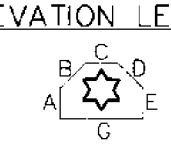

"RCS" INTERIOR WALL ELEVATIONS

NOTES

1. RETRIEVAL CONFINEMENT STRUCTURE (RCS) CONSTRUCTION SHALL BE MANUFACTURED BY "PERMACON" OR APPROVED EQUAL.
2. ALL LOCATIONS OF THE OPENINGS, DOORS AND WINDOWS ARE APPROXIMATE, EXTACT DIMENSIONAL LOCATIONS ARE TO BE DETERMINED BY APPROVED BLDG MANUFACTURER.
3. ELEVATIONS ARE BASED ON "NGVD 1929"

RELEASED
FOR RECORD ONLY
DO NOT FABRICATE

X-REF DRAWINGS

519677-A.DWG

FOR DRAWING INDEX SEE DRAWING NO. 519620	SUBCONTRACT NO	INEEL
SCALE: 1/4" = 1'-0"	REQUESTER: SA DAVIES DESIGN: DN NISHIOKA DRAWN: CA BEHM PROJECT NO SPEC CODE	OU 7-10 GLOVEBOX EXCAVATOR METHOD PROJECT RCS
DESIGN PHASE: CONCEPTUAL	FOR REVIEW/APPROVAL SIGNATURES SEE DAR NO 021052	"RCS" INTERIOR ELEVATIONS
SAFETY CATEGORY: SEE GENERAL NOTES	EFFECTIVE DATE	SIZE D · CAGE CODE 01MF3 · INDEX CODE NUMBER AREA 098 TYPE 0571 PL 00 DWG 090 · DWG-519636 · REV A
		SCALE: 1/4" = 1'-0" · SHEET A-6

Layout Name: RCS ELEVS Date: 12/13/01 - 12:41 P.M. ID: ABE

File: 519636-A.dwg Path: P:\PITS\GEM_2002

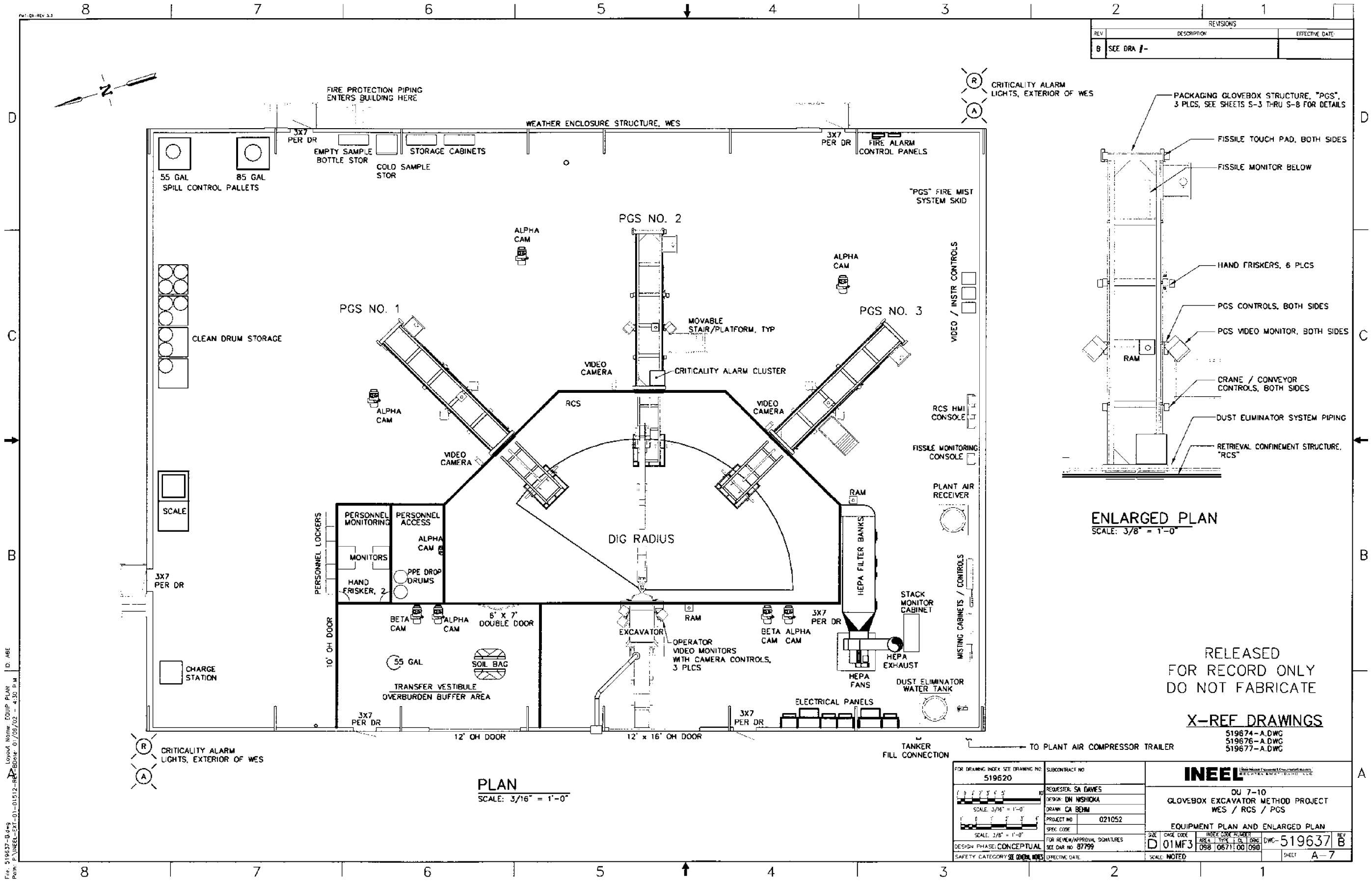

REVISIONS
REV
DESCRIPTION
EFFECTIVE DATE
B
SEE DRA #-
FIRE PROTECTION PIPING ENTERS BUILDING HERE
WEATHER ENCLOSURE STRUCTURE, WES
3X7 PER DR
EMPTY SAMPLE BOTTLE STOR
COLD SAMPLE STOR
STORAGE CABINETS
FIRE ALARM CONTROL PANELS
55 GAL
85 GAL
SPILL CONTROL PALLETS
"PGS" FIRE MIST SYSTEM SKID
CRITICALITY ALARM LIGHTS, EXTERIOR OF WES
PGS NO. 1
PGS NO. 2
PGS NO. 3
ALPHA CAM
MOVABLE STAIR/PLATFORM, TYP
CRITICALITY ALARM CLUSTER
VIDEO CAMERA
RCS
VIDEO / INSTR CONTROLS
RCS HMI CONSOLE
FISSILE MONITORING CONSOLE
PLANT AIR RECEIVER
CLEAN DRUM STORAGE
SCALE
PERSONNEL MONITORING
PERSONNEL ACCESS
MONITORS
HAND FRISKER, 2
PPE DROP DRUMS
PERSONNEL LOCKERS
DIG RADIUS
RAM
HEPA FILTER BANKS
STACK MONITOR CABINET
MISTING CABINETS / CONTROLS
BETA CAM
6' X 7' DOUBLE DOOR
10' OH DOOR
EXCAVATOR
OPERATOR VIDEO MONITORS WITH CAMERA CONTROLS, 3 PLCS
HEPA EXHAUST
HEPA FANS
DUST ELIMINATOR WATER TANK
55 GAL
SOIL BAG
TRANSFER VESTIBULE
OVERBURDEN BUFFER AREA
CHARGE STATION
ELECTRICAL PANELS
12' OH DOOR
12' x 16' OH DOOR
TANKER FILL CONNECTION
TO PLANT AIR COMPRESSOR TRAILER
PLAN
SCALE: 3/16" = 1'-0"
PACKAGING GLOVEBOX STRUCTURE, "PGS", 3 PLCS, SEE SHEETS S-3 THRU S-8 FOR DETAILS
FISSILE TOUCH PAD, BOTH SIDES
FISSILE MONITOR BELOW
HAND FRISKERS, 6 PLCS
PGS CONTROLS, BOTH SIDES
PGS VIDEO MONITOR, BOTH SIDES
CRANE / CONVEYOR CONTROLS, BOTH SIDES
DUST ELIMINATOR SYSTEM PIPING
RETRIEVAL CONFINEMENT STRUCTURE, "RCS"
ENLARGED PLAN
SCALE: 3/8" = 1'-0"
RELEASED FOR RECORD ONLY DO NOT FABRICATE
X-REF DRAWINGS
519674-A.DWG
519676-A.DWG
519677-A.DWG
FOR DRAWING INDEX SEE DRAWING NO. 519620
SCALE: 3/16" = 1'-0"
SCALE: 3/8" = 1'-0"
DESIGN PHASE: CONCEPTUAL
SAFETY CATEGORY: SEE GENERAL NOTES
SUBCONTRACT NO
REQUESTER: SA DAVIES
DESIGN: DN NISHIOKA
DRAWN: CA BEHM
PROJECT NO 021052
SPEC CODE
FOR REVIEW/APPROVAL SIGNATURES SEE DAR NO 87799
EFFECTIVE DATE
INEEL
OU 7-10
GLOVEBOX EXCAVATOR METHOD PROJECT
WES / RCS / PGS
EQUIPMENT PLAN AND ENLARGED PLAN
SIZE D
CAGE CODE 01MF3
INDEX CODE NUMBER AREA 098 TYPE 0671 CL 00 DRG 090
DWG-519637
REV B
SCALE: NOTED
SHEET A-7

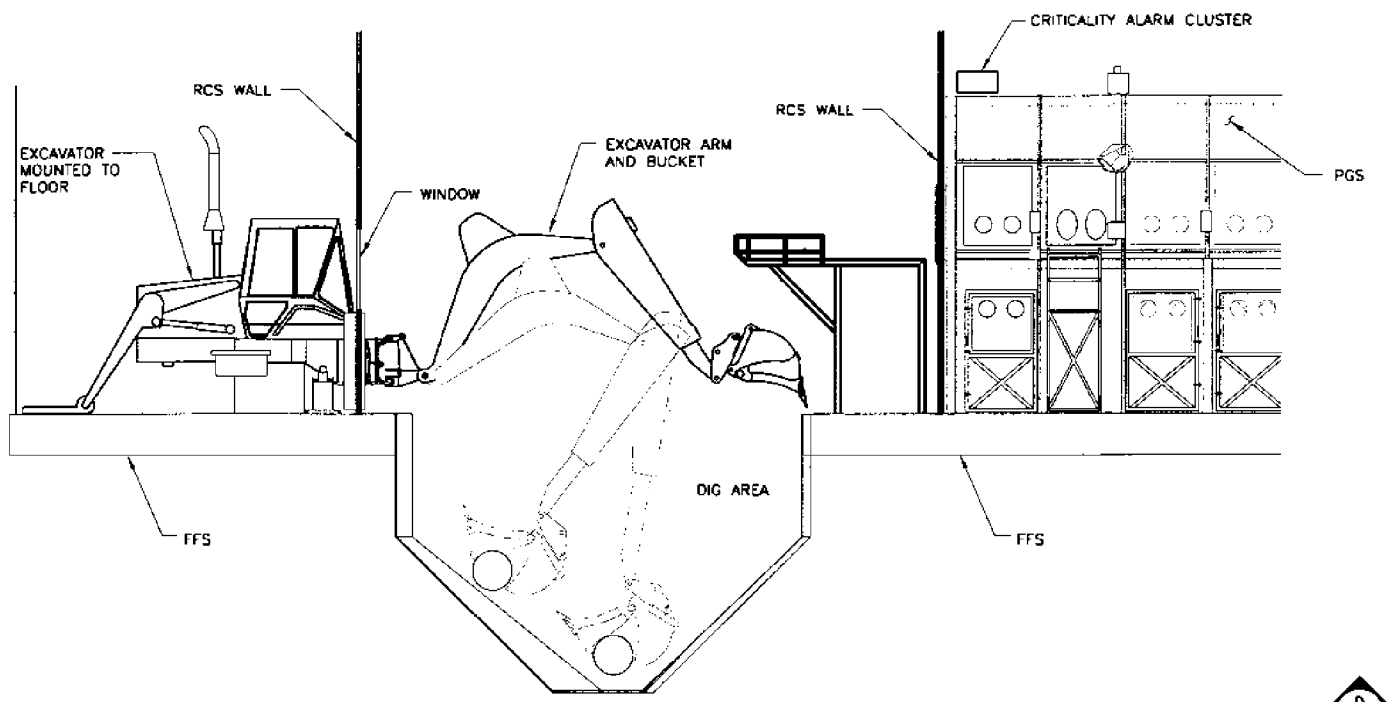

SECTION D
SCALE: 1/4"=1'-0"

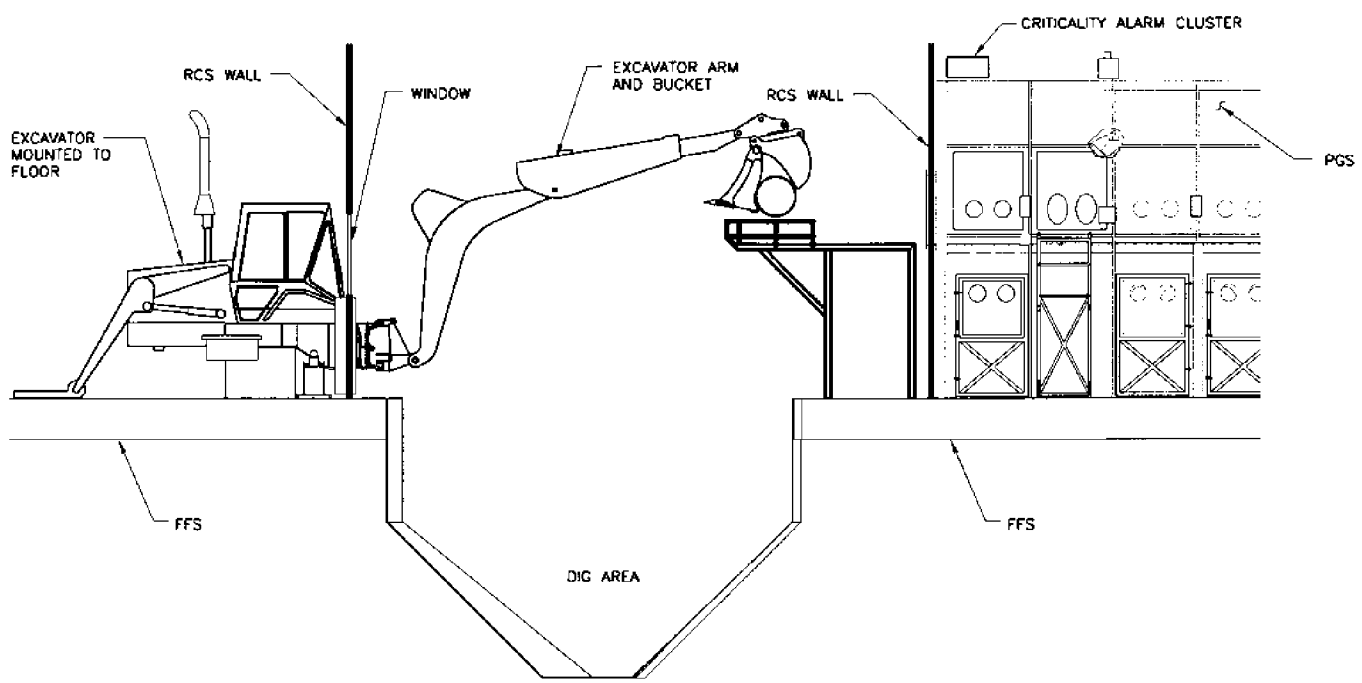

SECTION F
SCALE: 1/4"=1'-0"

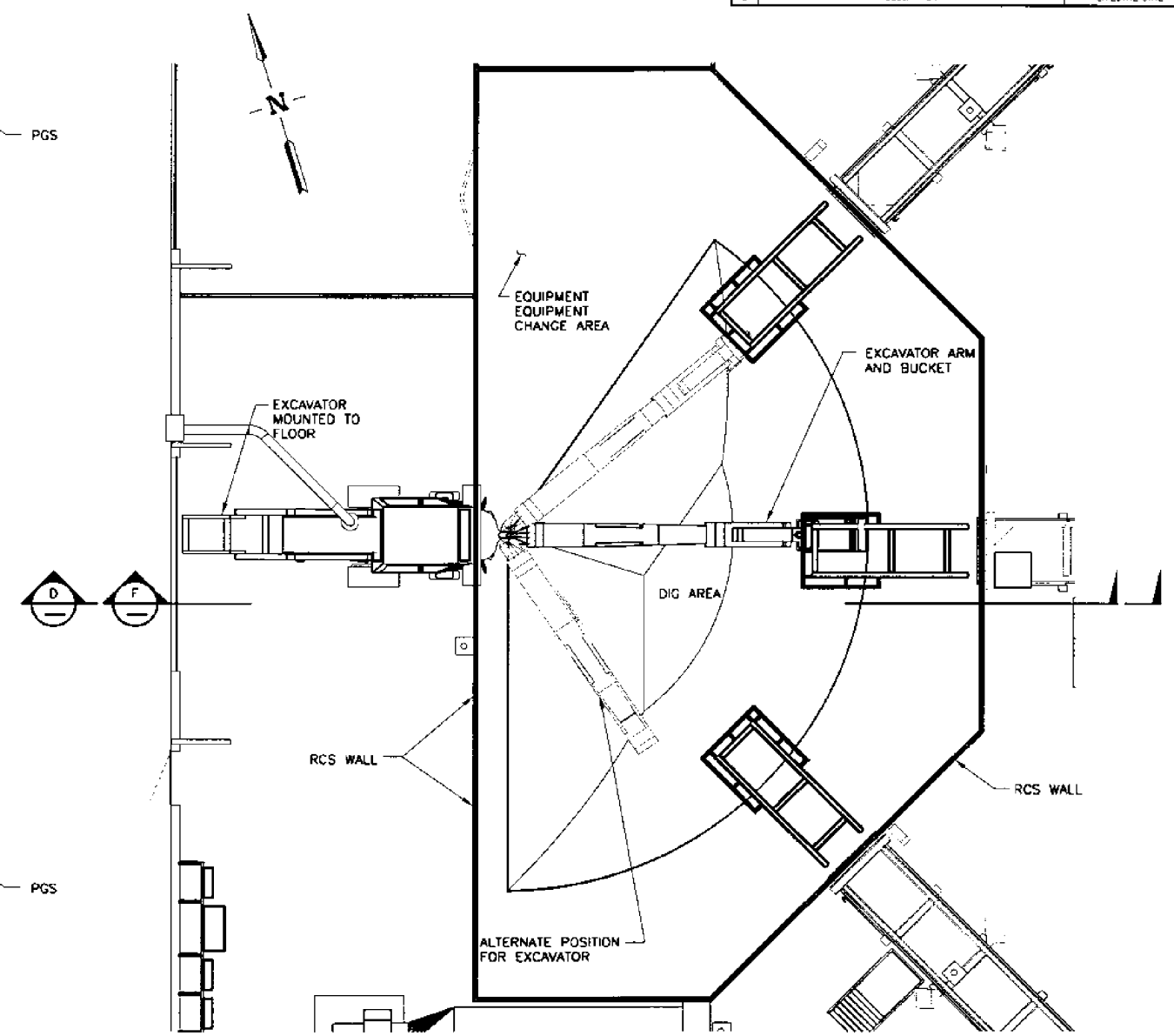

PLAN
SCALE: 1/4"=1'-0"

XREF DRAWINGS

519674-A.DWG
519676-A.DWG

RELEASED
FOR RECORD ONLY
DO NOT FABRICATE

FOR DRAWING INDEX SEE DRAWING NO 519620	SUBCONTRACT NO	INEEL
SCALE: 1/4" = 1'-0"	REQUESTER: SA DAVIES DESIGN: B.PREUSSNER DRAWN: B.SEARLE PROJECT NO. 021052 SPEC CODE	OU 7-10 GLOVEBOX EXCAVATOR METHOD PROJECT PGS / FFS / WES / RCS EXCAVATOR PLAN AND SECTIONS
DESIGN PHASE: CONCEPTUAL	FOR REVIEW/APPROVAL SIGNATURES SEE DAR NO 87799	SIZE D · CAGE CODE 01MF3 · INDEX CODE NUMBER AREA 098 · TYPE 0671 · CL 00 · ORIG 090 · DWG- 519638 · REV A
SAFETY CATEGORY: SEE GENERAL NOTES	EFFECTIVE DATE:	SCALE: NOTED · SHEET A-8

File: 519638.dwg
Path: K:\Jobs\PIT9\GEM_2002\excavator\Detail\Detail\Layout Name: Layout1 ID: SEA

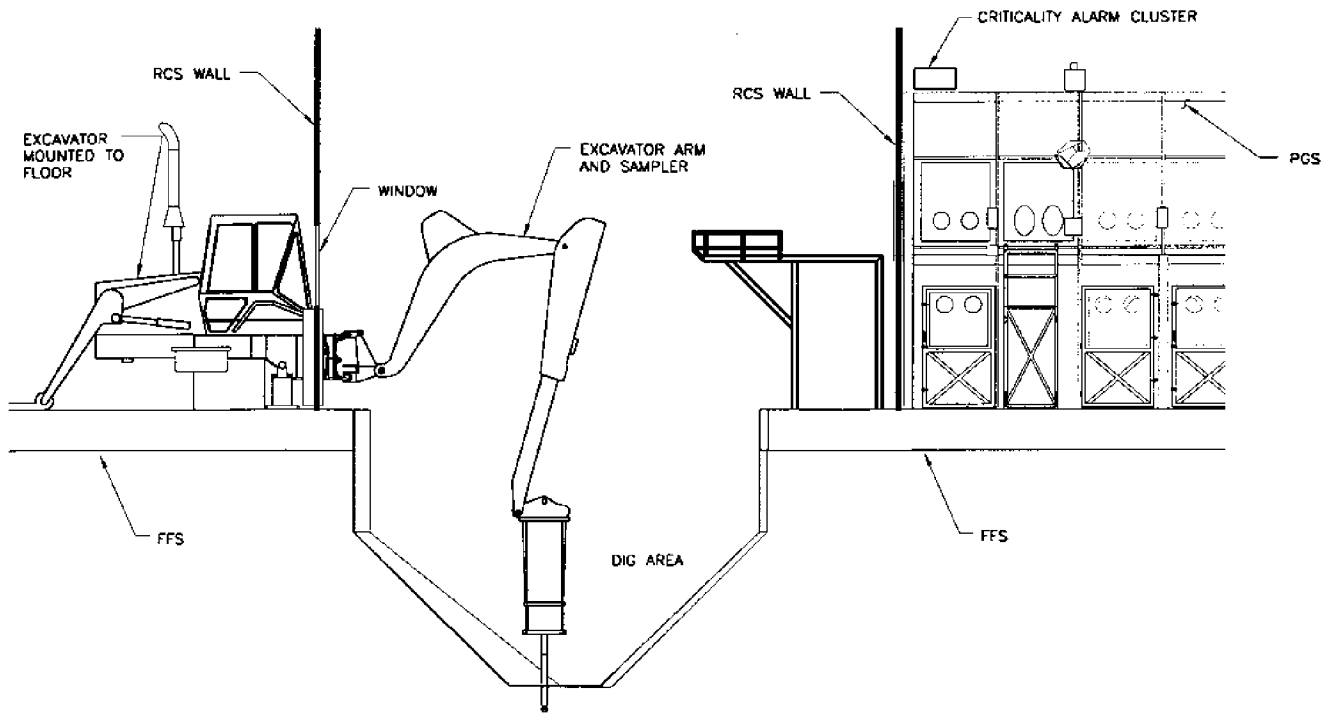

SECTION G
SCALE: 1/4"=1'-0"

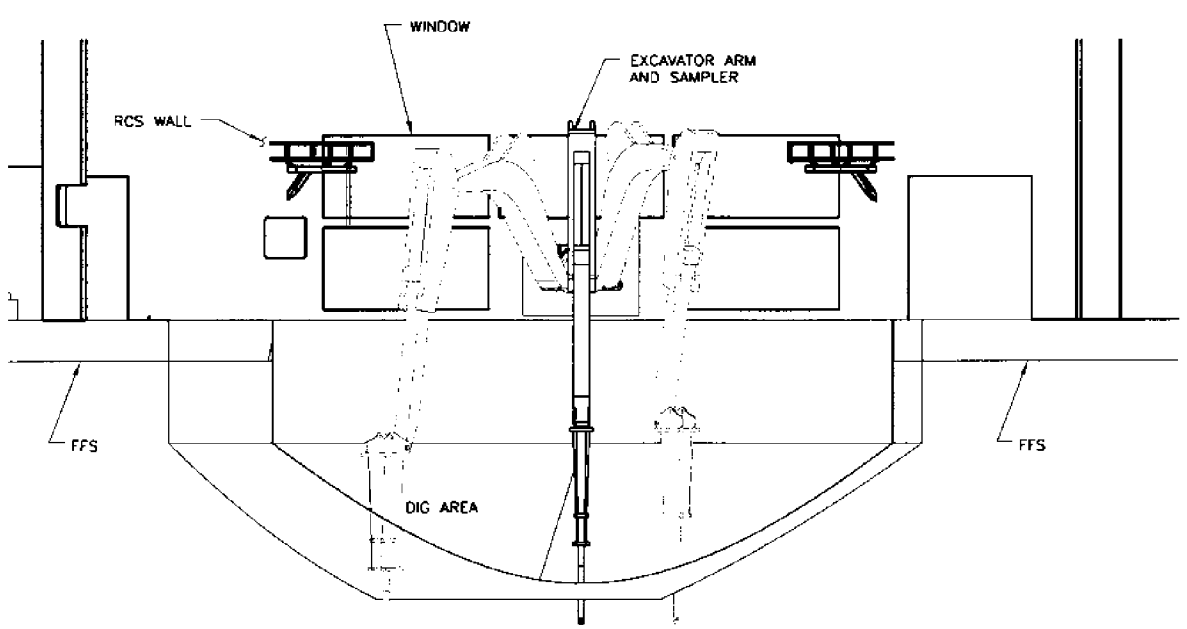

SECTION H
SCALE: 1/4"=1'-0"

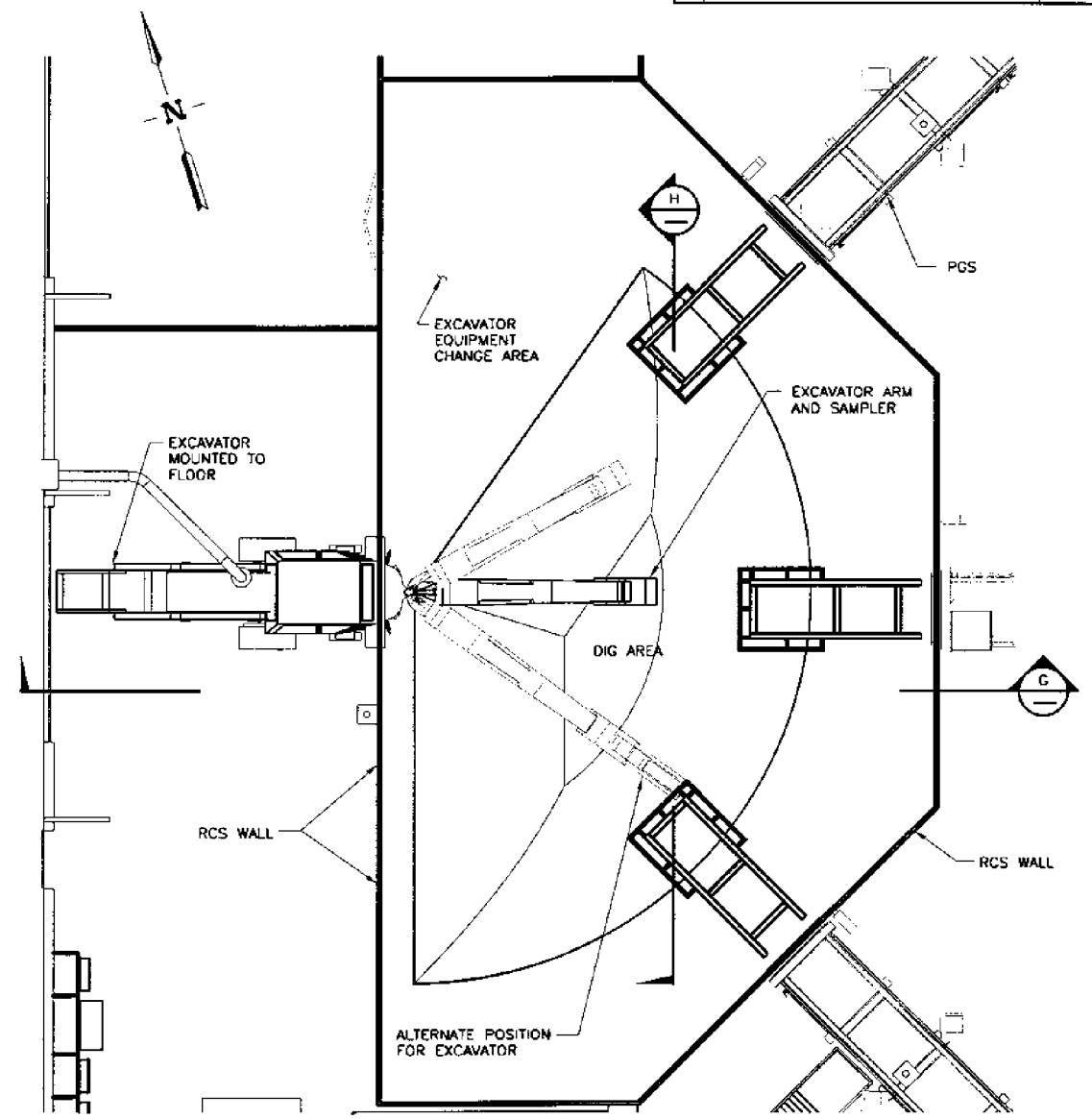

PLAN
SCALE: 1/4"=1'-0"

XREF DRAWINGS

519674-A.DWG
519676-A.DWG

RELEASED
FOR RECORD ONLY
DO NOT FABRICATE

FOR DRAWING INDEX SEE DRAWING NO 519620	SUBCONTRACT NO.	INEEL
SCALE: 1/4" = 1'-0"	REQUESTER: SA DAVIES DESIGN: B. PREUSSNER DRAWN: B.SEARLE PROJECT NO. 021052 SPEC CODE	OU 7-10 GLOVEBOX EXCAVATOR METHOD PROJECT PGS / FFS / WES / RCS SAMPLING PLAN AND SECTIONS
DESIGN PHASE CONCEPTUAL	FOR REVIEW/APPROVAL SIGNATURES SEE DWG NO 87799	SIZE D · CAGE CODE 01MF3 · INDEX CODE NUMBER AREA 098 TYPE 0671 CL 00 ORIG 090 · DWG-519639 · REV A
SAFETY CATEGORY SEE GENERAL NOTES	EFFECTIVE DATE	SCALE NOTED · SHEET A-9

REVISIONS

REV	DESCRIPTION	EFFECTIVE DATE

File: 519639.dwg
Path: K:\obe\PIT9\GEM_2002\excavator\tracedwg\13/01 - 4:24 P.M.
Layout Name: Layout1
ID: SEA

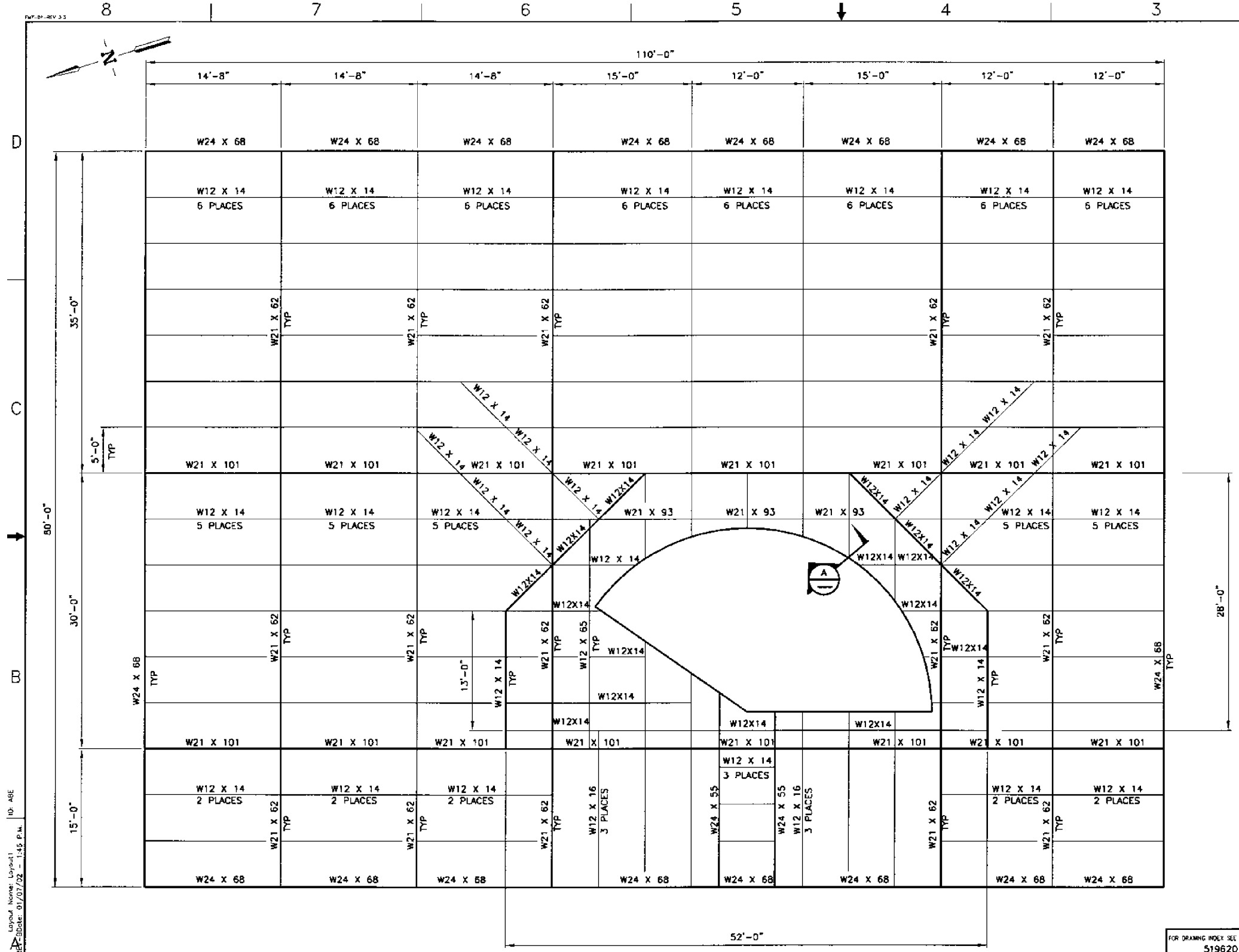

FLOOR FRAMING PLAN
SCALE: 3/16"=1'-0"

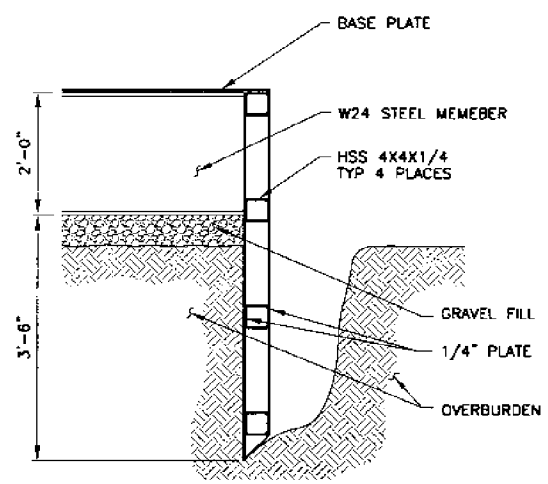

SECTION A
SCALE: 3/4"=1'-0"

RELEASED
FOR RECORD ONLY
DO NOT FABRICATE

REVISIONS		
REV	DESCRIPTION	EFFECTIVE DATE
B	SEE DAR # -	

FOR DRAWING INDEX SEE DRAWING NO. 519620

SCALE: 3/16" = 1'-0"

DESIGN PHASE: CONCEPTUAL

SAFETY CATEGORY: SEE GENERAL NOTES

SUBCONTRACT NO.

REQUESTER: SA DAVIES
DESIGN: S. JENSEN
DRAWN: B.SEARLE
PROJECT NO. 021052
SPEC CODE
FOR REVIEW/APPROVAL SIGNATURES SEE DAR NO. 87799
EFFECTIVE DATE

INEEL
Idaho National Engineering & Environmental Laboratory
BECHTEL BWXT IDAHO, LLC

OU 7-10
GLOVEBOX EXCAVATOR METHOD PROJECT
FFS

FLOOR FRAMING PLAN

SIZE	CAGE CODE	INDEX CODE NUMBER AREA	TYPE	CL	ORIG	DWG-	REV
D	01MF3	098	0671	60	090	519640	B

SCALE: NOTED
SHEET S-1

File: 519640-B.dwg
Path: P:\INEEL-EXT-01-01512-REV-B
Date: 01/07/02 - 1:45 P.M.
Layout Name: Layout1
ID: ABE

REVISIONS		
REV	DESCRIPTION	EFFECTIVE DATE

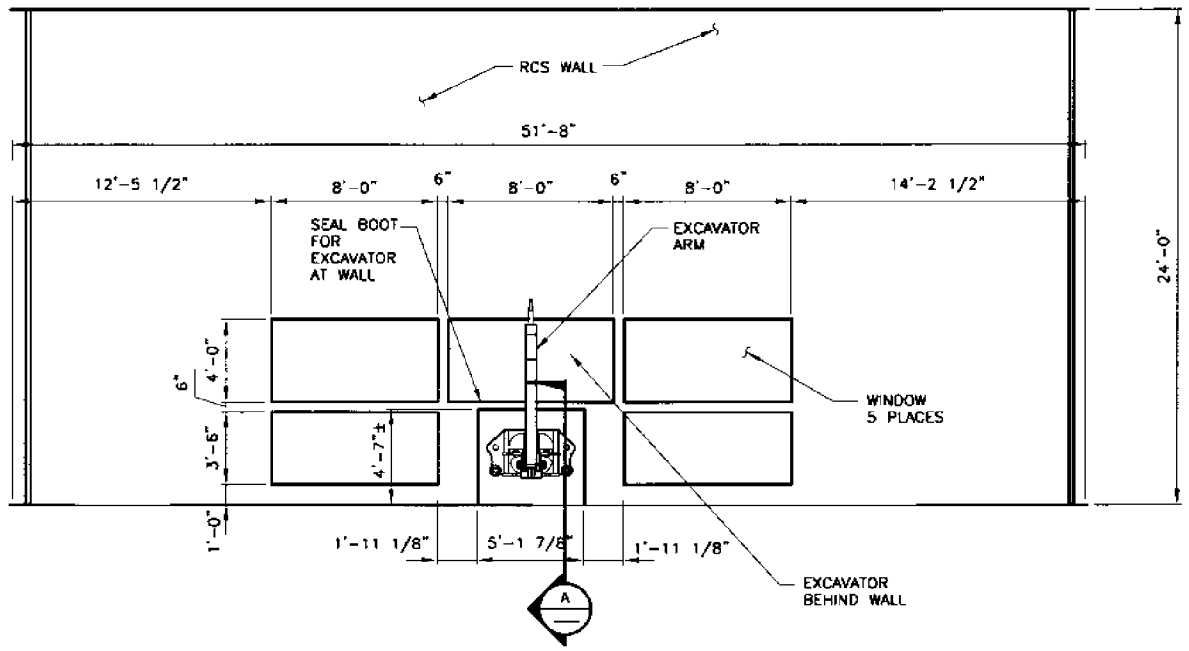

(LOOKING OUT)
FRONT WINDOW ELEVATION
SCALE: 1/4"=1'-0"

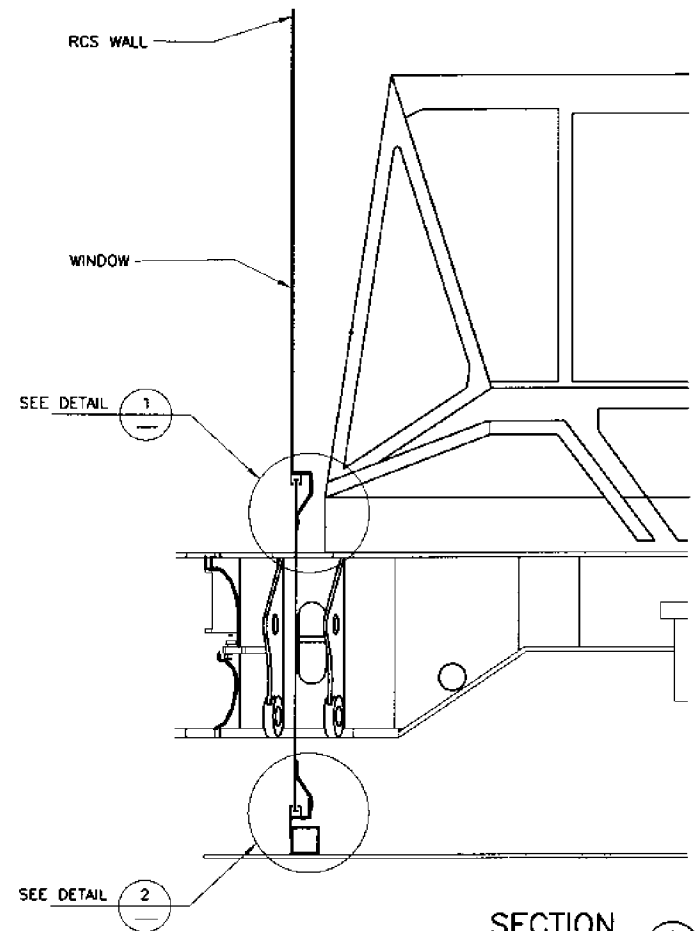

SECTION A
SCALE: 1"=1'-0"

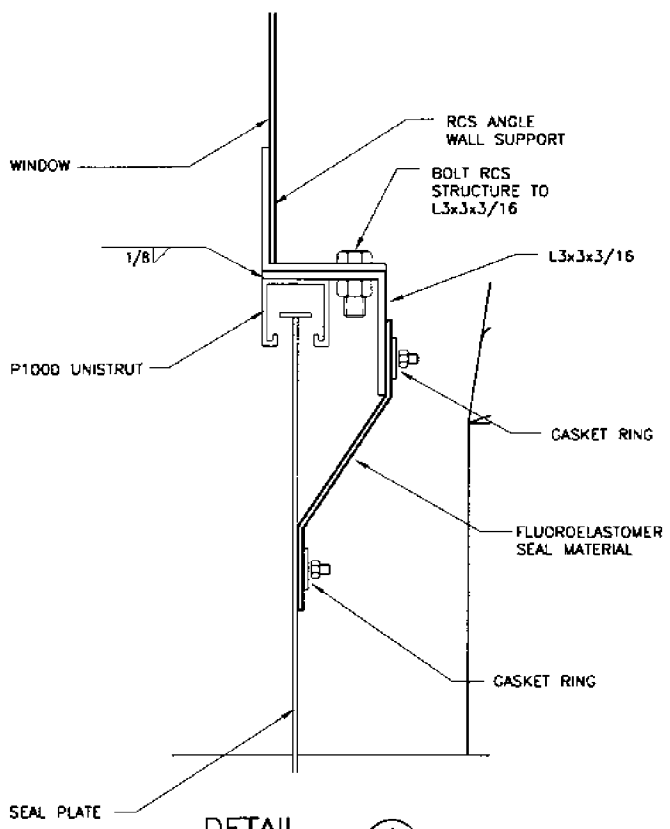

DETAIL 1
SCALE: 6"=1'-0"

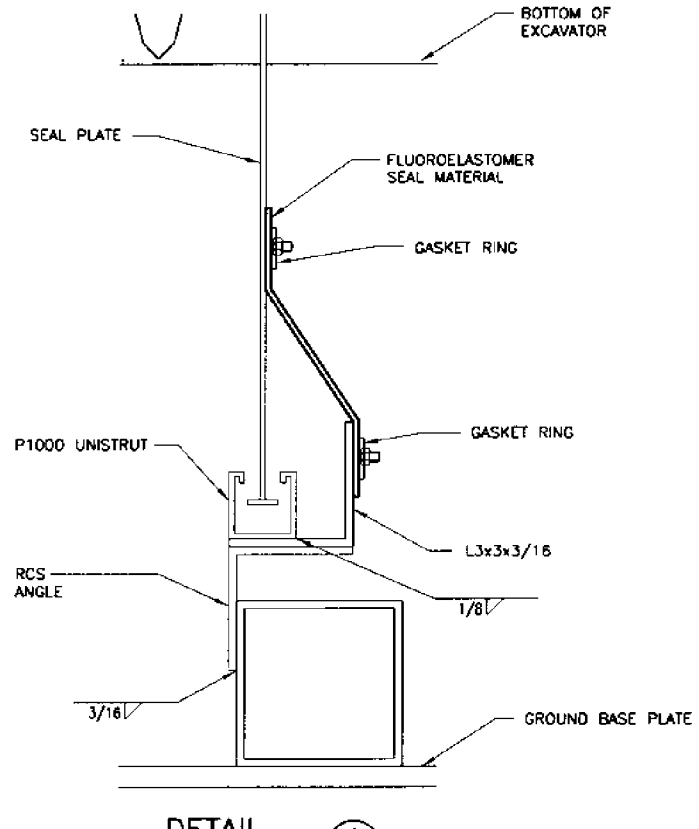

DETAIL 2
SCALE: 6"=1'-0"

RELEASED
FOR RECORD ONLY
DO NOT FABRICATE

FOR DRAWING INDEX SEE DRAWING NO. 519620	SUBCONTRACT NO	INEEL
SCALE 1" = 1'-0"	REQUESTER: SA DAVIES	OU 7-10 GLOVEBOX EXCAVATOR METHOD PROJECT FFS / WES / RCS
	DESIGN: PREUSSNER/GROVER	
	DRAWN: B SEARLE	
SCALE 1/4" = 1'-0"	PROJECT NO: 021052	EXCAVATOR SEAL ELEVATION AND DETAILS
	SPEC CODE	
DESIGN PHASE: CONCEPTUAL	FOR REVIEW/APPROVAL SIGNATURES SEE DAR NO 87799	SIZE D · CADD CODE 01MF3 · INDEX CODE NUMBER AREA 098 · TYPE 0671 · CO 60 · SEQ 090 · DWG-519641 · REV A
SAFETY CATEGORY: SEI CODEN NOTES	EFFECTIVE DATE:	SCALE: NOTED · SHEET S-2

Layout Name: Layout1 © SEA
Plot: 1/31/01 - 1:40 P.M.
File: 519641.dwg
Path: K:\DWG\FIG\GEA_2002\excdbx\excdbx

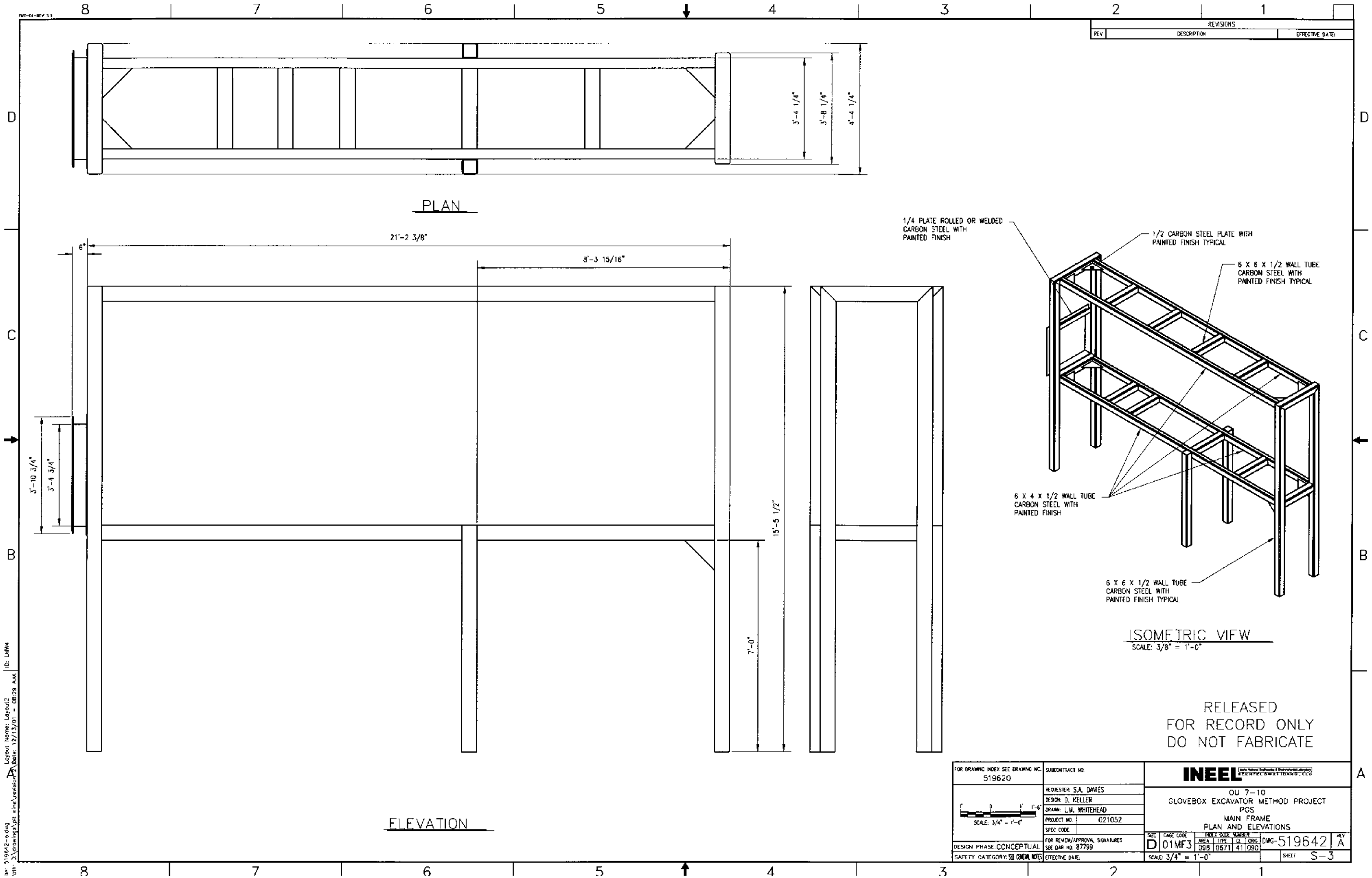

RELEASED
FOR RECORD ONLY
DO NOT FABRICATE

REVISIONS		
REV	DESCRIPTION	EFFECTIVE DATE:

FOR DRAWING INDEX SEE DRAWING NO. 519620

SCALE: 3/4" = 1'-0"

DESIGN PHASE: CONCEPTUAL

SAFETY CATEGORY: SEE CONTROL NOTES

SUBCONTRACT NO.

REQUESTER: S.A. DAVIES
DESIGN: D. KELLER
DRAWN: L.M. WHITEHEAD
PROJECT NO. 021052
SPEC CODE
FOR REVIEW/APPROVAL SIGNATURES SEE DAR NO. 87799
EFFECTIVE DATE:

INEEL

OU 7-10
GLOVEBOX EXCAVATOR METHOD PROJECT
PGS
MAIN FRAME
PLAN AND ELEVATIONS

SIZE	CAGE CODE	INDEX CODE NUMBER AREA	TYPE	QL	ORIG	DWG-519642	REV
D	01MF3	098	0671	41	090		A

SCALE: 3/4" = 1'-0"

SHEET S-3

File: 519642-o.dwg
Path: D:\drawings\pit nine\revision 2\Date: 12/13/01 - 08:29 A.M.
Layout Name: Layout2
ID: LMW4

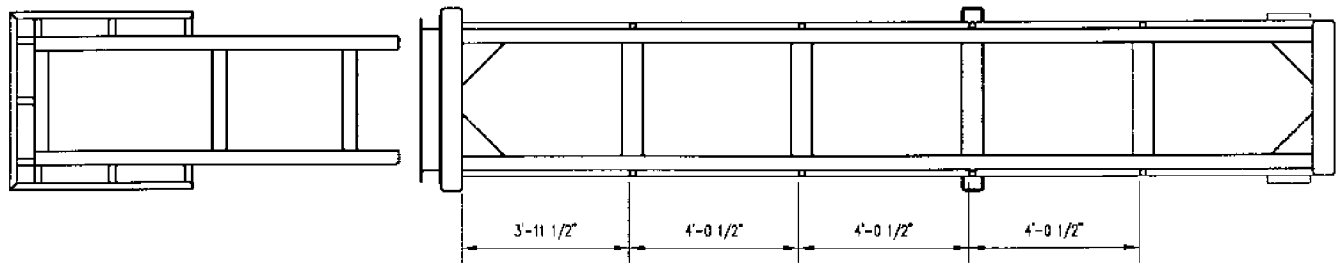

PLAN

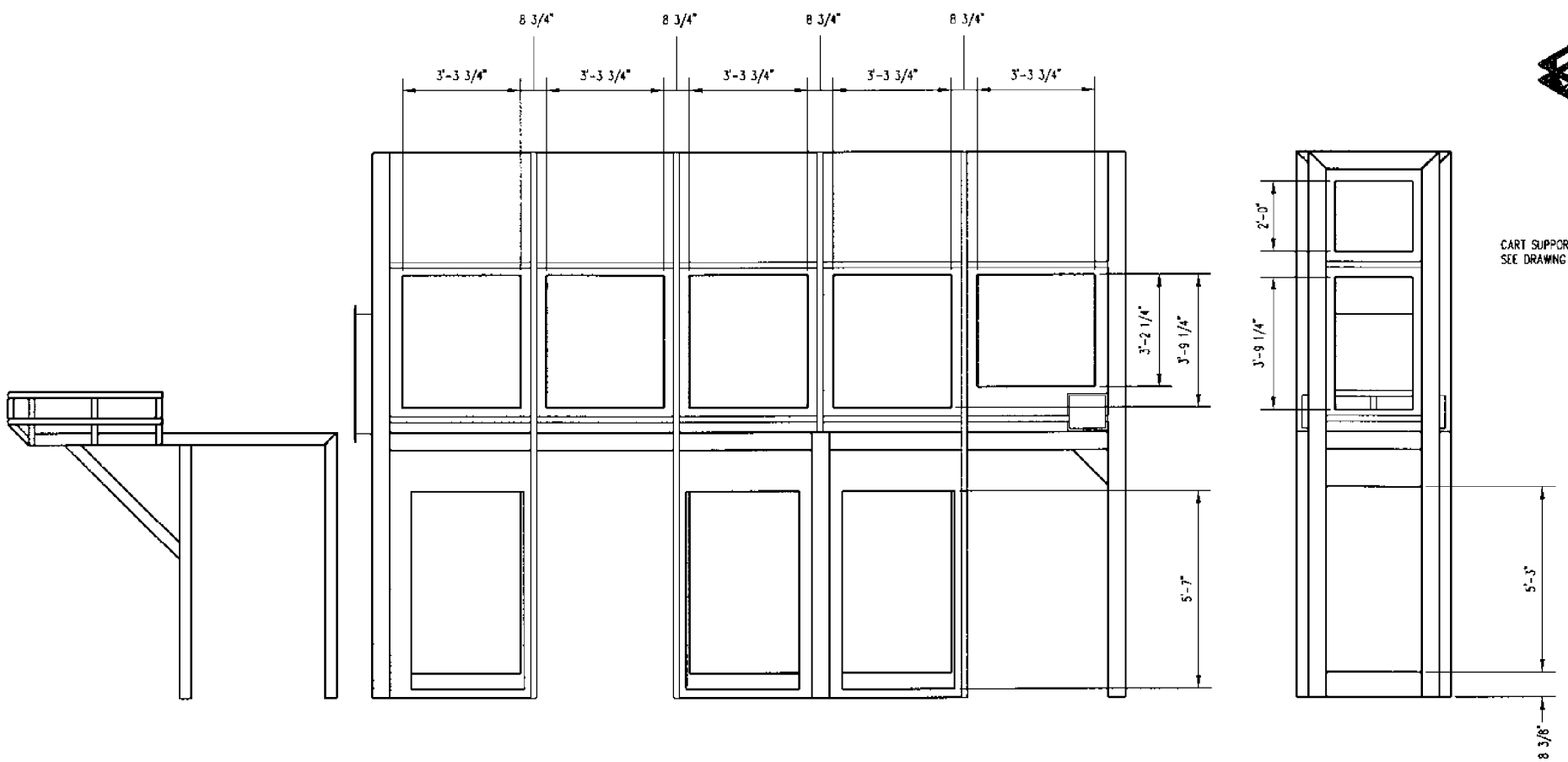

ELEVATION

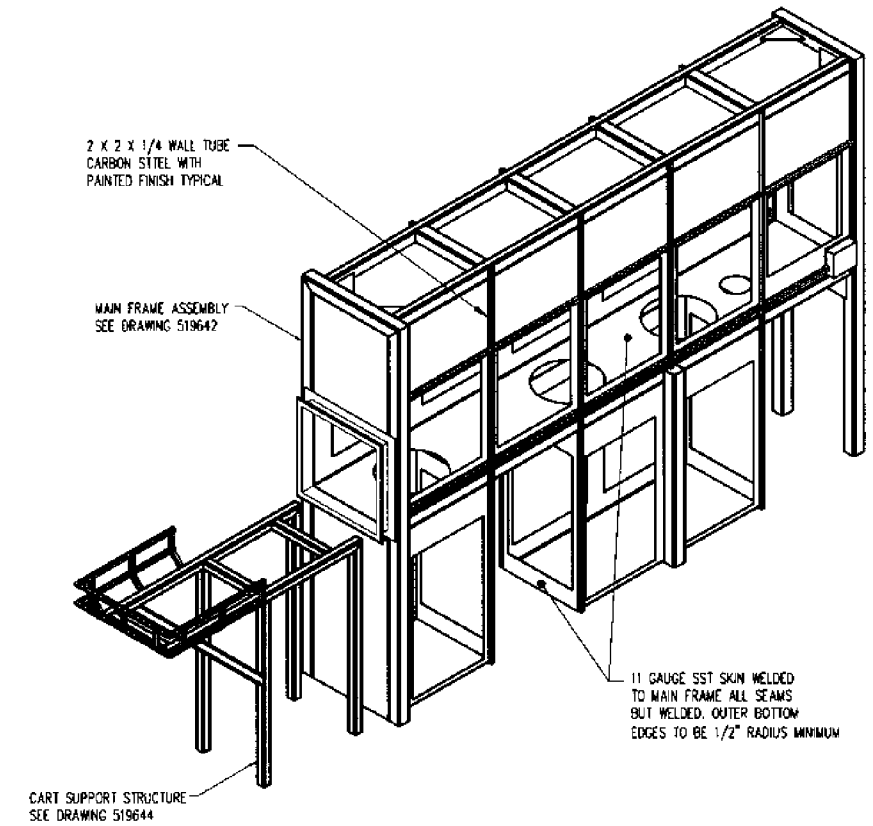

ISOMETRIC VIEW
SCALE: 3/8" = 1'-0"

RELEASED
FOR RECORD ONLY
DO NOT FABRICATE

REV	DESCRIPTION	EFFECTIVE DATE

FOR DRAWING INDEX SEE DRAWING NO. 519620	SUBCONTRACT NO.	INEEL
SCALE: 3/8" = 1'-0"	REQUESTER: S.A. DAVIES	OU 7-10 GLOVEBOX EXCAVATION METHOD PROJECT PGS MAIN FRAME ASSEMBLY ISOMETRIC AND ELEVATIONS
	DESIGN: D. KELLER	
	DRAWN: L.M. WHITEHEAD	
	PROJECT NO. 021052	
	SPEC CODE	
DESIGN PHASE: CONCEPTUAL	FOR REVIEW/APPROVAL SIGNATURES SEE DWR NO. 87799	SIZE D · CAGE CODE 01MF3 · INDEX CODE NUMBER AREA 098 TYPE 0671 CL 41 ORIG 090 · DWG-519643 · REV A
SAFETY CATEGORY: SEE GENERAL NOTES	EFFECTIVE DATE:	SCALE: NOTED · SHEET S-4

REVISIONS		
REV	DESCRIPTION	EFFECTIVE DATE:

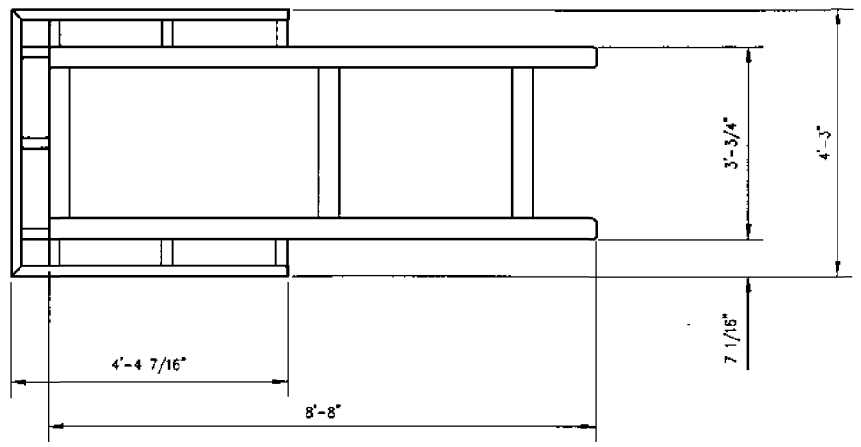

PLAN

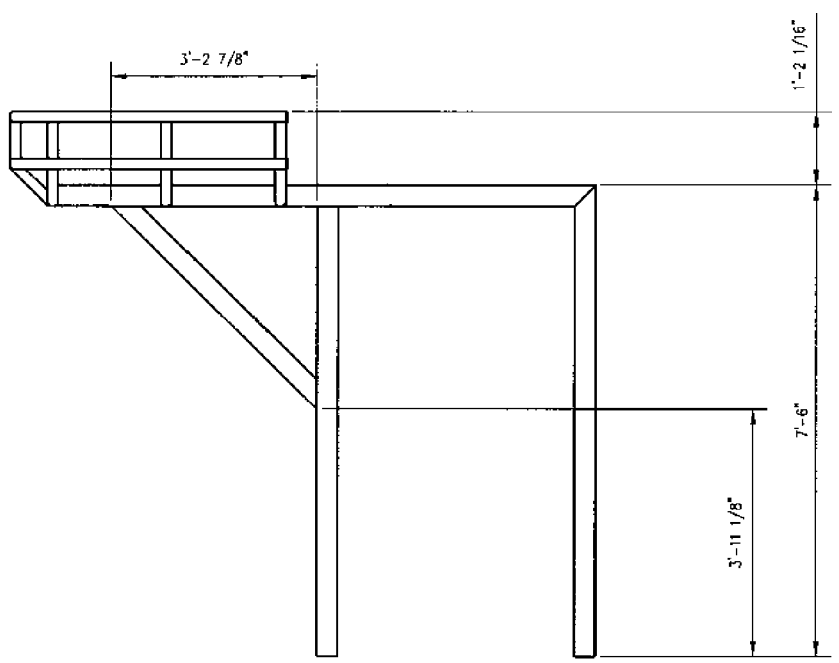

ELEVATION

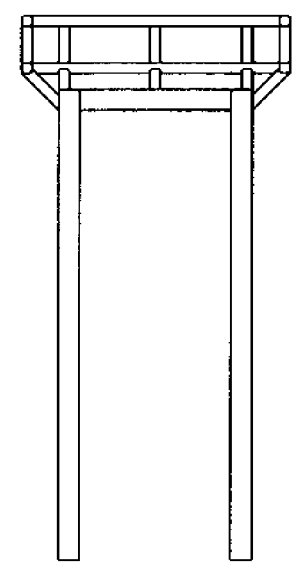

ELEVATION

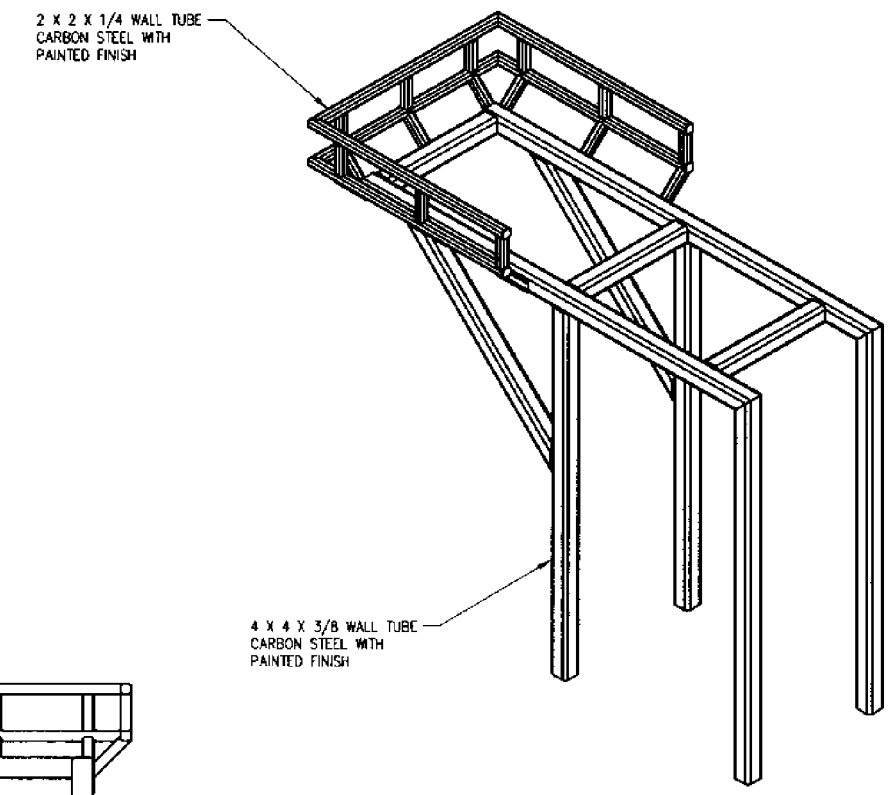

ISOMETRIC VIEW

RELEASED
FOR RECORD ONLY
DO NOT FABRICATE

FOR DRAWING INDEX SEE DRAWING NO. 519620	SUBCONTRACT NO	INEEL BECHTEL BWXT IDAHO, LLC
SCALE: 3/4" = 1'-0"	REQUESTER: S.A. DAVIES	OU 7-10 GLOVEBOX EXCAVATOR METHOD PROJECT PGS CART SUPPORT STRUCTURE PLAN AND ELEVATIONS
	DESIGN: D. KELLER	
	DRAWN: L.M. WHITEHEAD	
	PROJECT NO. 021052	
	SPEC CODE	
DESIGN PHASE: CONCEPTUAL	FOR REVIEW/APPROVAL SIGNATURES SEE DAR NO. 87799	SIZE D · CAGE CODE 01MF3 · INDEX CODE NUMBER AREA 098 TYPE 0671 Q 411 DISC 090 · DWG-519644 · REV A
SAFETY CATEGORY: SEE GENERAL NOTES	EFFECTIVE DATE:	SCALE: 3/4" = 1'-0" · SHEET S-5

File: 519644-a.dwg
Path: D:\Drawings\pit nine\revision\
Date: 12/13/01 - 08:36 A.M.
Layout Name: Layout
ID: LMWW

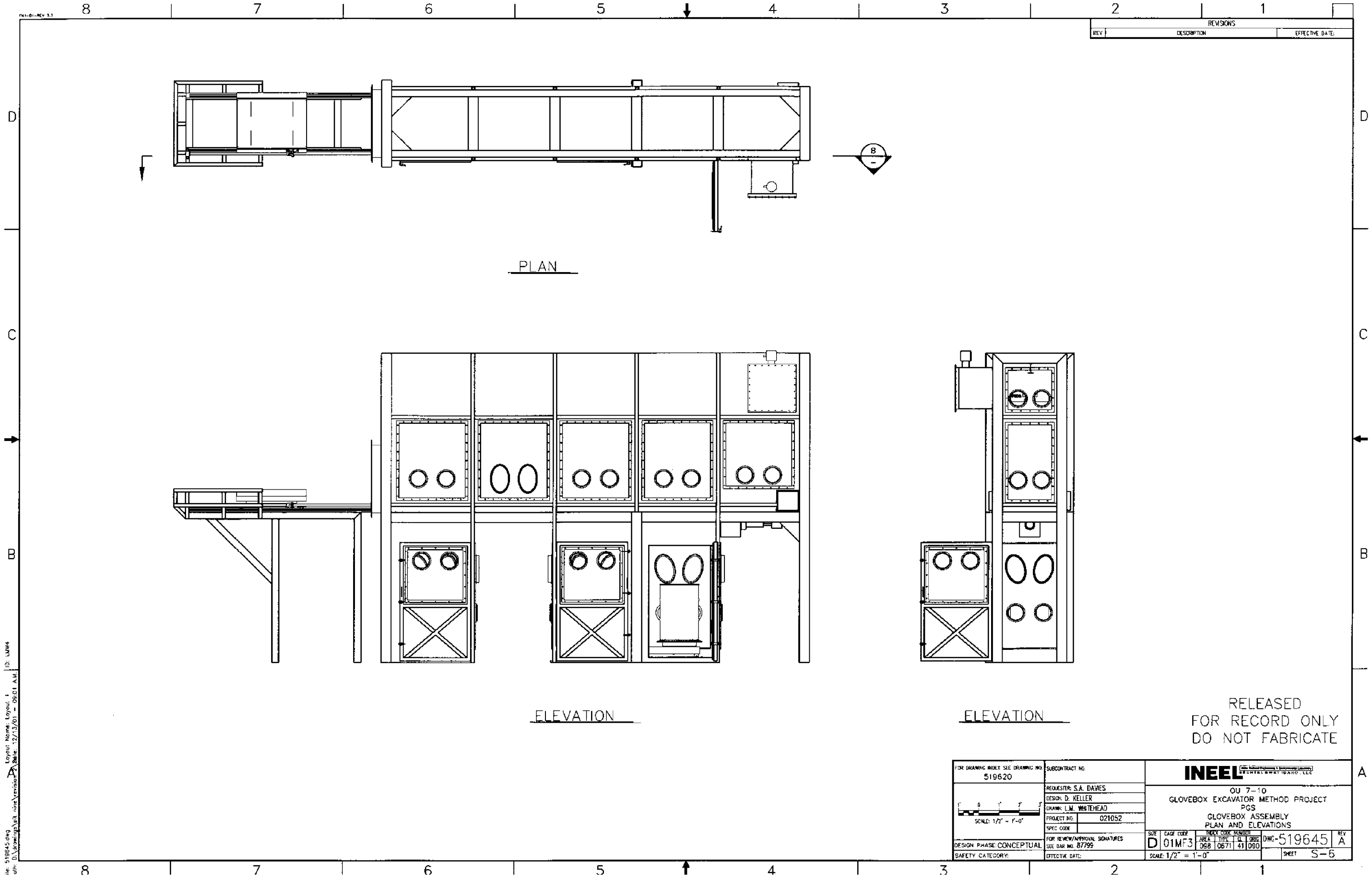

RELEASED
FOR RECORD ONLY
DO NOT FABRICATE

REVISIONS		
REV	DESCRIPTION	EFFECTIVE DATE:

FOR DRAWING INDEX SEE DRAWING NO. 519620

SCALE: 1/2" = 1'-0"

DESIGN PHASE: CONCEPTUAL

SAFETY CATEGORY:

SUBCONTRACT NO.

REQUESTER: S.A. DAVIES
DESIGN: D. KELLER
DRAWN: L.M. WHITEHEAD
PROJECT NO. 021052
SPEC CODE
FOR REVIEW/APPROVAL SIGNATURES SEE DAR NO. 87799
EFFECTIVE DATE:

INEEL
Idaho National Engineering & Environmental Laboratory
BECHTEL BWXT IDAHO, LLC

OU 7-10
GLOVEBOX EXCAVATOR METHOD PROJECT
PGS
GLOVEBOX ASSEMBLY
PLAN AND ELEVATIONS

SIZE	CAGE CODE	INDEX CODE NUMBER AREA	TYPE	CL	ORG	DWG-519645	REV
D	01MF3	098	0671	41	090		A

SCALE: 1/2" = 1'-0"

SHEET S-6

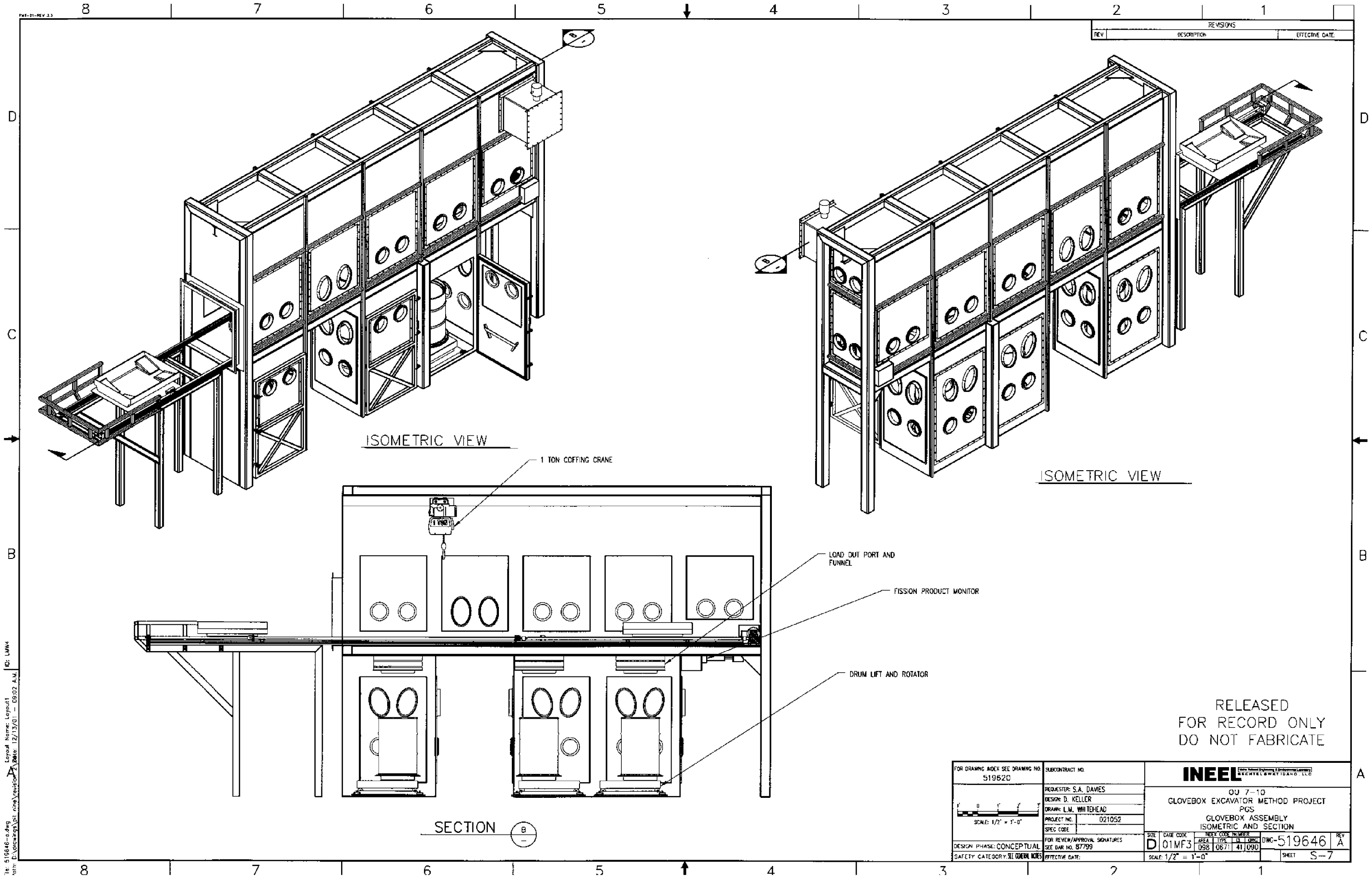

RELEASED
FOR RECORD ONLY
DO NOT FABRICATE

REVISIONS		
REV	DESCRIPTION	EFFECTIVE DATE

FOR DRAWING INDEX SEE DRAWING NO. 519620

SCALE: 1/2" = 1'-0"

DESIGN PHASE: CONCEPTUAL

SAFETY CATEGORY: SEE GENERAL NOTES

SUBCONTRACT NO.

REQUESTER: S.A. DAVIES
DESIGN: D. KELLER
DRAWN: L.M. WHITEHEAD
PROJECT NO. 021052
SPEC CODE
FOR REVIEW/APPROVAL SIGNATURES SEE DAR NO. 87799
EFFECTIVE DATE:

INEEL
Idaho National Engineering & Environmental Laboratory
BECHTEL BWXT IDAHO, LLC

OU 7-10
GLOVEBOX EXCAVATOR METHOD PROJECT
PGS
GLOVEBOX ASSEMBLY
ISOMETRIC AND SECTION

SIZE	CAGE CODE	INDEX CODE NUMBER AREA	TYPE	CL	DWG	DWG-519646	REV
D	01MF3	098	0671	41	090		A

SCALE: 1/2" = 1'-0"

SHEET S-7

File: 519646-a.dwg
Path: D:\drawings\pit nine\revision 2\
Layout Name: Layout1
Date: 12/13/01 - 09:02 A.M.
ID: LMW4

REVISIONS		
REV	DESCRIPTION	EFFECTIVE DATE:

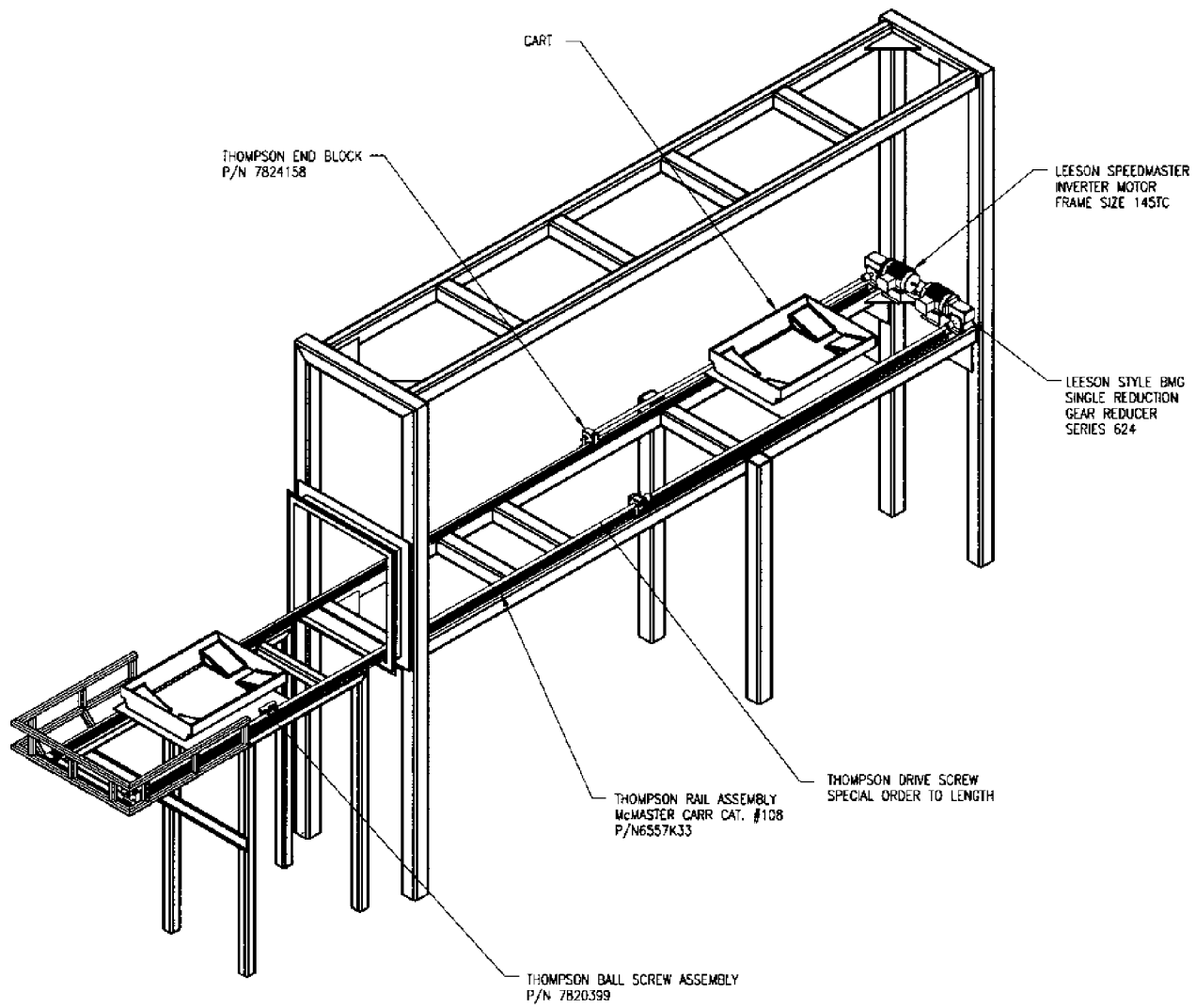

ISOMETRIC VIEW

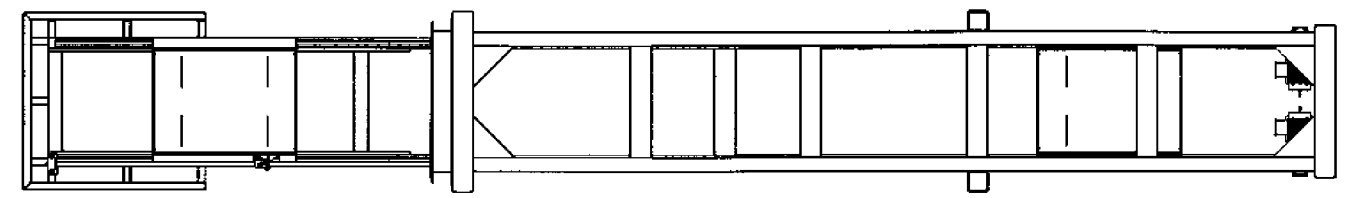

PLAN

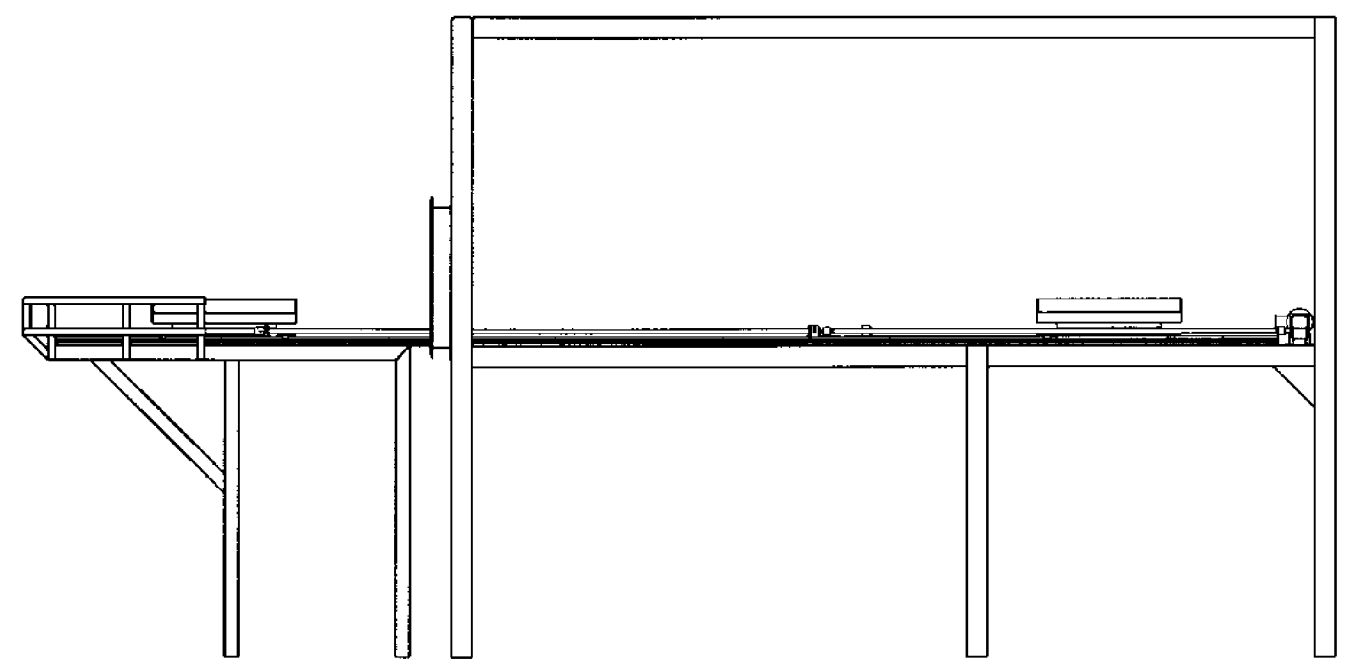

ELEVATION

RELEASED
FOR RECORD ONLY
DO NOT FABRICATE

FOR DRAWING INDEX SEE DRAWING NO. 519620	SUBCONTRACT NO.	INEEL BATTELLE ENERGY ALLIANCE, LLC
SCALE: 1/2" = 1'-0"	REQUESTER: S.A. DAVIES DESIGN: D. KELLER DRAWN: L.M. WHITEHEAD PROJECT NO. 021052 SPEC CODE	OU 7-10 GLOVEBOX EXCAVATOR METHOD PROJECT PGS GLOVEBOX CART SYSTEM ISOMETRIC VIEW, PLAN, AND ELEVATION
DESIGN PHASE: CONCEPTUAL	FOR REVIEW/APPROVAL SIGNATURES SEE DAR NO. 87799	SIZE D · CADE CODE 01MF3 · INDEX CODE NUMBER AREA 098 TYPE 0671 CL 41 DISC 090 · DWG-519647 · REV A
SAFETY CATEGORY: SEE OTHER NOTES	EFFECTIVE DATE:	SCALE: 1/2" = 1'-0" · SHEET S-8

File: 519647-a.dwg
Path: D:\Drawings\PR_mine\Revision\ Layout Name: Layout1 Date: 12/13/01 - 08:03 A.M. ID: LMW4

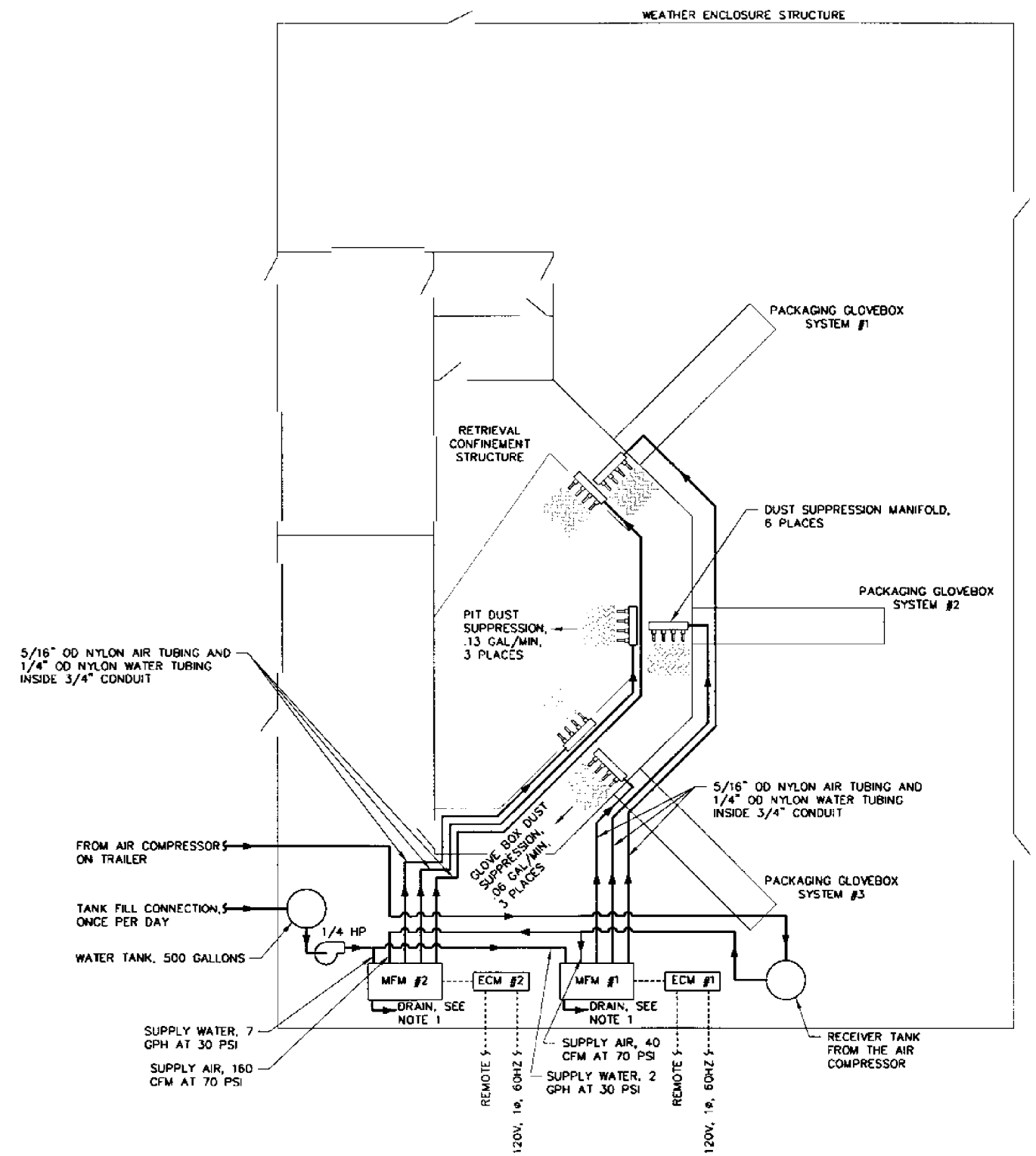

DUST SUPPRESION FLOW DIAGRAM

SEQUENCE OF OPERATION

ELECTRICAL CONTROL MODULE: SHALL HAVE CONTROL SWITCHES FOR EACH CONTROL CIRCUIT, STATUS LIGHTS FOR POWER FOR EACH CIRCUIT, STATUS LIGHTS FOR LOW AIR AND WATER PRESSURE AND SYSTEM SHALL HAVE THE CAPABILITY TO BE REMOTELY OPERATED.

MUILITI-FUNCTION MODULE: SHALL HAVE SOLENOID VALVES TO REGULATE AND CONTROL THE FLOW OF WATER AND AIR TO INDIVIDUAL FOGGER MANIFOLDS. AT THE END OF EACH CYCLE A TIMER SWITCHES THE SOLENOID VALVES SO THAT ONLY AIR FLOWS THRU THE LINES TO PURGE THE STAGNANT WATER. SHALL BE CAPABLE OF ENERGIZING OR DENERGIZING DUST SUPPRESSION AT EACH TREATMENT POINT OR GROUP OF TREATMENT POINTS.

NOTES

1. DRAIN FROM THE MUILTI-FUNCTION MODULE SHALL BE ROUTED TO THE 500 GALLON WATER TANK.

RELEASED FOR RECORD ONLY

DO NOT FABRICATE

REVISIONS		
REV	DESCRIPTION	EFFECTIVE DATE

FOR DRAWING INDEX SEE DRAWING NO 519620	SUBCONTRACT NO	INEEL
NO SCALE	REQUESTER: SA DAVIES	OU 7-10 GLOVEBOX EXCAVATOR METHOD PROJECT WES / RCS / FFS
	DESIGN: RM VAN VOAST	
	DRAWN: TB UMPHLETTE	
	PROJECT NO 021052	DUST SUPPRESION FLOW DIAGRAM
	SPEC CODE	
DESIGN PHASE CONCEPTUAL	FOR REVIEW/APPROVAL SIGNATURES SEE DAR NO. 87799	SIZE D · CAGE CODE 01MF3 · INDEX CODE NUMBER AREA 098 TYPE 0671 QL 52 ORIG 090 · DWG- 519648 · REV A
SAFETY CATEGORY SEE GENERAL NOTES	EFFECTIVE DATE	SCALE: NONE · SHEET P-1

File: 519648-A.dwg ID: UMPHTB Layout Name: Layout1
Path: B:\abe\PIT9\GEM_2002\pip-1 Date: 12/13/01 - 4:10 P.M.

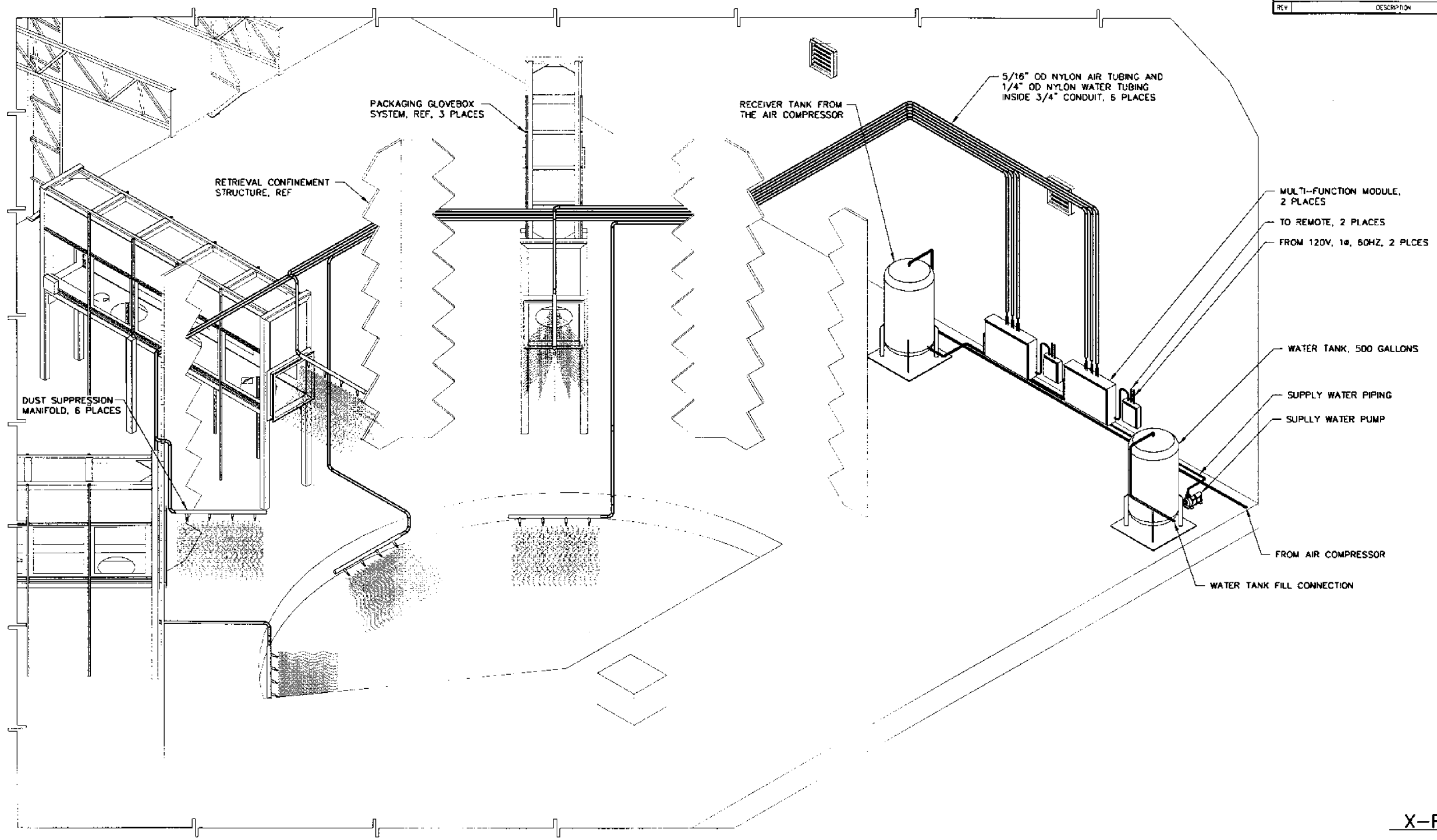

DUST SUPPRESION SYSTEM ISOMETRIC

LOOKING SOUTH EAST

X-REF DRAWING

519674-A.dwg
519676-A.dwg
519677-A.dwg

RELEASED FOR RECORD ONLY

DO NOT FABRICATE

REVISIONS		
REV	DESCRIPTION	EFFECTIVE DATE

FOR DRAWING INDEX SEE DRAWING NO 519620	SUBCONTRACT NO	INEEL
NO SCALE	REQUESTER: SA DAVIES DESIGN: RM VAN VOAST DRAWN: TB UMPHLETTE PROJECT NO: 021050 SPEC CODE:	OU 7-10 GLOVEBOX EXCAVATOR METHOD PROJECT WES / RCS / FFS
DESIGN PHASE: CONCEPTUAL	FOR REVIEW/APPROVAL SIGNATURES SEE DAR NO 87799	DUST SUPPRESSION SYSTEM ISOMETRIC
SAFETY CATEGORY: SEE DESIGN DWGS	EFFECTIVE DATE:	SIZE D · CASC CODE 01MF3 · INDEX CODE NUMBER AREA 098 TYPE 0671 SQ 52 DISC 090 · DWG 519649 · REV A · SCALE NONE · SHEET P-2

File: 519649-A.Dwg ID: UMPHLETB
Path: B:\DWG\PRA\CERCLA\2002\Drawing Date: 12/13/01 - 4:02 PM
copyright name (Layout):

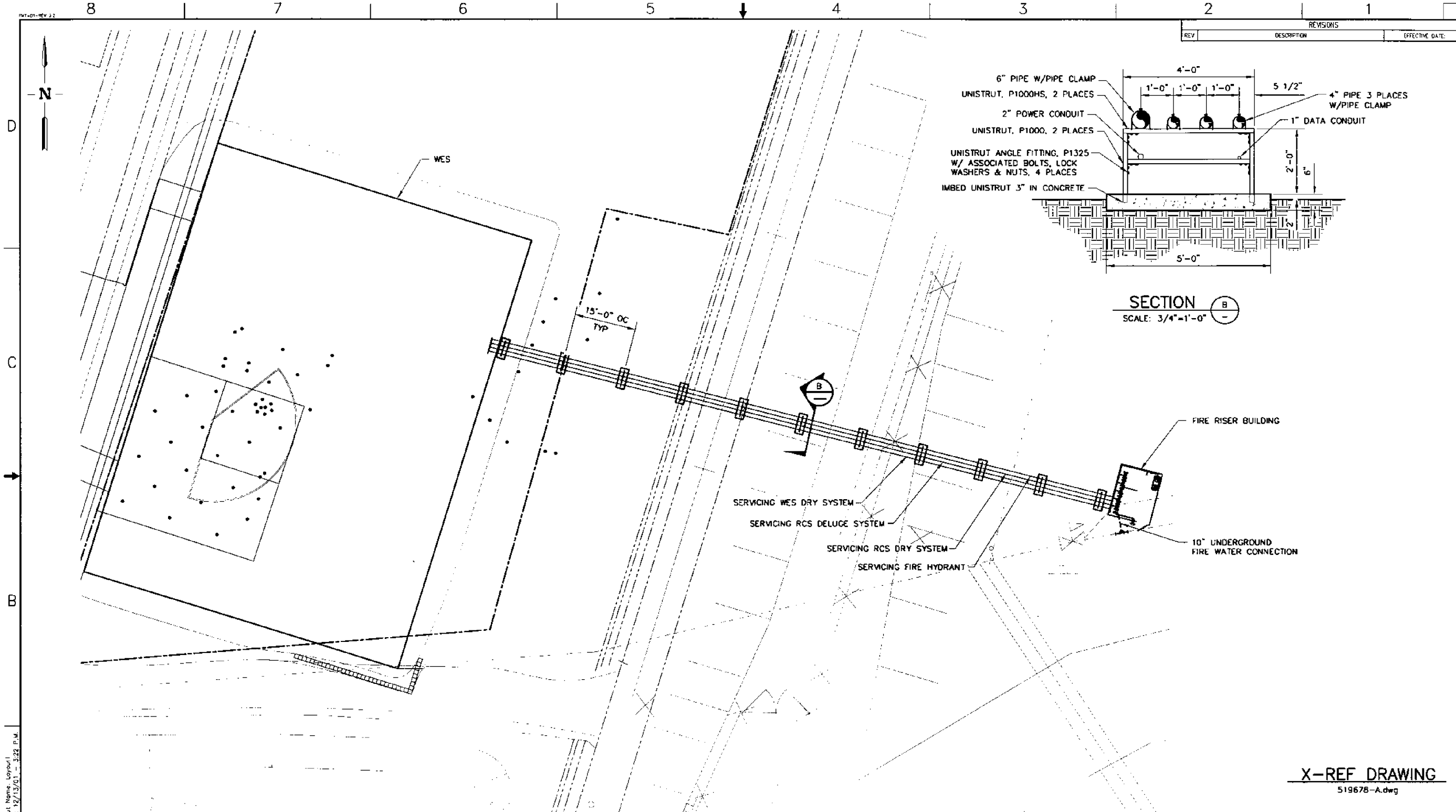

SECTION B
SCALE: 3/4"=1'-0"

X-REF DRAWING
519678-A.dwg

FIRE SUPPRESSION SYSTEMS PLOT PLAN
SCALE: 3/32"=1'-0"

RELEASED FOR RECORD ONLY

DO NOT FABRICATE

FOR DRAWING INDEX SEE DRAWING NO. 519620	SUBCONTRACT NO	INEEL
SCALE: 3/32" = 1'-0"	REQUESTER: SA DAVIES	OU 7-10 GLOVEBOX EXCAVATOR METHOD PROJECT
	DESIGN: J JENSEN	
	DRAWN: TB UMPHLETTE	
	PROJECT NO. 021052	FIRE SUPPRESSION SYSTEMS PLOT PLAN
	SPEC CODE	
DESIGN PHASE CONCEPTUAL	FOR REVIEW/APPROVAL SIGNATURES SEE DAR NO 87799	SIZE D · CAGE CODE 01MF3 · INDEX CODE NUMBER AREA 098 TYPE 0671 C. 52 ORIG 090 · DWG- 519650 · REV A
SAFETY CATEGORY SEE GENERAL NOTES	EFFECTIVE DATE	SCALE: NOTED · SHEET FP-1

REVISIONS

REV	DESCRIPTION	EFFECTIVE DATE:

File: 519650-A.dwg ID: UMPHTB Layout Name: Layout1
Path: D:\cad\PIT9\GEM_2002\fp Date: 12/13/01 - 3:22 P.M.

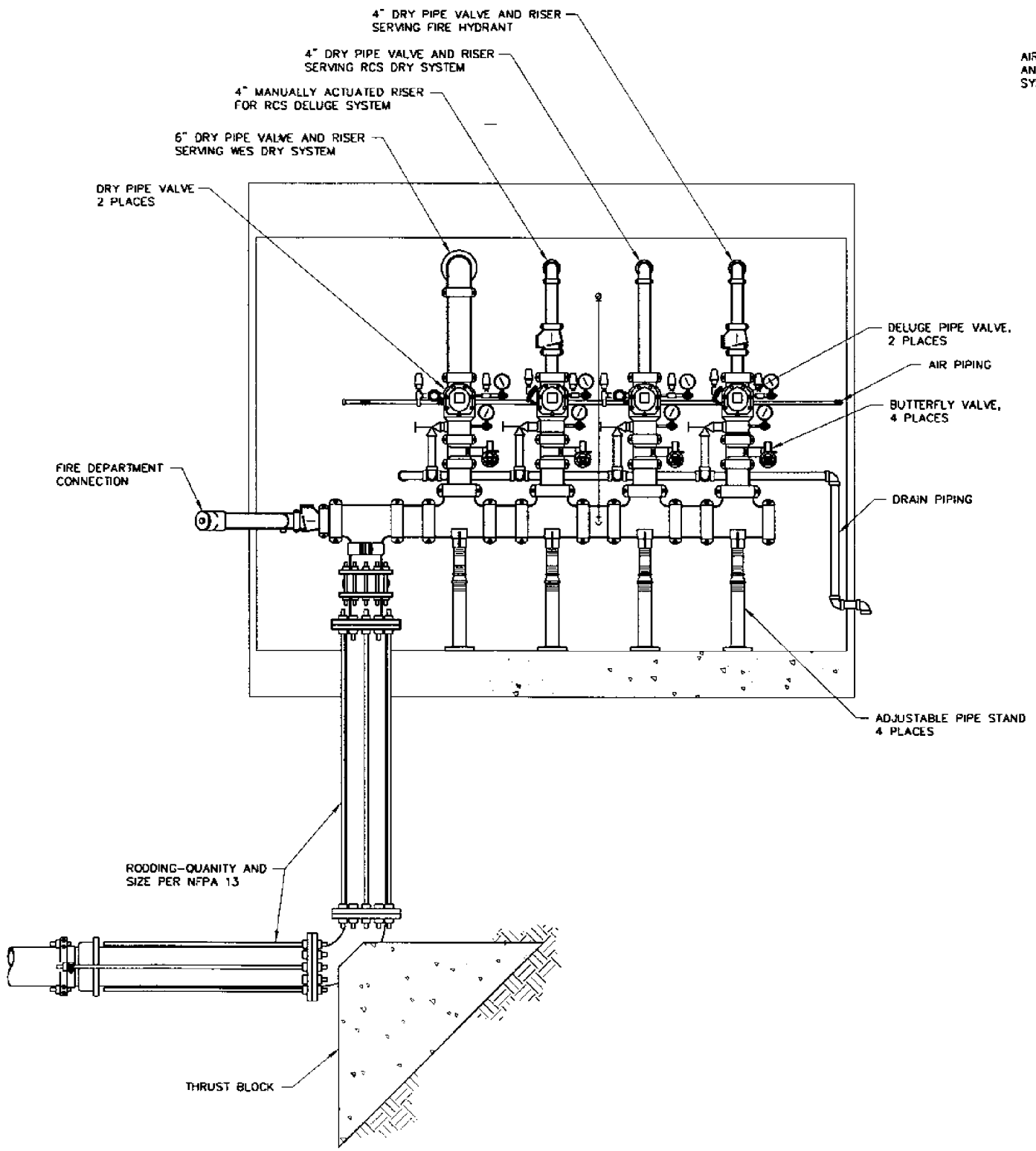

SECTION (A)
SCALE: 3/4"=1'-0"

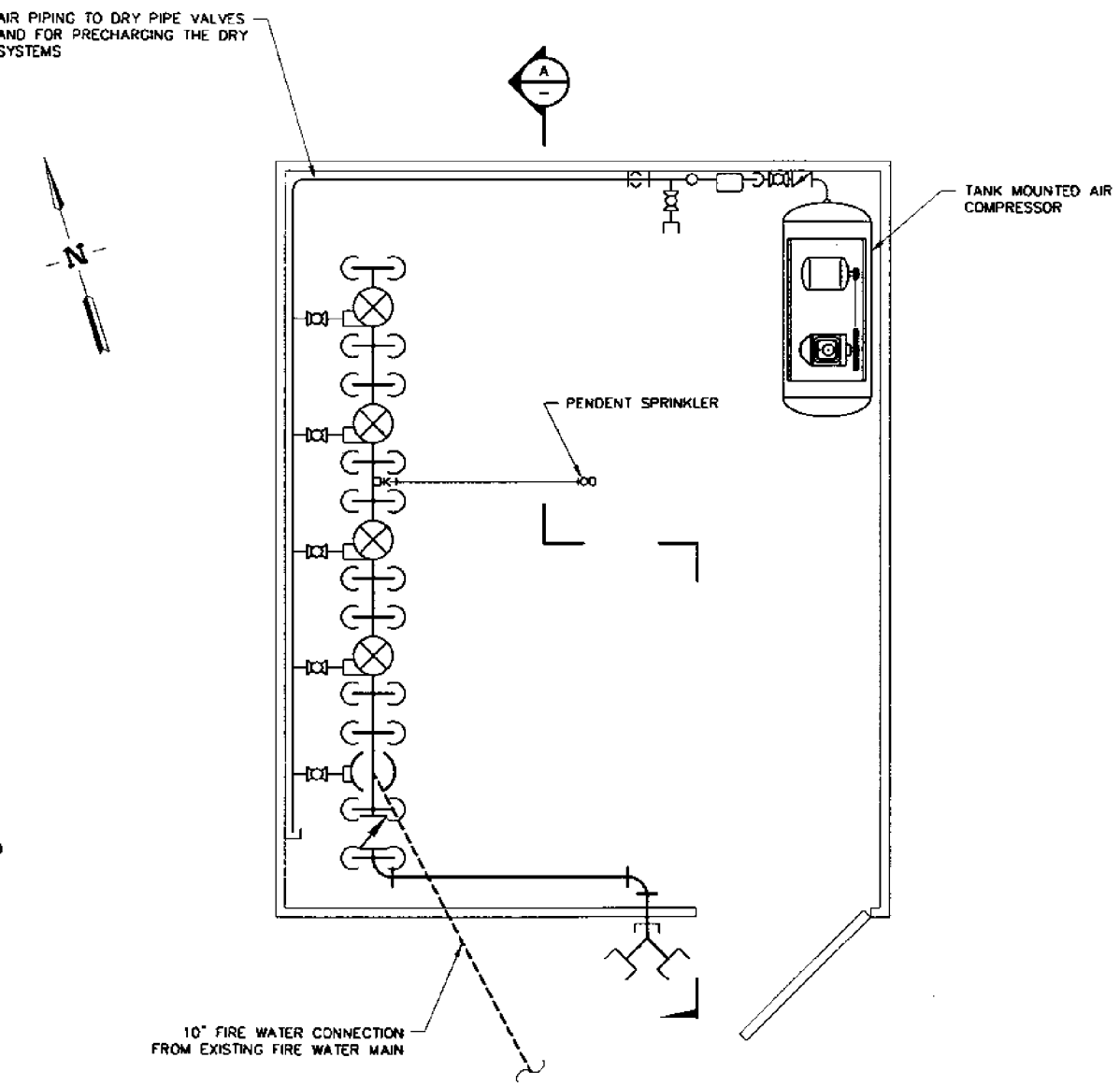

FLOOR PLAN
SCALE: 3/4"=1'-0"

RELEASED FOR RECORD ONLY

DO NOT FABRICATE

REVISIONS		
REV	DESCRIPTION	EFFECTIVE DATE

FOR DRAWING INDEX SEE DRAWING NO. 519620	SUBCONTRACT NO	INEEL
SCALE: 3/4" = 1'-0"	REQUESTER: SA DAVIES	OU 7-10 GLOVEBOX EXCAVATOR METHOD PROJECT
	DESIGN: J JENSEN	
	DRAWN: TB UMPHLETTE	
	PROJECT NO 021052	FIRE RISER BUILDING FLOOR PLAN AND SECTION
	SPEC CODE	
DESIGN PHASE: CONCEPTUAL	FOR REVIEW/APPROVAL SIGNATURES SEE DAR NO. 87799	SIZE D · CAGE CODE 01MF3 · INDEX CODE NUMBER: AREA 098, TYPE 0671, CL 52, ORG 090 · DWG-519651 · REV A
SAFETY CATEGORY: SEE GENERAL NOTES	EFFECTIVE DATE:	SCALE: 3/4"=1'-0" · SHEET FP-2

File: 519651-A.dwg ID: UMPHLB Layout Name: Layout1
Path: B:\dev\PI19\GEM_2002\fp Date: 12/13/01 - 3:22 P.M.

REVISIONS		
REV	DESCRIPTION	EFFECTIVE DATE

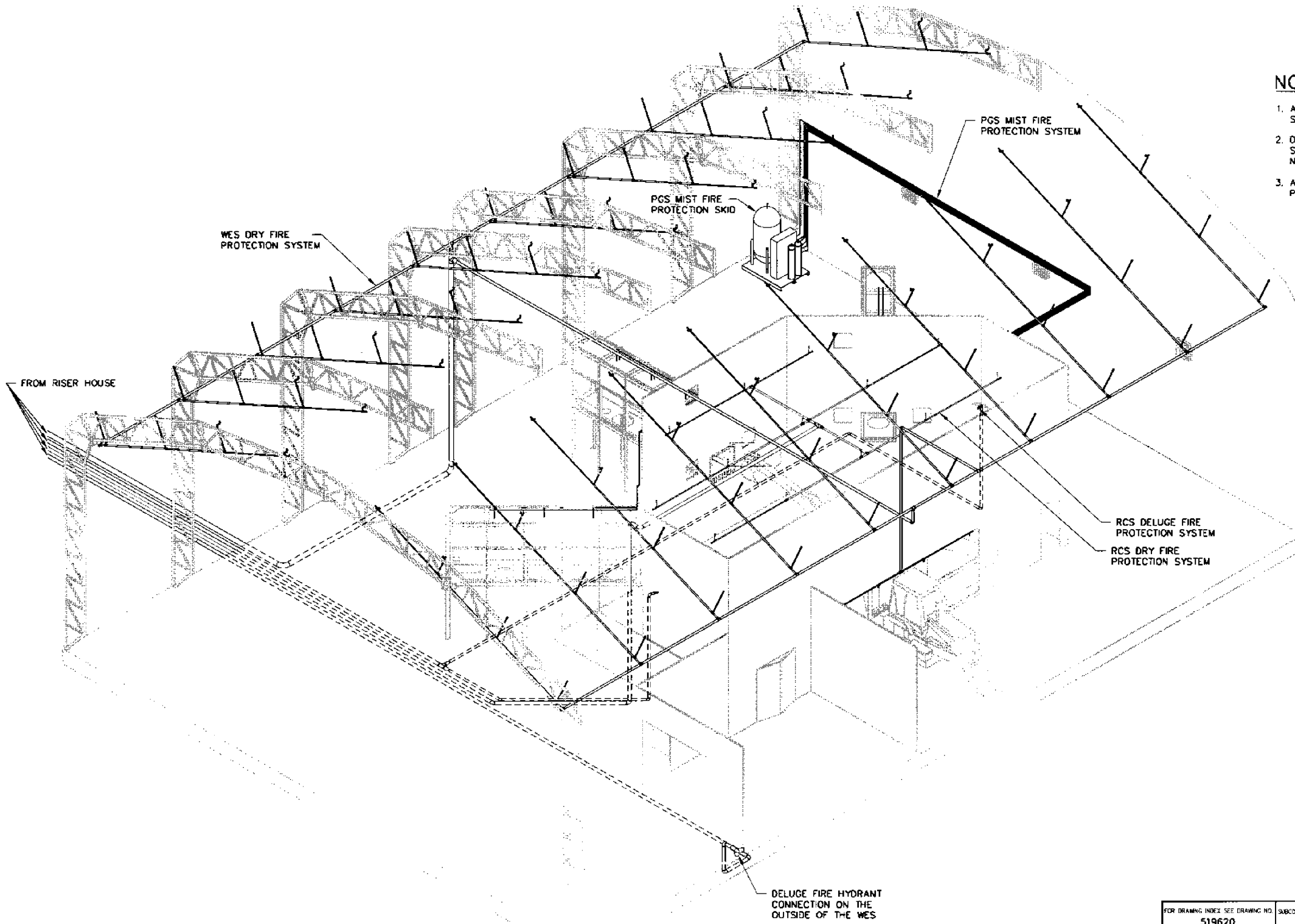

NOTES

1. ALL PIPING AND FITTINGS ARE GALVANIZED EXCEPT THE FIRE MIST SYSTEM WHICH SHALL BE STAINLESS STEEL TUBING.
2. DELUGE SYSTEM FOR THE RETRIEVAL CONFINEMENT STRUCTURE SHALL SHALL BE CLASSIFIED AS EXTRA HAZARD OCCUPANCY GROUP 1 PER NFPA. ALL OTHER AREAS SHALL BE ORDINARY HAZARD GROUP 2.
3. ALL PIPING OUTSIDE THE FIRE RISER BUILDING IS DRY, NO FREEZE PROTECTION WILL BE REQUIRED OUTSIDE THE FIRE RISER BUILDING.

X-REF DRAWING

519974.dwg
519677.dwg

FIRE PROTECTION ISOMETRIC

LOOKING SOUTHEAST

RELEASED FOR RECORD ONLY

DO NOT FABRICATE

FOR DRAWING INDEX SEE DRAWING NO. 519620	SUBCONTRACT NO	INEEL
NO SCALE	REQUESTER: SA DAVIES DESIGN: J JENSEN DRAWN: TB UMPHLETTE PROJECT NO 021052 SPEC CODE	OU 7-10 GLOVEBOX EXCAVATOR METHOD PROJECT WES / RCS / PGS FACILITY ISOMETRIC
DESIGN PHASE: CONCEPTUAL	FOR REVIEW/APPROVAL SIGNATURES SEE DWR NO 87799	SIZE D · CAGE CODE 01MF3 · INDEX CODE NUMBER AREA 098 DRS 0671 CL 52 DISC 090 · DWG- 519652 · REV A
SAFETY CATEGORY: SEE CONTROL NOTES	EFFECTIVE DATE:	SCALE: NONE · SHEET FP-3

File: 519652-A.dwg ID: UMPHTB Layout: home (Layout1)
Path: B:\data\PROJECTS\2002\Ip Date: 12/13/01 3:31 P.M.

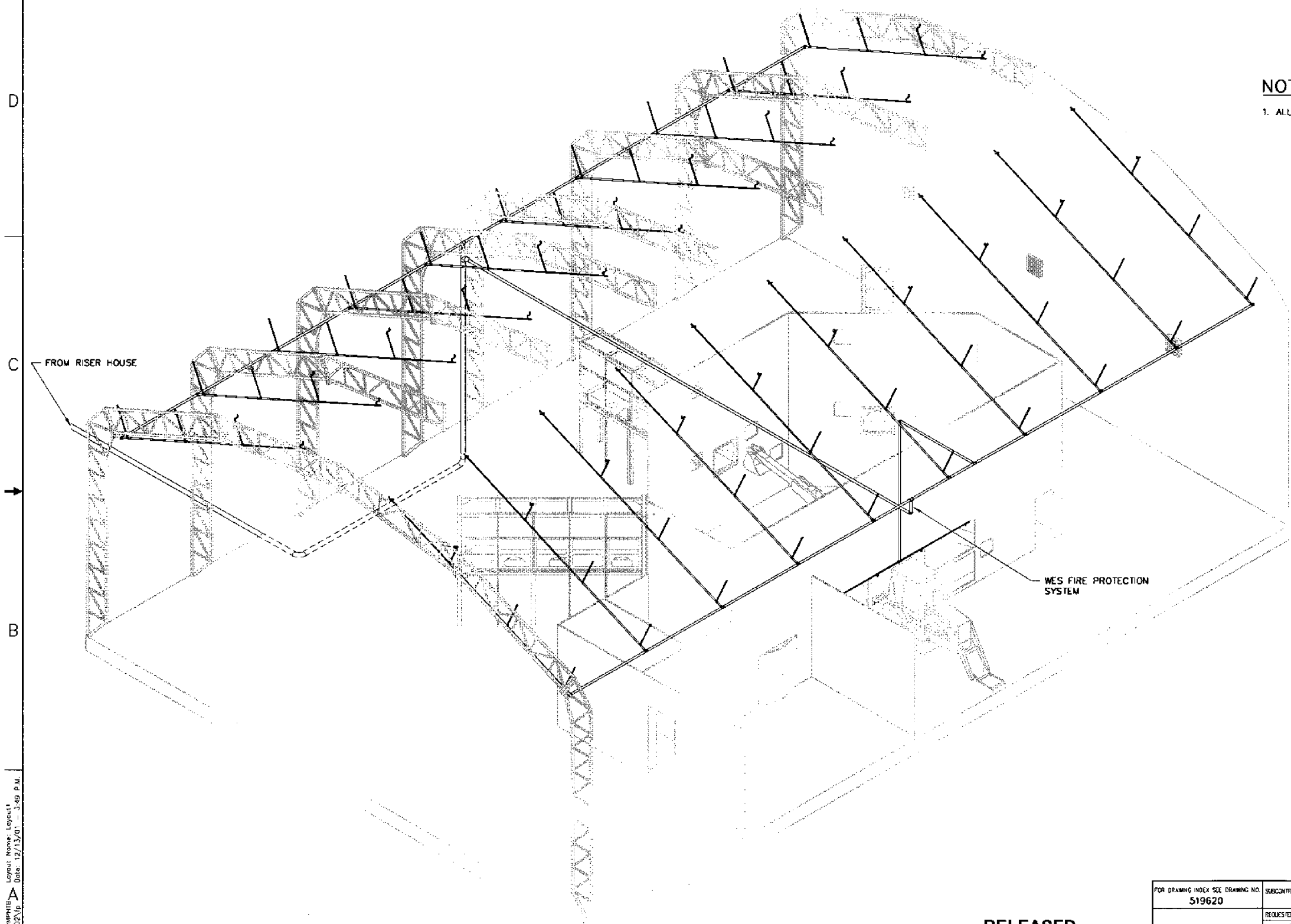

WES FIRE PROTECTION ISOMETRIC

LOOKING SOUTHEAST

NOTES

1. ALL PIPING AND FITTINGS ARE GALVANIZED.

X-REF DRAWING

519974.dwg
519675.dwg
519677.dwg

RELEASED FOR RECORD ONLY

DO NOT FABRICATE

FOR DRAWING INDEX SEE DRAWING NO. 519620	SUBCONTRACT NO.	INEEL
NO SCALE	REQUESTER: SA DAVIES	OU 7-10 CLOVEBOX EXCAVATOR METHOD PROJECT WES
	DESIGN: J JENSEN	
	DRAWN: TB UMPHLETTE	WES ISOMETRIC
	PROJECT NO. 021052	
	SPEC CODE	
DESIGN PHASE: CONCEPTUAL	FOR REVIEW/APPROVAL SIGNATURES SEE DAR NO 87799	SIZE D · CAGE CODE 01MF3 · INDEX CODE NUMBER: AREA 098, TYPE 0671, CL 52, ORIG 090 · DWG- 519653 · REV A
SAFETY CATEGORY: SEE GENERAL NOTES	EFFECTIVE DATE:	SCALE: NONE · SHEET FP-4

File: 519653-A.dwg ID: UMPHTB Layout Name: Layout1
Path: B:\abs\PIT9\CEM_2002\fp Date: 12/13/01 - 3:49 P.M.

REVISIONS		
REV	DESCRIPTION	EFFECTIVE DATE

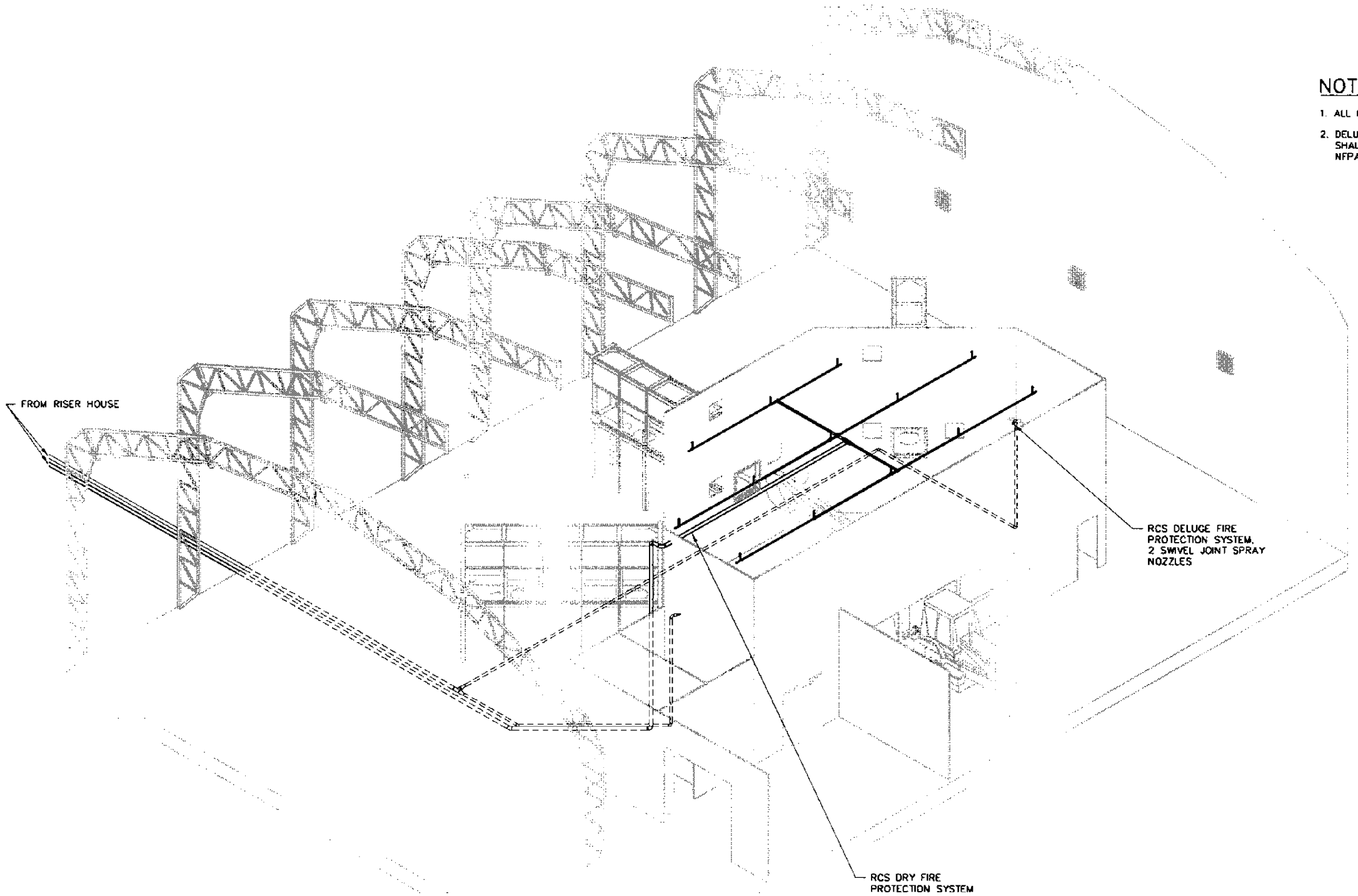

NOTES

1. ALL PIPING AND FITTINGS ARE GALVANIZED.
2. DELUGE SYSTEM FOR THE RETRIEVAL CONFINEMENT STRUCTURE SHALL SHALL BE CLASSIFIED AS EXTRA HAZARD OCCUPANCY GROUP 1 PER NFPA.

X-REF DRAWING

519974.dwg
519675.dwg
519677.dwg

RCS FIRE PROTECTION ISOMETRIC

LOOKING SOUTHEAST

RELEASED FOR RECORD ONLY

DO NOT FABRICATE

FOR DRAWING INDEX SEE DRAWING NO. 519620	SUBCONTRACT NO	INEEL
NO SCALE	REQUESTER: SA DAVIES	OU 7-10 GLOVEBOX EXCAVATOR METHOD PROJECT WES / RCS
	DESIGN: J JENSEN	
	DRAWN: TB UMPHLETTE	
	PROJECT NO 021052	RCS ISOMETRIC
	SPEC CODE	
DESIGN PHASE: CONCEPTUAL	FOR REVIEW/APPROVAL SIGNATURES SEE DAR NO. 87799	SIZE D · CAGE CODE 01MF3 · INDEX CODE NUMBER: AREA 098, TYPE 0671, CL 52, DWG 090 · DWG-519654 · REV A
SAFETY CATEGORY: SEE GENERAL NOTES	EFFECTIVE DATE:	SCALE: NONE · SHEET FP-5

File: 519654-A.dwg ID: UMPHTB Layout Name: Layout1
Path: B:\abe\PIT9\GEM_2002\fp Date: 12/13/01 - 3:53 P.M.

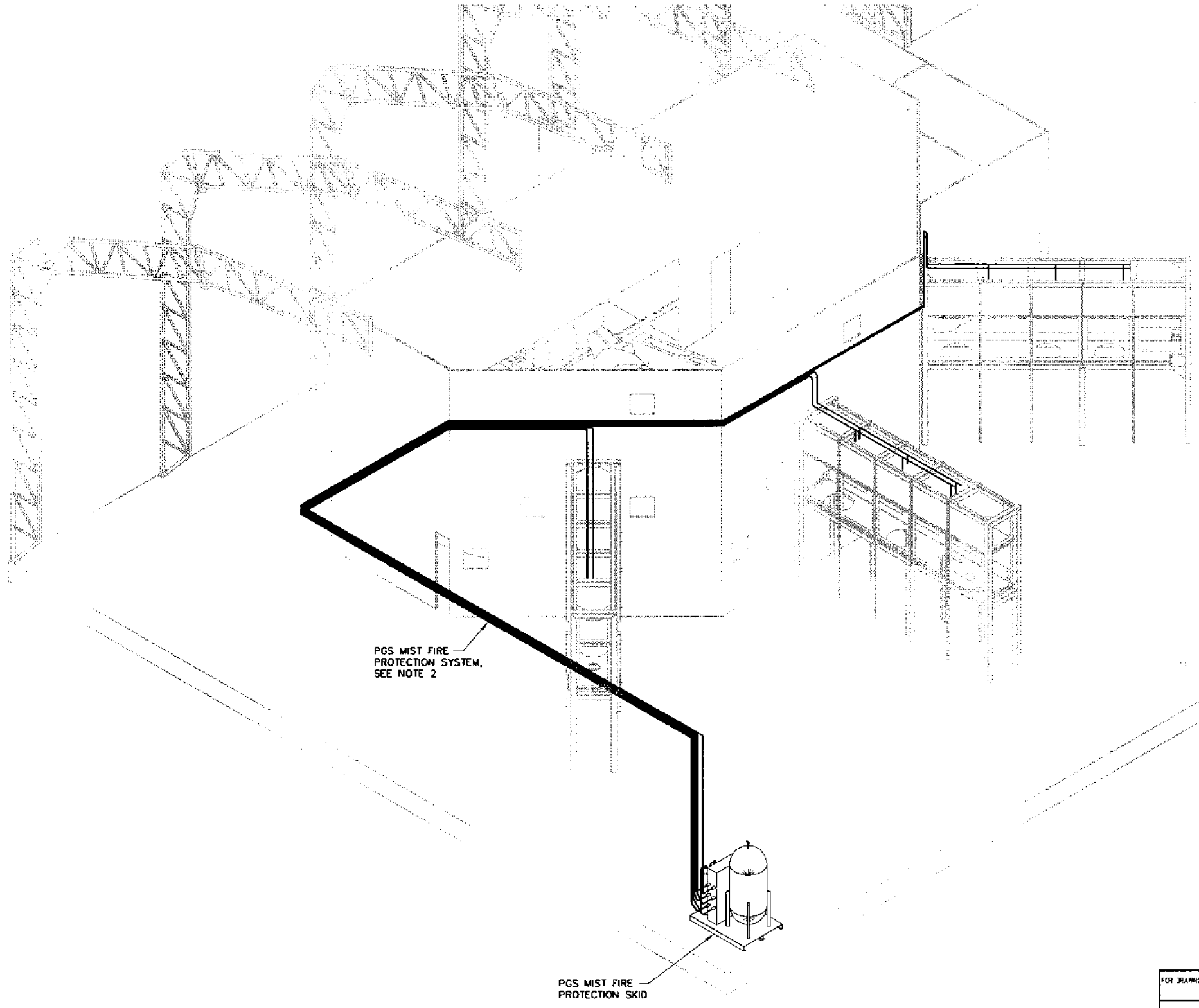

PGS FIRE PROTECTION ISOMETRIC

LOOKING NORTHWEST

NOTES

1. ALL TUBING AND FITTINGS ARE STAINLESS.
2. EACH PGS HAS AN AIR TUBE AND A WATER TUBE THAT SUPPLIES THREE MISTING NOZZLES.

X-REF DRAWING

519674.dwg
519675.dwg
519677.dwg

RELEASED FOR RECORD ONLY

DO NOT FABRICATE

REVISIONS		
REV	DESCRIPTION	EFFECTIVE DATE

FOR DRAWING INDEX SEE DRAWING NO. 519620	SUBCONTRACT NO	INEEL
NO SCALE	REQUESTER: SA DAVIES	OU 7-10 GLOVEBOX EXCAVATOR METHOD PROJECT WES / PGS
	DESIGN: J JENSEN	
	DRAWN: TB UMPHLETTE	PGS ISOMETRIC
	PROJECT NO 021052	
	SPEC CODE	
DESIGN PHASE CONCEPTUAL	FOR REVIEW/APPROVAL SIGNATURES SEE DAR NO. 87799	SIZE D · CAGE CODE 01MF3 · INDEX CODE NUMBER AREA 098 TYPE 0671 CL 52 ORIG 090 · DWG- 519655 · REV A
SAFETY CATEGORY SEE GENERAL NOTES	EFFECTIVE DATE	SCALE: NONE · SHEET FP-6

File: 519655-A.dwg ID: UMPHTB Layout Name: Layout1
Path: B:\obs\PIT9\GEM_2002\fp Date: 12/13/01 - 3:57 P.M.

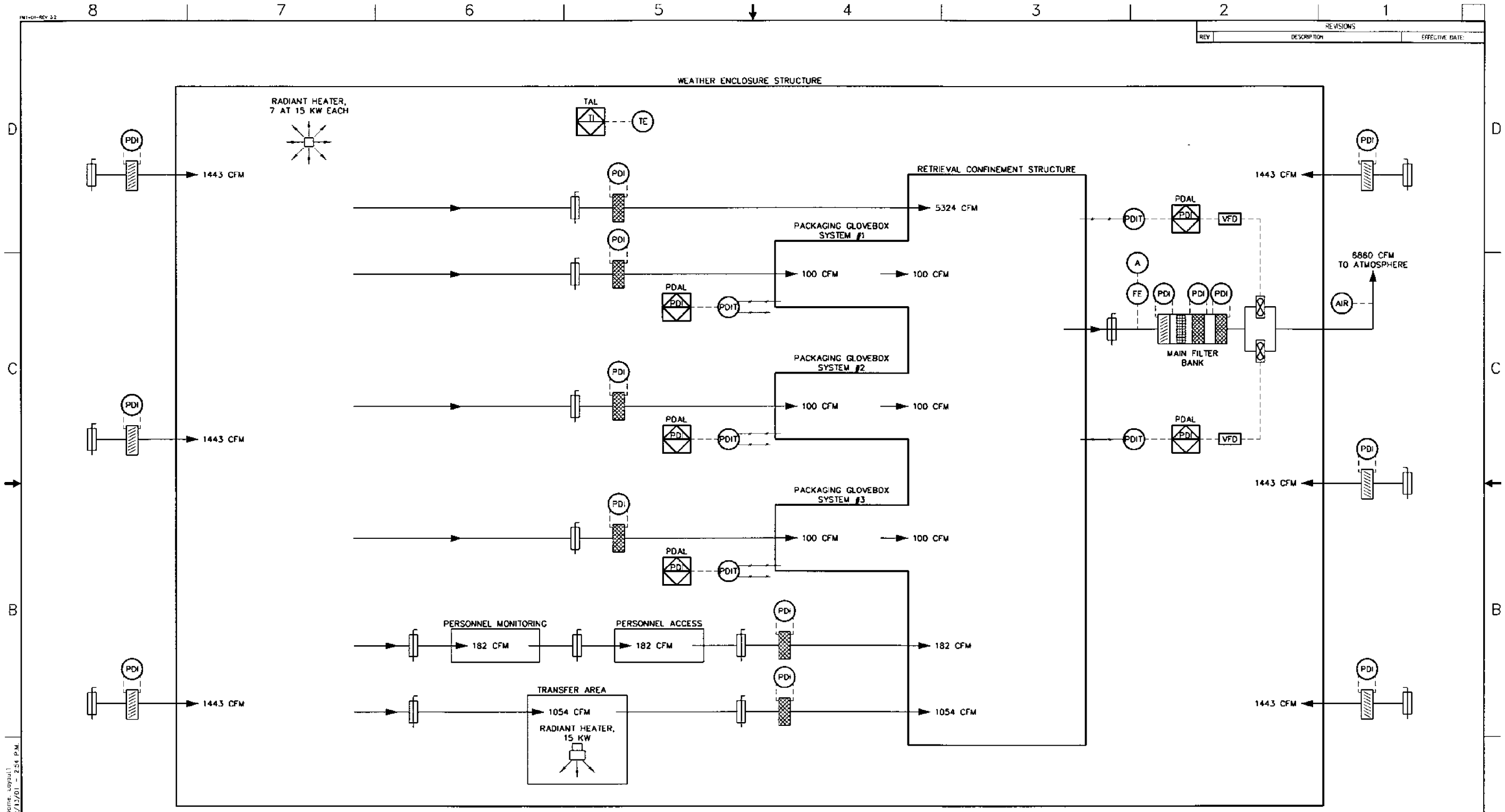

FLOW DIAGRAM

RELEASED FOR RECORD ONLY

DO NOT FABRICATE

FOR DRAWING INDEX SEE DRAWING NO. 519620	SUBCONTRACT NO	INEEL
NO SCALE	REQUESTER: SA DAVIES DESIGN: RM VAN VOAST DRAWN: TB UMPHLETTE PROJECT NO 021050 SPEC CODE	OU 7-10 GLOVEBOX EXCAVATOR METHOD PROJECT WES / RCS / PGS FLOW AND INSTRUMENTATION DIAGRAM
DESIGN PHASE: CONCEPTUAL	FOR REVIEW/APPROVAL SIGNATURES SEE DAR NO. 87799	SIZE D · CAGE CODE 01MF3 · INDEX CODE NUMBER AREA 098 TYPE 0671 CL 20 ORIG 090 · DWG- 519656 · REV A
SAFETY CATEGORY: SEE GENERAL NOTES	EFFECTIVE DATE:	SCALE: NONE · SHEET HV-1

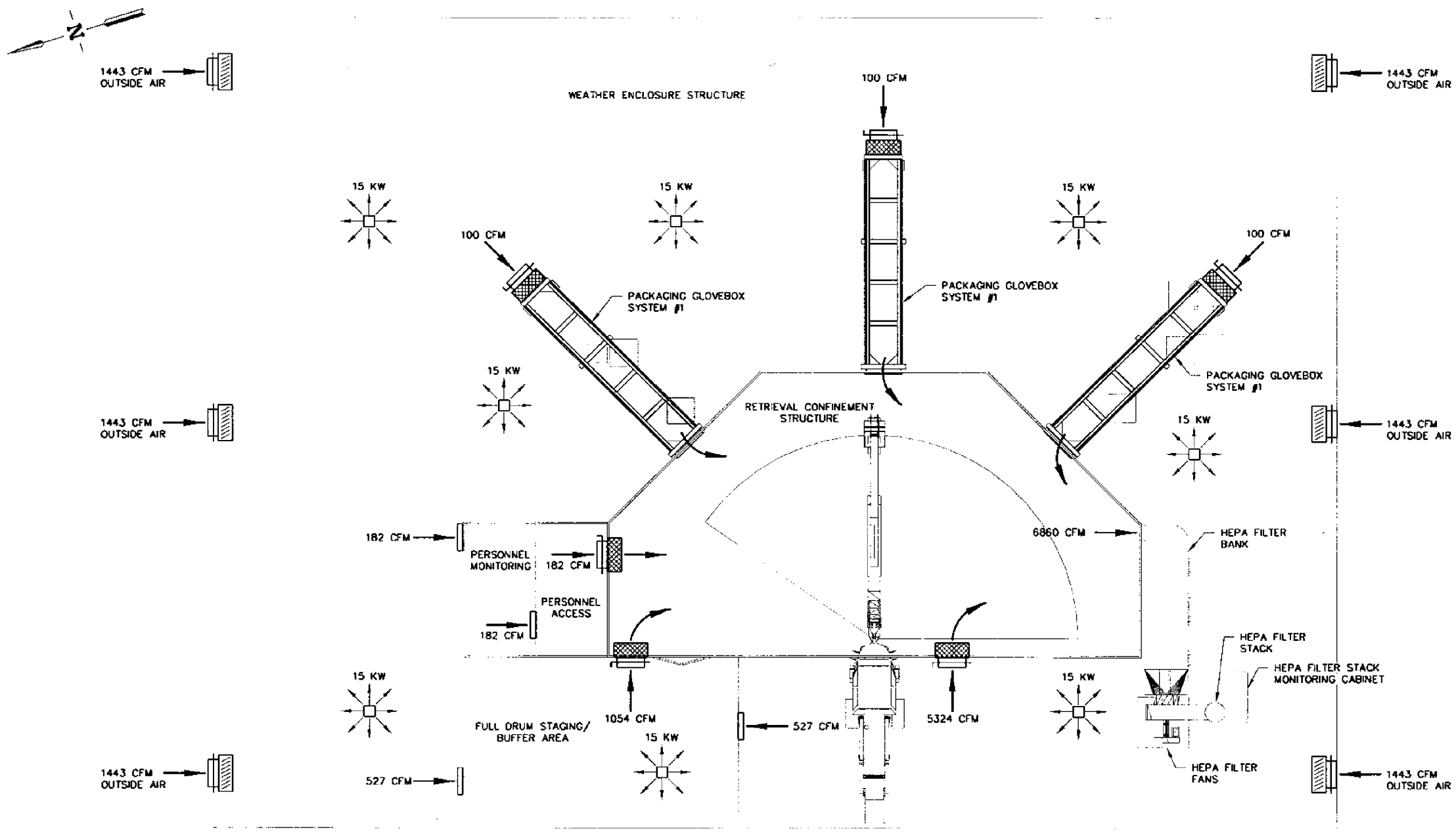

X-REF DRAWING
519674-A.dwg
519677-A.dwg

RELEASED FOR RECORD ONLY

DO NOT FABRICATE

FOR DRAWING INDEX SEE DRAWING NO 519620	SUBCONTRACT NO	INEEL
NO SCALE	REQUESTER: SA DAVIES DESIGN: RM VAN VOAST DRAWN: TB UMPHLETTE PROJECT NO. 021052 SPEC CODE	OU 7-10 GLOVEBOX EXCAVATOR METHOD PROJECT WES / RCS / PGS HVAC EQUIPMENT/AIRFLOW PATTERN PLAN
DESIGN PHASE: CONCEPTUAL	FOR REVIEW/APPROVAL SIGNATURES SEE DAR NO 87799	SIZE D · CAGE CODE 01MF3 · INDEX CODE NUMBER AREA 098 TYPE 0671 CL 20 ORIG 090 · DWG- 519657 · REV A
SAFETY CATEGORY: SEE GENERAL NOTES	EFFECTIVE DATE	SCALE: NONE · SHEET HV-2

REVISIONS		
REV	DESCRIPTION	EFFECTIVE DATE

HEATING AND VENTILATION EQUIPMENT SCHEDULE

EQUIPMENT NUMBER	DESCRIPTION	MAKE AND MODEL	POWER	REMARKS
SEE NOTE 1	HEPA FILTER BANK	SEE NOTE 1	——	PREFILTER, TEST 1, HEPA 1, TEST 2, HEPA 2, TEST 3
SEE NOTE 1	PRE-FILTER	SEE NOTE 1	——	30% PRE-FILTER FOR WES INLETS
SEE NOTE 1	ELECTRIC RADIANT HEATER	SEE NOTE 1	15KW	8 UNITS REQUIRED
SEE NOTE 1	FAN	SEE NOTE 1	20HP	6860 CFM
SEE NOTE 1	FAN	SEE NOTE 1	10HP	3430 CFM
SEE NOTE 1	BACKDRAFT DAMPER	SEE NOTE 1	——	6 REQUIRED
SEE NOTE 1	LOUVER W/MANUAL DAMPER	SEE NOTE 1	——	6 REQUIRED
SEE NOTE 1	INLET GRILL	SEE NOTE 1	——	4 REQUIRED

NOTES

1. TO BE DETERMINED AT TITLE I DESIGN PHASE.

RELEASED
FOR RECORD ONLY
DO NOT FABRICATE

FOR DRAWING INDEX SEE DRAWING NO. 519620	SUBCONTRACT NO	INEEL
NO SCALE	REQUESTER: SA DAVIES DESIGN: R VAN VOAST DRAWN: RICH WATSON PROJECT NO: 021050 SPEC CODE	OU 7-10 GLOVEBOX EXCAVATOR METHOD PROJECT WES / RCS / FFS EQUIPMENT SCHEDULE
DESIGN PHASE: CONCEPTUAL	FOR REVIEW/APPROVAL SIGNATURES SEE DAR NO. 87799	SIZE D · CAGE CODE 01MF3 · INDEX CODE NUMBER AREA 098 TYPE 0671 SQ 20 CONC 090 · DWG-519658 · REV A
SAFETY CATEGORY: SEE GENERAL NOTES	EFFECTIVE DATE:	SCALE: NONE · SHEET HV-3

File 519658-A.dwg
Path B:\dwg\PT9\GEM_2002\vanr
Layout Name: D Size
Date: 12/13/01 - 3:06 P.M.
ID: UNPMTB

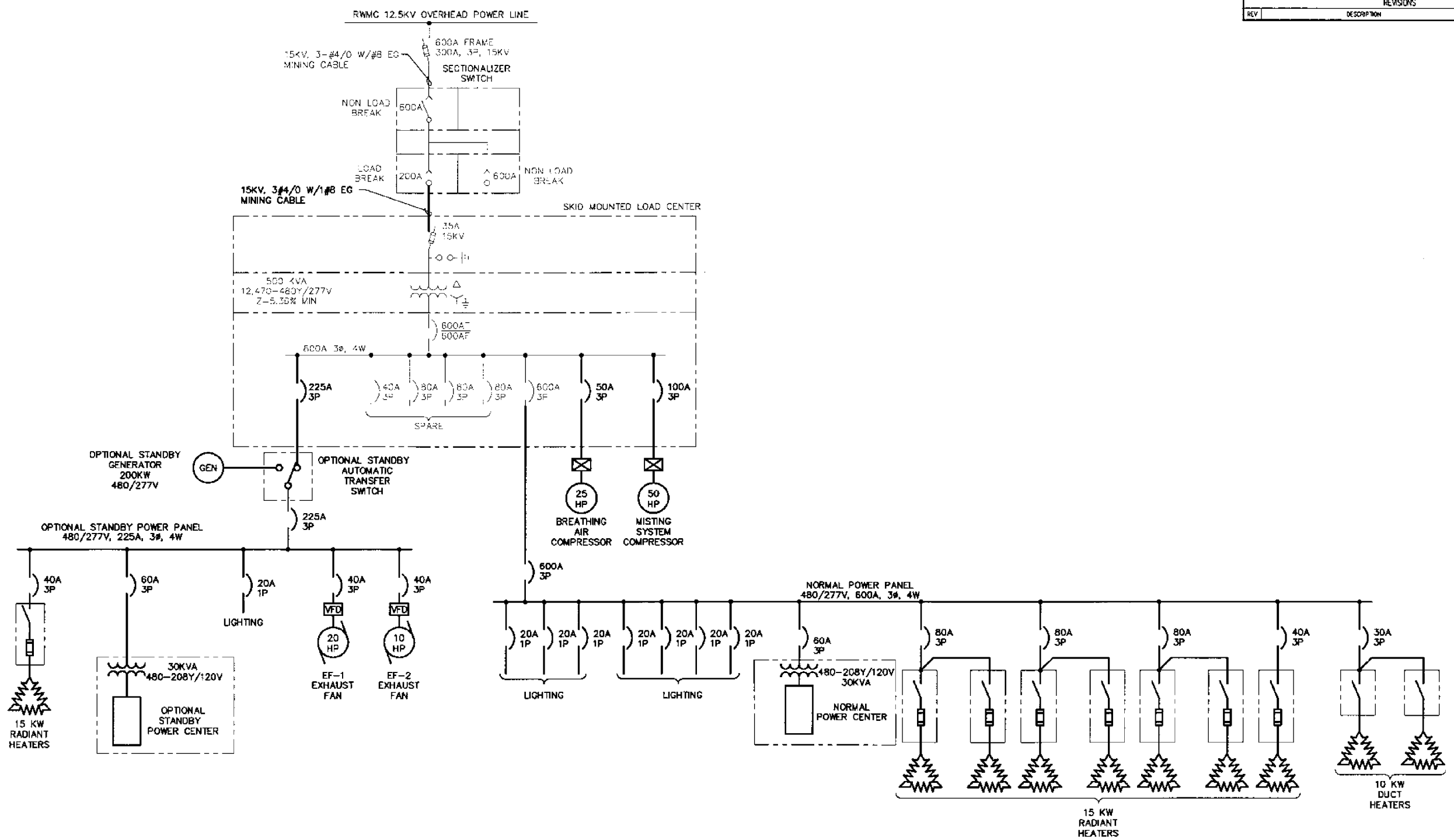

LEGEND

EXISTING

NEW

RELEASED
FOR RECORD ONLY
DO NOT FABRICATE

FOR DRAWING INDEX SEE DRAWING NO. 519620	SUBCONTRACT NO.	INEEL
NO SCALE	REQUESTER: SA DAVIES DESIGN: JE DUGGAN DRAWN: JL CARPENTER PROJECT NO. 021052 SPEC CODE	OU 7-10 GLOVEBOX EXCAVATOR METHOD PROJECT WES / RCS /PGS ONE LINE DIAGRAM
DESIGN PHASE: CONCEPTUAL SAFETY CATEGORY: SEE GENERAL NOTES	FOR REVIEW/APPROVAL SIGNATURES SEE DAR NO. 87799 EFFECTIVE DATE:	SIZE D · CAGE CODE 01MF3 · INDEX CODE NUMBER AREA 098 TYPE 0400 CL 10 DWG 090 · DWG-519659 · REV A SCALE: NONE · SHEET E-1

REVISIONS

REV	DESCRIPTION	EFFECTIVE DATE

REVISIONS		
REV	DESCRIPTION	EFFECTIVE DATE:

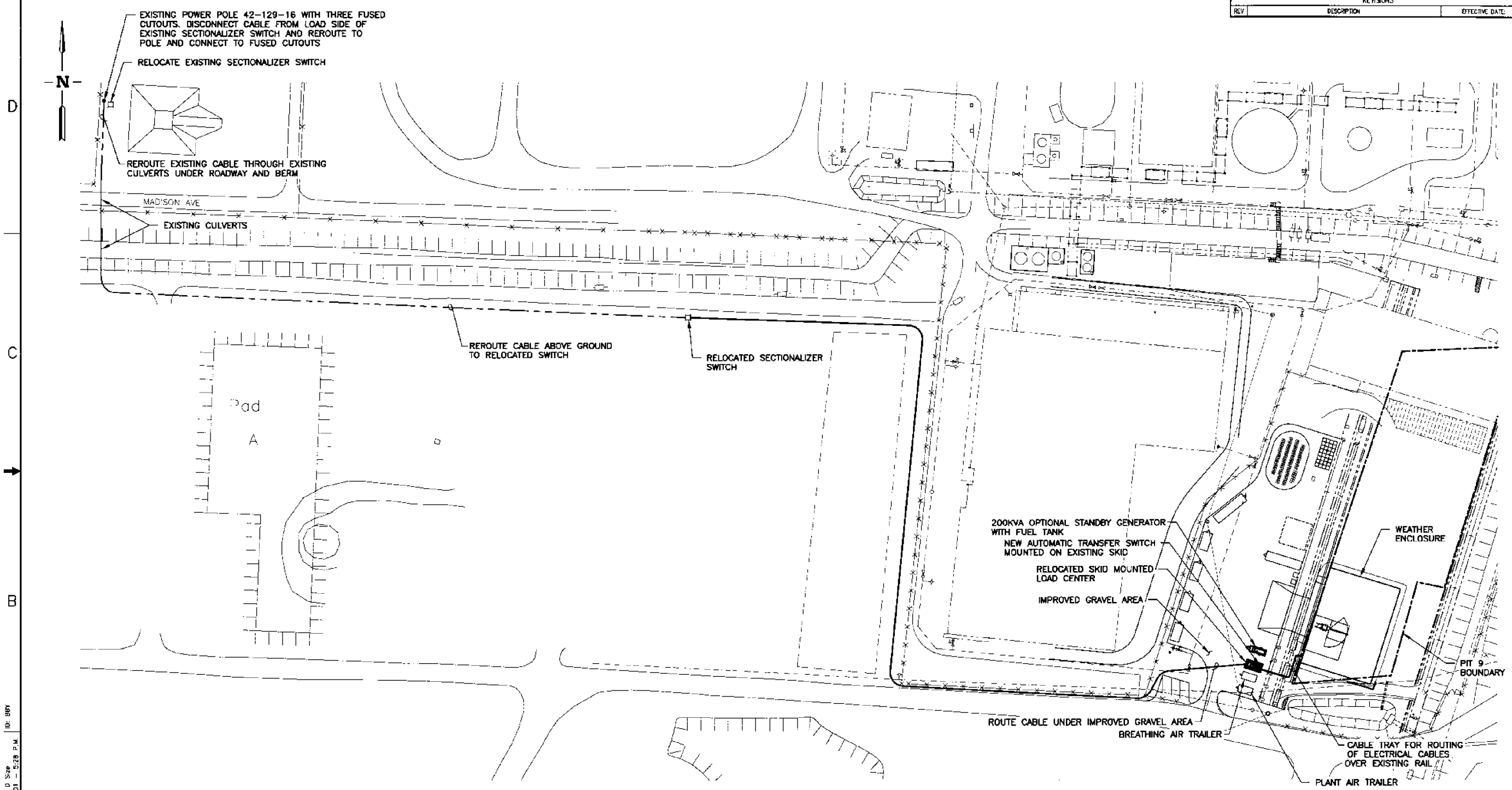

X-REF DRAWINGS

519678-A

RELEASED
FOR RECORD ONLY
DO NOT FABRICATE

FOR DRAWING INDEX SEE DRAWING NO. 519620	SUBCONTRACT NO.	INEEL (Idaho National Engineering & Environmental Laboratory) BECHTEL BWXT IDAHO, LLC
SCALE: 1" = 50.0'	REQUESTER: S.A. DAVIES	OU 7-10 GLOVEBOX EXCAVATOR METHOD PROJECT WES / RCS / PGS
	DESIGN: J.E. DUGGAN	
	DRAWN: D.H. MANWILL	POWER PLOT PLAN
	PROJECT NO: 021052	
	SPEC CODE	
DESIGN PHASE: CONCEPTUAL	FOR REVIEW/APPROVAL SIGNATURES SEE DAR NO. 87799	SIZE D; CAGE CODE 01MF3; INDEX CODE NUMBER AREA 036, TYPE 0400, CL 10, ORG 090; DWG-519660; REV A
SAFETY CATEGORY: SEE GENERAL NOTES	EFFECTIVE DATE:	SCALE: 1"=50.0'; SHEET E-2

File: 519660-A.dwg
Path: N:\Cad\V18\CPM_7002\wes\
Layout Name: D Size
Date: 12/3/01 - 2:28 P.M.
ID: 889

REVISIONS		
REV	DESCRIPTION	EFFECTIVE DATE

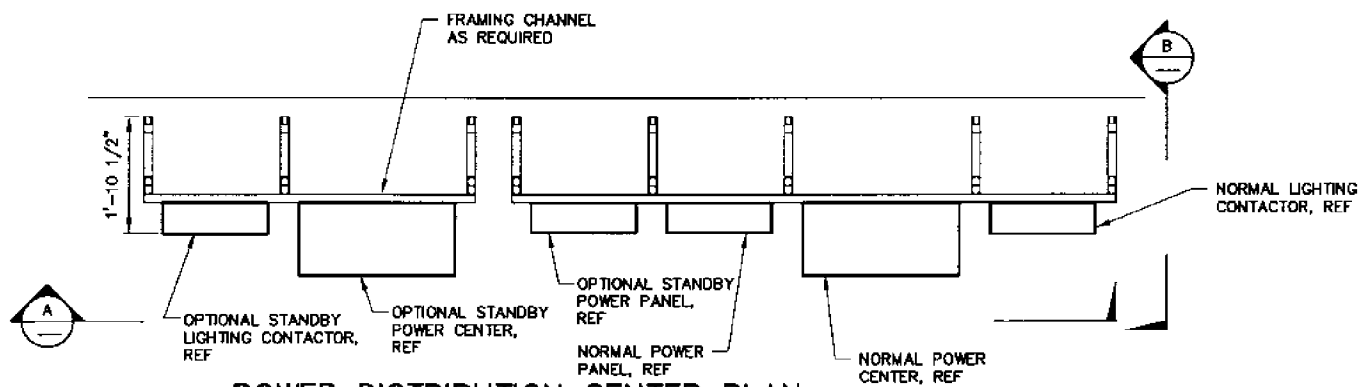

POWER DISTRIBUTION CENTER PLAN

SCALE: 3/4"=1'-0"

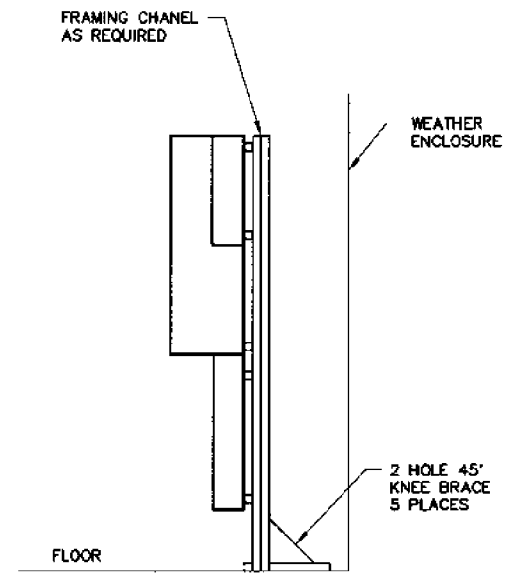

VIEW B

SCALE: 3/4"=1'-0"

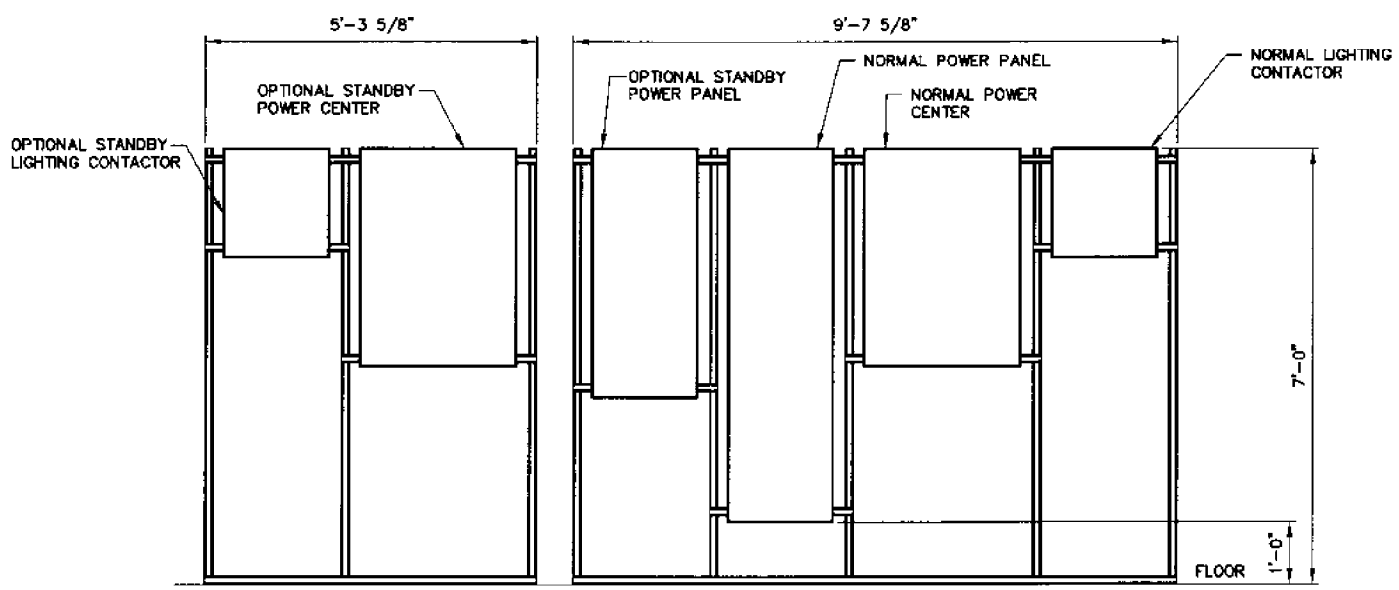

VIEW A

SCALE: 3/4"=1'-0"

RELEASED
FOR RECORD ONLY
DO NOT FABRICATE

FOR DRAWING INDEX SEE DRAWING NO. 519620	SUBCONTRACT NO.	INEEL (Idaho National Engineering & Environmental Laboratory) BECHTEL BWXT IDAHO, LLC
SCALE: 3/4" = 1'-0"	REQUESTER: S A DAVIES	OU 7-10 GLOVEBOX EXCAVATOR METHOD PROJECT WES / RCS / PGS
	DESIGN: J E DUGGAN	
	DRAWN: J L CARPENTER	
	PROJECT NO. 021052	POWER DISTRIBUTION CENTER LAYOUT
	SPEC CODE	
DESIGN PHASE: CONCEPTUAL	FOR REVIEW/APPROVAL SIGNATURES SEE DAR NO. 87798	SIZE D · CAGE CODE 01MF3 · INDEX CODE NUMBER AREA 098 TYPE 0871 CL 10 ORIG 090 · DWG-519661 · REV A
SAFETY CATEGORY: SEE ENGINEERING NOTES	EFFECTIVE DATE:	SCALE: 3/4"=1'-0" · SHEET E-3

File: 519661-A.dwg
Path: W:\Ces\FIB\CEM 2002\Mod
Layout Name: Layout1
Date: 12/13/01 - 7:05 P.M.
ID: BBr

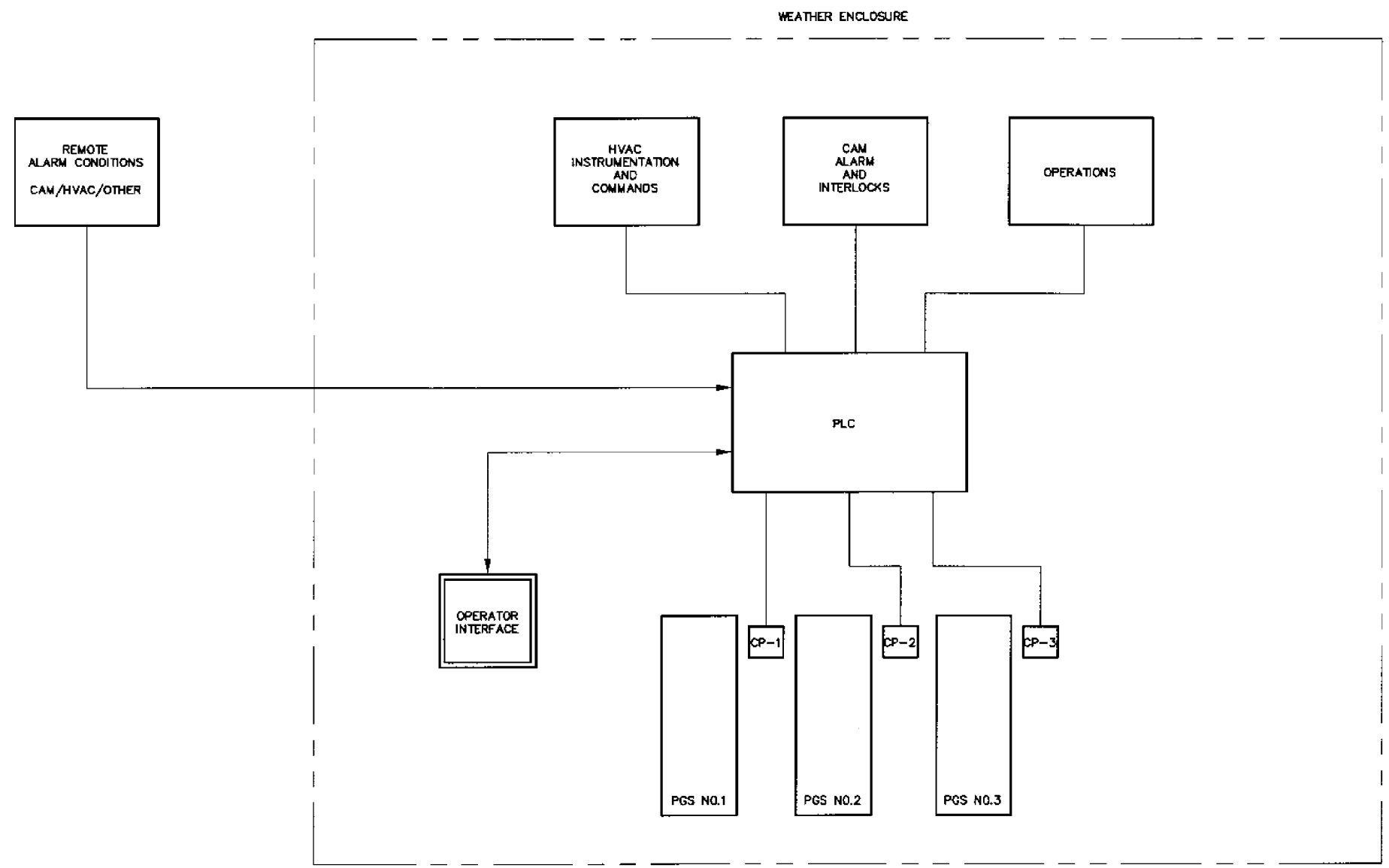

RELEASED
FOR RECORD ONLY
DO NOT FABRICATE

FOR DRAWING INDEX SEE DRAWING NO. 519620	SUBCONTRACT NO.	INEEL
NO SCALE	REQUESTER: SA DAVIES	OU 7-10 GLOVEBOX EXCAVATOR METHOD PROJECT WES / RCS / PGS
	DESIGN: G PRESLAR	
	DRAWN: M CHRISTENSEN	
	PROJECT NO. 021052	PLC BLOCK DIAGRAM
	SPEC CODE	
DESIGN PHASE: CONCEPTUAL	FOR REVIEW/APPROVAL SIGNATURES SEE DAR NO. 87799	SIZE D · CAGE CODE 01MF3 · INDEX CODE NUMBER: AREA 098, TYPE 0871, CL 25, DRC 090 · DWG-519662 · REV A
SAFETY CATEGORY: SEE GENERAL NOTES	EFFECTIVE DATE:	SCALE: NONE · SHEET IN-1

File: 519662-A.dwg
Path: W:\abs\PIT9\GEM_2002\in
Layout Name: Layout1
Date: 12/13/01 - 5:44 P.M.
ID: BBY

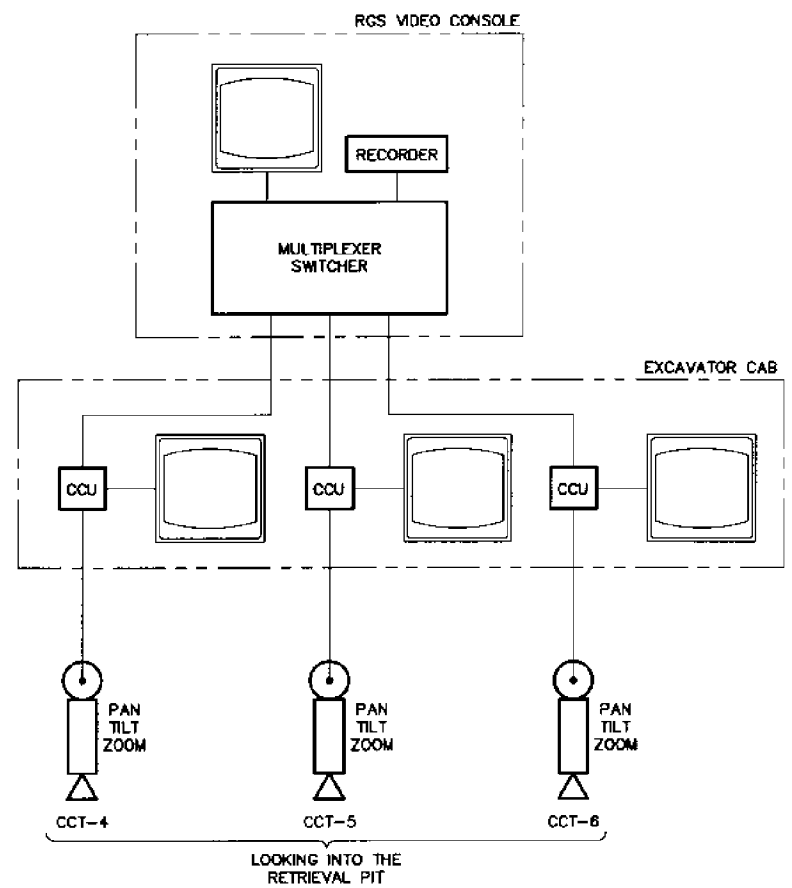

RELEASED
FOR RECORD ONLY
DO NOT FABRICATE

FOR DRAWING INDEX SEE DRAWING NO. 519620	SUBCONTRACT NO.	INEEL
NO SCALE	REQUESTER: SA DAVIES DESIGN: P BUNNELL DRAWN: J L CARPENTER PROJECT NO. 021052 SPEC CODE	OU 7-10 GLOVEBOX EXCAVATOR METHOD PROJECT WES / RCS / PGS VIDEO MONITORING SYSTEM BLOCK DIAGRAM
DESIGN PHASE: CONCEPTUAL	FOR REVIEW/APPROVAL SIGNATURES SEE DAR NO. 87799	SIZE D · CAGE CODE 01MF3 · INDEX CODE NUMBER: AREA 098, TYPE 0671, CL 25, DRG 090 · DWG-519663 · REV A
SAFETY CATEGORY: SEE GENERAL NOTES	EFFECTIVE DATE:	SCALE: NONE · SHEET IN-2

File: 519663-A.dwg Path: W:\cdw\PIT9\GEM_2002\in Layout Name: Layout1 Date: 12/13/01 - 6:03 P.M. ID: BBY

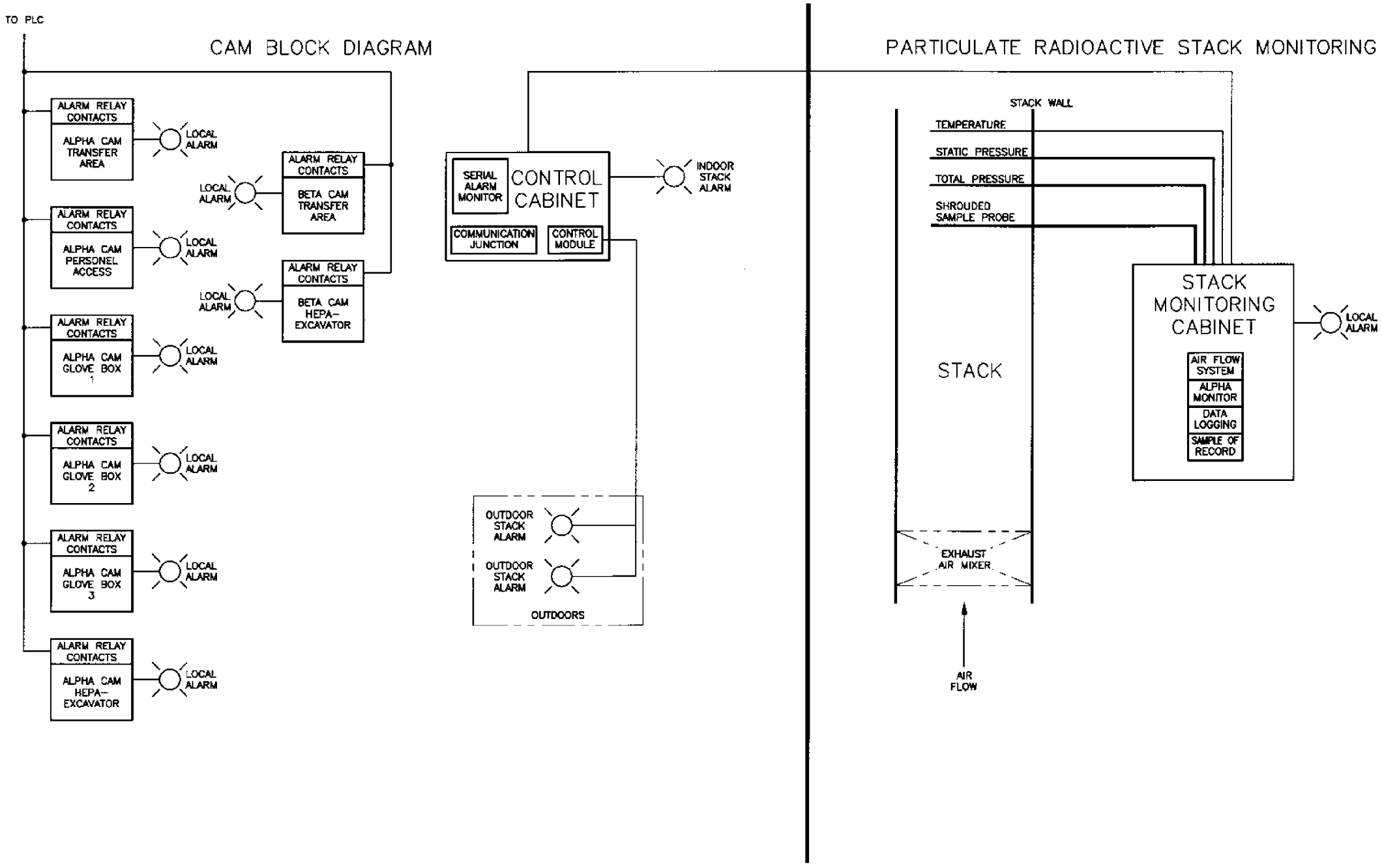

RELEASED
FOR RECORD ONLY
DO NOT FABRICATE

FOR DRAWING INDEX SEE DRAWING NO. 519620	SUBCONTRACT NO.	INEEL
NO SCALE	REQUESTER: SA DAVIES DESIGN: D NORMAN DRAWN: J L CARPENTER PROJECT NO. 021052 SPEC CODE	OU 7-10 GLOVEBOX EXCAVATOR METHOD PROJECT WES / RCS / PGS GEM RADIOLOGICAL MONITORING BLOCK DIAGRAM
DESIGN PHASE: CONCEPTUAL	FOR REVIEW/APPROVAL SIGNATURES SEE DAR NO. 87799	SIZE D · CAGE CODE 01MF3 · INDEX CODE NUMBER: AREA 098, TYPE 0671, CL 25, ORIG 090 · DWG-519664 · REV A
SAFETY CATEGORY: SEE GENERAL NOTES	EFFECTIVE DATE:	SCALE: NONE · SHEET IN-3

File: 519664-A.dwg Path: W:\obs\PITS\GEM_2002\In Layout Name: Layout1 Date: 12/13/01 - 8:02 P.M. ID: BBY

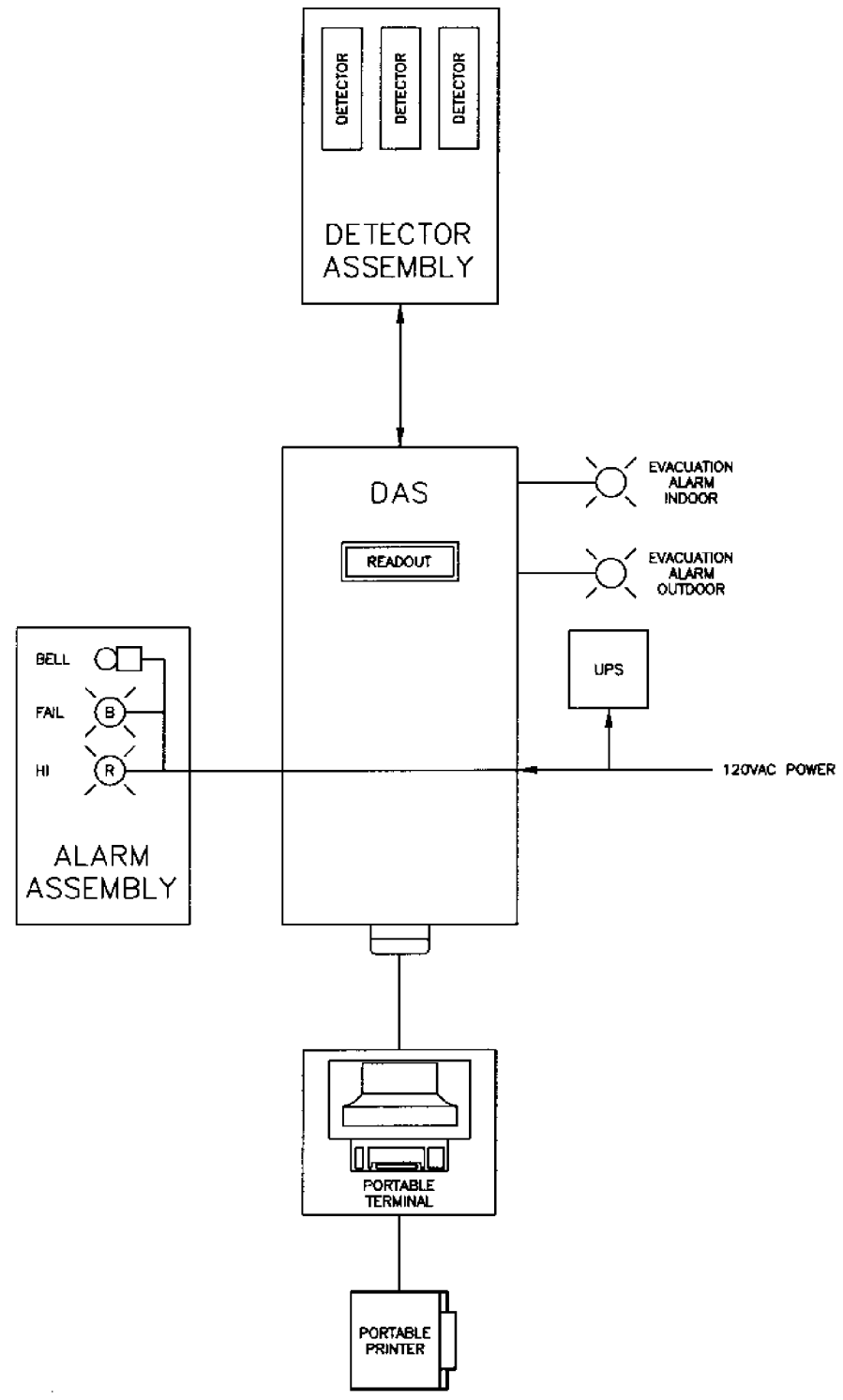

RELEASED
FOR RECORD ONLY
DO NOT FABRICATE

FOR DRAWING INDEX SEE DRAWING NO. 519620	SUBCONTRACT NO.	INEEL
NO SCALE	REQUESTER: S.A. DAVIES DESIGN: D.R. NORMAN DRAWN: D.H. MANWILL PROJECT NO. 021052 SPEC CODE	OU 7-10 GLOVEBOX EXCAVATOR METHOD PROJECT WES / RCS / PGS CRITICALITY ALARM SYSTEM BLOCK DIAGRAM
DESIGN PHASE: CONCEPTUAL	FOR REVIEW/APPROVAL SIGNATURES SEE DAR NO. 87799	SIZE D · CAGE CODE 01MF3 · INDEX CODE NUMBER: AREA 098, TYPE 0671, CL 25, ORIG 090 · DWG-519665 · REV A
SAFETY CATEGORY: SEE GENERAL NOTES	EFFECTIVE DATE:	SCALE: NONE · SHEET IN-4

REVISIONS

REV	DESCRIPTION	EFFECTIVE DATE

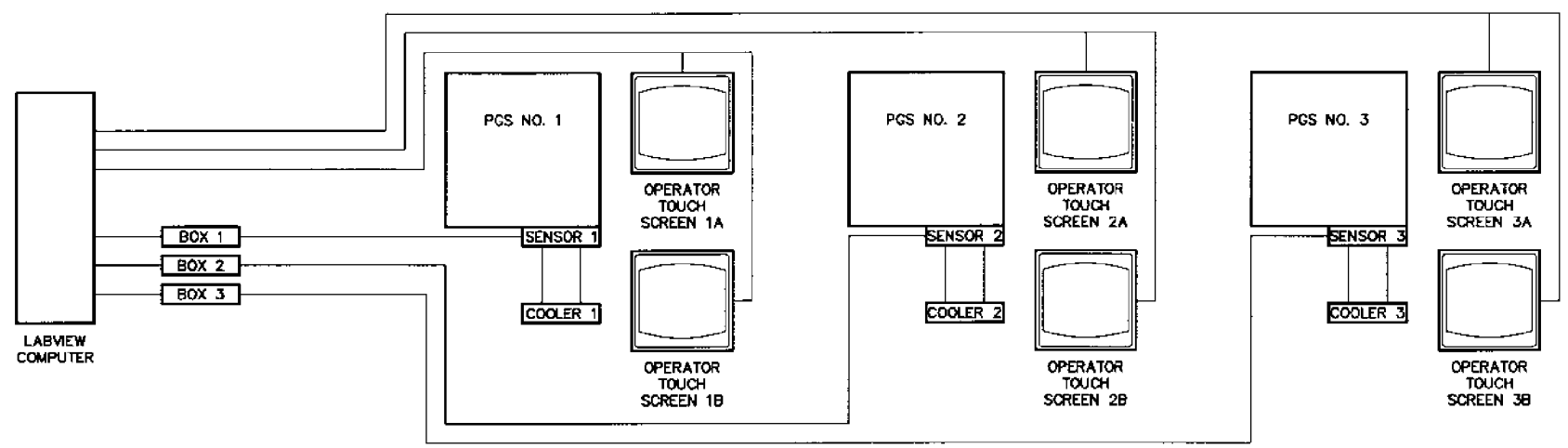

RELEASED
FOR RECORD ONLY
DO NOT FABRICATE

REVISIONS		
REV	DESCRIPTION	EFFECTIVE DATE:

FOR DRAWING INDEX SEE DRAWING NO. 519620	SUBCONTRACT NO.	INEEL
NO SCALE	REQUESTER: SA DAVIES DESIGN: D CRESAP DRAWN: J L CARPENTER PROJECT NO. 021052 SPEC CODE	OU 7-10 GLOVEBOX EXCAVATOR METHOD PROJECT WES / RCS / PGS FISSILE MATERIAL MONITORING BLOCK DIAGRAM
DESIGN PHASE: CONCEPTUAL	FOR REVIEW/APPROVAL SIGNATURES SEE DAR NO. 87799	SIZE D · CAGE CODE 01MF3 · INDEX CODE NUMBER AREA 098 TYPE 0671 LL 25 GHBS 090 · DWG-519666 · REV A
SAFETY CATEGORY: SEE GENERAL NOTES	EFFECTIVE DATE:	SCALE: NONE · SHEET IN-5

File: 519666-A.dwg Path: W:\abs\PITS\GEM_2002\In Layout Name: Layout1 Date: 12/13/01 - 6:07 P.M. ID: BBY

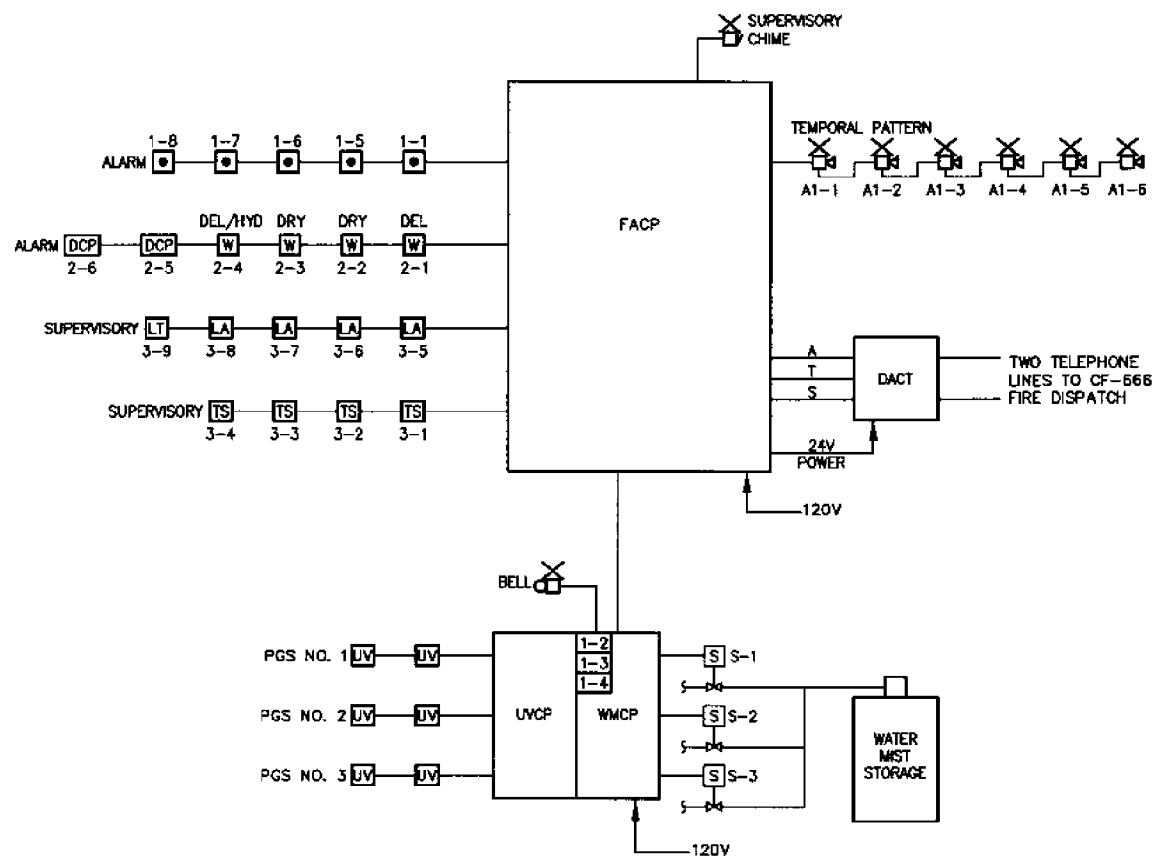

FIRE ALARM SYSTEM
RISER DIAGRAM

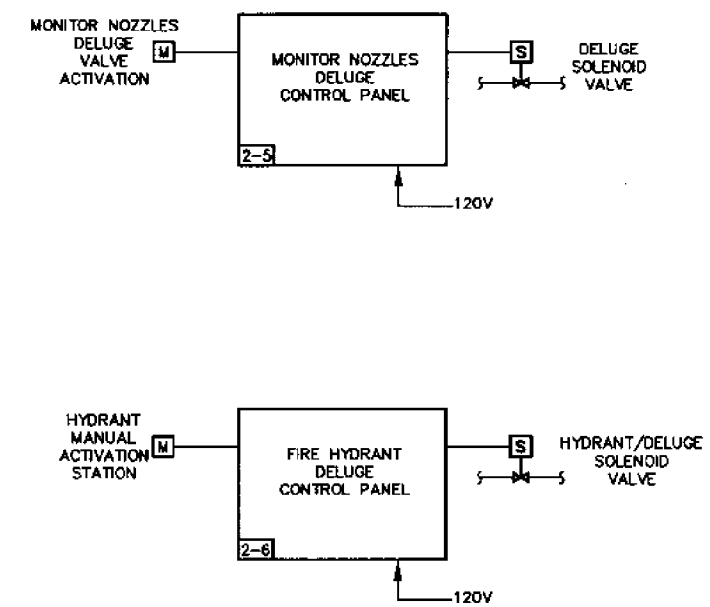

DELUGE CONTROL PANELS
LOCATED IN SPRINKLER RISER ENCLOSURE

RELEASED
FOR RECORD ONLY
DO NOT FABRICATE

FOR DRAWING INDEX SEE DRAWING NO. 519620	SUBCONTRACT NO.	INEEL
NO SCALE	REQUESTER: SA DAVIES DESIGN: J JENSEN DRAWN: J L CARPENTER PROJECT NO. 021052 SPEC CODE	OU 7-10 GLOVEBOX EXCAVATOR METHOD PROJECT WES / PGS / PGS FIRE ALARM SYSTEM DIAGRAMS
DESIGN PHASE: CONCEPTUAL	FOR REVIEW/APPROVAL SIGNATURES SEE DAR NO. 87799	SIZE D · CAGE CODE 01MF3 · INDEX CODE NUMBER: AREA 098 TYPE 0671 CL 08 ORIG 090 · DWG- 519667 · REV A
SAFETY CATEGORY: SEE ENGINEERING	EFFECTIVE DATE:	SCALE: NONE · SHEET LSS-1

File: 519667-A.dwg
Path: W:\obs\PITD\OEM_2002\lss
Layout Name: Layout1
Date: 12/13/01 - 6:29 P.M.
ID: BBY

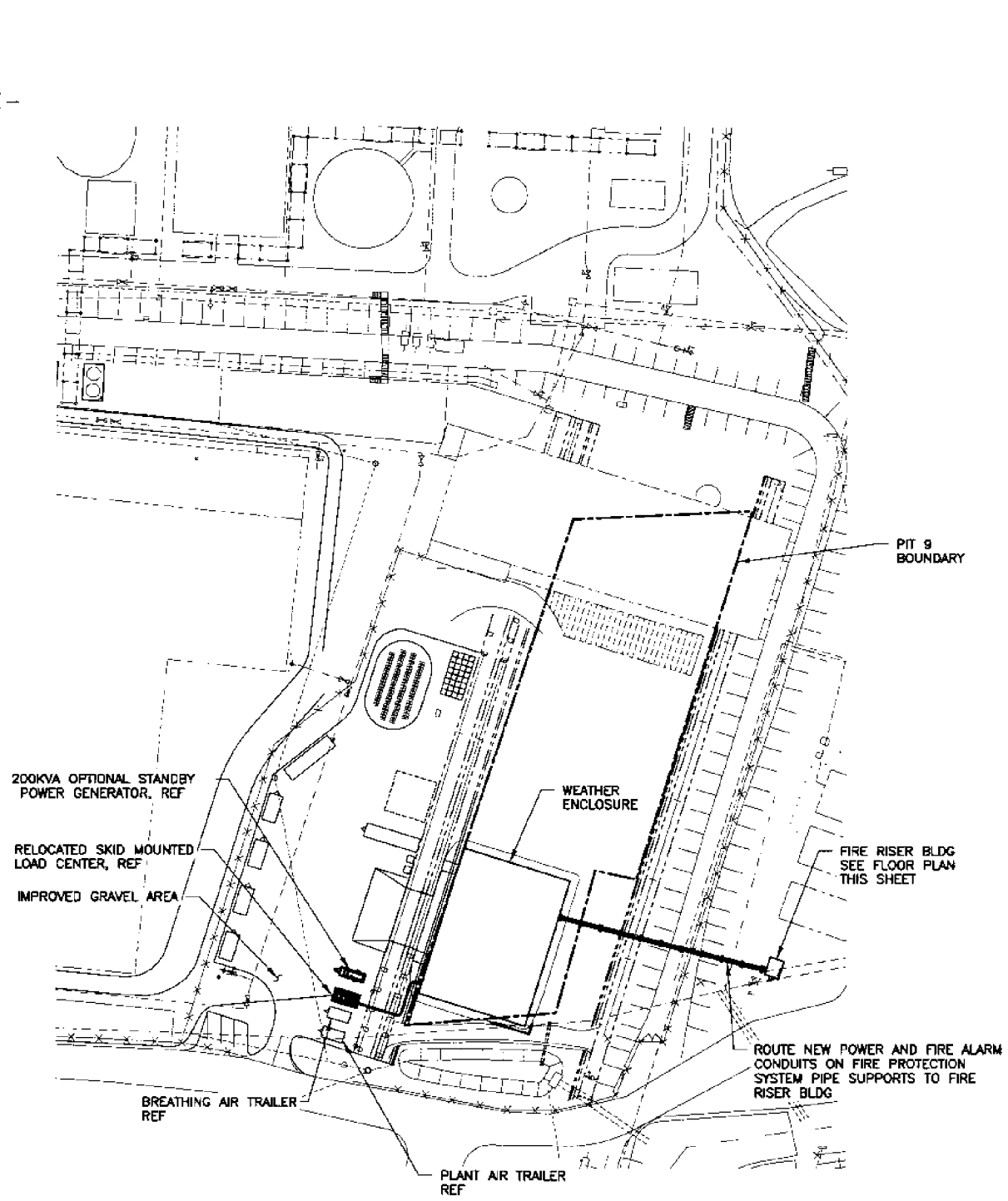

PLOT PLAN

SCALE: 1"=50.0'

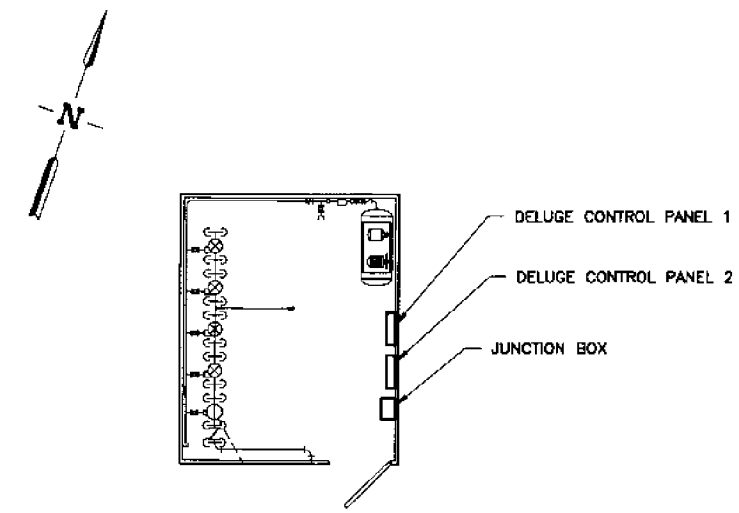

FLOOR PLAN

X-REF DRAWINGS

519678-A

REVISIONS		
REV	DESCRIPTION	EFFECTIVE DATE

FOR DRAWING INDEX SEE DRAWING NO. 519620	SUBCONTRACT NO.	INEEL
SCALE: 1" = 50.0'	REQUESTER: SA DAVIES	OU 7-10 GLOVEBOX EXCAVATOR METHOD PROJECT WES / RCS / PGS
	DESIGN: J.D. JENSEN	
	DRAWN: D.H. MANWILL	
	PROJECT NO. 021052	PLOT PLAN AND FIRE RISER BUILDING PLAN
	SPEC CODE	
DESIGN PHASE: CONCEPTUAL	FOR REVIEW/APPROVAL SIGNATURES SEE DAR NO. 87799	SIZE D · CAGE CODE 01MF3 · INDEX CODE NUMBER: AREA 036, TYPE 0400, CL 12, ORIG 090 · DWG-519668 · REV A
SAFETY CATEGORY: SEE GENERAL NOTES	EFFECTIVE DATE:	SCALE: 1"=50.0' · SHEET LSS-2

File: 519668-A.dwg
Path: W:\cdc\PIT9\GEM_2002\lss
Layout Name: D Size
Date: 12/13/01 - 6:21 P.M.
ID: BBY

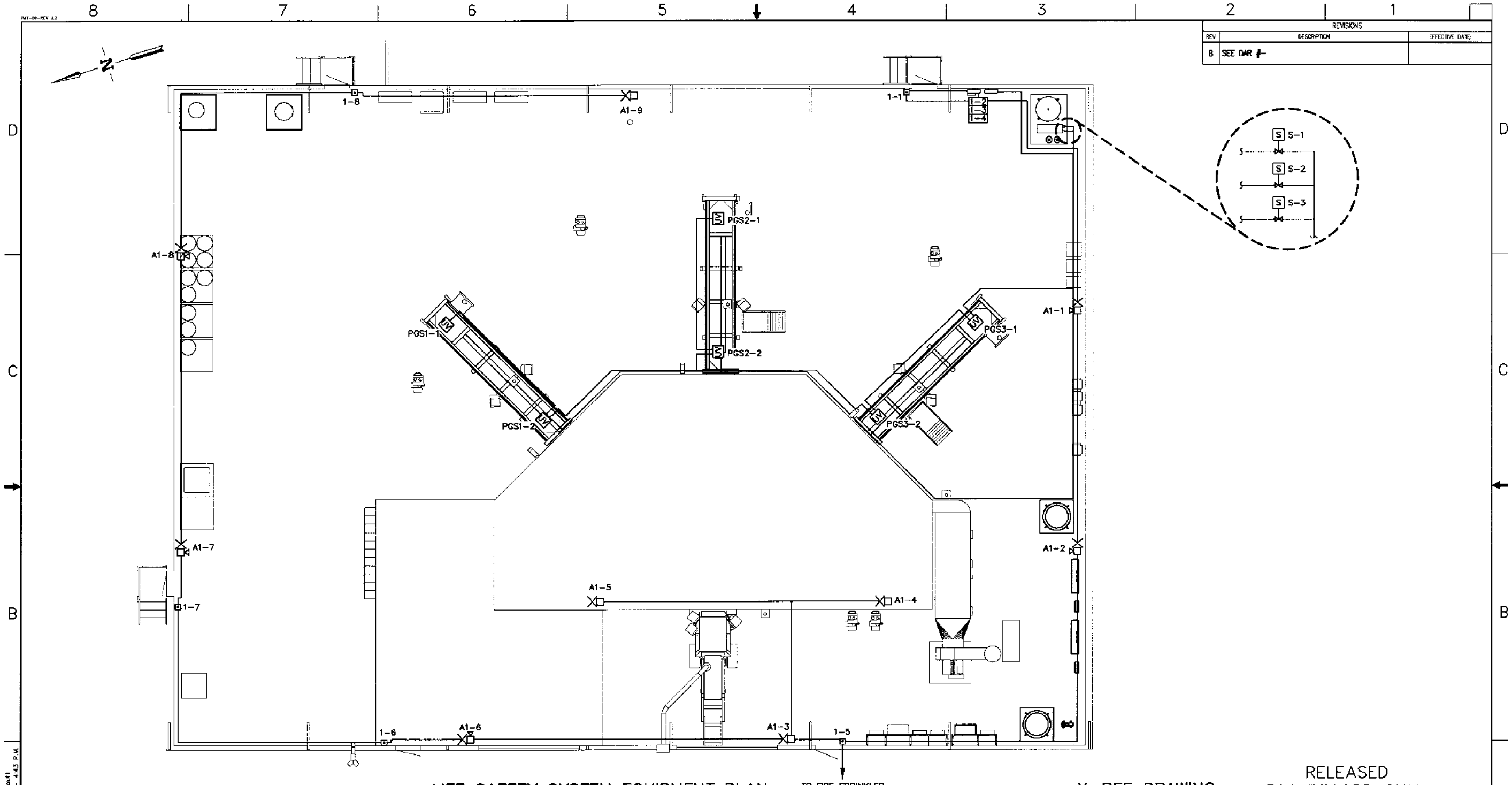

LIFE SAFETY SYSTEM EQUIPMENT PLAN

LOOKING SOUTH EAST

X-REF DRAWING

519674-A
519675-A
519676-A
519677-A

RELEASED FOR RECORD ONLY
DO NOT FABRICATE

REVISIONS		
REV	DESCRIPTION	EFFECTIVE DATE:
B	SEE DAR #-	

FOR DRAWING INDEX SEE DRAWING NO. 519620

SCALE: 3/16" = 1'-0"

DESIGN PHASE: CONCEPTUAL

SAFETY CATEGORY: SEE REVIEW NOTES

SUBCONTRACT NO.

REQUESTER: SA DAVIES
DESIGN: J JENSEN
DRAWN: TB UMPHLETTE
PROJECT NO. 021052
SPEC CODE
FOR REVIEW/APPROVAL SIGNATURES SEE DAR NO. 87799
EFFECTIVE DATE:

INEEL

OU 7-10
GLOVEBOX EXCAVATOR METHOD PROJECT
WES / RCS / PGS

ALARM EQUIPMENT PLAN

SIZE	CAGE CODE	INDEX CODE NUMBER AREA	TYPE	CL	ORIG	DWG-	REV
D	01MF3	098	0671	12	090	519670	B

SCALE: 3/16"=1'0"

SHEET LSS-3

File: 519569-B.dwg ID: ABE Layout Name: Layout1
Path: P:\INEEL-EXT-01-01512-REV-B Date: 01/09/02 - 4:43 P.M.