ABQ05

CALCULATION COVER SHEET

WESTON
MANAGERS DESIGNERS/CONSULTANTS

Project:	**INEEL V-Tank Remediation Project**				**Number of Sheets:** 1 of 40
Site:	INEEL Test Area North, Idaho Falls, Idaho				
Calculation Number:	ABQ05 – CE001		**Work Order Number:**	12393.002.001	
Subject:	**Excavation – Preliminary Estimate of Shoring Requirements**				
Rev #	**Date:**	**Revision:**	**Calculated by:**	**Checked by:**	**Approved:**
RAA	4/11/01	60%	Rob Ederer	N/A	N/A
RAB	6/1/01	90%	Rob Ederer	Dan Brennecke	Berg Keshian
RAC	6/27/01	90% Polish	Berg Keshian	Dan Brennecke	
RAD	9/27/01	Draft Final	Berg Keshian	Dan Brennecke	9/25/01

Problem Statement:

Determine loading stress required to be resisted by shoring.

Method of Solution:

1. Determine soil type
2. Determine angle of friction
3. Determine the soil pressure on shoring or trench box
4. Determine distribution of soil pressure.

Assumptions:

1. Soil type is the same throughout the site.
2. Information provided by INEEL is correct.

Sources of Formulas and References:

Geotech Soils Report, WAG 1 TSF-09/18

Soil Mechanics
NAVFAC DM-7-1
May 1982
Pg 7.1 - 147

Soil Mechanics	
NAVFAC DM-7-1	DM 7-2
March 1971	May 1982
Pg 7 - 9-2	Pg 7.2-62

Calculation:

See attached.

Shoring Available with Existing Stresses:

Based on existing stresses and per Speed Shore's manufacturer's tabulated data for double-wall trench shield, model TS-1024-DW8 has a 24 foot length, a shield capacity of 1,100 psf, which is above the required calculated stress of 671 psf, and is allowable for up to 22 feet of depth for type C(60) soils. Two 10-foot deep shields can be stacked to a total depth of 20 feet, which is adequate for the expected excavation of 20 feet. Two TS-1024-DW8s will accommodate a 48-foot long excavation length. Reinforced steel plates can be welded to ends of shields to provide total enclosure of excavation.

Speed Shore trench shields are designed and certified by Registered Professional Engineers, are made of steel construction, can be customized to accommodate the V-tank site conditions and are commercially available. Speed Shore trench shields or a similar product are recommended for this application.

Summary of Results:

Soil function angle = 32 degrees
Soil Cohesion = 0
Soil Type = SW-SP
Stress on shoring = 671 psf

WESTON

MANAGERS DESIGNERS/CONSULTANTS

CLIENT/SUBJECT: UTANKS

W.O. NO.:

TASK DESCRIPTION: Soil Strength determination

TASK NO.:

PREPARED BY: B KESHIAN DEPT: DATE: 5/28/01

MATH CHECK BY: DEPT: DATE:

METHOD REV. BY: DEPT: DATE:

APPROVED BY: DEPT: DATE:

Determine Strength / Friction Angle of Soils Surrounding UTANKS

Ref. - Geotech Soils Report
WAG 1
TSR - 09/18
ISU Engineering data

- Soil Mechanics
NAVFAC DM-7-1
MAY 1982
Pg 7.1-149

DM 7-2
May 1982
Pg 7.2-62

- Soil Mechanics
NAVFAC DM 7-1
MARCH 1971
Pg 7-9-2

From Soils Report

Grain size shows that soils are a silty SAND

$\gamma_d = 1.53 g/cm^3 \times 62.4 \#/cf = 95.5 \#/cf$

Grain size classifies soil as a SM-SP by unified soil classification system

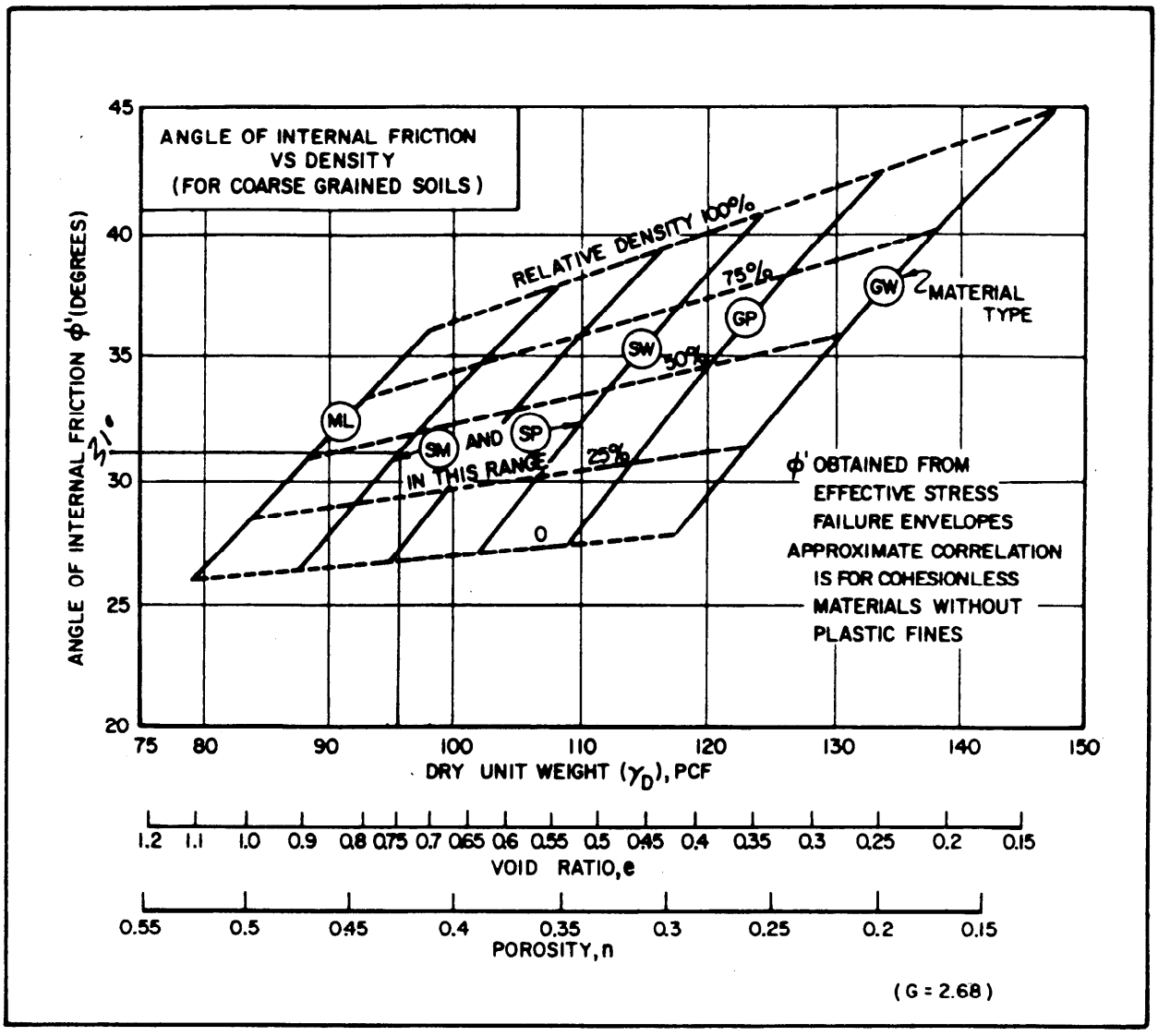

FIGURE 7
Correlations of Strength Characteristics for Granular Soils

TABLE 9-1
Typical Properties of Compacted Materials

Group symbol	Soil type	Range of maximum dry unit weight, pcf	Range of optimum moisture, percent	Typical value of compression: At 1.4 tsf (20 psi)	Typical value of compression: At 3.6 tsf (50 psi)	Typical strength characteristics: Cohesion (as compacted) psf	Typical strength characteristics: Cohesion (saturated) psf	Typical strength characteristics: ϕ (Effective stress envelope) degrees	Typical strength characteristics: Tan ϕ	Typical coefficient of permeability ft/min.	Range of CBR values	Range of subgrade modulus k lb/cu in.
				percent of original height								
GW	Well graded clean gravels, gravel-sand mixtures.	125 - 135	11 - 8	0.3	0.6	0	0	>38	>0.79	5×10^{-2}	40 - 80	300 - 500
GP	Poorly graded clean gravels, gravel-sand mix.	115 - 125	14 - 11	0.4	0.9	0	0	>37	>0.74	10^{-1}	30 - 60	250 - 400
GM	Silty gravels, poorly graded gravel-sand-silt.	120 - 135	12 - 8	0.5	1.1	.....	.....	>34	>0.67	$>10^{-6}$	20 - 60	100 - 400
GC	Clayey gravels, poorly graded gravel-sand-clay.	115 - 130	14 - 9	0.7	1.6	.....	.....	>31	>0.60	$>10^{-7}$	20 - 40	100 - 300
SW	Well graded clean sands, gravelly sands.	110 - 130	16 - 9	0.6	1.2	0	0	38	0.79	$>10^{-3}$	20 - 40	200 - 300
SP	Poorly graded clean sands, sand-gravel mix.	100 - 120	21 - 12	0.8	1.4	0	0	37	0.74	$>10^{-3}$	10 - 40	200 - 300
SM	Silty sands, poorly graded sand-silt mix.	110 - 125	16 - 11	0.8	1.6	1050	420	34	0.67	5×10^{-5}	10 - 40	100 - 300
SM-SC	Sand-silt clay mix with slightly plastic fines.	110 - 130	15 - 11	0.8	1.4	1050	300	33	0.66	2×10^{-6}	.....	
SC	Clayey sands, poorly graded sand-clay mix.	105 - 125	19 - 11	1.1	2.2	1550	230	31	0.60	5×10^{-7}	5 - 20	100 - 300
ML	Inorganic silts and clayey silts .	95 - 120	24 - 12	0.9	1.7	1400	190	32	0.62	10^{-5}	15 or less	100 - 200
ML-CL	Mixture of inorganic silt and clay	100 - 120	22 - 12	1.0	2.2	1350	460	32	0.62	5×10^{-7}	.....	
CL	Inorganic clays of low to med. plasticity.	95 - 120	24 - 12	1.3	2.5	1800	270	28	0.54	10^{-7}	15 or less	50 - 200
OL	Organic silts and silt-clays, low plasticity.	80 - 100	33 - 21	.....	.....	.....	.....	.....	.....	.....	5 or less	50 - 100
MH	Inorganic clayey silts, elastic silts.	70 - 95	40 - 24	2.0	3.8	1500	420	25	0.47	5×10^{-7}	10 or less	50 - 100
CH	Inorganic clays of high plasticity	75 - 105	36 - 19	2.6	3.9	2150	230	19	0.35	10^{-7}	15 or less	50 - 150
OH	Organic clays and silty clays . . .	65 - 100	45 - 21	.....	.....	.....	.....	.....	.....	.....	5 or less	25 - 100

Notes:

1. All properties are for condition of "standard Proctor" maximum density, except values of k and CBR which are for "modified Proctor" maximum density.
2. Typical strength characteristics are for effective strength envelopes and are obtained from USBR data.
3. Compression values are for vertical loading with complete lateral confinement.
4. (>) indicates that typical property is greater than the value shown.

(....) indicates insufficient data available for an estimate.

5 of 40

WESTON

SHEET ____ of ____ 6 of 40

CLIENT/SUBJECT _____ W.O. NO. _____

TASK DESCRIPTION _____ TASK NO. _____

PREPARED BY _____ DEPT _____ DATE _____

MATH CHECK BY _____ DEPT _____ DATE _____

METHOD REV. BY _____ DEPT _____ DATE _____

APPROVED BY _____ DEPT _____ DATE _____

Using this data and charts from Pln 7-1
TABLE 9-1
Figure 7

it can be seen that the ~~STATE~~ effective friction angle for the soils will Range from 31° to 37° with no cohesion

Since the Soil is closer to an SP material a conservative assumption is that

$\phi = 32°$ $C = 0$

USE This data to determine the Soil pressures for Shoring or Trench boxes

WESTON

SHEET ____ of ____

CLIENT/SUBJECT _____ W.O. NO. _____

TASK DESCRIPTION Active Pressures for Shoring TASK NO. _____

PREPARED BY _____ DEPT _____ DATE _____

MATH CHECK BY _____ DEPT _____ DATE _____

METHOD REV. BY _____ DEPT _____ DATE _____

APPROVED BY _____

DEPT _____ DATE _____

Figure 2

Pg ~~Figure~~ 7.2-62

GRANULAR Soil

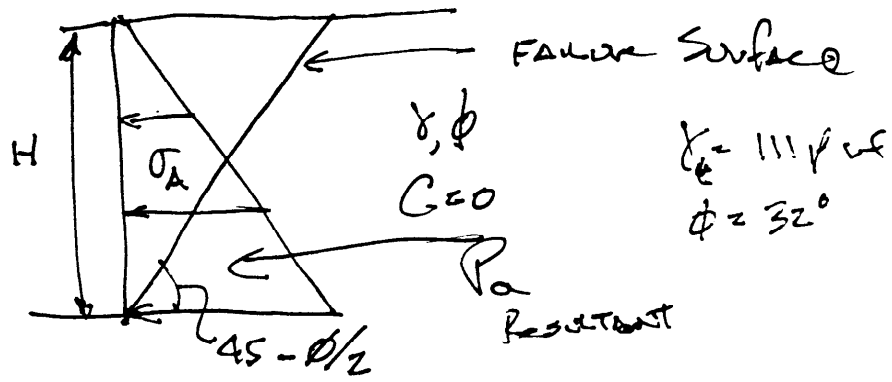

$$K_A = \tan^2(45 - \phi/2)$$

$\phi = 32°$

$(45 - \phi/2) = 29$

$K_A \quad \tan^2 = .31$

$$P_A = K_A \gamma H^2/2$$

$$= .31 \times 111 \times \frac{20^2}{2} = 6821 \text{ lbs/LF}$$

GRANULAR SOIL	COHESIVE SOIL, NO FRICTIONAL RESISTANCE	COMBINED COHESION AND FRICTION
ACTIVE PRESSURES		
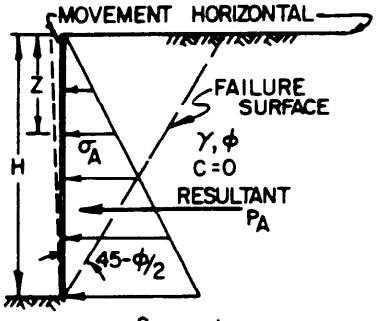 $K_A = \tan^2(45-\phi/2)$ $\sigma_A = K_A \gamma Z$ $P_A = K_A \gamma H^2/2$	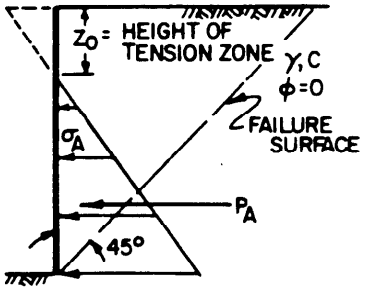 $Z_0 = 2C/\gamma$ $\sigma_A = \gamma Z - 2C$ $P_A = \gamma H^2/2 - 2CH + \frac{2C^2}{\gamma}$	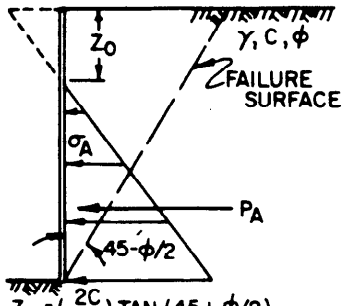 $Z_0 = (\frac{2C}{\gamma}) \tan(45+\phi/2)$ $\sigma_A = \gamma Z \tan^2(45-\phi/2) - 2C \tan(45-\phi/2)$ $P_A = (\frac{\gamma H^2}{2}) \tan^2(45-\phi/2) - 2CH \tan(45-\phi/2) + 2C^2/\gamma$
PASSIVE PRESSURES		
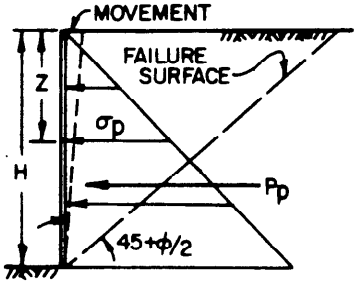 $K_p = \tan^2(45+\phi/2)$ $\sigma_p = K_p \gamma Z$ $P_p = K_p \gamma H^2/2$	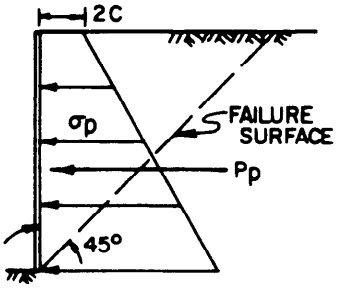 $\sigma_p = \gamma Z + 2C$ $P_p = \frac{1}{2} \gamma H^2 + 2CH$	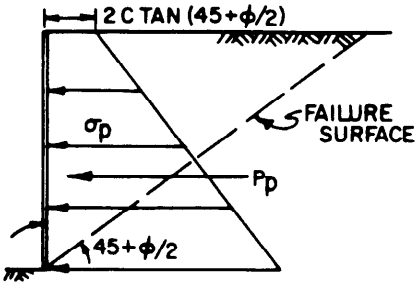 $\sigma_p = \gamma Z \tan^2(45+\phi/2) + 2C \tan(45+\phi/2)$ $P_p = (\frac{\gamma H^2}{2}) \tan^2(45+\phi/2) + 2CH \tan(45+\phi/2)$

GRAPHIC SOLUTION FOR SLOPING BACKFILL

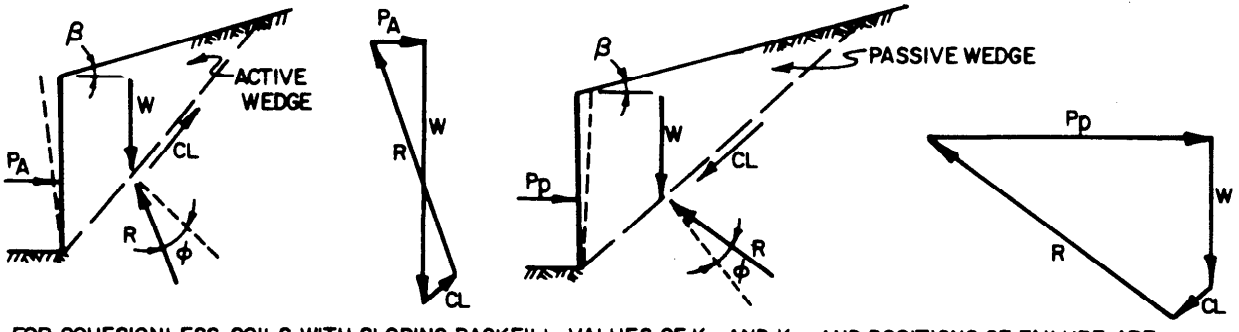

FOR COHESIONLESS SOILS WITH SLOPING BACKFILL, VALUES OF K_A AND K_P, AND POSITIONS OF FAILURE ARE GIVEN IN FIGURE 4.

FOR SOIL WITH C AND ϕ, THE POSITION OF THE FAILURE SURFACE IS DETERMINED BY ANALYZING TRIAL WEDGES TO OBTAIN MAXIMUM VALUE OF P_A AND MINIMUM VALUE OF P_p.

THE CASES SHOWN INVOLVE THE FOLLOWING ASSUMPTIONS.

1. MATERIALS ARE HOMOGENEOUS.
2. SUFFICIENT MOVEMENT HAS OCCURRED SO SHEAR STRENGTH ON RUPTURE SURFACE IS COMPLETELY MOBILIZED.
3. WALL IS VERTICAL. NO SHEAR FORCES ARE PRESENT ON BACK OF WALL. RESULTANT FORCES ARE HORIZONTAL.

UNDER THESE CONDITIONS, RESULTANT PRESSURES ARE ACTIVE AND PASSIVE VALUES, AND RUPTURE SURFACE IS A STRAIGHT PLANE THROUGH HEEL OF WALL. EFFECTS OF SURCHARGE AND GROUNDWATER PRESSURES ARE NOT INCLUDED

FIGURE 2
Computation of Simple Active and Passive Pressures

CLIENT/SUBJECT _____ W.O. NO. _____

TASK DESCRIPTION _____ TASK NO. _____

PREPARED BY _____ DEPT _____ DATE _____

MATH CHECK BY _____ DEPT _____ DATE _____

METHOD REV. BY _____ DEPT _____ DATE _____

APPROVED BY _____ DEPT _____ DATE _____

Now Determine distribution of Soil Pressures behind Shoring

For Cohessionless Soils

Pg 7.2-100
Figure 26

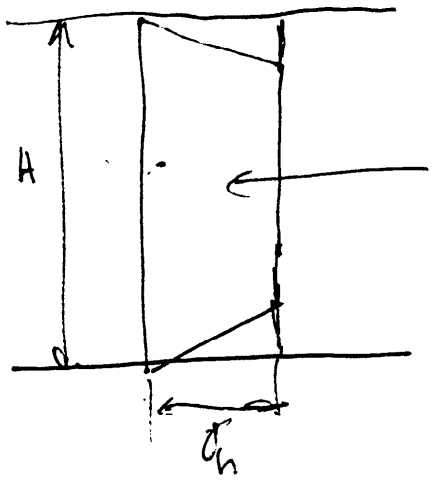

$P_a = 6821$ #/LF

or 341 #/LF/LF

$\sigma_h = .65\ K_A \cdot \gamma \cdot h$

$= .65 \times .31 \cdot 111 \cdot 20$

$= 447.3$ #/LF ← Use this As Stress on Shoring Then Apply Factor of Safety of 1.5

$\therefore\ 1.5 \times 447.3 = 671$ #/LF

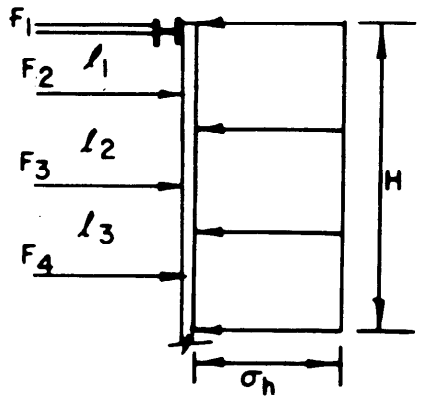

(a) SAND

$\sigma_h = 0.65\ K_A \cdot \gamma H$

WHERE $K_A = \tan^2(45 - \phi/2)$

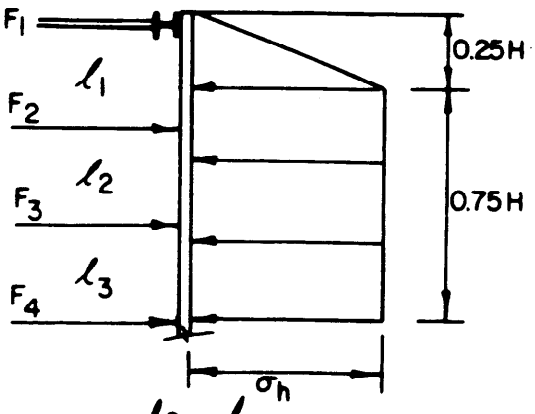

$F_3 = \left(\frac{l_2}{2} + \frac{l_3}{2}\right)\sigma_h$

ASSUME HINGES AT STRUT LOCATIONS FOR CALCULATING STRUT FORCES

(b) SOFT TO MEDIUM CLAY ($N_o > 6$)

For clays base the selection on $N_o = \gamma H/c$

$\sigma_h = K_A \cdot \gamma \cdot H$

$K_A = 1 - m\frac{4c}{\gamma H}$;

m = 1 except where cut is underlain by deep soft normally consolidated clay, then $m = 0.4F_{SB}$

See Figure 28 for Factor of Safety against bottom instability, (F_{SB}): $1 \leq F_{SB} \leq 1.5$

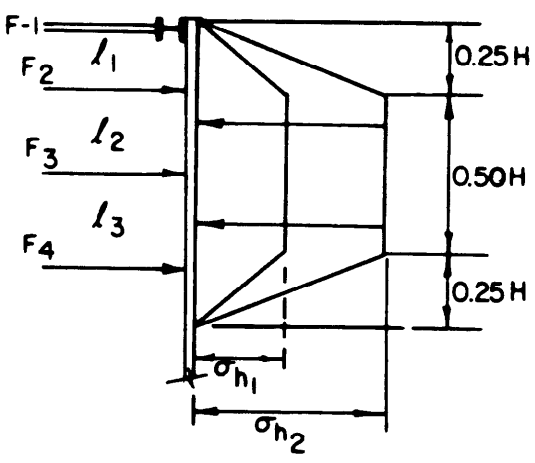

(c) STIFF CLAY ($N_o < 4$)

For $4 < N_o < 6$, use larger of diagrams (b) and (c).

$\sigma_{h_1} = 0.2\gamma H$; $\sigma_{h_2} = 0.4\gamma H$

Use lower value when movements are minimal and short construction period.

FIGURE 26

Pressure Distribution for Brace Loads in Internally Braced Flexible Walls

GRAIN SIZE DISTRIBUTION

Figure

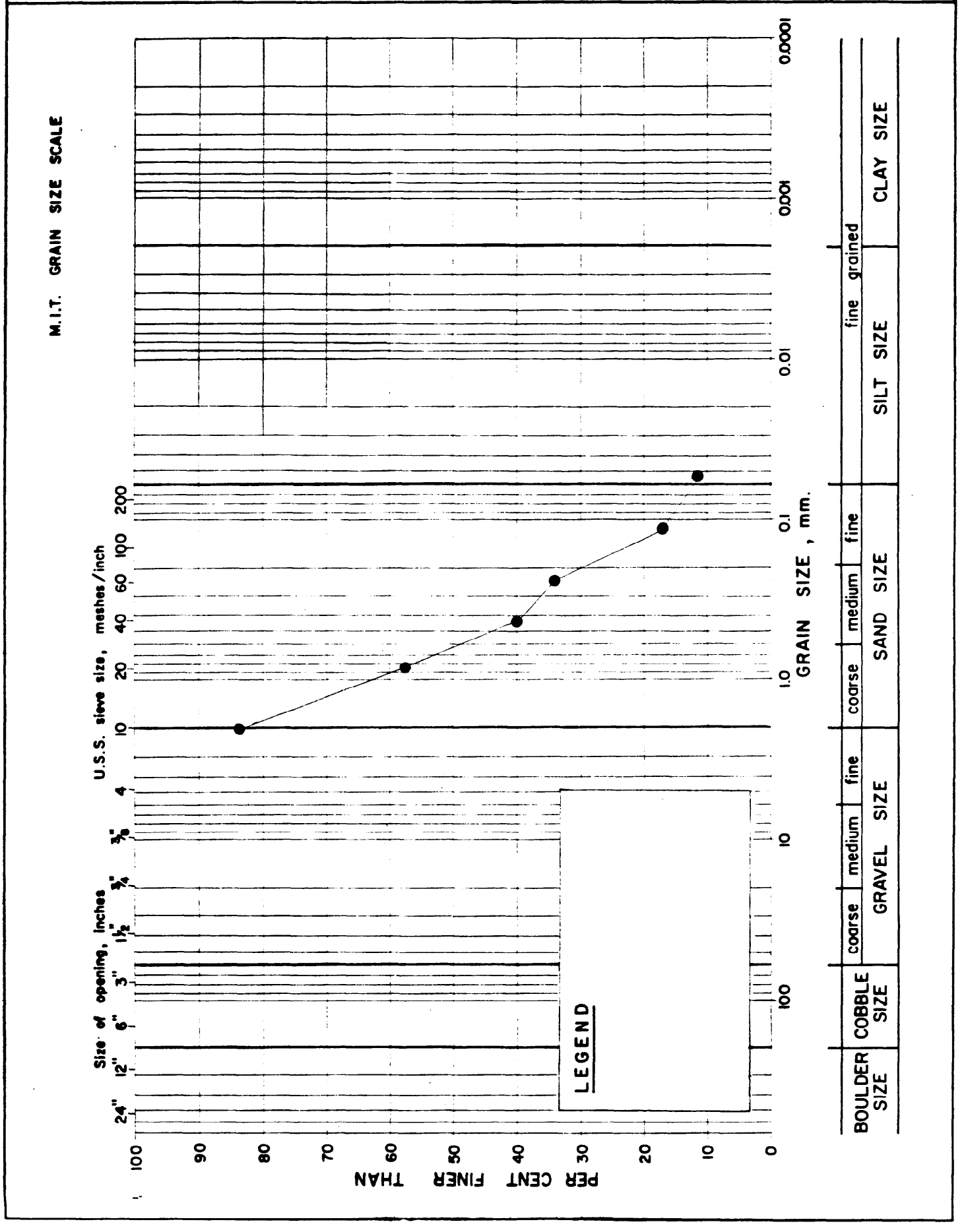

Project No. Drawn Reviewed Date

WESTON
MANAGERS DESIGNERS/CONSULTANTS

INEEL V-Tank Site Soils Data Summary:

1. Grain Size Distribution (ASTM D421-85)

Sieve Size			Sample Numbers →	1WG01401PR	1WG01402PR	1WG01501PR	1WG01601PR		
um	Mm	Std.	Depth of Samples →	10-12.5	10-12.5	15-17.5	17.5-20	Average	% Finer
74.9	0.07	<#200		10.7	11.5	10.1	19.4	12.93	
75.0	0.08	#200		4.6	4.1	2.9	4.4	4.00	12.91
106.0	0.11	#140		11.6	17.8	15.9	24.5	17.45	16.91
250.0	0.25	#60		6.3	7.5	8.9	12.4	8.78	34.36
425.0	0.43	#40		11.8	14.2	14.3	20.4	15.18	43.14
850.0	0.85	#20		22.9	27.2	28.8	17.6	24.13	58.32
2,000.0	2.00	#10		32.1	17.8	19	1.3	17.55	82.45
								100.00	
2. Dry Density (ASTM D5057-90), g/cm3									
				1.506	1.546	1.4	–	**1.53**	**95.5 pcf**
3. Percent Moisture (ASTM D2216-90), %									
				16.5	15.8	12.5	12.6	***16.15%**	

*Average % moisture does not include data from 15' – 17.5' depth in order to take a more conservative approach.

WAG-1

TSF-09/18

ISV Engineering Data

GEOTECH SOILS REPORTS

REC'D 3/27/01 from BEWI

LOCKHEED MARTIN

Lockheed Martin Idaho Technologies Company

INTERDEPARTMENTAL COMMUNICATION

Date:	September 16, 1998		
To:	John Giles	MS 3120	6-4158
From:	Edna C. Johnsen *ecj*	MS 3960	6-9705
Subject:	TRANSMITTAL OF RESULT TABLES FOR THE WAG-1 SAMPLING (V-TANKS) SAMPLING PROJECT – ECJ-04-98		

Enclosed please find the following Result Tables for the WAG-1 Sampling (V-Tanks) Project.

Inorganic

Result Table

WAG-1 Sampling (V-Tanks) – Inorganic Data (Method Validation Level C, table dated 9-15-98)

Non-Metals

Result Table

WAG-1 Sampling (V-Tanks) - Non-Metal Data (Method Validation Level C, table dated 9-16-98)

Particle Size Density

Result Table

WAG-1 Sampling (V-Tanks) – Particle Size Density (Method Validation Level C, table dated 9-17-98)

Per your request these tables were completed before all the data was received for this project. When the remainder of the data has been received, I will complete the other Result Tables and forward them to you.

Please review the enclosed table carefully. If you have any questions, or would like any changes, please do not hesitate to contact me at 526-9705 or Lotus Notes ECO.

Enclosure

cc: Carolyn S. Blackmore, MS 3953
Mary W. Hudson, MS 3960
Donna R. Kirchner (w/o Encl), MS 3960 *DRK*
WAG-1 Sampling (V-Tanks) Project File
Project File WAG1-03
Project File WAG1-04
Edna C. Johnsen File
File Code 6404

WAG-1 SAMPLING (V-TANKS) - NON-METALS DATA

AREA	TAN V-TANKS	TAN V-TANKS	TAN V-TANKS	TAN V-TANKS	TAN V-TANKS
LOCATION	D6	D6	D6	D6	D6
TYPE OF LOCATION	GRID	GRID	GRID	GRID	GRID
SAMPLE NUMBER	1WG014016T	1WG014016T	1WG01401PR	1WG01401PR	1WG014026T
MEDIA	SOIL	SOIL	SOIL	SOIL	SOIL
UNITS	%	ug/g	g/cm3	%	%
SDG NUMBER	1WG014016T	1WG014016T	1WG014016T	1WG014016T	1WG014016T
FIELD MEASUREMENT					
Depth (ft)	10-12.5	10-12.5	10-12.5	10-12.5	10-12.5
ANALYTES					
Carbon	1.3				1.0 U
Density			1.5		
Hydrogen, atomic	1.0 U				1.0 U
Nitrogen, atomic	1.0 U				1.0 U
Percent Moisture				16.5	
Total Inorganic Carbon		19300 M			
Total (Allowed) Hold Time [a]	35(28)d*				35(28)d
Total (Allowed) Hold Time [b]			27(28)d		
Total (Allowed) Hold Time [c]				22(28)d	
Total (Allowed) Hold Time [d]		34(28)d*			

a. Method deviation see RDR #LMES-ASO-002 (Carbon, Hydrogen-atomic, and Nitrogen-atomic)
b. ASTM D5057-90 (Density)
c. ASTM D2216-90 (Percent Moisture)
d. EPA Method 415.1/SW846 9060 (Total Inorganic Carbon)

9-16-98

WAG-1 SAMPLING (V-TANKS) - NON-METALS DATA (Continued)

AREA	TAN V-TANKS	TAN V-TANKS	TAN V-TANKS	TAN V-TANKS	TAN V-TANKS
LOCATION	D6	D6	D6	D6	D6
TYPE OF LOCATION	GRID	GRID	GRID	GRID	GRID
SAMPLE NUMBER	1WG014026T	1WG01402PR	1WG01402PR	1WG015016T	1WG015016T
MEDIA	SOIL	SOIL	SOIL	SOIL	SOIL
UNITS	ug/g	g/cm3	%	%	ug/g
SDG NUMBER	1WG014016T	1WG014016T	1WG014016T	1WG014016T	1WG014016T
FIELD MEASUREMENT					
Depth (ft)	10-12.5	10-12.5	10-12.5	15-17.5	15-17.5
ANALYTES					
Carbon				1.0 U	
Density		1.5			
Hydrogen, atomic				1.0 U	
Nitrogen, atomic				1.0 U	
Percent Moisture			15.8		
Total Inorganic Carbon	14000 M				17000 M
Total (Allowed) Hold Time [a]				34(28)d*	
Total (Allowed) Hold Time [b]		27(28)d			
Total (Allowed) Hold Time [c]			22(28)d		
Total (Allowed) Hold Time [d]	34(28)d*				34(28)d*

a. Method deviation see RDR #LMES-ASO-002 (Carbon, Hydrogen-atomic, and Nitrogen-atomic)
b. ASTM D5057-90 (Density)
c. ASTM D2216-90 (Percent Moisture)
d. EPA Method 415.1/SW846 9060 (Total Inorganic Carbon)

9-16-98

WAG-1 SAMPLING (V-TANKS) - NON-METALS DATA (Continued)

AREA	TAN V-TANKS	TAN V-TANKS	TAN V-TANKS	TAN V-TANKS	TAN V-TANKS
LOCATION	D6	D6	D6	D6	D6
TYPE OF LOCATION	GRID	GRID	GRID	GRID	GRID
SAMPLE NUMBER	1WG01501PR	1WG01501PR	1WG016016T	1WG016016T	1WG01601PR
MEDIA	SOIL	SOIL	SOIL	SOIL	SOIL
UNITS	G/CM3	%	%	ug/g	G/CM3
SDG NUMBER	1WG014016T	1WG014016T	1WG014016T	1WG014016T	1WG014016T
FIELD MEASUREMENT					
Depth (ft)	15-17.5	15-17.5	17.5-20	17.5-20	17.5-20
ANALYTES					
Carbon			1.0 U		
Density	1.4				1.3
Hydrogen, atomic			1.0 U		
Nitrogen, atomic			1.0 U		
Percent Moisture		12.5			
Total Inorganic Carbon				17000 M	
Total (Allowed) Hold Time [a]			35(28)d*		
Total (Allowed) Hold Time [b]	27(28)d				27(28)d
Total (Allowed) Hold Time [c]		22(28)d			
Total (Allowed) Hold Time [d]				34(28)d*	

a. Method deviation see RDR #LMES-ASO-002 (Carbon, Hydrogen-atomic, and Nitrogen-atomic)
b. ASTM D5057-90 (Density)
c. ASTM D2216-90 (Percent Moisture)
d. EPA Method 415.1/SW846 9060 (Total Inorganic Carbon)

WAG-1 SAMPLING (V-TANKS) - NON-METALS DATA (Continued)

AREA	TAN V-TANKS
LOCATION	D6
TYPE OF LOCATION	GRID
SAMPLE NUMBER	1WG01601PR
MEDIA	SOIL
UNITS	%
SDG NUMBER	1WG014016T
FIELD MEASUREMENT	
Depth (ft)	17.5-20
ANALYTES	
Carbon	
Density	
Hydrogen, atomic	
Nitrogen, atomic	
Percent Moisture	12.6
Total Inorganic Carbon	
Total (Allowed) Hold Time[a]	
Total (Allowed) Hold Time[b]	
Total (Allowed) Hold Time[c]	
Total (Allowed) Hold Time[d]	22(28)d

a. Method deviation see RDR #LMES-ASO-002 (Carbon, Hydrogen-atomic, and Nitrogen-atomic)
b. ASTM D5057-90 (Density)
c. ASTM D2216-90 (Percent Moisture)
d. EPA Method 415.1/SW846 9060 (Total Inorganic Carbon)

9-16-98

WAG-1 SAMPLING (V-TANKS) - PARTICLE SIZE DENSITY

AREA	TAN V-TANKS	TAN V-TANKS	TAN V-TANKS	TAN V-TANKS
LOCATION	D6	D6	D6	D6
TYPE OF LOCATION	GRID	GRID	GRID	GRID
SAMPLE NUMBER	1WG01401PR	1WG01402PR	1WG01501PR	1WG01601PR
MEDIA	SOIL	SOIL	SOIL	SOIL
UNITS	wt. %	wt. %	wt. %	wt. %
SDG NUMBER	1WG014016T	1WG014016T	1WG014016T	1WG014016T
FIELD MEASUREMENT	1.50 g/cm³ / 16.5%	1.46 g/cm³ / 15.8%		
Depth (ft)	10-12.5	10-12.5	15-17.5	17.5-20
ANALYTES				
<75 Microns	10.7	11.5	10.1	19.4
106 Mircons	11.6	17.8	15.9	24.5
2000 Microns (#10)	32.1	17.8	19.0	1.3
250 Microns (#60)	6.3	7.5	8.9	12.4
425 Microns (#40)	11.8	14.2	14.3	20.4
75 Microns (#200)	4.6	4.1	2.9	4.4
850 Microns (#20)	22.9	27.2	28.8	17.6
Total (Allowed) Hold Time[a]	30(28)d*	30(28)d*	30(28)d*	30(28)d*

a. ASTM D421-85

9-17-98

19 of 40

ANALYTICAL SERVICES ORGANIZATION
SAMPLE RESULTS REPORT

Date Sampled:	6/30/98	MYPHM1	*Customer Sample ID:*	**1WG01402PR** 10-12'
Date Received:	7/7/98		*Lab Sample ID:*	A981900124
Matrix:	SOIL		*COC Number:*	10377

Analyte	*Cas No.*	*Result*	*Unit*	*Q*	*Method*	*Analysis Date*	*QC Batch*	*Lab Test*
< 75 Micrometers	N3123	11.46	wt %		ASO D421-85	07/30/1998 12:00		SIEVE
106 Micrometer sieve	N3145	17.75	wt %		ASO D421-85	07/30/1998 12:00		SIEVE
2000 Micrometer sieve	N3189	17.77	wt %		ASO D421-85	07/30/1998 12:00		SIEVE
250 Micrometer sieve	N3156	7.53	wt %		ASO D421-85	07/30/1998 12:00		SIEVE
425 Micrometer sieve	N3167	14.17	wt %		ASO D421-85	07/30/1998 12:00		SIEVE
75 Micrometer sieve	N3134	4.11	wt %		ASO D421-85	07/30/1998 12:00		SIEVE
850 Micrometer sieve	N3178	27.22	wt %		ASO D421-85	07/30/1998 12:00		SIEVE

ANALYTICAL SERVICES ORGANIZATION
SAMPLE RESULTS REPORT

Date Sampled:	6/30/98	IAWETC	*Customer Sample ID:*	**1WG01402PR**
Date Received:	7/7/98		*Lab Sample ID:*	A981900124
Matrix:	SOIL		*COC Number:*	10377

Analyte	*Cas No.*	*Result*	*Unit*	*Q*	*Method*	*Analysis Date*	*QC Batch*	*Lab Test*
Density	N260	1.546	g/cm3		ASTM D5057-90	07/27/1998 10:30	QC98208032	DENSITY-I
Percent Moisture	N668	15.8	%		ASTM D2216-90	07/22/1998 12:45	QC98205006	PERCENT-MOIS

8/5/98 2:09:51 PM

ANALYTICAL SERVICES ORGANIZATION
SAMPLE RESULTS REPORT

Date Sampled:	6/30/98	MYPHM1	*Customer Sample ID:*	**1WG01401PR** 10-12.5'
Date Received:	7/7/98		*Lab Sample ID:*	A981900123
Matrix:	SOIL		*COC Number:*	10377

Analyte	*Cas No.*	*Result*	*Unit*	*Q*	*Method*	*Analysis Date*	*QC Batch*	*Lab Test*
< 75 Micrometers	N3123	10.73	wt %		ASO D421-85	07/30/1998 12:00		SIEVE
106 Micrometer sieve	N3145	11.56	wt %		ASO D421-85	07/30/1998 12:00		SIEVE
2000 Micrometer sieve	N3189	32.11	wt %		ASO D421-85	07/30/1998 12:00		SIEVE
250 Micrometer sieve	N3156	6.34	wt %		ASO D421-85	07/30/1998 12:00		SIEVE
425 Micrometer sieve	N3167	11.75	wt %		ASO D421-85	07/30/1998 12:00		SIEVE
75 Micrometer sieve	N3134	4.62	wt %		ASO D421-85	07/30/1998 12:00		SIEVE
850 Micrometer sieve	N3178	22.90	wt %		ASO D421-85	07/30/1998 12:00		SIEVE

8/5/98 3:22:18 PM

ANALYTICAL SERVICES ORGANIZATION
SAMPLE RESULTS REPORT

Date Sampled:	6/30/98	IAWETC	*Customer Sample ID:*	**1WG01401PR**
Date Received:	7/7/98		*Lab Sample ID:*	A981900123
Matrix:	SOIL		*COC Number:*	10377

Analyte	*Cas No.*	*Result*	*Unit*	*Q*	*Method*	*Analysis Date*	*QC Batch*	*Lab Test*
Density	N260	1.506	g/cm3		ASTM D5057-90	07/27/1998 10:30	QC98208032	DENSITY-I
Percent Moisture	N668	16.5	%		ASTM D2216-90	07/22/1998 12:45	QC98205006	PERCENT-MOIS

8/5/98 2:09:51 PM

TECHNICAL MEMORANDUM FOR THE WAG 3 AND WAG 10 SOILS TREATABILITY STUDY: PHYSICAL SEPARATION OF RADIONUCLIDES IN SOILS

1.0 INTRODUCTION

This technical memorandum summarizes the results of the first phase of investigation under the Waste Area Group (WAG 3) and WAG 10 Soils Treatability Study (TS). The objective of the first phase of the WAG 3 and WAG 10 TS is to demonstrate whether or not radionuclides can be mechanically separated from soils at the Idaho National Engineering Laboratory (INEL) and make recommendations for future work. If mechanical separation of radionuclides can be economically performed on soils from the INEL, then volume reduction of radioactively contaminated soil at the INEL may be a viable treatment option worthy of further consideration.

To facilitate environmental remediation efforts, the INEL is divided into 10 WAGs which are further subdivided into operable units (OUs). WAGs 1 through 9 generally correspond to INEL operational facilities (Figure 1-1), while WAG 10 corresponds to overall concerns associated with the Snake River Plain Aquifer (SRPA) in the bounds of the facility-specific WAGs. The boundary of WAG 10 is the INEL boundary, or beyond, as necessary to encompass real or potential impact from INEL activities (IDHW 1991).

Sampling was performed in areas of suspected radionuclide contamination in soils from sites inside and outside of existing OUs. Remedial Project Managers (RPMs) of the U.S. Department of Energy (DOE), Idaho Operations Office (DOE-ID), U.S. Environmental Protection Agency (EPA), Region X, and the Idaho Department of Health and Welfare (IDHW) reviewed available information regarding radionuclide contaminated soils (RCS) at the INEL that are outside existing OUs and determined sites where unacceptable risks to human health or the environment may exist. Inside OUs, areas which may have elevated radionuclide contamination in soils and could potentially pose a higher risk were selected for sampling. Surface soils between ranging in depth from 0 to 0.3 m (0 and 1 ft) below land surface (bls) were sampled from the selected locations. Physical separation of particle size fractions was achieved by wet sieving the samples. The individual particle size fractions were analyzed for radionuclide indicators and specific radionuclides. Sample aliquots were subjected to mechanical attrition and the effect of attrition on radionuclide distribution in the individual particle size fractions was evaluated.

Sample Log Number: 090313
TAN TSF-09
Particle Size Distribution — Radionuclide Distribution (pCi/g)

Sieve	Gross	Tare	Net	Wt %	Alpha	Beta	Cs-137	Avg Cs
+ 4	558.70	103.64	455.06	30.4	219.4	6711.7	8189.2	8189.2
+ 10	104.51	24.76	79.85	5.3	410.8	13063.1	13729.7	9016.3
+ 40	272.11	195.60	76.51	5.1	725.2	25315.3	28918.9	11506.8
+100	372.23	191.48	180.75	12.1	1684.7	56756.8	61081.1	22818.2
+200	354.84	194.90	159.94	10.7	2319.8	80630.6	70270.3	30789.4
+400	293.00	193.62	99.38	6.6	3238.7	111261.3	88918.9	36283.4
Fines	518.07	72.45	445.62	29.8	12342.3	416216.2	462162.2	163047.7
Total	2473.56	976.45	1497.11	100.0	4465.6	150770.8	163047.7	

Sample Log Number: 090313 after attrition
TAN TSF-09
Particle Size Distribution — Radionuclide Distribution (pCi/g)

Sieve	Gross	Tare	Net	Wt %	Alpha	Beta	Cs-137	Avg Cs
+ 4	404.79	104.30	300.49	25.4	123.0	3828.8	2864.9	2864.9
+ 10	89.16	24.30	64.86	5.5	165.8	5225.2	10162.2	4160.3
+ 40	89.67	20.79	68.88	5.8	815.3	25540.5	18864.9	6492.9
+100	334.79	192.97	141.82	12.0	1220.7	38198.2	44324.3	15806.7
+200	327.23	193.30	133.93	11.3	2121.6	68018.0	71081.1	26233.6
+400	112.17	20.53	91.64	7.7	3085.6	103603.6	120000.0	36952.9
Fines	454.41	72.15	382.26	32.3	12342.3	388738.7	464864.9	175120.3
Total	1812.22	628.34	1183.88	100.0	4698.0	148553.1	175120.3	

Average Cs = Calculated weighted average concentration of cesium for composite soil fraction greater than or equal to sieve size shown. For example, activity shown on +40 mesh line is the average activity for all materials above 40 mesh.

SIEVE DATA

7-31-98

Curtis L. Houston

REQ. NO. A982020125
MATERIAL SOIL
SAMP WT GROSS TARE

250.65 200.66

SCREEN	FULL	EMPTY	% WT
2000	170.5100	169.1600	2.70
850	180.3800	169.1600	23.64
425	179.6300	169.1600	20.94
250	175.2700	169.1600	12.22
106	182.1000	169.1600	25.89
75	171.4900	169.1600	4.66

PERCENT WEIGHT FINES 9.941994

7-31-98

CLH

SCREEN ANALYSIS

SEQ. NO.	A981900123		
MATERIAL	SOIL		
SAMP WT	GROSS	TARE	
	208.87	120.7	
SCREEN	FULL	EMPTY	% WT
2000	197.4700	169.1600	32.11
850	189.3500	169.1600	22.90
425	179.5200	169.1600	11.75
250	174.7500	169.1600	6.34
106	179.3500	169.1600	11.56
75	173.2300	169.1600	4.62

PERCENT WEIGHT FINES 10.72929

REQ. NO. A981900124
MATERIAL SOIL

SAMP WT	GROSS	TARE
	201.4	118.88

SCREEN	FULL	EMPTY	% WT
2000	183.8200	169.1600	17.77
850	191.6200	169.1600	27.22
425	180.8500	169.1600	14.17
250	175.3700	169.1600	7.53
106	183.8100	169.1600	17.75
75	172.5500	169.1600	4.11

PERCENT WEIGHT FINES 11.46391

7-31-98
CCH

SIEVE DATA

7-31-98

Curtis L. Houston

REQ. NO.	A982020125		
MATERIAL	SOIL		
SAMP WT	GROSS	TARE	
	250.65	200.66	
SCREEN	FULL	EMPTY	% WT
2000	170.5100	169.1600	2.70
850	180.3800	169.1600	23.64
425	179.6300	169.1600	20.94
250	175.2700	169.1600	12.22
106	182.1000	169.1600	25.89
75	171.4900	169.1600	4.66

PERCENT WEIGHT FINES 9.941994

7-31-98

CLH

SCREEN ANALYSIS

SEQ. NO.	A981900123		
MATERIAL	SOIL		
SAMP WT	GROSS	TARE	
	208.87	120.7	
SCREEN	FULL	EMPTY	% WT
2000	197.4700	169.1600	32.11
850	189.3500	169.1600	22.90
425	179.5200	169.1600	11.75
250	174.7500	169.1600	6.34
106	179.3500	169.1600	11.56
75	173.2300	169.1600	4.62

PERCENT WEIGHT FINES 10.72929

REQ. NO. A981900124
MATERIAL SOIL

SAMP WT	GROSS	TARE
	201.4	118.88

SCREEN	FULL	EMPTY	% WT
2000	183.8200	169.1600	17.77
850	191.6200	169.1600	27.22
425	180.8500	169.1600	14.17
250	175.3700	169.1600	7.53
106	183.8100	169.1600	17.75
75	172.5500	169.1600	4.11

PERCENT WEIGHT FINES 11.46391

7-31-98
CCH

7-31-98

CLH

SCREEN ANALYSIS
SEQ. NO. A931900129
MATERIAL SOIL
SAMP WT GROSS TARE

196.83 118.88

SCREEN	FULL	EMPTY	% WT
2000	183.9600	169.1600	18.99
350	191.6300	169.1600	28.83
425	180.3200	169.1600	14.32
250	176.1300	169.1600	8.94
106	181.5800	169.1600	15.93
75	171.4200	169.1600	2.90

PERCENT WEIGHT FINES 10.09623

7-31-98
CCH

REQ. NO. A981900132
MATERIAL SOIL

SAMP WT	GROSS	TARE	
	193.81	118.92	
SCREEN	FULL	EMPTY	% WT
2000	170.1000	169.1600	1.26
850	182.3000	169.1600	17.55
425	184.4700	169.1600	20.44
250	178.4800	169.1600	12.44
106	187.5200	169.1600	24.52
75	172.4400	169.1600	4.38

PERCENT WEIGHT FINES 19.41515

Trench Shields

Speed Shore offers the most advanced line of trench shielding products available. Built to last, these shields are designed and certified by Registered Professional Engineers to optimize strength-to-weight ratios while maintaining minimal sidewall thickness.

Standard shields are available with 3" to 8" thick walls in a full array of heights and lengths. The comprehensive line of trench shields includes economical Single-Wall Shields for less extreme lateral pressures, specially designed Manhole Shields, and the popular heavy-duty Double-Wall Shields. Complete custom capabilities are also available to analyze and optimize shields to your specific needs.

Unique Speed Shore features include: replaceable push blocks to protect the integrity of the structure, high-tensile steel reinforcement plates for added strength in critical spreader socket areas, and a variety of industry options that are included as Speed Shore *standard features*. Such features make Speed Shore trench shields the *preferred choice* for maximum productivity and safety in the trenches.

Speed Shore Shields Optimize Safety and Productivity.

- **Replaceable Push Blocks**
  protect your structure when pushing the shield to grade. Damaged sections are readily replaced with *no modification to shield structure.*
- **1/2" Steel Reinforcement Plates**
  for added strength and puncture resistance in critical spreader socket areas.
- **5 Spreader Sockets**
  (standard on most Double-Wall Shields) for optimum versatility in spreader placement.
- **Heavy-Duty Stacking Sockets**
  assure proper alignment of stacked shields.
- **Thru-Wall Spreader Sockets**
  penetrate end vertical supports for added strength and durability.
- **Easy-Access Lifting Pockets**
  for ease of handling.
- **Certification Plate**
  for quick reference to shield size, serial number and P.E.–Certified capacity.

SPEED SHORE®

PIONEERING TRENCH SAFETY

Trench Shield Features

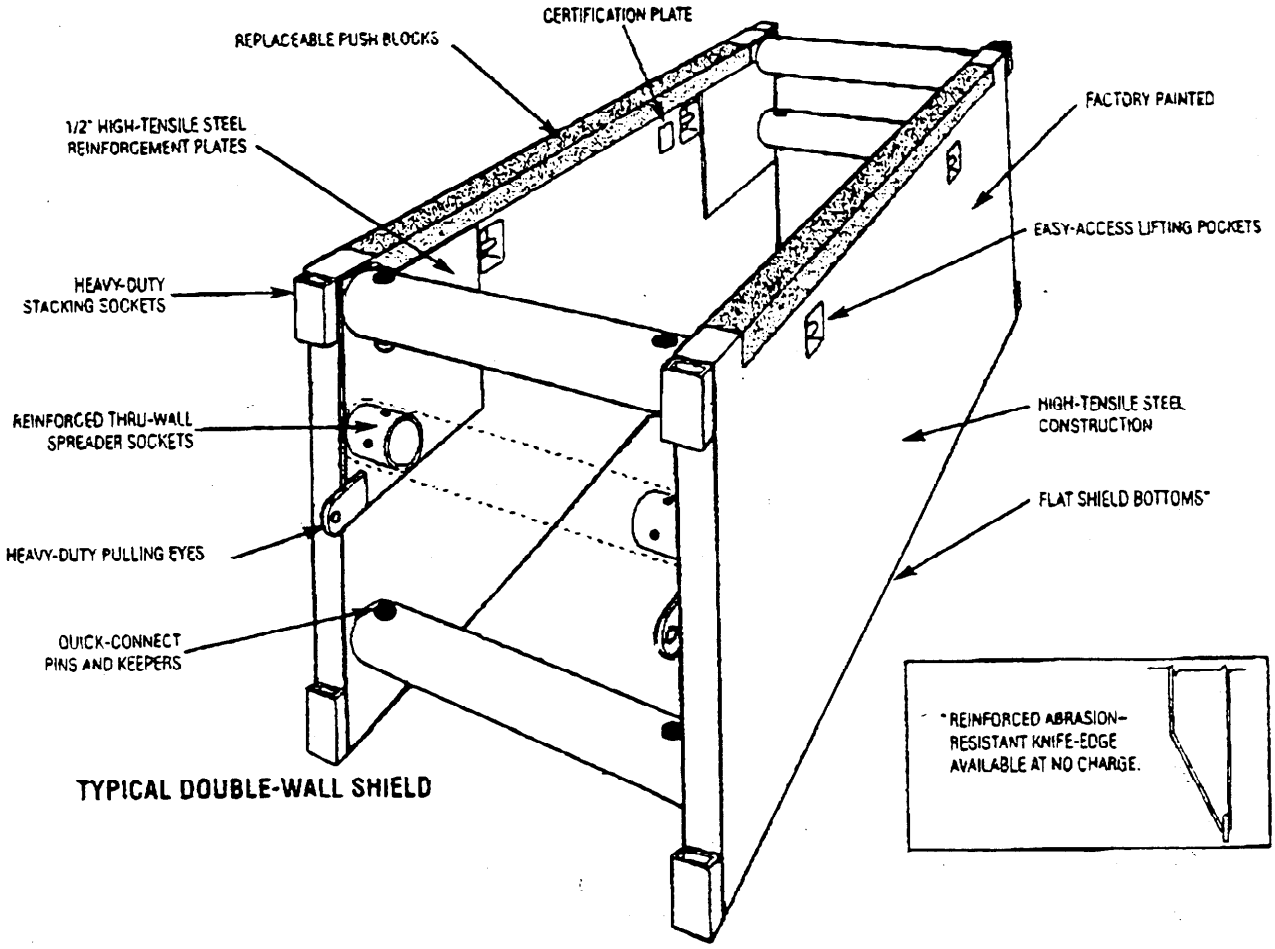

TYPICAL DOUBLE-WALL SHIELD

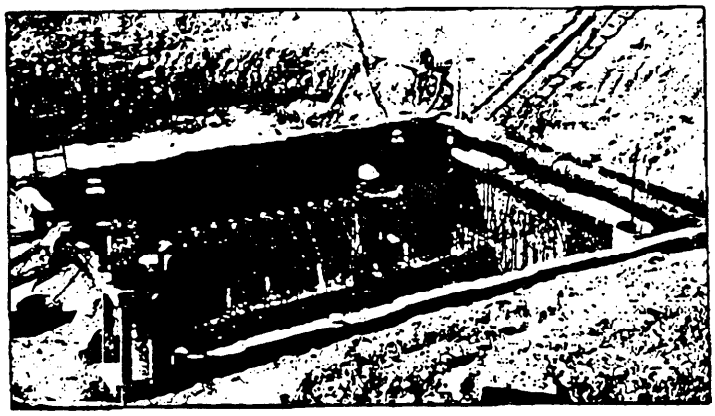

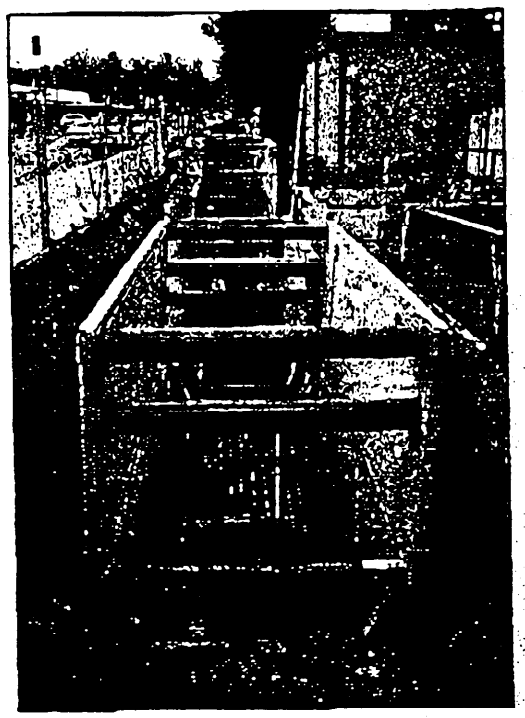

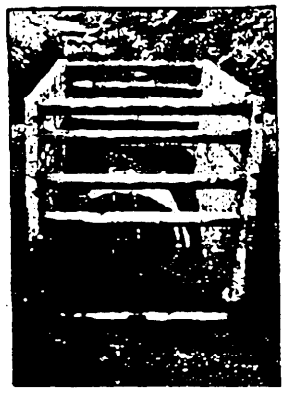

ALL SYSTEMS CERTIFIED TO MEET OSHA REGULATIONS
P.E.
CERTIFIED

Double-Wall Trench Shields

4" Double-Wall

MODEL	DIMENSIONS H (Ft.)	DIMENSIONS L	PIPE CLEARANCE (In.)	WEIGHT (Lbs.)	SHIELD CAPACITY (Psf)	ALLOWABLE DEPTH (Ft.) by soil type ** A	B	C(60)	C
TS-0408-DW4	4	8	20	2430	5540	50	50	50	50
TS-0410-DW4	4	10	20	2780	3390	50	50	50	43
TS-0412-DW4	4	12	20	3150	2280	50	50	38	29
TS-0416-DW4	4	16	20	3790	1230	47	27	21	16
TS-0420-DW4	4	20	20	4420	770	29	17	13	10
TS-0608-DW4	6	8	42	3300	4330	50	50	50	50
TS-0610-DW4	6	10	42	3840	3420	50	50	50	45
TS-0612-DW4	6	12	42	4320	2310	50	50	40	31
TS-0616-DW4	6	16	42	5785	1250	48	29	22	17
TS-0620-DW4	6	20	42	7435	880	34	20	16	13
TS-0808-DW4	8	8	62	4220	2100	50	48	37	29
TS-0810-DW4	8	10	62	4435	1680	50	39	30	24
TS-0812-DW4	8	12	62	5200	1400	50	33	26	21
TS-0816-DW4	8	16	62	7360	1250	50	30	24	19
TS-0820-DW4	8	20	62	9550	900	36	22	18	14

6" Double-Wall

MODEL	DIMENSIONS H (Ft.)	DIMENSIONS L	PIPE CLEARANCE (In.)	WEIGHT (Lbs.)	SHIELD CAPACITY (Psf)	ALLOWABLE DEPTH (Ft.) by soil type ** A	B	C(60)	C
TS-0412-DW6	4	12	20	3720	3680	50	50	50	47
TS-0416-DW6	4	16	20	4590	1990	50	44	34	26
TS-0420-DW6	4	20	20	5240	1250	48	23	22	17
TS-0424-DW6	4	24	20	6300	850	32	19	15	12
TS-0428-DW6	4	24	20	7230	620	23	14	11	9
TS-0612-DW6	6	12	42	5465	3690	50	50	50	46
TS-0616-DW6	6	16	42	6610	2000	50	50	35	27
TS-0620-DW6	6	20	42	8370	1250	49	29	23	18
TS-0624-DW6	6	24	42	9540	950	37	22	18	14
TS-0628-DW6	6	28	42	11540	740	29	17	15	11
TS-0812-DW6	8	12	65	6880	2030	50	47	36	28
TS-0816-DW6	8	16	65	8525	2000	50	48	36	28
TS-0820-DW6	8	20	65	9980	1250	50	30	24	19
TS-0824-DW6	8	24	65	12400	960	38	24	19	15
TS-0828-DW6	8	28	65	15650	790	32	20	16	13
TS-1012-DW6	10	12	86	8410	1600	50	38	30	24
TS-1016-DW6	10	16	86	10560	1200	49	31	24	19
TS-1020-DW6	10	20	86	12540	960	40	25	20	16
TS-1024-DW6	10	24	86	15035	860	35	22	18	15
TS-1028-DW6	10	28	86	19880	770	32	20	16	13

8" Double-Wall

MODEL	DIMENSIONS H (Ft.)	DIMENSIONS L	PIPE CLEARANCE (In.)	WEIGHT (Lbs.)	SHIELD CAPACITY (Psf)	ALLOWABLE DEPTH (Ft.) by soil type ** A	B	C(60)	C
TS-0420-DW8	4	20	20	6450	1800	50	40	30	24
TS-0424-DW8	4	24	20	7460	1230	47	27	21	17
TS-0428-DW8	4	28	20	8600	900	34	20	16	12
TS-0432-DW8	4	32	20	9460	680	26	15	12	10
TS-0620-DW8	6	20	42	9360	1790	50	41	31	24
TS-0624-DW8	6	24	42	10750	1220	48	28	22	17
TS-0628-DW8	6	28	42	13395	1080	48	28	22	17
TS-0632-DW8	6	32	42	14760	860	38	22	18	15
TS-0820-DW8	8	20	65	11950	1780	50	41	32	25
TS-0824-DW8	8	24	65	13260	1220	49	29	24	19
TS-0828-DW8	8	28	65	16870	1270	50	30	24	19
TS-0832-DW8	8	32	65	21890	980	39	24	19	15
TS-1020-DW8	10	20	86	14420	1320	50	33	26	21
TS-1024-DW8	10	24	86	16390	1100	47	28	22	18
TS-1028-DW8	10	28	86	18700	920	37	23	19	16
TS-1032-DW8	10	32	86	24490	870	36	22	18	15

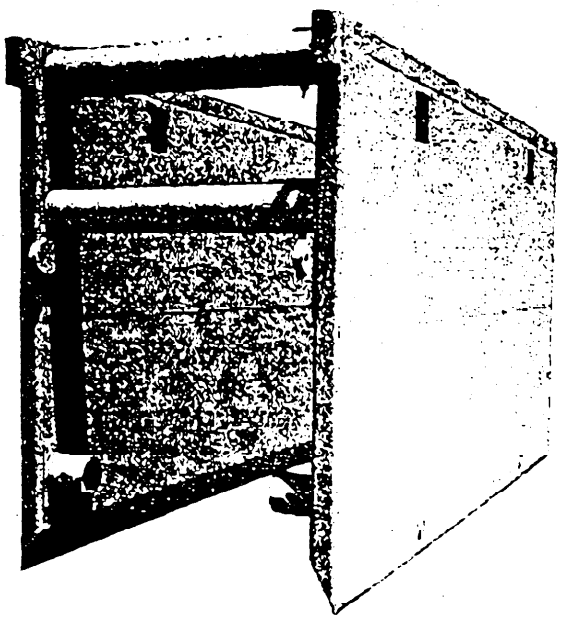

Spreader Sets*

MODEL	DESCRIPTION	WEIGHT (Lbs.)
SPR8-024	24" (2') Spreaders	350
SPR8-030	30" (2.5') Spreaders	430
SPR8-036	36" (3') Spreaders	520
SPR8-042	42" (3.5') Spreaders	610
SPR8-048	48" (4') Spreaders	695
SPR8-054	54" (4.5') Spreaders	780
SPR8-060	60" (5') Spreaders	870
SPR8-072	72" (6') Spreaders	1040
SPR8-084	84" (7') Spreaders	1215
SPR8-096	96" (8') Spreaders	1390
SPR8-108	108" (9') Spreaders	1560
SPR8-120	120" (10') Spreaders	1736
SPR8-132	132" (11') Spreaders	1910
SPR8-144	144" (12') Spreaders	2085
SPR8-156	156" (13') Spreaders	2255
SPR8-168	168" (14') Spreaders	2430
SPR8-180	180" (15') Spreaders	2600

* Includes 4 spreaders per set.

Psf = Pounds per square foot.

** Prior to use, refer to OSHA's 29 CFR, Part 1926 (subpart P) and Manufacturer's Tabulated Data for detailed explanation of soil types and product application. Type A soil not to exceed 25 Psf per foot of depth; Type B soil not to exceed 45 Psf per foot of depth; Type C(60) soil not to exceed 60 Psf per foot of depth; Type C soil not to exceed 80 Psf per foot of depth.

Note: Allowable depths are limited to 50 feet for practical purposes. Contact Speed Shore for applications exceeding posted allowable depths.

Single-Wall Trench Shields

3" Economy Single-Wall

MODEL	DIMENSIONS H (Ft.)	DIMENSIONS L	PIPE CLEARANCE (In.)	WEIGHT (Lbs.)	SHIELD CAPACITY (Psf.)	ALLOWABLE DEPTH (Ft.) by soil type ** A	B	C(60)	C
TS-0406-SW3	4	6	22	935	1700	50	38	29	22
TS-0408-SW3	4	8	22	1150	910	35	20	16	18
TS-0410-SW3	4	10	22	1395	570	21	13	10	8
TS-0412-SW3	4	12	22	1780	510	19	12	9	8
TS-0606-SW3	6	6	34	1305	1200	47	28	22	17
TS-0608-SW3	6	8	34	1655	820	32	19	15	12
TS-0610-SW3	6	10	34	1965	510	20	13	10	9
TS-0612-SW3	6	12	34	2415	430	17	11	8	6
TS-0806-SW3	8	6	46	1665	750	30	19	15	13
TS-0808-SW3	8	8	46	2055	560	23	15	12	10
TS-0810-SW3	8	10	46	2520	450	18	12	10	9
TS-0812-SW3	8	12	46	3060	380	16	11	9	8

3" Single-Wall Shields are of tubular construction. Heavy-Duty Stacking Sockets and Pulling Eyes are optional.

Psf = Pounds per square foot.

** Prior to use, refer to OSHA's 29 CFR, Part 1926 (subpart P) and Manufacturer's Tabulated Data for detailed explanation of soil types and product application. Type A soil not exceed 25 Psf per foot of depth; Type B soil not to exceed 45 Psf per foot of depth; Type C(60) soil not to exceed 60 Psf per foot of depth; Type C soil not to exceed 80 Psf per foot of depth.

Note: Allowable depths are limited to 50 feet for practical purposes. Contact Speed Shore for applications exceeding posted allowable depths.

4" Heavy-Duty Single-Wall

MODEL	DIMENSIONS H (Ft.)	DIMENSIONS L	PIPE CLEARANCE (In.)	WEIGHT (Lbs.)	SHIELD CAPACITY (Psf.)	ALLOWABLE DEPTH (Ft.) by soil type ** A	B	C(60)	C
TS-0406-SW4H	4	6	22	995	2840	50	50	48	37
TS-0408-SW4H	4	8	22	1230	1525	50	34	26	20
TS-0410-SW4H	4	10	22	1510	950	37	21	17	13
TS-0412-SW4H	4	12	22	1840	660	24	15	12	9
TS-0414-SW4H	4	14	22	2220	675	25	15	12	10
TS-0416-SW4H	4	16	22	2780	650	24	15	12	9
TS-0606-SW4H	6	6	36	1545	2080	50	48	37	28
TS-0608-SW4H	6	8	36	1875	1525	50	35	27	21
TS-0610-SW4H	6	10	36	2280	950	35	22	18	14
TS-0612-SW4H	6	12	36	2740	650	25	16	13	10
TS-0614-SW4H	6	14	36	3195	600	24	15	12	10
TS-0616-SW4H	6	16	36	3565	460	18	11	9	8
TS-0806-SW4H	8	6	46	1980	1300	50	31	26	19
TS-0808-SW4H	8	8	46	2410	980	40	24	19	15
TS-0810-SW4H	8	10	46	2940	780	32	20	16	13
TS-0812-SW4H	8	12	46	3450	650	26	17	14	11
TS-0814-SW4H	8	14	46	4055	560	23	15	12	10
TS-0816-SW4H	8	16	46	4645	430	18	12	10	9

4" Single-Wall Shields are constructed with Speed Shore's exclusive slope-faced structural design, and include Stacking Sockets and Pulling Eyes.

Psf = Pounds per square foot.

** Prior to use, refer to OSHA's 29 CFR, Part 1926 (subpart P) and Manufacturer's Tabulated Data for detailed explanation of soil types and product application. Type A soil not exceed 25 Psf per foot of depth; Type B soil not to exceed 45 Psf per foot of depth; Type C(60) soil not to exceed 60 Psf per foot of depth; Type C soil not to exceed 80 Psf per foot of depth.

Note: Allowable depths are limited to 50 feet for practical purposes. Contact Speed Shore for applications exceeding posted allowable depths.

Spreader Sets*

MODEL NO.	DESCRIPTION	WEIGHT (Lbs.)
SPR4-024	24" (2') Spreaders	90
SPR4-030	30" (2.5') Spreaders	110
SPR4-036	36" (3') Spreaders	130
SPR4-042	42" (3.5') Spreaders	150
SPR4-048	48" (4') Spreaders	175
SPR4-054	54" (4.5') Spreaders	195
SPR4-060	60" (5') Spreaders	215
SPR4-072	72" (6') Spreaders	260
SPR4-084	84" (7') Spreaders	300
SPR4-096	96" (8') Spreaders	345

*Includes 4 spreaders per set.

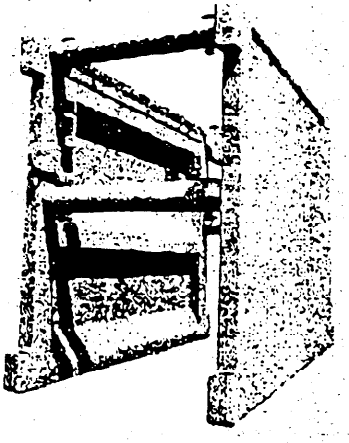

Spreader Sets*

MODEL	DESCRIPTION	WEIGHT (Lbs.)
SPR5-024	30" (2') Spreaders	165
SPR5-036	36" (3') Spreaders	250
SPR5-048	48" (4') Spreaders	330
SPR5-060	60" (5') Spreaders	415
SPR5-072	72" (6') Spreaders	500
SPR5-084	84" (7') Spreaders	580
SPR5-096	96" (8') Spreaders	665
SPR5-102	102" (9') Spreaders	750
SPR5-120	120" (10') Spreaders	830
SPR5-132	132" (11') Spreaders	915
SPR5-144	144" (12') Spreaders	995
SPR5-156	156" (13') Spreaders	1081
SPR5-168	168" (14') Spreaders	1164
SPR5-180	180" (15') Spreaders	1247

*Includes 4 spreaders per set

NES TRENCH SHORING
3655 South 700 West
Salt Lake City, UT 84119
(801) 270-5821 • Fax: 270-8175

Arch Spreaders

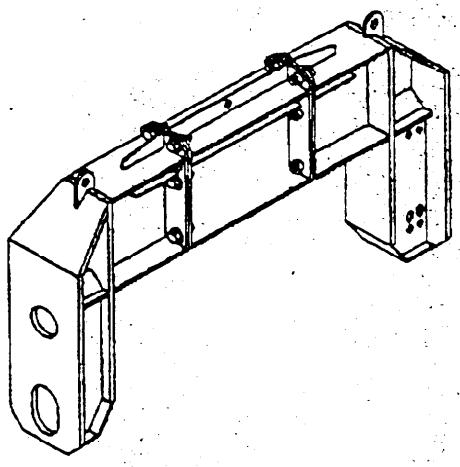

Designed for bore-pits and large-diameter pipe clearance, Speed Shore's Arch Spreaders are quick and easy to install. Available with a full range of bolt-on extensions, they simply pin in place on the standard double-wall shields to provide for exceptionally high clearances.

MODEL	DESCRIPTION	WEIGHT (Lbs.)
TS-ARCH	Basic Arch Spreader	2290
TS-ARCH-EXT01	1' Extension	150
TS-ARCH-EXT02	2' Extension	255
TS-ARCH-EXT03	3' Extension	360
TS-ARCH-EXT04	4' Extension	465
TS-ARCH-EXT05	5' Extension	565
TS-ARCH-EXT06	6' Extension	670
TS-ARCH-EXT07	7' Extension	775
TS-ARCH-EXT08	8' Extension	880
TS-ARCH-EXT09	9' Extension	985
TS-ARCH-EXT10	10' Extension	1085

The standard Arch Spreader is designed for use with 6', 8', and 10' high Speed Shore Shields.

The basic Arch Spreader will produce a 6' span between the inside walls of the shield. Extensions are available in 1' increments.

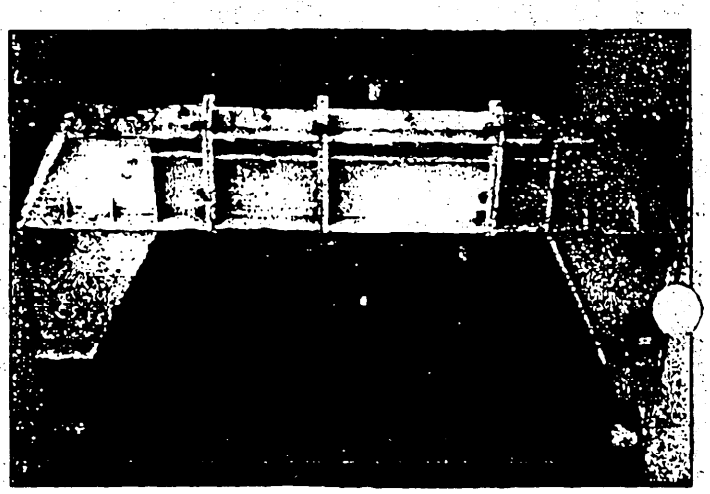

Pioneer of the World's Most Advanced Trench Safety Systems

Shoring Shields® | Vertical Shores | Waler Systems | Excavation Braces | Modular Alum. Panel Systems | Aluminum Trench Shields | Steel Trench Shields | Manhole Shields | Manguard® Shields | Slide-Rail Systems | Mega-Shore® Systems | Bedding Boxes

SPEED SHORE®
PIONEERING TRENCH SAFETY
3330 S. SAM HOUSTON PKWY E. • HOUSTON, TEXAS 77047
(713) 945-0750 • FAX (713) 943-8483 • USA TOLL FREE: 1-800-231-6662
www.speedshore.com

Authorized Distributor

NES TRENCH SHORING
3655 South 700 West
Salt Lake City, UT 84119
(801) 270-5821 • Fax: 270-8175

©Copyright USA Speed Shore