Attachment 1 – TAN Warm Shop Drum Layout and Detail of Duratek Shielded Overpack

NOTES:

REVISIONS		
REV	DESCRIPTION	EFFECTIVE DATE

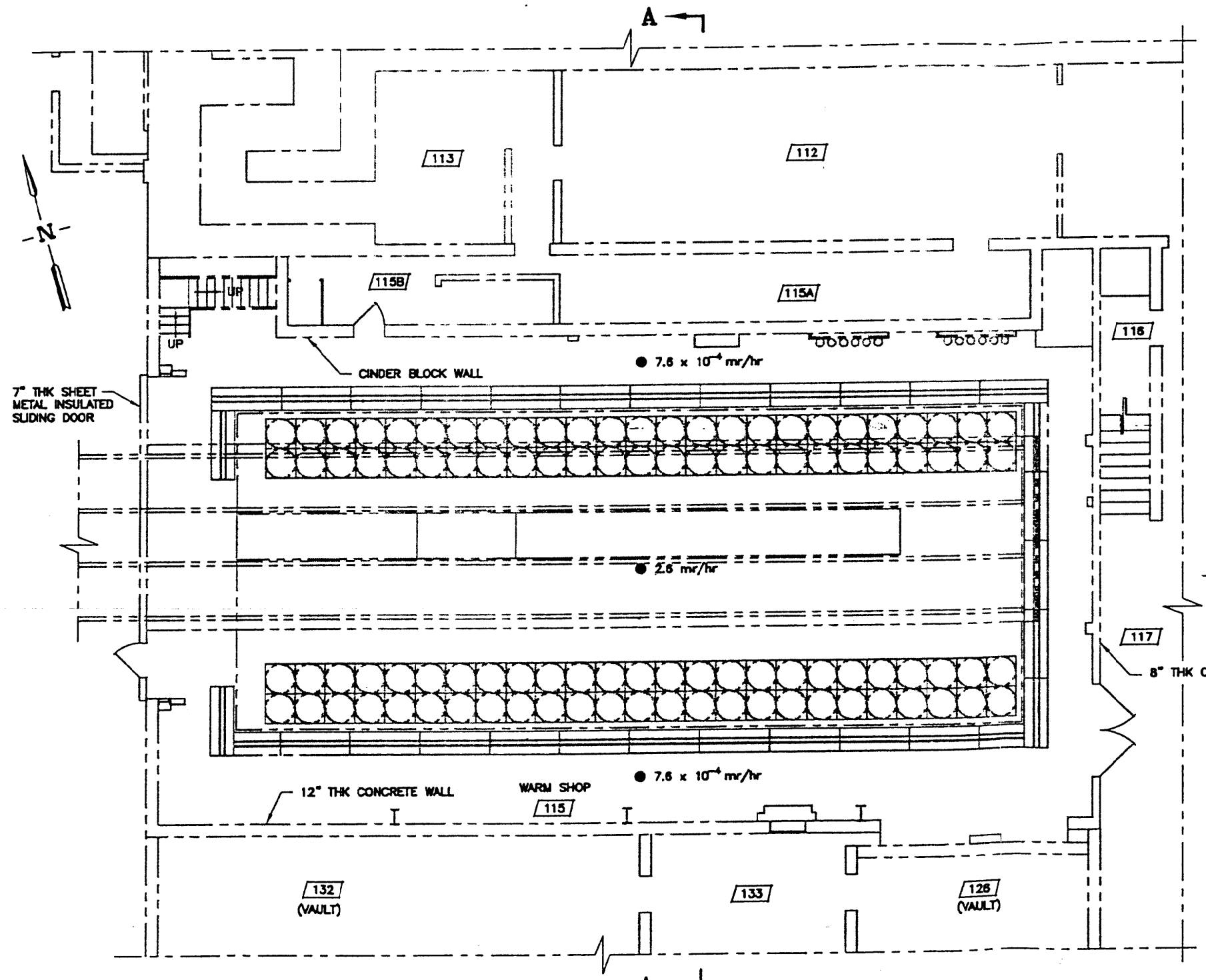

WARM SHOP PLAN

SCALE: 3/16"=1'-0"

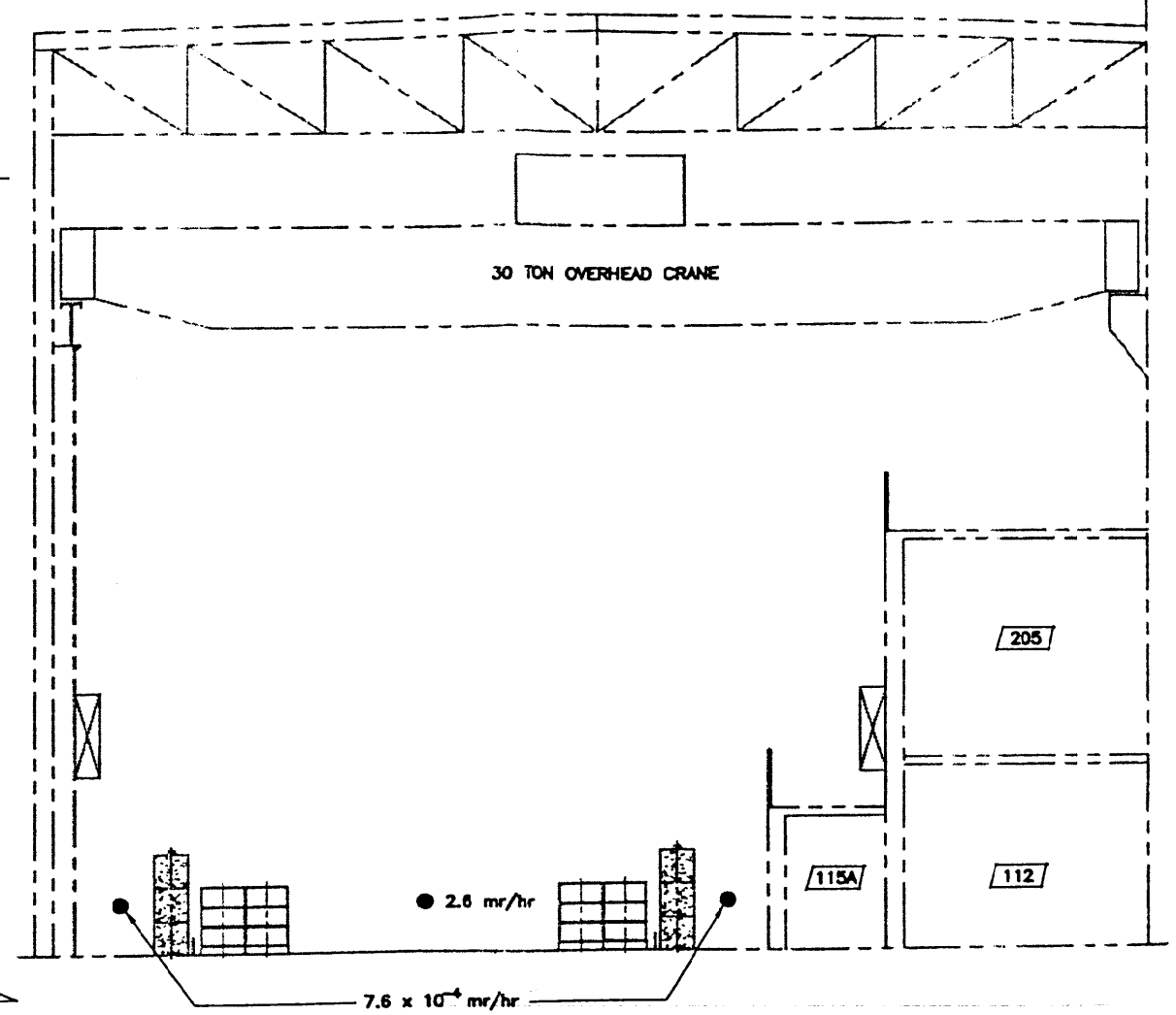

WARM SHOP SECTION A–A

SCALE: 3/16"=1'-0"

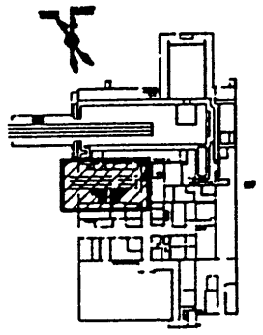

KEY PLAN

SCALE: NONE

SUBCONTRACT NO.	INEEL
REQUESTER	TAN/TSF V–TANKS SLUDGE INTERIM STORAGE PROJECT 607 WARM SHOP CALCULATED RADIOLOGICAL EXPOSURE RATES
DESIGN	
DRAWN L. K. SHAW	
PROJECT NO.	
SPEC CODE	
FOR REVIEW/APPROVAL SIGNATURES SEE DAR NO.	SIZE D · CAGE CODE 01MF3 · INDEX CODE NUMBER AREA 034 TYPE 0607 CL 00 ORIG 090 · DWG-FIG #1 · REV
EFFECTIVE DATE:	SCALE: NOTED · SHEET 1 OF 1

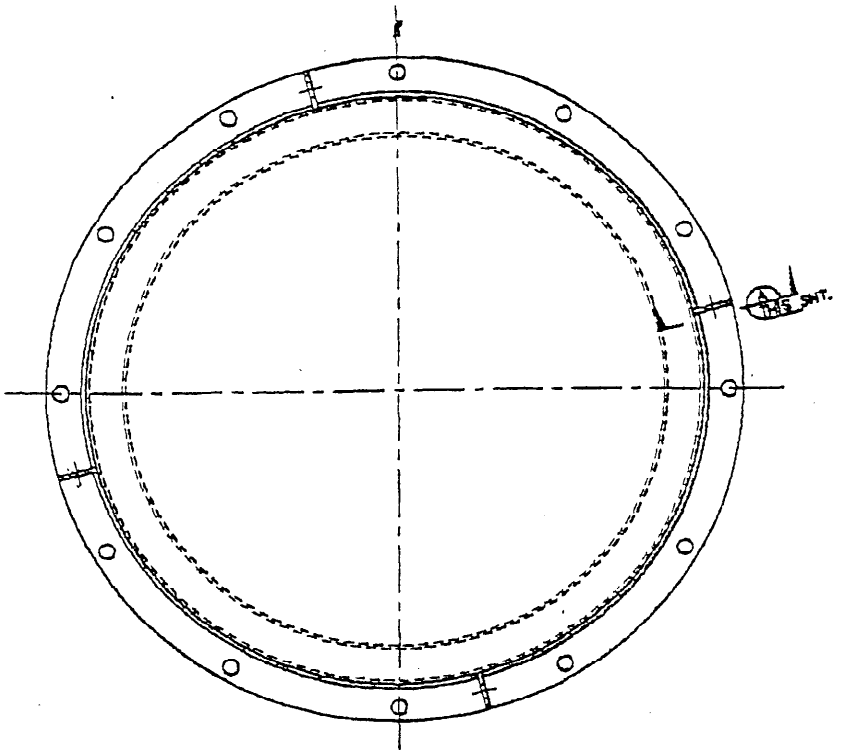

TOP VIEW

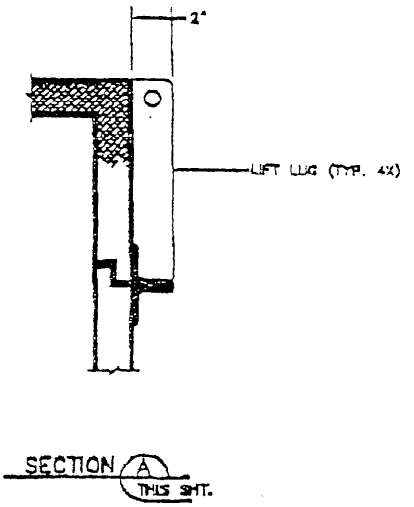

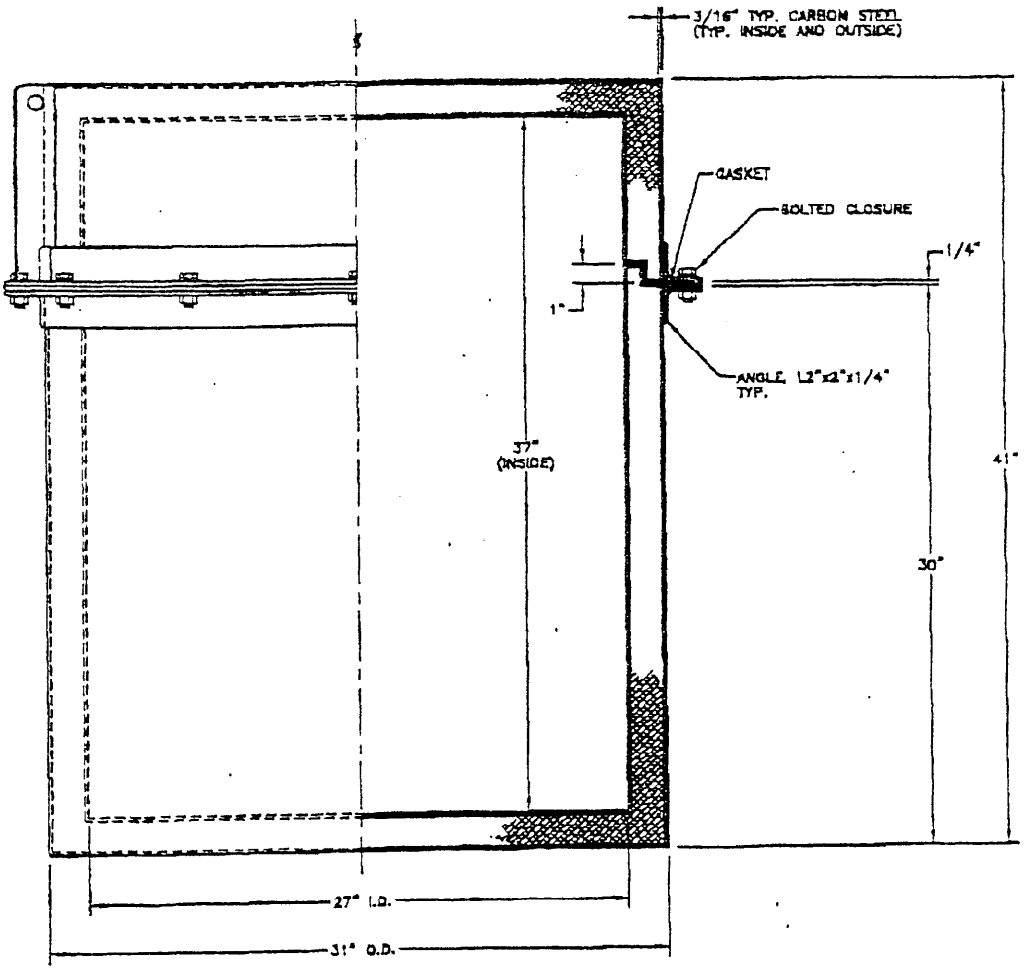

SIDE VIEW
(SHOWN AS PARTIAL SECTION)

1301012900.DWG