NODA

SUMMARY OF RISK AND HAZARD INDEX

Source	Pathway	Resident Child		Resident Adult		Commercial Worker	
		Risk	HI	Risk	HI	Risk	HI
Surficial Soil	Dermal Contact, Ingestion, and Inhalation	**0.00E+00**	**0.00E+00**	**0.00E+00**	**0.00E+00**	**0.00E+00**	**0.00E+00**
Subsurface Soil	Indoor Inhalation	0.00E+00	0.00E+00	0.00E+00	0.00E+00	0.00E+00	0.00E+00
	Outdoor Inhalation	0.00E+00	0.00E+00	0.00E+00	0.00E+00	0.00E+00	0.00E+00
	Sub-total	**0.00E+00**	**0.00E+00**	**0.00E+00**	**0.00E+00**	**0.00E+00**	**0.00E+00**
Groundwater	Ingestion	0.00E+00	0.00E+00	0.00E+00	0.00E+00	0.00E+00	0.00E+00
	Indoor Inhalation	8.14E-07	4.60E-02	5.43E-07	3.07E-02	0.00E+00	0.00E+00
	Outdoor Inhalation	8.48E-10	4.79E-05	5.66E-10	3.19E-05	0.00E+00	0.00E+00
	Sub-total	**8.15E-07**	**4.61E-02**	**5.43E-07**	**3.07E-02**	**0.00E+00**	**0.00E+00**
TOTAL		**8.15E-07**	**4.61E-02**	**5.43E-07**	**3.07E-02**	**0.00E+00**	**0.00E+00**

Chemical of Concern	CARCINOGENIC RISK FOR RESIDENT ADULT						
	Surficial Soil: Ingestion, Inhalation, and Dermal Contact	Subsurface Soil: Indoor Inhalation	Subsurface Soil: Outdoor Inhalation	Groundwater: Ingestion	Groundwater: Indoor Inhalation	Groundwater: Outdoor Inhalation	Cumulative Risk
Volatile Organic Compounds							
Benzene	NC	NC	NC	0.00E+00	1.87E-07	1.95E-10	**1.87E-07**
Toluene	NC	NC	NC	-	-	-	**0.00E+00**
Ethylbenzene	NC	NC	NC	-	-	-	**0.00E+00**
Xylenes (mixed)	NC	NC	NC	-	-	-	**0.00E+00**
Ethylene Dibromide (EDB)	NC	NC	NC	NC	NC	NC	**NC**
1,2 Dichloroethane (EDC)	NC	NC	NC	NC	NC	NC	**NC**
Methyl Tert-Butyl Ether (MTBE)	NC	NC	NC	NC	NC	NC	**NC**
PAH Compounds							
Acenapthene	NC	NC	NC	-	-	-	**0.00E+00**
Anthracene	NC	NC	NC	-	-	-	**0.00E+00**
Benzo(a)pyrene	NC	NC	NC	0.00E+00	3.01E-07	3.14E-10	**3.01E-07**
Benzo(b)fluoranthene	NC	NC	NC	0.00E+00	2.05E-08	2.14E-11	**2.05E-08**
Benzo(k)fluoranthene	NC	NC	NC	0.00E+00	2.54E-09	2.65E-12	**2.55E-09**
Benzo(a)anthracene	NC	NC	NC	0.00E+00	3.15E-08	3.29E-11	**3.16E-08**
Benzo(g,h,i)perylene	NC	NC	NC	-	-	-	**0.00E+00**
Chrysene	NC	NC	NC	0.00E+00	2.07E-10	2.16E-13	**2.07E-10**
Fluorene	NC	NC	NC	-	-	-	**0.00E+00**
Fluoranthene	NC	NC	NC	-	-	-	**0.00E+00**
Naphthalene	NC	NC	NC	-	-	-	**0.00E+00**
Phenanthrene	NC	NC	NC	-	-	-	**0.00E+00**
Pyrene	NC	NC	NC	-	-	-	**0.00E+00**
User-specified Compounds							
Try this	NC	NC	NC	NC	NC	NC	**NC**
Chemical 2	NC	NC	NC	NC	NC	NC	**NC**
Chemical 3	NC	NC	NC	NC	NC	NC	**NC**
Chemical 4	NC	NC	NC	NC	NC	NC	**NC**
Chemical 5	NC	NC	NC	NC	NC	NC	**NC**
TOTAL	**0.00E+00**	**0.00E+00**	**0.00E+00**	**0.00E+00**	**5.43E-07**	**5.66E-10**	**5.43E-07**

Chemical of Concern	HAZARD QUOTIENTS FOR RESIDENT ADULT						
	Surficial Soil: Ingestion, Inhalation, and Dermal Contact	Subsurface Soil: Indoor Inhalation	Subsurface Soil: Outdoor Inhalation	Groundwater: Ingestion	Groundwater: Indoor Inhalation	Groundwater: Outdoor Inhalation	Cumulative Hazard Index
Volatile Organic Compounds							
Benzene	NC	NC	NC	-	2.93E-02	3.05E-05	**2.94E-02**
Toluene	NC	NC	NC	0.00E+00	5.19E-04	5.40E-07	**5.19E-04**
Ethylbenzene	NC	NC	NC	0.00E+00	2.12E-04	2.20E-07	**2.12E-04**
Xylenes (mixed)	NC	NC	NC	0.00E+00	2.53E-04	2.63E-07	**2.53E-04**
Ethylene Dibromide (EDB)	NC	NC	NC	NC	NC	NC	**NC**
1,2 Dichloroethane (EDC)	NC	NC	NC	NC	NC	NC	**NC**
Methyl Tert-Butyl Ether (MTBE)	NC	NC	NC	NC	NC	NC	**NC**
PAH Compounds							
Acenapthene	NC	NC	NC	0.00E+00	1.75E-04	1.83E-07	**1.75E-04**
Anthracene	NC	NC	NC	0.00E+00	1.79E-06	1.87E-09	**1.79E-06**
Benzo(a)pyrene	NC	NC	NC	-	-	-	**0.00E+00**
Benzo(b)fluoranthene	NC	NC	NC	-	-	-	**0.00E+00**
Benzo(k)fluoranthene	NC	NC	NC	-	-	-	**0.00E+00**
Benzo(a)anthracene	NC	NC	NC	-	-	-	**0.00E+00**
Benzo(g,h,i)perylene	NC	NC	NC	0.00E+00	7.91E-05	8.27E-08	**7.92E-05**
Chrysene	NC	NC	NC	-	-	-	**0.00E+00**
Fluorene	NC	NC	NC	0.00E+00	1.54E-05	1.60E-08	**1.54E-05**
Fluoranthene	NC	NC	NC	0.00E+00	7.18E-06	7.49E-09	**7.19E-06**
Naphthalene	NC	NC	NC	0.00E+00	7.25E-05	7.55E-08	**7.25E-05**
Phenanthrene	NC	NC	NC	0.00E+00	1.12E-05	1.17E-08	**1.12E-05**
Pyrene	NC	NC	NC	0.00E+00	1.13E-05	1.17E-08	**1.13E-05**
User-specified Compounds							
Try this	NC	NC	NC	NC	NC	NC	**NC**
Chemical 2	NC	NC	NC	NC	NC	NC	**NC**
Chemical 3	NC	NC	NC	NC	NC	NC	**NC**
Chemical 4	NC	NC	NC	NC	NC	NC	**NC**
Chemical 5	NC	NC	NC	NC	NC	NC	**NC**
TOTAL	**0.00E+00**	**0.00E+00**	**0.00E+00**	**0.00E+00**	**3.07E-02**	**3.19E-05**	**3.07E-02**

Chemical of Concern	CARCINOGENIC RISK FOR RESIDENT CHILD						
	Surficial Soil: Ingestion, Inhalation, and Dermal Contact	Subsurface Soil: Indoor Inhalation	Subsurface Soil: Outdoor Inhalation	Groundwater: Ingestion	Groundwater: Indoor Inhalation	Groundwater: Outdoor Inhalation	Cumulative Risk
Volatile Organic Compounds							
Benzene	NC	NC	NC	0.00E+00	2.81E-07	2.92E-10	**2.81E-07**
Toluene	NC	NC	NC	-	-	-	**0.00E+00**
Ethylbenzene	NC	NC	NC	-	-	-	**0.00E+00**
Xylenes (mixed)	NC	NC	NC	-	-	-	**0.00E+00**
Ethylene Dibromide (EDB)	NC	NC	NC	NC	NC	NC	**NC**
1,2 Dichloroethane (EDC)	NC	NC	NC	NC	NC	NC	**NC**
Methyl Tert-Butyl Ether (MTBE)	NC	NC	NC	NC	NC	NC	**NC**
PAH Compounds							
Acenapthene	NC	NC	NC	-	-	-	**0.00E+00**
Anthracene	NC	NC	NC	-	-	-	**0.00E+00**
Benzo(a)pyrene	NC	NC	NC	0.00E+00	4.52E-07	4.71E-10	**4.52E-07**
Benzo(b)fluoranthene	NC	NC	NC	0.00E+00	3.07E-08	3.21E-11	**3.08E-08**
Benzo(k)fluoranthene	NC	NC	NC	0.00E+00	3.82E-09	3.98E-12	**3.82E-09**
Benzo(a)anthracene	NC	NC	NC	0.00E+00	4.73E-08	4.93E-11	**4.73E-08**
Benzo(g,h,i)perylene	NC	NC	NC	-	-	-	**0.00E+00**
Chrysene	NC	NC	NC	0.00E+00	3.11E-10	3.24E-13	**3.11E-10**
Fluorene	NC	NC	NC	-	-	-	**0.00E+00**
Fluoranthene	NC	NC	NC	-	-	-	**0.00E+00**
Naphthalene	NC	NC	NC	-	-	-	**0.00E+00**
Phenanthrene	NC	NC	NC	-	-	-	**0.00E+00**
Pyrene	NC	NC	NC	-	-	-	**0.00E+00**
User-specified Compounds							
Try this	NC	NC	NC	NC	NC	NC	**NC**
Chemical 2	NC	NC	NC	NC	NC	NC	**NC**
Chemical 3	NC	NC	NC	NC	NC	NC	**NC**
Chemical 4	NC	NC	NC	NC	NC	NC	**NC**
Chemical 5	NC	NC	NC	NC	NC	NC	**NC**
TOTAL	**0.00E+00**	**0.00E+00**	**0.00E+00**	**0.00E+00**	**8.14E-07**	**8.48E-10**	**8.15E-07**

Chemical of Concern	HAZARD QUOTIENTS FOR RESIDENT CHILD						
	Surficial Soil: Ingestion, Inhalation, and Dermal Contact	Subsurface Soil: Indoor Inhalation	Subsurface Soil: Outdoor Inhalation	Groundwater: Ingestion	Groundwater: Indoor Inhalation	Groundwater: Outdoor Inhalation	Cumulative Hazard Index
Volatile Organic Compounds							
Benzene	NC	NC	NC	-	4.40E-02	4.58E-05	**4.41E-02**
Toluene	NC	NC	NC	0.00E+00	7.78E-04	8.10E-07	**7.79E-04**
Ethylbenzene	NC	NC	NC	0.00E+00	3.17E-04	3.30E-07	**3.18E-04**
Xylenes (mixed)	NC	NC	NC	0.00E+00	3.79E-04	3.94E-07	**3.79E-04**
Ethylene Dibromide (EDB)	NC	NC	NC	NC	NC	NC	**NC**
1,2 Dichloroethane (EDC)	NC	NC	NC	NC	NC	NC	**NC**
Methyl Tert-Butyl Ether (MTBE)	NC	NC	NC	NC	NC	NC	**NC**
PAH Compounds							
Acenapthene	NC	NC	NC	0.00E+00	2.63E-04	2.74E-07	**2.63E-04**
Anthracene	NC	NC	NC	0.00E+00	2.68E-06	2.80E-09	**2.69E-06**
Benzo(a)pyrene	NC	NC	NC	-	-	-	**0.00E+00**
Benzo(b)fluoranthene	NC	NC	NC	-	-	-	**0.00E+00**
Benzo(k)fluoranthene	NC	NC	NC	-	-	-	**0.00E+00**
Benzo(a)anthracene	NC	NC	NC	-	-	-	**0.00E+00**
Benzo(g,h,i)perylene	NC	NC	NC	0.00E+00	1.19E-04	1.24E-07	**1.19E-04**
Chrysene	NC	NC	NC	-	-	-	**0.00E+00**
Fluorene	NC	NC	NC	0.00E+00	2.30E-05	2.40E-08	**2.31E-05**
Fluoranthene	NC	NC	NC	0.00E+00	1.08E-05	1.12E-08	**1.08E-05**
Naphthalene	NC	NC	NC	0.00E+00	1.09E-04	1.13E-07	**1.09E-04**
Phenanthrene	NC	NC	NC	0.00E+00	1.69E-05	1.76E-08	**1.69E-05**
Pyrene	NC	NC	NC	0.00E+00	1.69E-05	1.76E-08	**1.69E-05**
User-specified Compounds							
Try this	NC	NC	NC	NC	NC	NC	**NC**
Chemical 2	NC	NC	NC	NC	NC	NC	**NC**
Chemical 3	NC	NC	NC	NC	NC	NC	**NC**
Chemical 4	NC	NC	NC	NC	NC	NC	**NC**
Chemical 5	NC	NC	NC	NC	NC	NC	**NC**
TOTAL	**0.00E+00**	**0.00E+00**	**0.00E+00**	**0.00E+00**	**4.60E-02**	**4.79E-05**	**4.61E-02**

SUMMARY OF REPRESENTATIVE CONCENTRATIONS OF CHEMICALS IN SOIL AND GROUNDWATER

Chemical of Concern	Surficial Soil			Subsurface Soil			Groundwater			CRF unsat. zone [-]	Loading to Groundwater (from External Model)	
	Conc. [mg/kg]	No. of Samples	Method of Calculation	Conc. [mg/kg]	No. of Samples	Method of Calculation	Conc. [mg/L]	No. of Samples	Method of Calculation		Wet Soil Conc. [mg/kg]	Mass Loading [g/yr]
Volatile Organic Compounds												
☑ Benzene	0.001	1		0	0		1			1	1	35.01
☑ Toluene	0.008	1		0	0		1			1	1	27.44
☑ Ethylbenzene	0.001	1		0	0		1			1	1	10.79
☑ Xylenes (mixed)	0.007	1		0	0		1			1	1	11.42
☐ Ethylene Dibromide (EDB)	0	0		0	0		1			1	1	70.12
☐ 1,2 Dichloroethane (EDC)	0	0		0	0		1			1	1	65.41
☐ Methyl Tert-Butyl Ether (MTBE)	0	0		0	0		1			1	1	70.33
PAH Compounds												
☑ Acenapthene	0.264	1		0	0		1			1	1	3.98
☑ Anthracene	0.24	1		0	0		1			1	1	
☑ Benzo(a)pyrene	0.01008	1		0	0		1			1	1	
☑ Benzo(b)fluoranthene	0.002328	1		0	0		1			1	1	
☑ Benzo(k)fluoranthene	0.00234	1		0	0		1			1	1	
☑ Benzo(a)anthracene	0.00804	1		0	0		1			1	1	
☑ Benzo(g,h,i)perylene	0.00048	1		0	0		1			1	1	
☑ Chrysene	0.00054	1		0	0		1			1	1	
☑ Fluorene	1.8	1		0	0		1			1	1	3.98
☑ Fluoranthene	0.24	1		0	0		1			1	1	
☑ Naphthalene	9.6	1		0	0		1			1	1	16.82
☑ Phenanthrene	3.6	1		0	0		1			1	1	2.11
☑ Pyrene	0.18	1		0	0		1			1	1	
User-specified Compounds												
☐ Try this												
☐ Chemical 2												
☐ Chemical 3												
☐ Chemical 4												
☐ Chemical 5												

Note: See Guidance Document or discuss with IDEQ Project Officer for definition of Representative Concentrations
CRF = Concentration Reduction Factor. Refer to Guidance Document for details. Default value = 1

FATE AND TRANSPORT PARAMETERS FOR PATHWAYS

Parameter	Symbol	Units	Tier 1 Default Values	Values Used	Comment
Page 1 of 2					
SITE PARAMETERS:					
Source Area	A	cm^2	2250000	2250000	=Tier 1
Width of Source Area	W	cm	1500	1500	=Tier 1
Depth to Subsurface Soil Sources	Ls	ft	3 or 15	3	=Tier 1
Thickness of Subsurface Soil Source	ds	ft	6	6	=Tier 1
AMBIENT AIR PARAMETERS:					
Ambient Air Mixing Zone Height	δ_a	cm	200	200	=Tier 1
Wind Speed in Ambient Air Mixing Zone	Ua	cm/s	225	225	=Tier 1
Averaging Time for Vapor Flux - Residential	τ	sec	283800000	283800000	=Tier 1
Averaging Time for Vapor Flux - Commercial	τ	sec	126130000	126130000	=Tier 1
SOIL PARAMETERS:					
Dry Soil Bulk Density	ρ_s	g/cm^3	1.64	1.8	Justification Req.'d
Fractional Organic Carbon Content					
Surficial Soil	foc	g-C/g-soil	0.01	0.01	=Tier 1
Subsurface Soil	foc	g-C/g-soil	0.001	0.001	=Tier 1
Thickness of Capillary Fringe	hcapi	cm	5	5	=Tier 1
Thickness of Vadose Zone	hv	cm	variable	12795	Calculated
Total Soil Porosity	θ_T	-	0.38	0.3	Justification Req.'d
Volumetric Water Content in Capillary Fringe	θ_{wcap}	-	0.342	0.28	Justification Req.'d
Volumetric Water Content in Vadose Zone	θ_{ws}	-	0.21 / 0.26	0.21	=Tier 1
Volumetric Water Content in Foundation/Wall Cracks	θ_{wcrack}	-	0.21 / 0.26	0.21	=Tier 1
Volumetric Air Content in Capillary Fringe	θ_{acap}	-	0.038	0.02	Calculated
Volumetric Air Content in Vadose Zone	θ_{as}	-	0.17 / 0.12	0.09	Calculated
Volumetric Air Content in Foundation/Wall Cracks	θ_{acrack}	-	0.17 / 0.12	0.09	Calculated

FATE AND TRANSPORT PARAMETERS FOR PATHWAYS

Parameter	Symbol	Units	Tier 1 Default Values	Values Used	Comment
Page 2 of 2					
GROUNDWATER PARAMETERS:					
Depth to Groundwater	Lgw	cm	variable	12800	Calculated
Total Soil Porosity in the Saturated Zone	θ_T	-	0.38	0.38	=Tier 1
Dry Soil Bulk Density in the Saturated Zone	ρ_s	g/cm^3	1.64	1.8	Justification Req'd
Fractional Organic Carbon Content in the Sat. Zone	foc	g-C/g-soil	0.001	0.001	=Tier 1
Dispersivities for Groundwater Modeling					
Longitudinal	α_x	cm	variable	304.8	Calculated
Transverse	α_y	cm	variable	101.6	Calculated
Vertical	α_z	cm	variable	15.24	Calculated
Dispersivities for Surface Water Modeling					
Longitudinal	α_x	cm	variable	609.6	Calculated
Transverse	α_y	cm	variable	203.2	Calculated
Vertical	α_z	cm	variable	30.48	Calculated
Groundwater Darcy Velocity	Ugw	cm/year	Zone-specific	585	Zone-specific
Groundwater Mixing Zone Thickness	δ_{gw}	cm	152	152	=Tier 1
Infiltration Rate of Water through Soil	IR	cm/year	Zone-specific	4.3	Zone-specific
ENCLOSED SPACE PARAMETERS:					
Enclosed Space Air Exchange Rate:					
Residential	ER	1/sec	0.00014	0.00014	=Tier 1
Commercial	ER	1/sec	0.00023	0.00023	=Tier 1
Enclosed Space Volume/Infiltration Area Ratio:					
Residential	Lb	cm	200	200	=Tier 1
Commercial	Lb	cm	300	300	=Tier 1
Enclosed Space Foundation or Wall Thickness					
Residential	Lcrack	cm	15	15	=Tier 1
Commercial	Lcrack	cm	15	15	=Tier 1
Areal Fraction of Cracks in Foundation/Walls					
Residential	η	-	0.01	0.01	=Tier 1
Commercial	η	-	0.01	0.01	=Tier 1

Ref.: IDEQ, 1996. RBCA Guidance Document for Petroleum Releases

EXPOSURE PARAMETERS FOR ROUTES OF EXPOSURE

Parameter	Symbol	Units	Tier 1 Default Values	Values Used	Comment
Page 1 of 2					
GLOBAL PARAMETERS:					
Acceptable Risk Level	TR	-	1.00E-06	1.00E-06	=Tier 1
Acceptable Hazard Quotient (Tier 1) / Index (Tier 2)	THQ/THI	-	0.2	1	= Tier 2
Body Weight - Adult	BW	kg	70	70	=Tier 1
Body Weight - Child	BW	kg	35	35	=Tier 1
ROUTE-SPECIFIC PARAMETERS:					
INGESTION OF, DERMAL CONTACT WITH, AND INHALATION OF VAPORS FROM SURFICIAL SOIL					
Exposure Duration:					
Residential - Adult	ED	year	9	9	=Tier 1
Residential - Child	ED	year	9	9	=Tier 1
Commercial	ED	year	4	4	=Tier 1
Exposure Frequency:					
Residential - Adult	EF	day/year	180	180	=Tier 1
Residential - Child	EF	day/year	180	180	=Tier 1
Commercial	EF	day/year	40	40	=Tier 1
Inhalation Rate:					
Residential - Adult	IRa	m^3/day	20	20	=Tier 1
Residential - Child	IRa	m^3/day	15	15	=Tier 1
Commercial	IRa	m^3/day	20	20	=Tier 1
Ingestion Rate:					
Residential - Adult	IRs	mg/day	100	100	=Tier 1
Residential - Child	IRs	mg/day	200	200	=Tier 1
Commercial	IRs	mg/day	50	50	=Tier 1
Soil to Skin Adherence Factor	M	mg/cm^2	1	1	=Tier 1
Skin Surface Area:					
Residential - Adult	SA	cm^2/day	4538	4538	=Tier 1
Residential - Child	SA	cm^2/day	2328	2328	=Tier 1
Commercial	SA	cm^2/day	1815	1815	=Tier 1

EXPOSURE PARAMETERS FOR ROUTES OF EXPOSURE

Parameter	Symbol	Units	Tier 1 Default Values	Values Used	Comment
Page 2 of 2					
INHALATION OF VAPORS FROM SUBSURFACE SOIL AND GROUNDWATER					
Inhalation Rate:					
Residential - Adult	IRa	m^3/day	20	20	=Tier 1
Residential - Child	IRa	m^3/day	15	15	=Tier 1
Commercial	IRa	m^3/day	20	20	=Tier 1
Exposure Duration:					
Residential - Adult	ED	year	9	9	=Tier 1
Residential - Child	ED	year	9	9	=Tier 1
Commercial	ED	year	4	4	=Tier 1
Exposure Frequency:					
Residential - Adult	EF	day/year	350	350	=Tier 1
Residential - Child	EF	day/year	350	350	=Tier 1
Commercial	EF	day/year	250	250	=Tier 1
INGESTION OF GROUNDWATER					
Ingestion Rate:					
Residential - Adult	IRw	L/day	1.4	1.4	=Tier 1
Residential - Child	IRw	L/day	1	1	=Tier 1
Commercial	IRw	L/day	1	1	=Tier 1
Exposure Duration:					
Residential - Adult	ED	year	9	9	=Tier 1
Residential - Child	ED	year	9	9	=Tier 1
Commercial	ED	year	4	4	=Tier 1
Exposure Frequency:					
Residential - Adult	EF	day/year	350	350	=Tier 1
Residential - Child	EF	day/year	350	350	=Tier 1
Commercial	EF	day/year	250	250	=Tier 1

Ref: IDEQ, 1996. RBCA Guidance Document for Petroleum Releases

COMPLETE PATHWAY(S) AND ROUTE(S) OF EXPOSURE

Receptor, Source, and Route	Residential (Child and Adult)	Commercial
Surficial Soil (Ingestion, Inhalation, and Dermal Contact)	☐ NO	☐ NO
Subsurface Soil		
Outdoor Inhalation of Volatile Emission	☐ NO	☐ NO
Indoor Inhalation of Volatile Emission	☐ NO	☐ NO
Groundwater		
Outdoor Inhalation of Volatile Emission	☑ YES	☐ NO
Indoor Inhalation of Volatile Emission	☑ YES	☐ NO
Protection of Groundwater	☑ YES	☐ NO
Distance to the Target Well [ft] 100.0		
Groundwater Class: ○ 1 ◉ 2 ○ 3		
Estimation of groundwater source concentration (choose 1 of the 3 options)		
1. Known Subsurface Soil Conc. and known CRFunsaturated ◉		
2. Specified Loading from an External Model ○		
3. Known On-site (Source) Groundwater Concentration ○		
Protection of Surface Water		☐ NO
Distance to the Target Surface Water [ft] 200.0		
Surface Water Class: ◉ Domestic Water Supplies ○ Other		
Estimation of groundwater source concentration (choose 1 of the 3 options)		
1. Known Subsurface Soil Conc. and known CRFunsaturated ◉		
2. Specified Loading from an External Model ○		
3. Known On-site (Source) Groundwater Concentration ○		

EBR Down-Gradient Wells

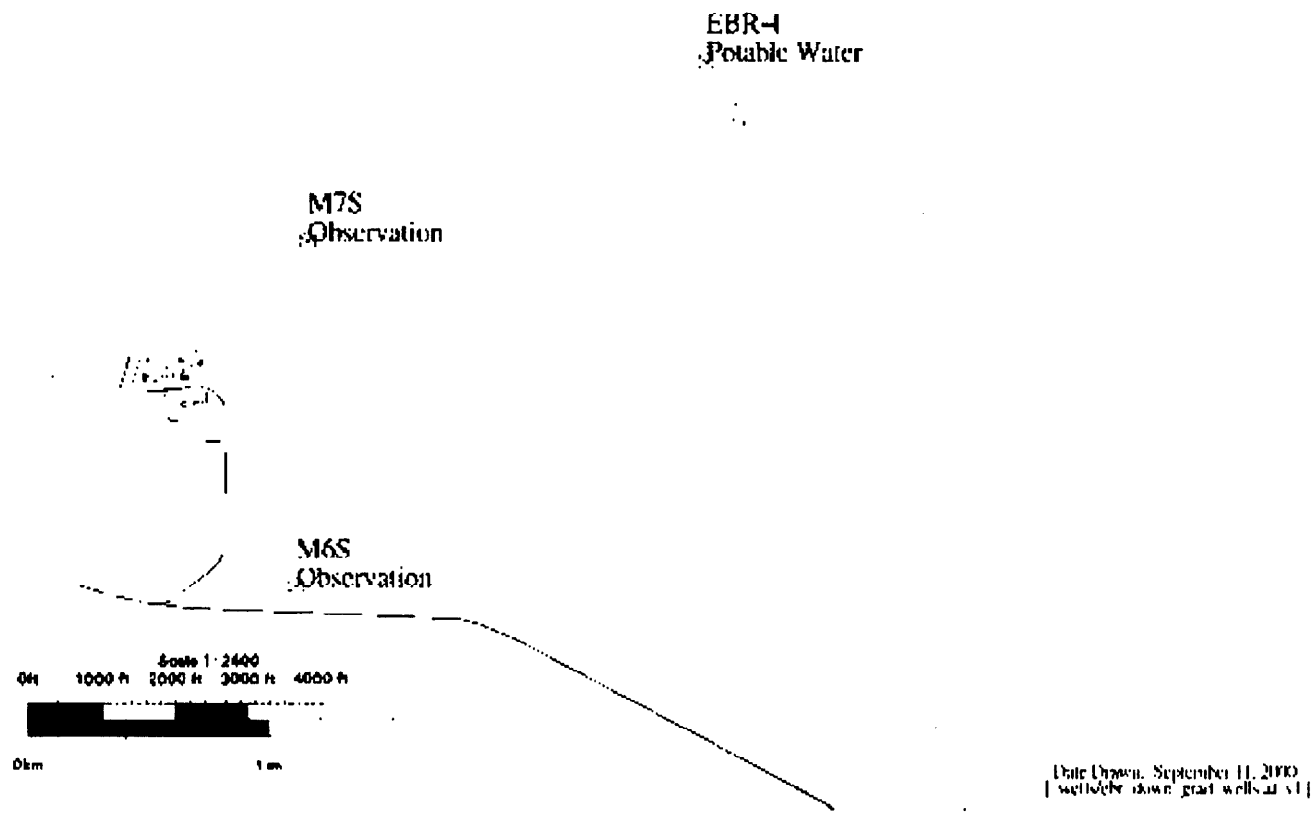

ration: 00:00:09

Case Title: Borax II-IV
Description: Contaminated Soil that was added to the RX Pit
Geometry: 13 - Rectangular Volume

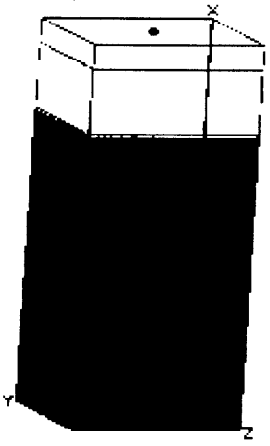

Source Dimensions

Length	548.64 cm	18 ft
Width	289.56 cm	9 ft 6.0 in
Height	335.28 cm	11 ft

Dose Points

	X	Y	Z
# 1	721.36 cm	167.14 cm	144.68 cm
	23 ft 8.0 in	5 ft 5.8 in	4 ft 9.0 in

Shields

Shield Name	Dimension	Material	Density
Source	5.33e+07 cm³	Concrete	1.5
Shield 1	5.08 cm	Iron	7.86
Shield 2	121.92 cm	Concrete	1.5
Shield 3	45.72 cm	Concrete	2.35
Air Gap		Air	0.00122

Source Input
Grouping Method : Standard Indices
Number of Groups : 25
Lower Energy Cutoff : 0.015
Photons < 0.015 : Excluded
Library : Grove

Nuclide	curies	becquerels	µCi/cm³	Bq/cm³
Ba 137m	1.3622e+003	5.0403e+007	2.5575e-005	9.4628e-001
Co-60	1.8900e-004	6.9930e+006	3.5484e-006	1.3129e-001
Cs-137	1.4400e-003	5.3280e+007	2.7035e-005	1.0003e+000
Eu-152	2.1600e-004	7.9920e+006	4.0553e-006	1.5005e-001

Buildup
The material reference is : Shield 1

Integration Parameters

X Direction	10
Y Direction	20
Z Direction	20

Results

Energy MeV	Activity photons/sec	Fluence Rate MeV/cm²/sec No Buildup	Fluence Rate MeV/cm²/sec With Buildup	Exposure Rate mR/hr No Buildup	Exposure Rate mR/hr With Buildup
0.03	2.969e+06	3.434e-292	4.520e-28	3.403e-294	4.480e-30
0.04	5.429e+06	2.910e-139	1.264e-27	1.287e-141	5.590e-30

MeV	photons/sec	MeV/cm²/sec No Buildup	MeV/cm²/sec With Buildup	mR/hr No Buildup	mR/hr With Buildup
0.1	2.272e+06	3.803e-32	4.521e-27	5.818e-35	6.917e-30
0.2	5.989e+05	8.773e-23	3.510e-21	1.548e-25	6.195e-24
0.3	2.161e+06	4.152e-19	3.692e-17	7.876e-22	7.003e-20
0.4	5.022e+05	6.208e-18	3.664e-16	1.599e-20	1.883e-18
0.5	4.508e+04	1.870e-17	2.103e-15	3.670e-20	4.129e-18
0.6	4.569e+07	2.357e-13	2.314e-11	4.601e-16	4.517e-14
0.8	1.423e+06	3.260e-13	2.259e-11	6.200e-15	4.297e-14
1.0	1.041e+07	3.875e-11	1.936e-09	7.143e-14	3.568e-12
1.5	8.847e+06	3.495e-09	9.665e-08	5.880e-12	1.626e-10
TOTALS:	8.153e+07	3.534e-09	9.863e-08	5.953e-12	1.663e-10

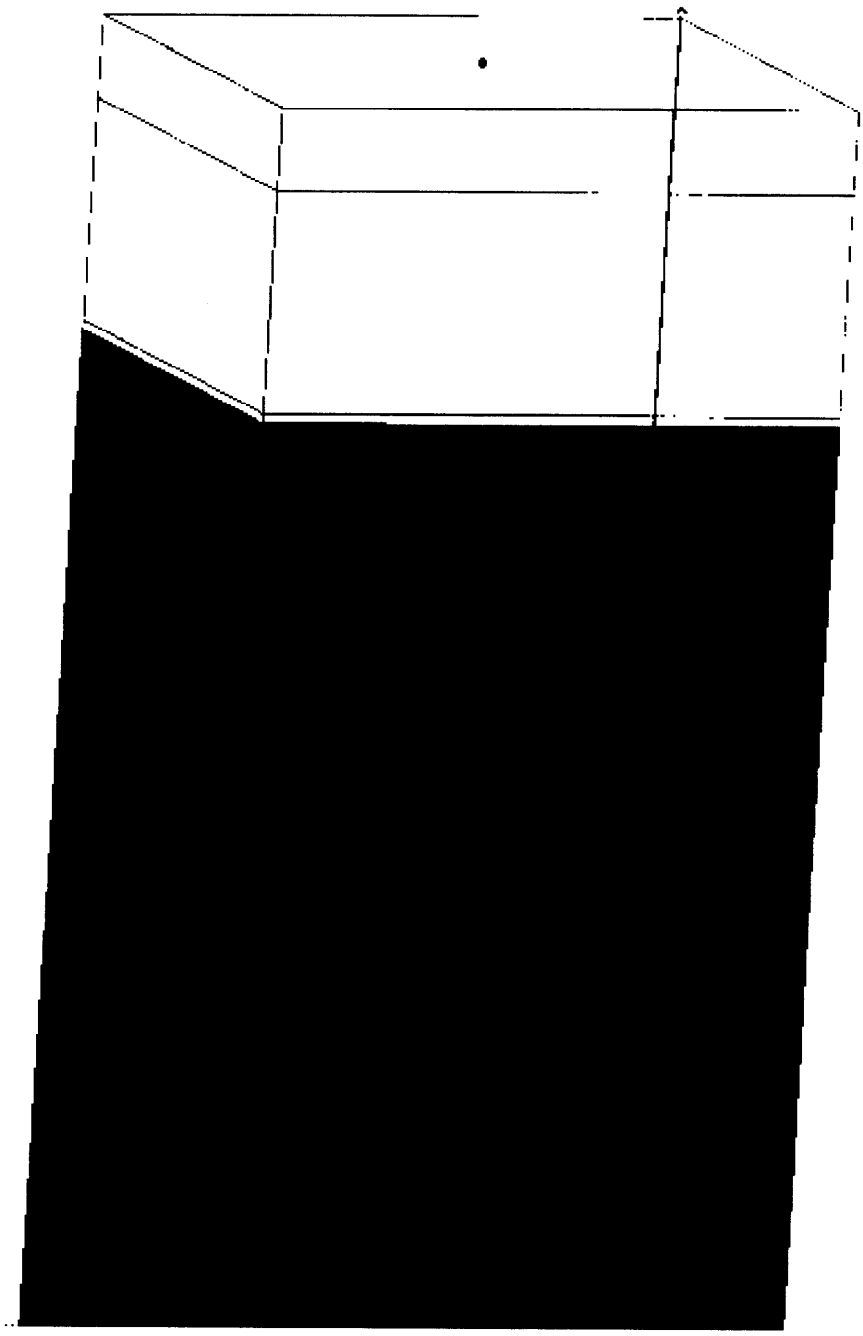

ration: 00:00:00

Case Title: Borax II-IV
Description: Borax Scenario using org Source Terms
Geometry: 8 - Cylinder Volume - End Shields

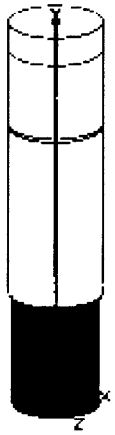

Source Dimensions

Height	182.88 cm	6 ft
Radius	67.75 cm	2 ft 2.7 in

Dose Points

	X	Y	Z
# 1	0 cm	629.92 cm	0 cm
	0.0 in	22 ft 8.0 in	0.0 in

Shields

Shield Name	Dimension	Material	Density
Source	2.64e+06 cm³	Iron	7.86
Shield 1	274.32 cm	Concrete	1.5
Shield 2	5.08 cm	Iron	7.86
Shield 3	121.92 cm	Concrete	1.5
Shield 4	45.72 cm	Concrete	2.35
Air Gap		Air	0.00122

Source Input
Grouping Method : Actual Photon Energies

Nuclide	curies	becquerels	µCi/cm³	Bq/cm³
Ba-137m	2.3650e-003	8.7505e+007	8.9680e-004	3.3182e+001
Co 60	4.9000e+000	1.8130e+011	1.8581e+000	6.8746e+004
Cs-137	2.5000e-002	9.2500e+008	9.4799e-003	3.5076e+002
Ni 63	7.2000e+000	2.6640e+011	2.7302e+000	1.0102e+005

Buildup
The material reference is : Source

Integration Parameters

Radial	20
Circumferential	10
Y Direction (axial)	10

Results

Energy MeV	Activity photons/sec	Fluence Rate MeV/cm²/sec No Buildup	Fluence Rate MeV/cm²/sec With Buildup	Exposure Rate mR/hr No Buildup	Exposure Rate mR/hr With Buildup
.0318	1.812e+06	0.000e+00	1.580e-28	0.000e+00	1.316e-30
.0322	3.342e+06	0.000e+00	2.963e-28	0.000e+00	2.384e-30
.0364	1.216e+06	2.738e-304	1.299e-28	1.556e-306	7.378e-31
.6616	7.674e+07	2.158e-26	4.577e-23	4.262e-29	8.873e-26
.6938	2.957e+07	2.991e-26	2.323e-23	5.774e-29	4.486e-26
.1732	1.813e+11	1.095e-16	1.210e-14	1.957e-19	2.163e-17

Page : 2
DOS File: BORAX24.MS5
Run Date: September 13, 2000
Run Time: 3:14:55 PM
Duration: 00:00:00

Energy MeV	Activity photons/sec	Fluence Rate MeV/cm²/sec No Buildup	Fluence Rate MeV/cm²/sec With Buildup	Exposure Rate mR/hr No Buildup	Exposure Rate mR/hr With Buildup
TOTALS:	3.627e+11	2.159e-15	1.930e-13	3.752e-18	3.355e-16

Page : 3
DOS File: BORAX24.MS5
Run Date: September 13, 2000
Run Time: 3:14:55 PM
Duration: 00:00:00

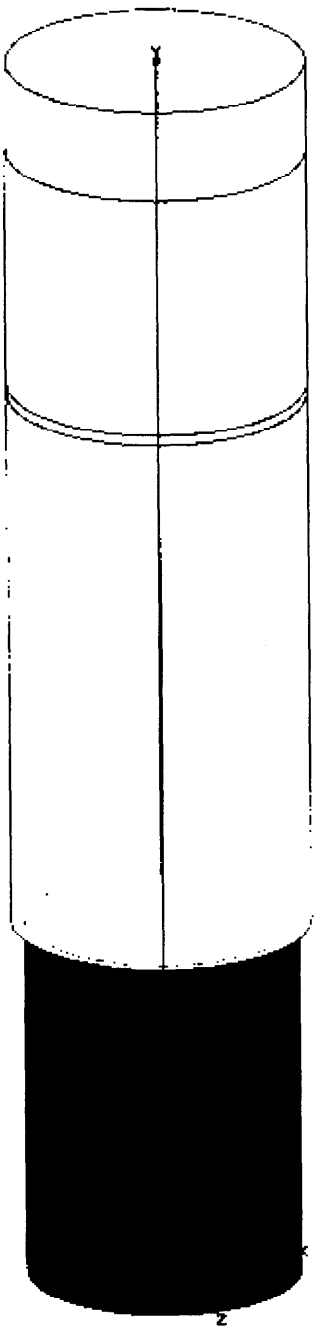

MicroShield v5.03b (5.03-00112)
Lockheed Martin Idaho Techologies

Page : 1
DOS File: BORAXS.MS5
Run Date: September 18, 2000
Run Time: 2:10:14 PM
Duration: 00:00:03

File Ref: _____
Date: _____
By: _____
Checked: _____

Case Title: Borax V
Description: Residential Scenario with 10 ft Basement
Geometry: 7 - Cylinder Volume - Side Shields

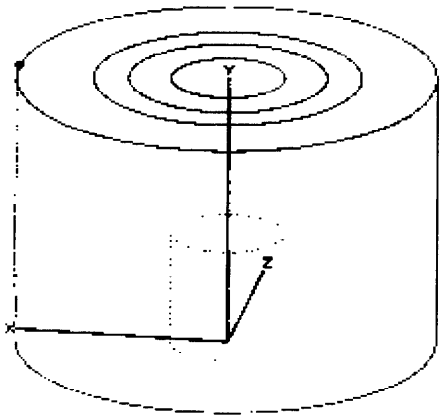

Source Dimensions

Height	182.88 cm	6 ft
Radius	91.44 cm	3 ft

Dose Points

	X	Y	Z
# 1	335.28 cm	445.008 cm	0 cm
	11 ft	14 ft 7.2 in	0.0 in

Shields

Shield Name	Dimension	Material	Density
Source	4.80e+06 cm³	Iron	7.86
Shield 1	67.056 cm	Concrete	1.5
Shield 2	54.864 cm	Concrete	2.35
Shield 3	121.92 cm	Concrete	1.5
Transition		Air	0.00122
Air Gap		Air	0.00122
Immersion		Concrete	1.5

Source Input
Grouping Method : Actual Photon Energies

Nuclide	curies	becquerels	µCi/cm³	Bq/cm³
Ba-137m	1.0595e-002	3.9202e+008	2.2056e-003	8.1606e+001
Co-60	4.1200e-005	1.5244e+006	8.5765e-006	3.1733e-001
Cs-137	1.1200e-002	4.1440e+008	2.3315e-003	8.6264e+001
Ni-63	7.0000e+001	2.5900e+012	1.4572e+001	5.3915e+005

Buildup
The material reference is : Shield 3

Integration Parameters

Radial	10
Circumferential	10
Y Direction (axial)	20

Results

Energy MeV	Activity photons/sec	Fluence Rate MeV/cm²/sec No Buildup	Fluence Rate MeV/cm²/sec With Buildup	Exposure Rate mR/hr No Buildup	Exposure Rate mR/hr With Buildup
0.0318	8.116e+06	4.954e-284	1.674e-27	4.127e-286	1.394e-29
0.0322	1.497e+07	1.730e-275	3.209e-27	1.392e-277	2.583e-29
0.0364	5.449e+06	4.831e-205	1.789e-27	2.745e-207	1.016e-29
0.6616	3.527e+08	2.647e-22	1.261e-19	5.132e-25	2.445e-22
0.6938	2.487e+02	5.548e-28	2.349e-25	1.071e-30	4.535e-28
1.1732	1.524e+06	2.787e-19	3.251e-17	4.981e-22	5.810e-20

Page : 2
DOS File: BORAX5.MS5
Run Date: September 18, 2000
Run Time: 2:10:14 PM
Duration: 00:00:03

Energy MeV	Activity photons/sec	Fluence Rate MeV/cm²/sec No Buildup	Fluence Rate MeV/cm²/sec With Buildup	Exposure Rate mR/hr No Buildup	Exposure Rate mR/hr With Buildup
1.3325	1.524e+06	3.426e-18	3.029e-16	5.944e-21	5.256e-19
TOTALS:	3.843e+08	3.705e-18	3.356e-16	6.442e-21	5.839e-19

Page : 3
DOS File: BORAX5.MS5
Run Date: September 18, 2000
Run Time: 2:10:14 PM
Duration: 00:00:03

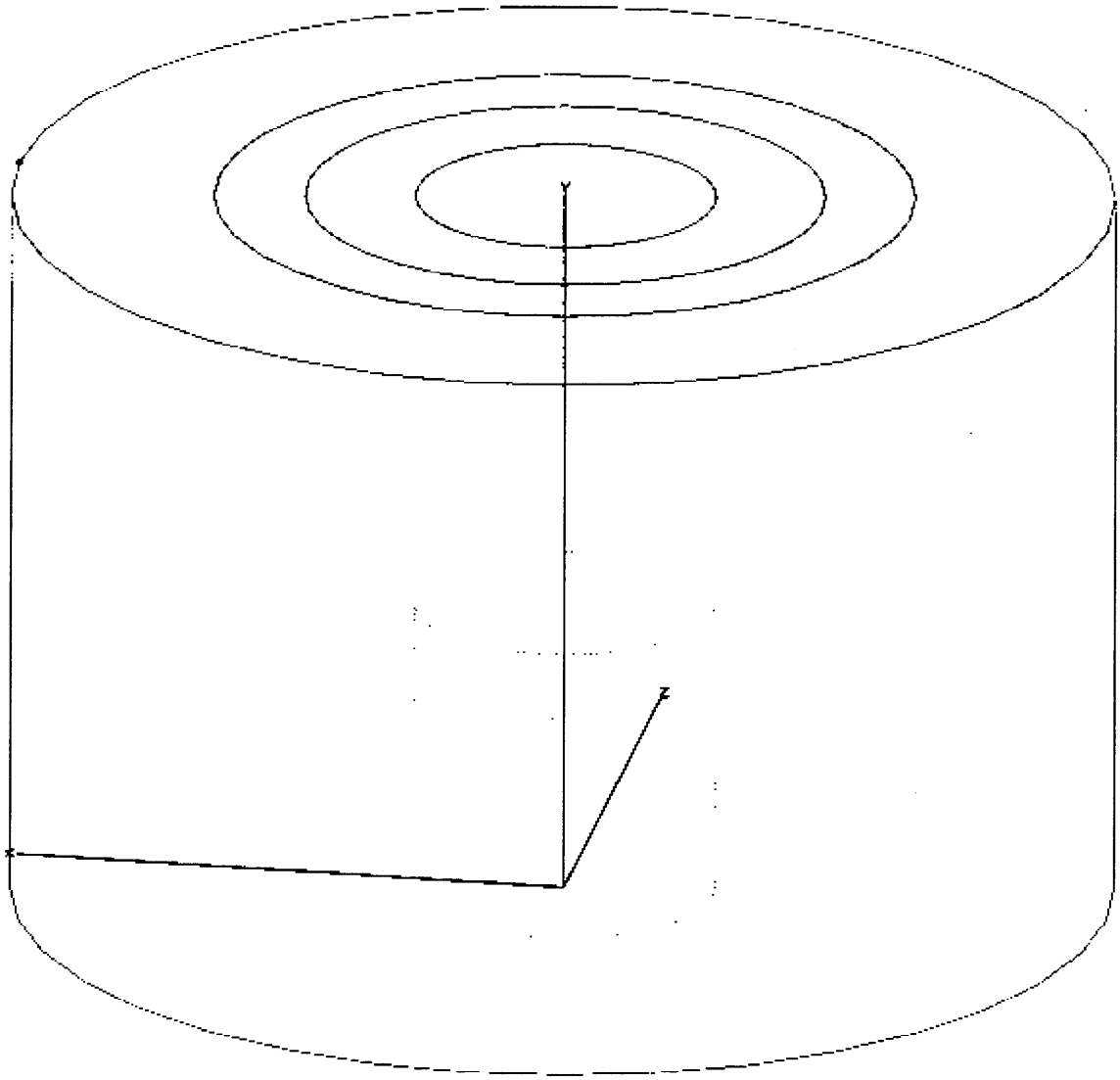

[illegible] 9/18/00 BORAX-07 ..... SOURCE TERMS

CONTAMINATED SOIL VOL:

BOX DIMENSIONS - $\underbrace{2' \times 4' \times 8'}_{64\,ft^3} \times 33$ BOXES $= 2112\,ft^3$

$\approx \underline{\underline{60\,m^3\ [59.81\,m^3]}}$

SOIL DENSITY - $\underline{\underline{1.6\,g/cm^3}}$

VOL OF BORAX RX II-III PIT - $\underline{\underline{V \approx 66.1\,m^3}}$

VOL OF RX II-III - $V = \pi(132.7\,cm)^2(518.16\,cm) = 28665291.3\,cm^3$ OR $\underline{\underline{28.67\,m^3}}$

RX II-III ~~DIMENSIONS~~ DIMENSIONS - 17 ~~1/2~~' LENGTH 4.42' DIAMETER (67.31 cm-r)

CONFIRM DIMENSIONS VOL MATCHES RX STATED VOL -

$V = \pi r^2 h$

$V = \pi(67.31\,cm)^2(182.88\,cm)$

$V = \cancel{828962.73\,cm^3 \approx 0.829\,m^3}\ 260306.59\,cm^3\ (2.6\,m^3)\ (91.92\,ft^3)$

VOL OF RX PIT - 2.9 m LONG, 3.4 m WIDE, 6.7 m DEEP $\Big\}$ $2.9\,m \times 3.4\,m \times 6.7\,m = \underline{\underline{66.1\,m^3}}$

TOTAL RAD INV FOR II-III PIT

^{137}Cs: $160\,\mu Ci/g \cdot \frac{1.5\,g}{cm^3} \cdot \frac{cm^3}{1\times10^{-6}\,m^3} \cdot 66.1\,m^3 = 1.59\times10^{-2}\,Ci$ OR $15.9\,mCi$

^{60}Co: $2.1\,\mu Ci/g \cdot \frac{1.5\,g}{cm^3} \cdot \frac{cm^3}{1\times10^{-6}\,m^3} \cdot 66.1\,m^3 = 2.1\times10^{-4}\,Ci$ OR $.21\,mCi$

^{152}Eu: $2.4\,\mu Ci/g \cdot \frac{1.5\,g}{cm^3} \cdot \frac{cm^3}{1\times10^{-6}\,m^3} \cdot 66.1\,m^3 = 2.4\times10^{-4}\,Ci$ OR $.24\,mCi$

AS OF CLOSURE

INFO SOURCE: FINAL REPORT D&D OF BORAX-V RX BLDG G.R. RAMMEL May '97 WEL-96/0325 Rev 0

THESE #'S WERE TAKEN ON THE LAST PAGE.

ACTIVITY @ 100 yrs

^{137}Cs: $A = (1.59\times10^{-2}\,Ci)\left(e^{-\left(\frac{\ln 2}{30.17\,yr}\right)(100\,yr)}\right) \Rightarrow \underline{\underline{1.59\times10^{-4}\,Ci}}$

^{60}Co: $A = (2.1\times10^{-4}\,Ci)\left(e^{-\left(\frac{\ln 2}{5.271\,yr}\right)(100\,yr)}\right) \Rightarrow \underline{\underline{4.1\times10^{-11}\,Ci}}$

^{152}Eu: $A = (2.4\times10^{-4}\,Ci)\left(e^{-\left(\frac{\ln 2}{13.48\,yr}\right)(100\,yr)}\right) \Rightarrow \underline{\underline{1.91\times10^{-6}\,Ci}}$

Source Term :

Activity Calc - $A = A_0 e^{-\lambda t}$

A = New Activity
A_0 = Original Activity
λ = .693 / $t_{1/2}$
t = time

^{60}Co	A_0 = 21.1 Ci	For the Borax Reactor Vessels [redacted]-V.
^{137}Cs	A_0 = .112 Ci	
^{137}Ba	A_0 = .106 Ci	
^{63}Ni	A_0 = 140 Ci	

Info Source: For Source Term Activities: EDF-ER-4 Borax-V Rx Bldg. D.E. Burns

t_0 = 1992 t_1 = 2000

Make sure $t_{1/2}$ units match! If $t_{1/2}$ in (min) then t should be in (min).

^{60}Co = 5.271 y
^{137}Cs = 30.17 y
^{137}Ba = 2.552 m
^{63}Ni = 100 y
} $t_{1/2}$

8 y = 4207590 min

^{137}Ba = 2.552 y } $t_{1/2}$

^{60}Co : $A = (21.1\ Ci)\, e^{-\left(\frac{.693}{5.271\,y}(8\,y)\right)}$

A = .327 Ci

^{137}Cs : $A = (.112\ Ci)\, e^{-\left(\frac{.693}{30.17}\cdot 8\right)}$ => .093 Ci

^{137}Ba : $A = (.106\ Ci)\, e^{-\left(\frac{.693}{2.552\,m}\,8\,y\right)}$ => 0 Ci

^{63}Ni : $A = (140\ Ci)\, e^{-\left(\frac{.693}{100\,y}\,8\,y\right)}$ => 132 Ci

^{60}Co	A_0 = 4.94 Ci	For the Borax Reactor Vessel II-IV.
^{137}Ba	A_0 = .024 Ci	
^{137}Cs	A_0 = .025 Ci	
^{63}Ni	A_0 = 7.2 Ci	

^{60}Co $A = (4.94\ Ci)\, e^{-\left(\frac{.693}{5.271\,y}\,8\,y\right)}$ => 1.73 Ci

^{137}Cs $A = (.025\ Ci)\, e^{-\left(\frac{.693}{30.17\,y}\,8\,y\right)}$ => .021 Ci

^{137}Ba $A = (.024\ Ci)\, e^{-\left(\frac{.693}{2.552\,m}\,8\,y\right)}$ => 0 Ci

^{63}Ni $A = (7.2\ Ci)\, e^{-\left(\frac{.693}{100\,y}\,8\,y\right)}$ => 6.81 Ci

Source Term Activity @ 100 yrs –

BORAX II RX

^{60}Co $A = (21.1\,Ci)\left(e^{-\left(\frac{.693}{5.271\,yr}\right)(100\,yr)}\right)$

$A = 4.12\times10^{-5}\,Ci$ or $41.2\,\mu Ci$

^{137}Cs $A = (.112\,Ci)\left(e^{-\left(\frac{.693}{30.17\,yr}\right)(100\,yr)}\right)$

$A = 1.12\times10^{-2}\,Ci$ or $11.3\,mCi$

^{137m}Ba $A = (.106\,Ci)\left(e^{-\left(\frac{.693}{4.65\times10^{-3}\,yr}\right)(100\,yr)}\right)$

$A = \phi\,Ci$

^{63}Ni $A = (140\,Ci)\left(e^{-\left(\frac{.693}{100\,yr}\right)(100\,yr)}\right)$

$A = 70\,Ci$

BORAX II-IV RX

^{60}Co $A = (4.94\,Ci)\left(e^{-\left(\frac{.693}{5.271\,yr}\right)(100\,yr)}\right)$

$A =$ ~~$4.9\times10^{-8}\,Ci$ or $49\,nCi$~~ $9.6\times10^{-6}\,Ci$ or $9.6\,\mu Ci$

^{137}Cs $A = (.025\,Ci)\left(e^{-\left(\frac{.693}{30.17\,yr}\right)(100\,yr)}\right)$

$A = 2.5\times10^{-2}\,Ci$ or $2.5\,mCi$

^{137}Ba $A = (.024\,Ci)\left(e^{-\left(\frac{.693}{4.80\times10^{-3}\,yr}\right)(100\,yr)}\right)$

$A = \phi$

^{63}Ni $A = (7.2\,Ci)\left(e^{-\left(\frac{.693}{100\,yr}\right)(100\,yr)}\right)$

$A = 3.6\,Ci$

Source Term Summary –

BORAX V	Co-60	$A = 4.12 \times 10^{-5}$ Ci	or 41.2 μCi
	Cs-137	$A = 1.12 \times 10^{-2}$ Ci	or 11.2 mCi
	Ba-137m	A = Ø Ci	
	Ni-63	A = 70 Ci	
BORAX II – IV	Co-60	$A = 9.6 \times 10^{-6}$ Ci	or 9.6 μCi
	Cs-137	$A = 2.5 \times 10^{-3}$ Ci	or 2.5 mCi
	Ba-137m	A = Ø Ci	
	Ni-63	A = 3.6 Ci	

@ 100 yrs From Now (1992) Array Date

Orig Source Term Info Ref. –

BORAX-V Facility D&D

EDF Seq #: EDF-ER-14

Author : R.E. Burns

Date : 5/12/94

BORAX II-IV RX Pit/Vessel

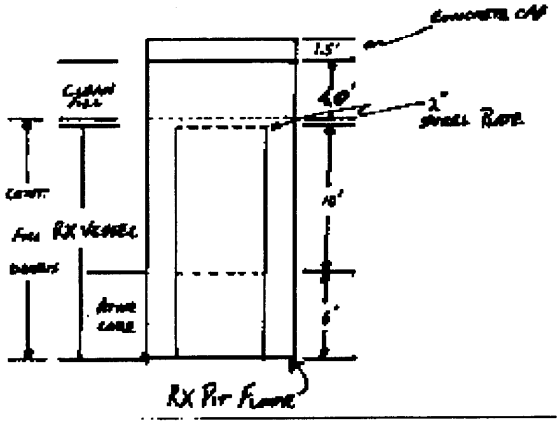

BORAX II-IV RX Vessel/Pit Rev 2

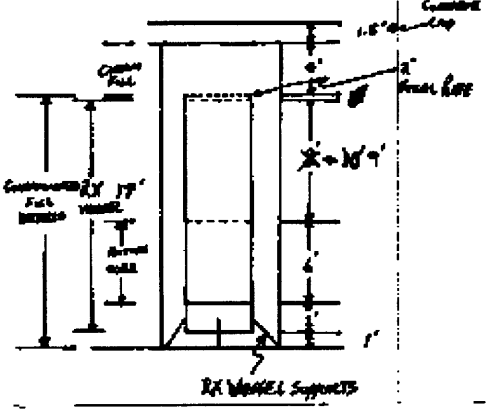

TOTAL RAD INVENTORY FOR BORAX II-IV PIT

^{137}Cs $160 \frac{pCi}{g} \cdot \frac{1.5g}{cm^3} \cdot \frac{cm^3}{1 \times 10^{-6} m^3} \cdot 60 m^3 = \underline{\underline{14.4 \text{ mCi or } 1.44 \times 10^{-3} \text{ Ci}}}$

^{60}Co $2.1 \frac{pCi}{g} \cdot \frac{1.5g}{cm^3} \cdot \frac{cm^3}{1 \times 10^{-6} m^3} \cdot 60 m^3 = \underline{\underline{.189 \text{ mCi or } 1.89 \times 10^{-4} \text{ Ci}}}$

^{152}Eu $2.4 \frac{pCi}{g} \cdot \frac{1.5g}{cm^3} \cdot \frac{cm^3}{1 \times 10^{-6} m^3} \cdot 60 m^3 = \underline{\underline{.216 \text{ mCi or } 2.16 \times 10^{-4} \text{ Ci}}}$

As of June 1996

INFO SOURCE: FINAL REPORT D&D OF BORAX-V
RX BLDG G.R. ROMANOS MAY 1997
INEL-96/0325 REV Ø

VOL OF CONTAMINATED MAT IN PIT —

FROM Fig 1 $\underbrace{2' \times 4' \times 8'}_{64 ft^3} \times 33$ BOXES $= 2112 ft^3 \approx 60 m^3 (59.81 m^3)$

PIT DIMENSIONS 9.5 ft (2.9m) LONG
11.15 ft (3.4 m) WIDE
X ft (X m) DEEP

$\cancel{2.9m \times 3.4m \times X = 66.1 m^3}$ $2.9m \cdot 3.4m \cdot Xm = 60 m^3$

$\cancel{9.86 Xm^2 = 66.1 m^3}$ $X = 6.08m$

$\cancel{Xm = 6.7m}$ (