THE CONTENTS OF THIS SECTION ARE
THE HIGHEST QUALITY AVAILABLE

INITIAL AP DATE 9/28/01

Appendix D

CPP-94 Accelerated Remedial Action Scope of Work

CPP-94 Accelerated Remedial Action Scope of Work

09/27/20[illegible]

STATEMENT OF WORK

CPP-94 Accelerated Remedial Action Implementation

Waste Area Group #3 - Group 6 – Buried Gas Cylinders

BACKGROUND

In 1991, an agreement was reached between the U.S. Department of Energy Idaho Operations Office (DOE-ID), the U.S. Environmental Protection Agency (EPA) Region 10, and the Idaho Department of Health and Welfare (IDHW) to ensure that the environmental impacts associated with the releases or threatened releases of hazardous substances at the Idaho National Engineering and Environmental Laboratory (INEEL) are thoroughly investigated and that appropriate response actions are taken. This agreement, called the Federal Facility Agreement and Consent Order (FFA/CO), defined 10 Waste Area Groups (WAG) and various operable unit (OUs) within each WAG. The Idaho Nuclear Technology and Engineering Center (INTEC) (formerly the Idaho Chemical Processing Plant) is identified in the FFA/CO as Waste Area Group (WAG) 3.

The WAG 3 OU 3-13 Final Record of Decision (ROD) (DOE/ID-10660) was signed by the regulatory agencies in September 1999. This ROD has documented selected response actions designed to reduce the potential threats to human health and/or the environment to acceptable levels. The remedial actions documented in the OU 3-13 ROD were chosen in accordance with the Comprehensive Environmental Response, Compensation, and Liability Act (CERCLA) of 1980. The selected remedial actions are also intended to satisfy the requirements of the FFA/CO. The decisions are based on the Administrative Record for WAG 3, OU 3-13.

Also in the ROD are seven groupings of WAG 3 release sites. Group 6 addresses Buried Gas Cylinders. The Buried Gas Cylinders pose a safety hazard to inadvertent intruders (i.e., backhoe operators or drillers). The cylinders are presumed to be pressurized and could burst during excavation. In addition, hydrofluoric acid (HF), which may be present in the cylinders, is very corrosive, reacts violently with moisture, and can generate explosive concentrations of hydrogen gas. The selected remedy/response action for Group 6 Buried Gas Cylinders is Removal, Treatment, and Disposal. This alternative includes:

- Remove the gas cylinders using a Subcontractor specializing in gas cylinder removal
- Treat the cylinder contents, if necessary
- Recycle or dispose of the empty gas cylinder containers in an approved TSD

SCOPE OF WORK

Introduction

Bechtel BWXT Idaho, LLC (BBWI), the Management and Operating Contractor for the Department of Energy (DOE) at the INEEL requires a Subcontractor for planning and implementing a remedial action at two CERCLA regulated compressed gas cylinder waste sites. The sites are located within INEEL boundary. The INEEL is located in the Southeastern Idaho approximately 50 miles west of Idaho Falls, Idaho. The waste site is believed to contain four HF cylinders approximately 12 inches in diameter by 48 inches in length. This site is referred to as CPP-94. The CERCLA waste site is part of the Waste Area Group 3, OU 3-13, Group 6. The Group 6 site is considered remote. CPP-94 is approximately 1.5 miles northeast of the INTEC with no paved access or utilities (see Figures 1 and 2).

Accelerated Removal at CPP 94

Limiting Conditions:

A. The contractor shall only remediate/treat cylinders with working valves or valves that can be refurbished to work safely.
B. Any treatment processes shall be subject to approval by the regulatory agencies. BBWI shall be responsible for obtaining written agency approval of the treatment process.

The Subcontractor shall provide labor, material, equipment, and supplies to perform an accelerated excavation, physical evaluation and retrieval of four potential HF cylinders at CPP-94. One cylinder at CPP-94 is on the soil surface and the other three are partially exposed. The Subcontractor shall also be responsible for placing the cylinders in a safe storage condition at the WAG 3 CERCLA Storage Area within the INTEC facility. The subcontractor shall excavate and retrieve any additional cylinders or related hazardous debris that may be encountered during excavation. Prior to any movement or transport of the cylinders the physical evaluation shall be completed by the Subcontractor. The evaluation results must determine that the container integrity allows for safe handling.

BBWI will provide a high resolution geophysical map with the cylinder locations and land survey coordinates. The Rapid Geophysical Surveyor used at 94 is a proprietary magnetic system, and provides data on a 6 inch by 20 inch grid.

The CPP-94 activities shall be conducted in accordance with the INEEL Standard 101 Work Controls, DOE/ID10587 Quality Assurance, and INEEL/EXT-97-00032 Project Implementation, requirements. The Subcontractor must have written procedures in place documenting safe handling and retrieval practices storage requirements and transportation of compressed gas cylinders. The Subcontractor shall provide detailed input on the excavation and evaluation criteria. BBWI will input the information into the work package. Subcontractors written procedures on excavation, handling, packaging, and transportation shall be provided. The subcontractor shall also review the attached Health and Safety Plan and shall provide input to the plan so as to apply to this project and submit to BBWI for approval.

The Subcontractor shall mobilize to CPP-94. The Subcontractor shall unearth the cylinders. The Subcontractor shall then perform a visual examination of the cylinders and document all applicable characteristics, (valve configuration, container construction, integrity, labeling, corrosion effects etc). The results of the examination will be used by BBWI to determine the storage option. The Subcontractor shall be responsible for placing cylinders into a safe storage condition. One of three options are possible for safe storage condition (1) a depressurized state with the four potential HF cylinder valves removed and the inside of the cylinder open to atmosphere with the gases recaptured (2) placement of the cylinders in an overpack container capable of safely controlling pressurized HF gas cylinders and transport to CERCLA waste storage area CPP-92. (3) Over pack the cylinders and ship to a BBWI approved Treatment Storage and Disposal Facility. The Subcontractor shall provide a cost estimate for each option. The subcontractor shall also be responsible for disposal of any recaptured HF or other gases.

Note: If container degradation prohibit handling and placement in an over pack option (1) shall be implemented.

If an over-pack is used the subcontractor shall be responsible for transporting the cylinders to an INEEL CERCLA Waste Storage Area at INTEC. BBWI will prepare a waste profile for storage. The cost for purchase or rental of over-pack containers is required in the Subcontractor proposal.

If the cylinders are depressurized the Subcontractor will be responsible for transporting the cylinders to an INEEL CERCLA Waste Storage Area at INTEC. BBWI will prepare a waste profile for storage. The Subcontractor will also be responsible for disposal of any recaptured HF gas.

Note: Results from the Portable Isotopic Neutron Spectroscopy testing at CPP-94 indicate a strong fluorine peak and the probability of HF gas is high.

Accelerated Removal Schedule:
Included in attachment 5

(Note: The schedule of the OU 3-13 Group 6, activities must be compliant with the *Remedial Design / Remedial Action Scope of Work for Waste Area Group 3, Operable Unit 3-13*, [DOE/ID-10721, Revision 1, February 2000])

Deliverables

Accelerated Removal at CPP-94
Excavate four compressed gas (HF) cylinders from Operable Unit 3-13, Group 6, waste site CPP-94. Excavation shall be minimal to allow for physical evaluation. Includes task completion and signoff by BBWI.

Perform a visual examination of the cylinders and produce and issue an examination report to BBWI. As a minimum, the report will detail cylinder information, color, wall thickness, valve configuration, pressure rating.

Place the cylinders into a safe storage condition per Option 1, 2, or 3 described above. If option 1 is used, this deliverable includes disposal of any residual or recaptured HF gasses. If option 2 is used, this deliverable includes transport of the cylinders to the waste storage area. If option 3 is used a BBWI approved TSD facility must be identified.

REGULATORY AND TECHNICAL REQUIREMENTS

1. DOE Explosive Safety Manual, Rev. 8, DOE M 440.1-1, March 29, 1996
2. 29 CFR 1910.120, Hazardous Waste Operations and Emergency Response
3. 40 CFR 300, National Oil and Hazardous Substances Pollution Contingency Plan
4. Guidance on Expediting Remedial Design and Remedial Action, EPA 540/G-90-006, August 1990
5. Checklist of Subcontractor Requirements for On-Site Work, INEEL Form 540.10
6. EPA Quality Assurance / Quality Control Guidance for Removal Activities: Sampling QA and QC Plan and Data Validation Procedures, EPA 540/G-90-004, April 1990
7. 40 CFR 263, Standard Applicable to Transporters of Hazardous Waste
8. 40 CFR 263.20, The Manifest System
9. 29 CFR 1926, Safety and Health Regulations for Construction
10. Per the Office of Nuclear Safety, Issue No. 96-03, June 1996 "This Notice applies to DOE facilities that use, store, or transport cylinders containing compressed gases."
11. Department of Transportation — Interstate transportation of compressed gas cylinders is regulated by 49 CFR 100 to 179. These regulations refer to Compressed Gas Association CGA P-1-1991 for transportation of compressed gas cylinders
12. Occupational Safety and Health Administration — Employee safety is governed by the Department of Labor. Marking, storage, labeling, and handling are governed by OSHA regulations as stated in 29 CFR 1910. The requirements of 29 CFR 1910.101, state that in-plant handling, storage, and use of compressed gases in cylinders shall comply with Compressed Gas Association CGA P-1-1991.
13. Handbook of Compressed Gases, Third Edition, Compressed Gas Association, Arlington, VA, Van Nostrand Reinhold, NY 1990
14. Guide to Safe Handling of Compressed Gases, Third Printing, Matheson Products, Inc., 1983
15. American Society for Testing and Materials (ASTM), D-323
16. 17DOE 5480.23, Nuclear Safety Analysis Reports
17. Code of Federal Regulations 49 CFR 100-179, Transportation
18. Code of Federal Regulations 29 CFR 1910, General Industry
19. Code of Federal Regulations 29 CFR 1910.101, Compressed Gas Association, CGA P-1 - 1991 Safe Handling of Compressed Gases in Containers
20. Code of Federal Regulations 49 CFR 173.304, Qualification, Maintenance and Use of Cylinders

SPECIAL CONSIDERATIONS

Health and Safety
The Subcontractor shall follow the requirements set forth by Form 540.10 (Subcontractor Requirements Checklist)

The Subcontractor shall meet the BBWI environmental health and safety requirements and use by the INEEL/EXT-2000-00270 HASP as a guide (see Attachment 3). Prior to the start of field operations for any portion of this Statement of Work, the Subcontractor shall review and work to existing health and safety documents pertaining to this site

The Subcontractor shall follow the requirements set forth by INEEL Standard 101 Work Controls and the associated work package as directed by BBWI

Training and Access Requirements (see Attachment 4)
Attachment 4 lists training and access requirements that the Subcontractor must follow

Schedule
Attachment 5 shows the schedule for this project.

Applicable Documents
OU 3-13 Record of Decision, DOE/ID-10660, Revision 0, October 1999
OU 3-13 Statement of Work, DOE/ID-10721, Revision 1, February 2000

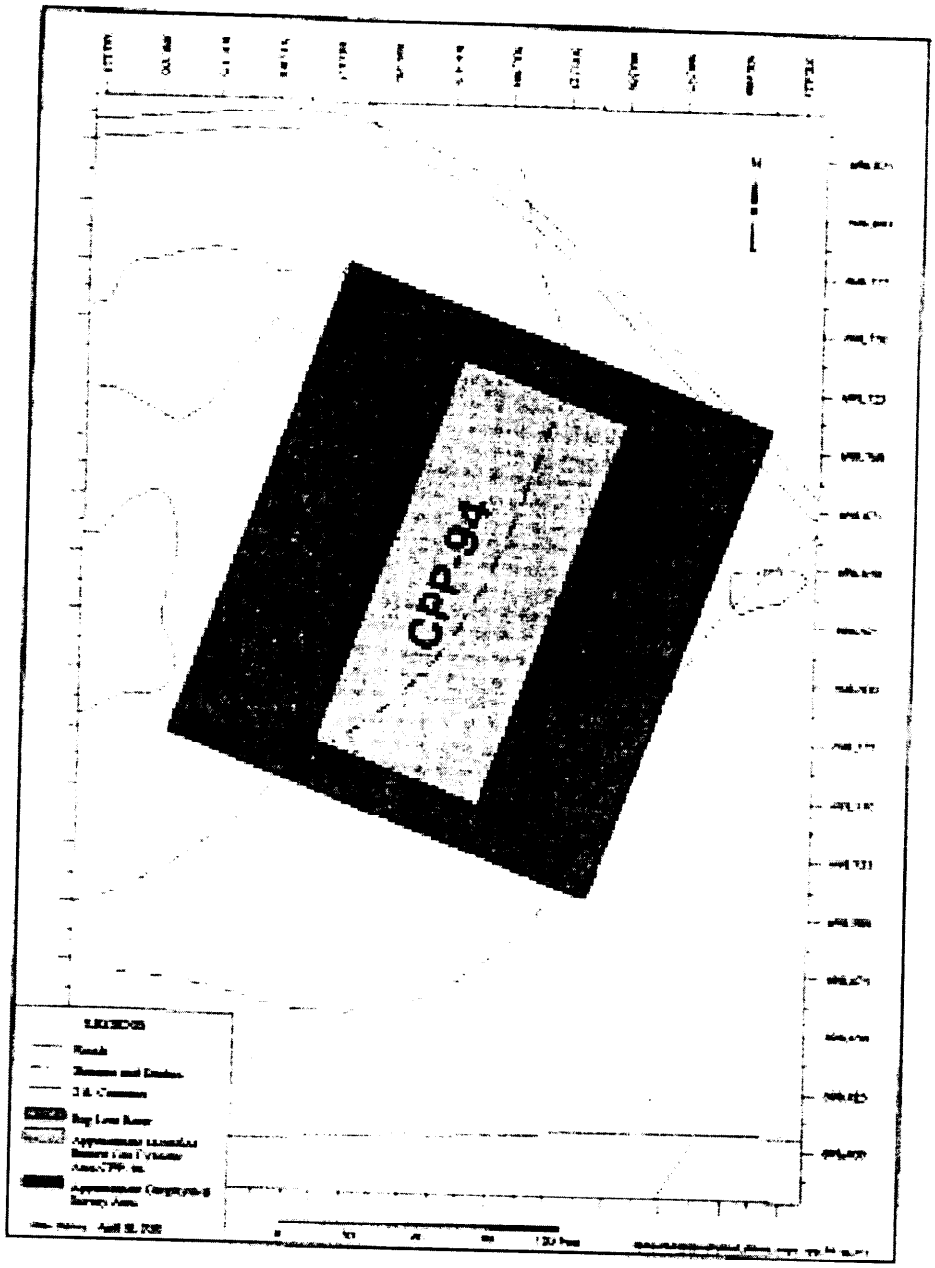

Figure 2. Location of Waste Area CPP-94

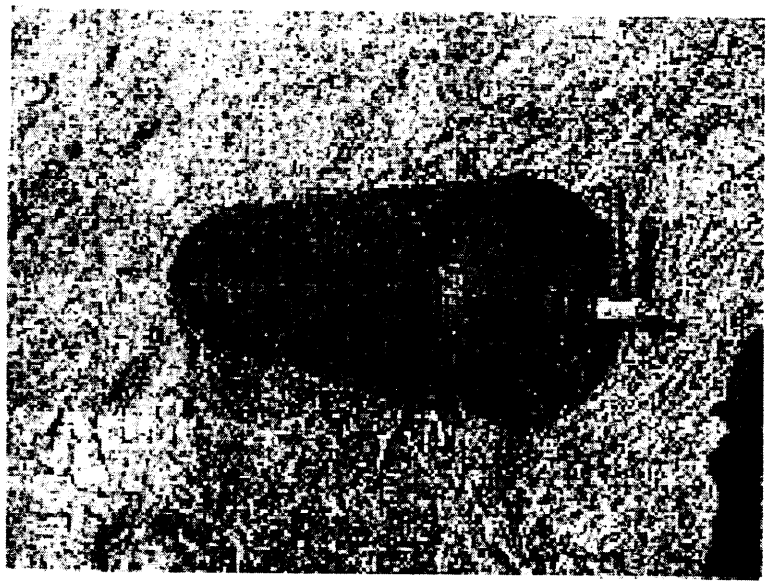

Figure 3. Compressed gas cylinders to be remediated

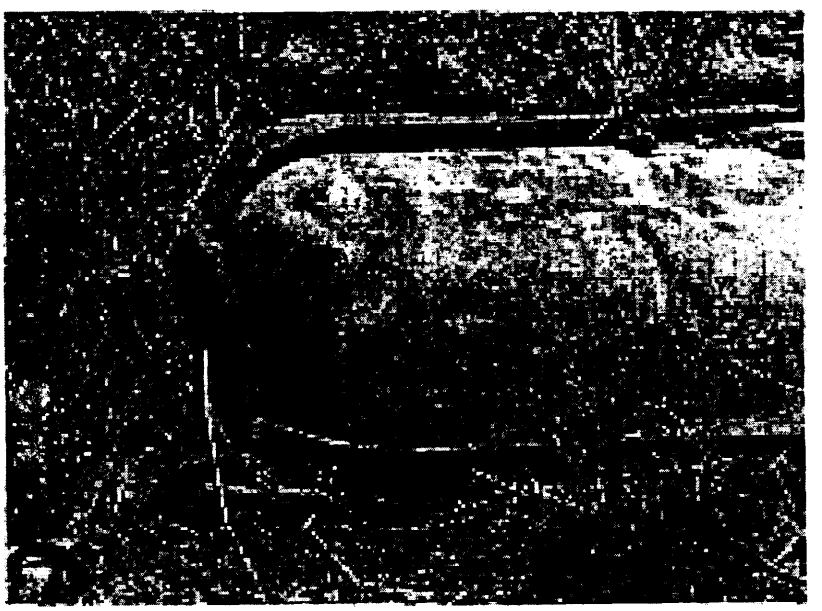

Figure 3. (Continued)

Attachment 1

Applicable or Relevant and Appropriate Requirements (ARARs)

Compliance with ARARs for Group 6—Buried Gas Cylinders Selected Remedy

Alternative/ARARs citation	Description	Applicable, or Relevant and Appropriate (ARAR) or TBC	Comments
Action-specific			
IDAPA 16.01.01.650, 16.01.01.651	Idaho fugitive dust emissions	Applicable	Will be met during excavation and disposal using dust suppression
IDAPA 16.01.01.585, 16.01.01.586	Rules for control of air pollution in Idaho	Applicable	Will be met during treatment of tank contents
40 CFR 122.26	Storm water discharges during construction	Applicable	Will be met through engineering controls during excavation and construction
IDAPA 16.01.05.008 (40 CFR 264.114)	Disposal or decontamination of equipment, structures, and soils	Applicable	Applies to equipment used to treat or handle hazardous materials in the cylinders
40 CFR 300.440	Procedures for Planning and Implementing Off-Site Response Actions	Applicable	Applies only to off-site disposal of the cylinder contents
IDAPA 16.01.05.005 (40 CFR 262.20 through 34)	Hazardous waste characteristics identification	Applicable	Applies for hazardous waste contaminated soils that are excavated and managed on site
IDAPA 16.01.05.005 (40 CFR 261.7(a)(1), (b)(2))	Removal of hazardous waste in empty containers	Applicable	Applicable to empty containers and compressed gas cylinders
IDAPA 16.01.05.008 (40 CFR 264.170 through 179)	Use and Management of Containers	Applicable	Substantive requirements will be met for treatment, storage, disposal and transportation of RCRA hazardous cylinder contents or hazardous waste contaminated soils
IDAPA 16.01.05.011 (40 CFR 268)	Land disposal restrictions	Applicable	Applies only to the treatment and disposal of hazardous waste contaminated soils
IDAPA 16.01.05.011 (40 CFR 268.48)	Alternative LDR treatment standards for contaminated soil	Applicable	Applies only to the treatment and disposal of hazardous waste contaminated soils
IDAPA 16.01.05.008 (40 CFR 264.553)	Temporary units	Applicable	Applies to the storage and treatment of hazardous remediation media
IDAPA 16.01.05.008 (40 CFR 264.554)	Remediation waste staging piles	Applicable	Applies to the staging of hazardous remediation substrates

Alternative(ARARs) citation	Description	Applicable, or Relevant and Appropriate (ARAR) or TBC	Comments
IDAPA 16.08.15.008 (40 CFR 264 Subpart X)	Miscellaneous units	Applicable	Applies to hazardous wastes that are stored, treated or disposed.
IDAPA 16.01.05.008 (40 CFR 264 Subpart J)	Tank systems	Applicable	Applies to hazardous wastes that are stored, treated or disposed.
IDAPA 16.01.05.008 (40 CFR 264 Subpart BB)	Air emission standards for equipment leaks	Applicable	Applies to hazardous wastes that are stored, treated or disposed.
IDAPA 16.01.05.008 (40 CFR 264 1084 through 1089)	Air emission standards for tanks, surface impoundments, and containers	Applicable	Applies to hazardous wastes that are stored, treated or disposed.
IDAPA 16.01.05.008 (40 CFR 264.314)	Landfills	Applicable	Applies only if cylinders are capped in place
Chemical-specific			
IDAPA 16.01.05.005 (40 CFR 261)	Identification of Hazardous Waste	Applicable	Applies if soils containing hazardous waste are encountered
Location-specific			
None identified			
TBCs			
None identified			

Attachment 3

Health and Safety Plan

Note: Awardee will be provided with an electronic copy of this plan.

Attachment 4

Personnel Training

All project personnel shall receive training as specified in OSHA 29 CFR 1910.120/1926.65 and the BBWI *Safety and Health Manuals*. Radiation workers shall be trained according to the BBWI *Radiation Protection Manual*, MCP-126, "Training." Table 4-1 summarizes training requirements for project personnel. Specific training requirements for each worker may vary depending on the hazards associated with their individual job assignment and required access into radiological controlled areas.

Proof that all required training courses have been completed (including applicable refresher training) must be maintained on the project at all times. Examples of acceptable written training documents include: BBWI, "40 Hour OSHA HAZWOPER Card," BBWI, "Respirator Authorization Card," "DOE Certificate of Core Radiological Training II Card," "Medic/First Aid Training Card," and/or a copy of an individual's or department's (BBWI) TRAIN System printout demonstrating completion of training. A copy of the certificate issued by the institution where the training was received is also acceptable proof of training. The DOE radiological worker training must be documented on an official authorized card and have the designated INEEL site-specific training stamped or written on the card (unless issued prior to March 1997).

Before beginning work at the project, project-specific training will be conducted by the FTL and/or HSO. This training will consist of a complete review of this HASP and attachments, with time for discussion and questions. At the time of this training, personnel training records will be checked and verified to be current and complete for all required training shown in Table 4-1. Upon completing project-specific training, personnel will sign a training acknowledgement roster (Form 361.02) indicating that they have received this training, understand the tasks and associated hazards that will be conducted, and agree to follow all HASP and other safety requirements.

If not previously completed, each 40-hour trained HAZWOPER worker's complete the HAZWOPER initial 24-hour supervised field experience training. The worker will be monitored by the FTL and/or HSO for 3 days of site activities for satisfactory work performance. For 24-hour trained HAZWOPER workers, the same procedure will be followed, except the supervised field experience will only last 1 day.

The FTL, HSO, RCT, and ISS, as applicable, will conduct a daily prejob safety briefing of the task(s) to be performed that day. During this briefing, tasks are to be outlined, hazards identified, hazard controls and work zones established, PPE requirements discussed, and employees' questions answered. At the completion of this briefing work control documents will be read and signed (SWP[s], RWP[s], etc.). Particular emphasis will be placed on lessons learned from the previous day's activities and how tasks can be completed in the safest, most efficient manner. All personnel will be asked to contribute ideas to enhance worker safety and mitigate potential exposures at the project.

Table 1. Required training for project personnel

Task/Position (Topic)	FTL, CC, ISS, or HSO (Required)	Field Team (Required)	Nonworkers[a] (Required)	Visitors[b] (Required)
Project-specific training[c]	X	X	X	X
Decontamination (HASP Section 10)[d]	X	X	X	X
Hazard communication[d]	X	X	X	X
Fire extinguisher training[d]	X	X	X	X
Project control and warning devices[d]	X	X	X	X
HASP Emergency Response plan (Section 11)[d]	X	X	X	X
40-hour HAZWOPER[e]	X	X		X[g]
24-hour HAZWOPER occasional worker[f]	—	—	X	X[g]
8-hour HAZWOPER site supervisor	X	—	—	—
Hearing conservation[d]	X	X	X	X
Asbestos awareness[d]	X	X	X	X[d]
DOE Radiological Worker II/Radiological Worker I[d]	X	X	X	—
CPR and medic first aid[h]	X	—	—	—
Respirator qualification and fit test[i]	X	X	—	—
HAZMAT employee general awareness training[j]	X	X	—	—

a. Nonworkers (occasional project workers) who must enter the EZ are required to have the training necessary to perform their assigned tasks within the EZ. This may include the same training as FTL (depending on the task location) and directions by the HSO, ISS & SCT.

b. Visitors are required to meet the contractor training requirements, as a minimum, if they enter the EZ.

c. Training will be documented using Form 301/32.

d. Will be included in project-specific training.

e. Includes 40 hours of classroom instruction and 24 hours of supervised field experience.

f. Includes 24 hours of classroom instruction and 8 hours of supervised field experience.

g. As required based on project duties and site hazard access requirements.

h. Two Medic First/CPR qualified individuals must be present during site activities.

i. If entering areas requiring respirator use.

j. If identified as "HAZMAT" employee (i.e., anyone who directly affects hazardous material transportation safety by handling, packaging, labeling, loading, unloading, moving, driving, etc. [per 49 CFR 171.8]).

Attachment 5

Project Schedule By Phase

Date	Activity
	Phase I
Within one week of award	Kickoff meeting (includes a site walkdown)
10-4-2000	Submit plans/procedures for BBWI approval
10-9-2000	Contractor mobilization
10-10-2000	Work control package walkdown
10-20-2000	Complete accelerated removal and safe storage of HF cylinders from CPP-94

INEEL Accelerating the Remediation of a

Buried Compressed Gas Cylinder Site

An accelerated remedial action at one Comprehensive Environmental Response, Compensation, and Liability Act (CERCLA) site at the Idaho National Engineering and Environmental Laboratory (INEEL) is being implemented. The site, known as CPP-94, is part of the Waste Area Group 3, Operable Unit 3-13, Group 6 and is located about 1 mile northeast of Idaho Nuclear Technology Engineering Center (INTEC).

CPP-94 is in an off-road area and is presumed to contain four compressed gas cylinders that were abandoned sometime in the early 1950s. The main area of the site (about 10 x 20 ft) contains one fully exposed and two partially exposed gas cylinders. The fourth cylinder is located about 40ft northeast of the main area. Based on cylinder markings and preliminary characterization results, the cylinders are believed to contain hydrofluoric acid (referred to as HF). HF is a highly corrosive chemical that can pose a significant threat to humans upon contact or inhalation. Fluoride, a residual chemical of HF reactions, is a potential health and ecological hazard. In addition to the chemical hazard posed by HF, pressurized gas cylinders are considered an acute safety hazard if ruptured.

The decision to accelerate the CPP-94 remedial action and safely dispose of the cylinders and their contents is based upon several factors. Initially, the threat posed by summer range fires at the INEEL was the primary driver. The concern was evaluated by DOE and BBWI upper management in response to a DOE-HQ request for an evaluation of the INEEL for range fire vulnerability. A range fire at CPP-94 would not only increase the potential for cylinder rupture and the chemical release of HF into the environment, but it may also threaten fire fighting crews and equipment operators in the area. Although, the CPP-94 area has postings indicating the threat posed by the cylinders, the remoteness and unconfined assembly of the cylinders can still pose a threat to vehicles or field workers not familiar with the hazard while working under emergency conditions. The original remediation schedule did not complete the remediation until August 2001. The August start date for field activities would leave the cylinders vulnerable for another fire season. An additional benefit of the accelerated remedial action is that the timing of the field activities during colder months will complement the methodology used for implementation. As air temperature decreases, gas pressure inside the cylinder will also decrease and reduce the risks posed by over-pressurization, (i.e. P1 x T1 = P2 x T2). If the remedial action is performed when air temperatures are +67°F, costly steps of cylinder cooling are avoided and potential thermal embrittlement of the steel container is also avoided.

Efforts already undertaken at CPP-94 (site assessment and characterization, removal of nearby vegetation to reduce fuel for wildfires, placement of signs and barriers to prevent entry) are only temporary in nature. The accelerated remediation of the cylinders will eliminate the human health and environmental threat posed by the cylinders in a timely and cost saving manner.

•

⇒ **Emergency Condition # 1. Cylinder shows signs of Bulging.**

- Once the Visual inspection is completed, the next step is to start the Ultrasonic procedure, refer to Appendix C
- Install the cylinder lift device, once completed, one end of the rope will be attached to the lifting device and the other end of the rope will be attached to the forklift.
- Radio confirmation with the INEEL support group that the cylinder lift procedure willcommence.
- Lift the cylinder to a 45 degree angle, stop, from behind Lexan shields, do air monitoring with Hydrogen Fluoride color metric tubes, check LEL/O2 readings, look for signs of chemical release. All ok, continue to lift the cylinder to an upright position, after the cylinder is in an upright position, do air monitoring with Hydrogen Fluoride color metric tubes, check LEL/O2 readings, look for signs of chemical release

⇒ **Emergency Condition # 2, Cylinder Contents release during Excavation.**

- Complete Visual inspection on the cylinder, refer to Appendix B
- Once the Visual inspection is completed, the next step is to start the Ultrasonic procedure, refer to Appendix C
- Install the cylinder lift device, once completed, one end of the rope will be attached to the lifting device and the other end of the rope will be attached to the forklift
- Radio confirmation with the INEEL support group that the cylinder lift procedure will commence.
- Lift the cylinder to a 45 degree angle, stop, from behind Lexan shields, do air monitoring with Hydrogen Fluoride color metric tubes, check LEL/O2 readings, (or Direct reading instrument by INEEL), look for signs of chemical release. All ok, continue to lift the cylinder to an upright position, after the cylinder is in an upright position, do air monitoring with Hydrogen Fluoride color metric tubes, check LEL/O2 readings, look for signs of chemical release

⇒ **Emergency condition # 3, Release during the lifting of the cylinder.**

- Follow the Visual inspection procedure, if the cylinder fails, follow the flow diagram
- If the cylinder passes, go to the next step on the flow diagram, Manifold Procedure

1

- Set up the valve to accept the manifold fitting, watch for any signs of leaks or gas release, continue the air monitoring. Notify the support personnel.

  ⇒ **Emergency condition #4, Manifold attachment procedure.**
)

- Attach the manifold following the manifold procedure, see Appendix E.
- Watch for any signs of leaks or gas release, continue the air monitoring. Notify the support personnel.
- The next step is to pressure check the cylinder following the manifold procedure. Following the flow chart, determine pass or fail and continue to next step

  ⇒ **Emergency Condition # 5, Release during Pressure check.**
)

- The next step is to pull a sample from the cylinder into the sample cylinder, follow the manifold procedure

  ⇒ **Emergency Condition # 6, Release during Sampling.**

- If it is determined that the cylinder valve is inoperable, refer to the valve removal procedure, Appendix F
- Notify support personnel of valve removal procedure.
- Prepare cylinder for valve removal procedure
- Start valve removal process.

  ⇒ **Emergency Condition # 7, Release during Valve Procedure.**

- When valve replacement is completed, re-attach the manifold and pull a sample from the cylinder

BURIED CYLINDER FLOW DIAGRAM

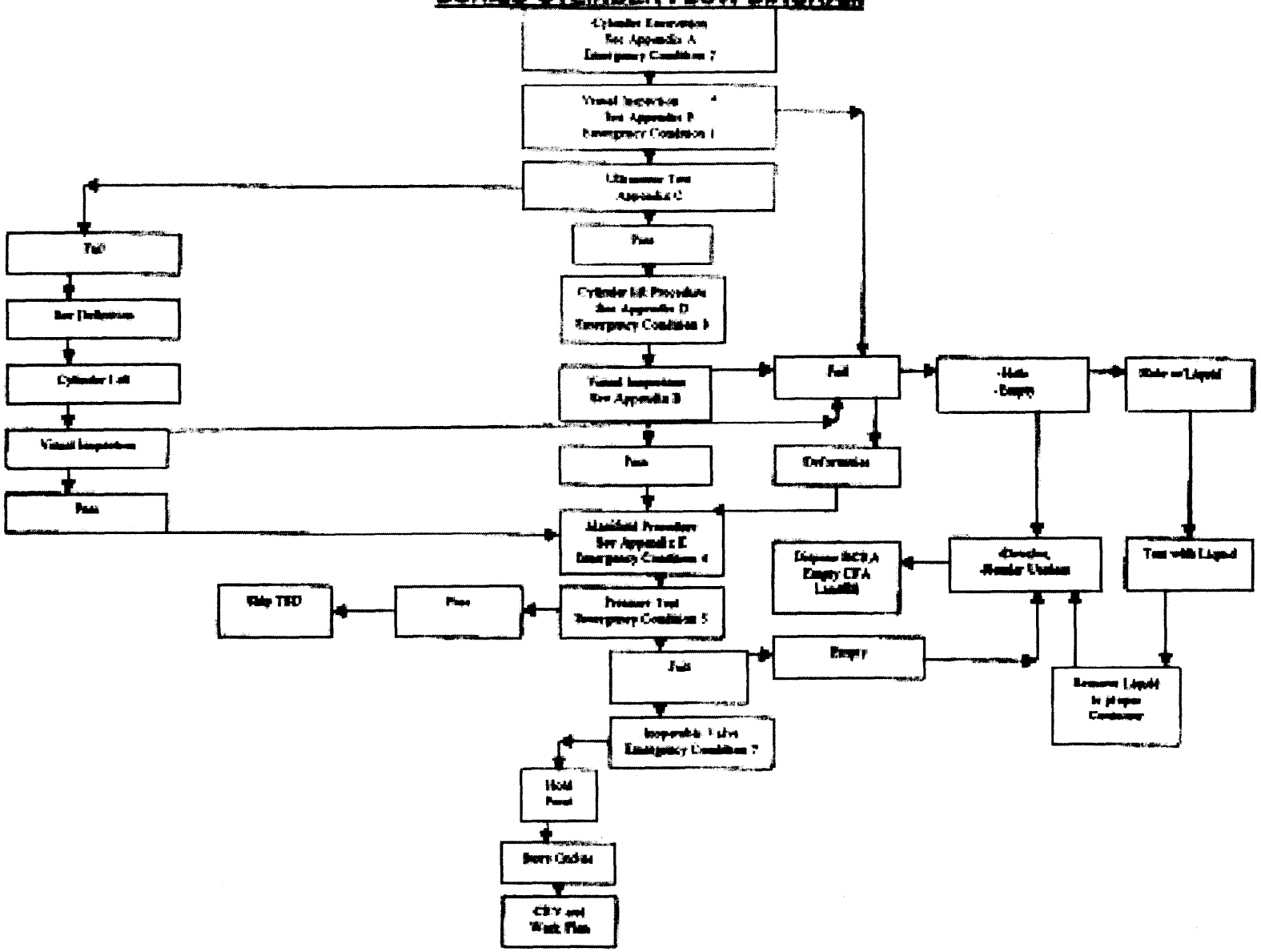

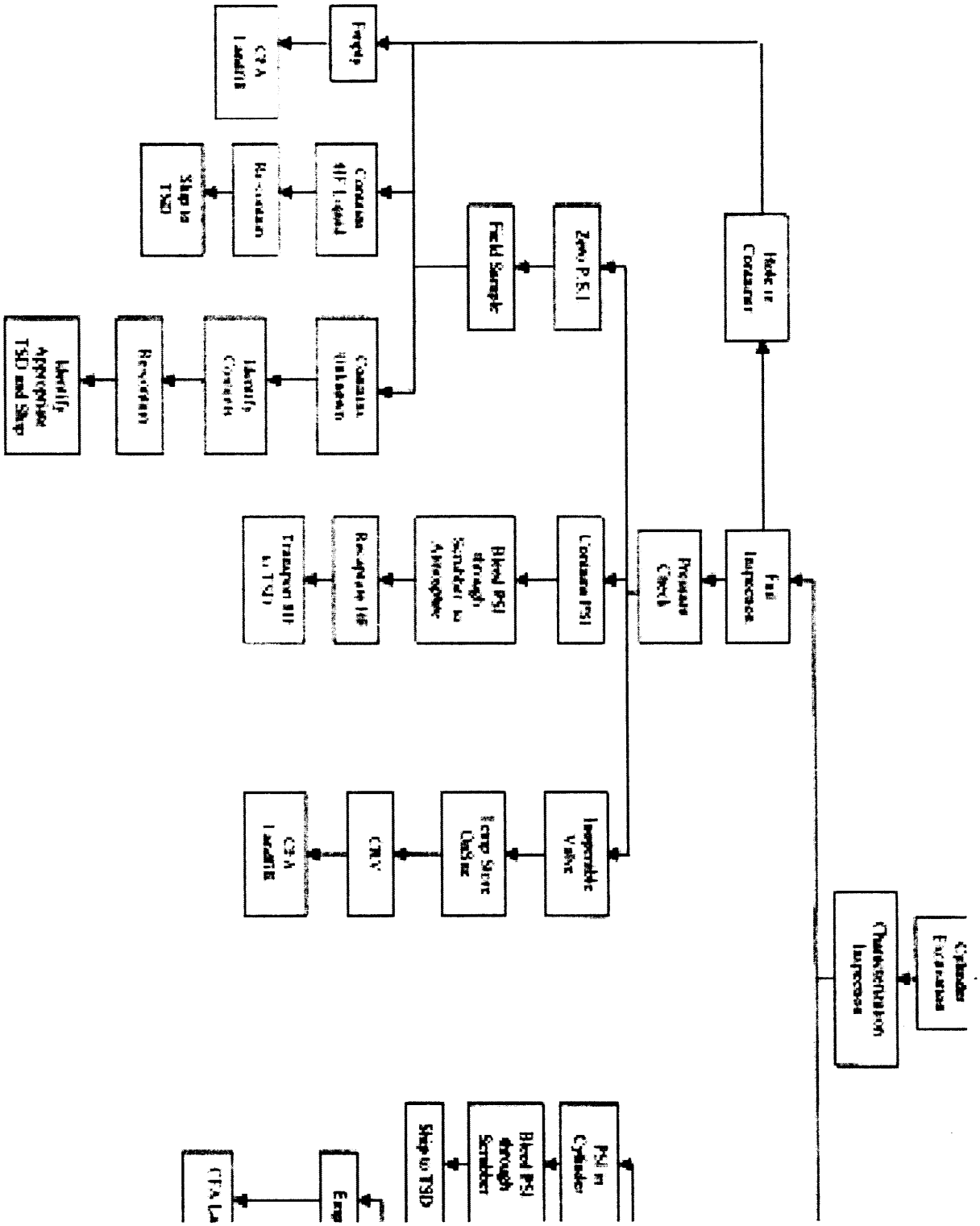
Hole in Container
Zero PSI
Field Sample
Fail Inspection
Pressure Check
Contains PSI
Bleed PSI through Scrubber to Atmosphere
Inspectable Valve
Temp Store Outside
CRV
Cylinder Excavation
Characterization Inspection
PSI in Cylinder
Bleed PSI through Scrubber
Ship to TSD
Identify Appropriate TSD and Ship
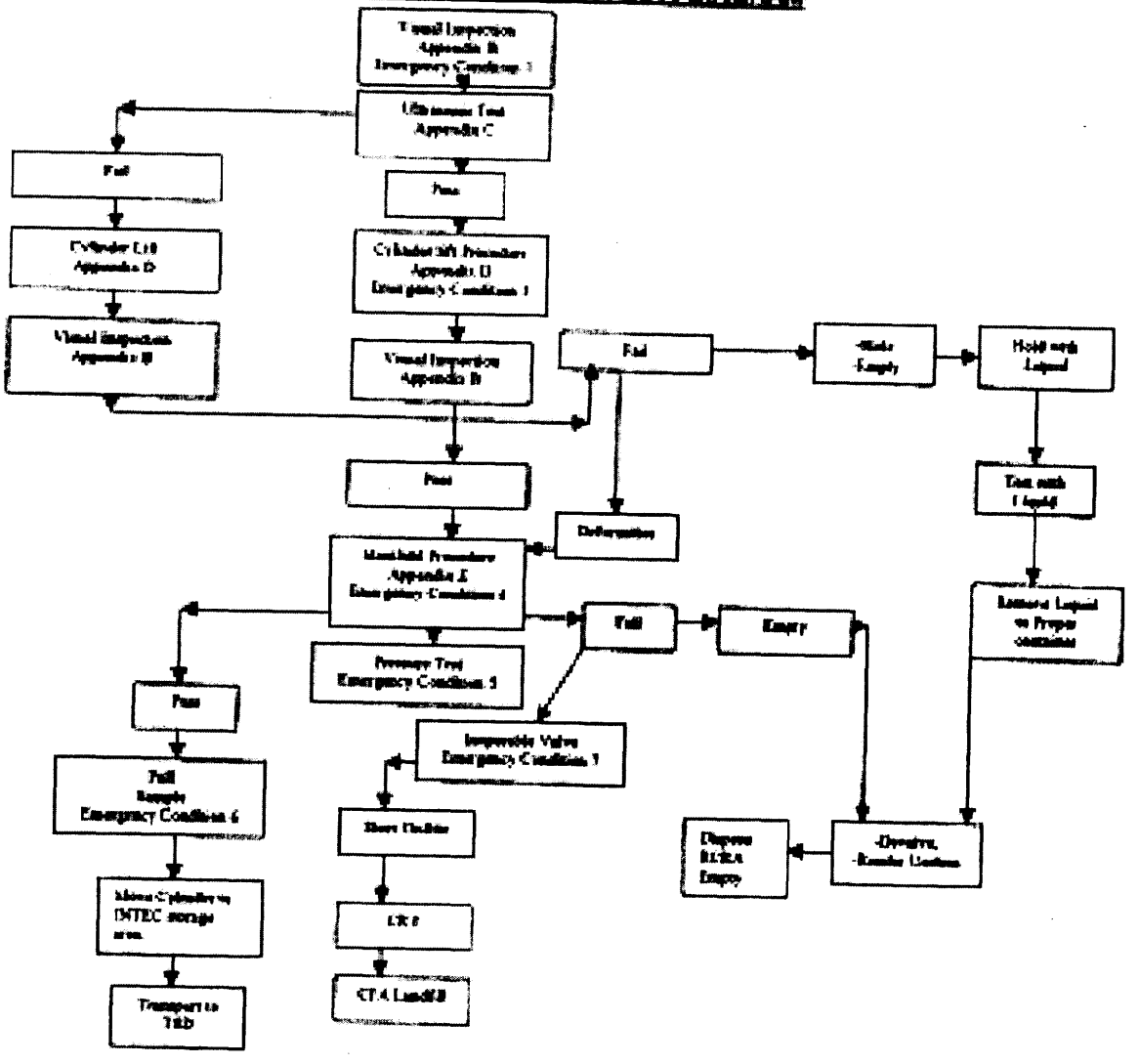
CYLINDER ABOVE GROUND CYLINDER FLOW DIAGRAM