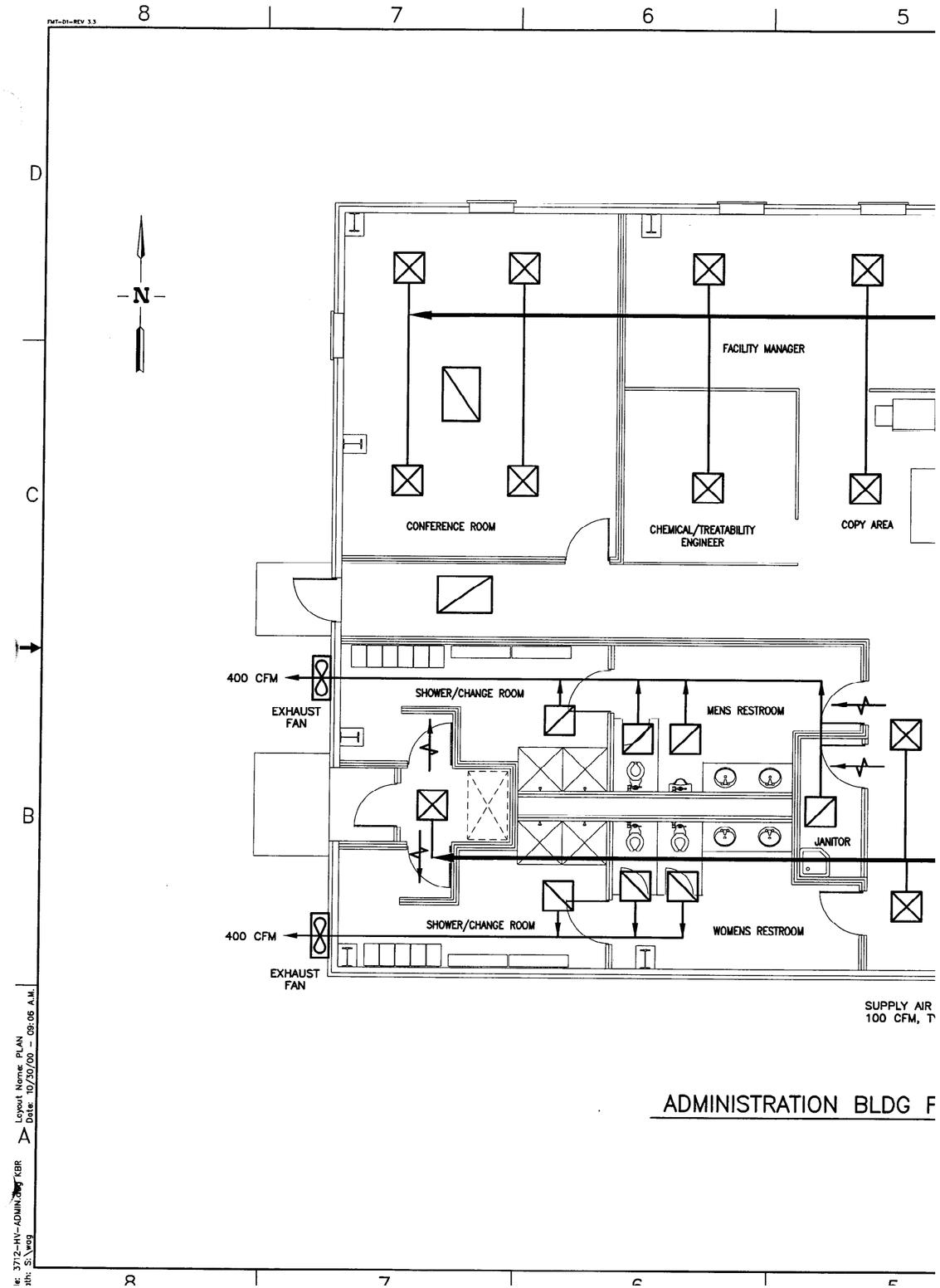
FMT-D1-REV 3.3
8
7
6
5
D
C
B
A
N
FACILITY MANAGER
CONFERENCE ROOM
CHEMICAL/TREATABILITY ENGINEER
COPY AREA
400 CFM
EXHAUST FAN
SHOWER/CHANGE ROOM
MENS RESTROOM
JANITOR
SHOWER/CHANGE ROOM
WOMENS RESTROOM
400 CFM
EXHAUST FAN
SUPPLY AIR
100 CFM, T
ADMINISTRATION BLDG F
Layout Name: PLAN
Date: 10/30/00 - 09:06 A.M.
KBR
3712-HV-ADMIN.dwg
S:\wag

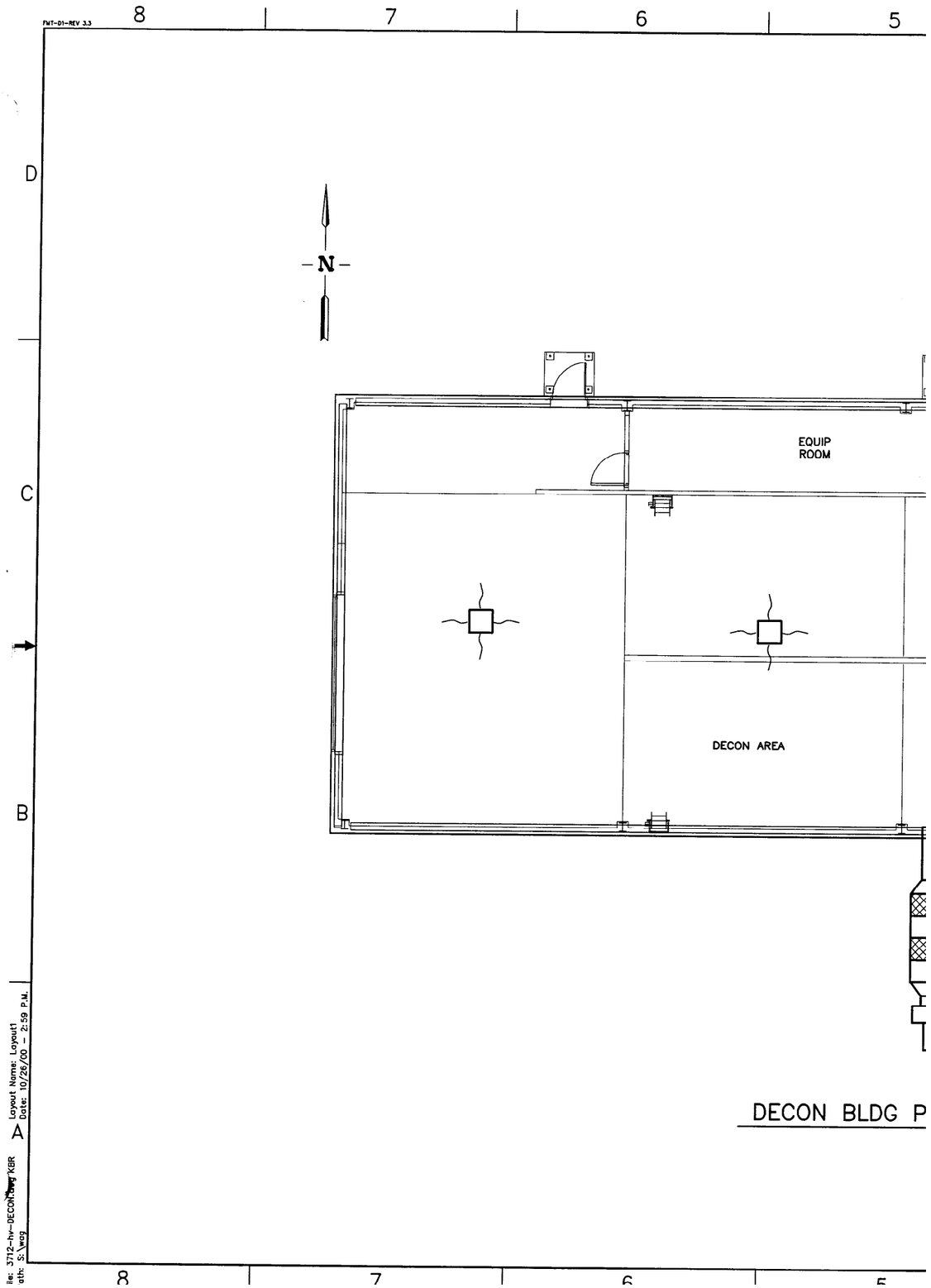
FWT-D1-REV 3.3
8
7
6
5
D
C
B
A
N
EQUIP
ROOM
DECON AREA
DECON BLDG P
Layout Name: Layout1
Date: 10/26/00 - 2:59 P.M.
KBR
ile: 3712-hv-DECON
ath: S:\wag

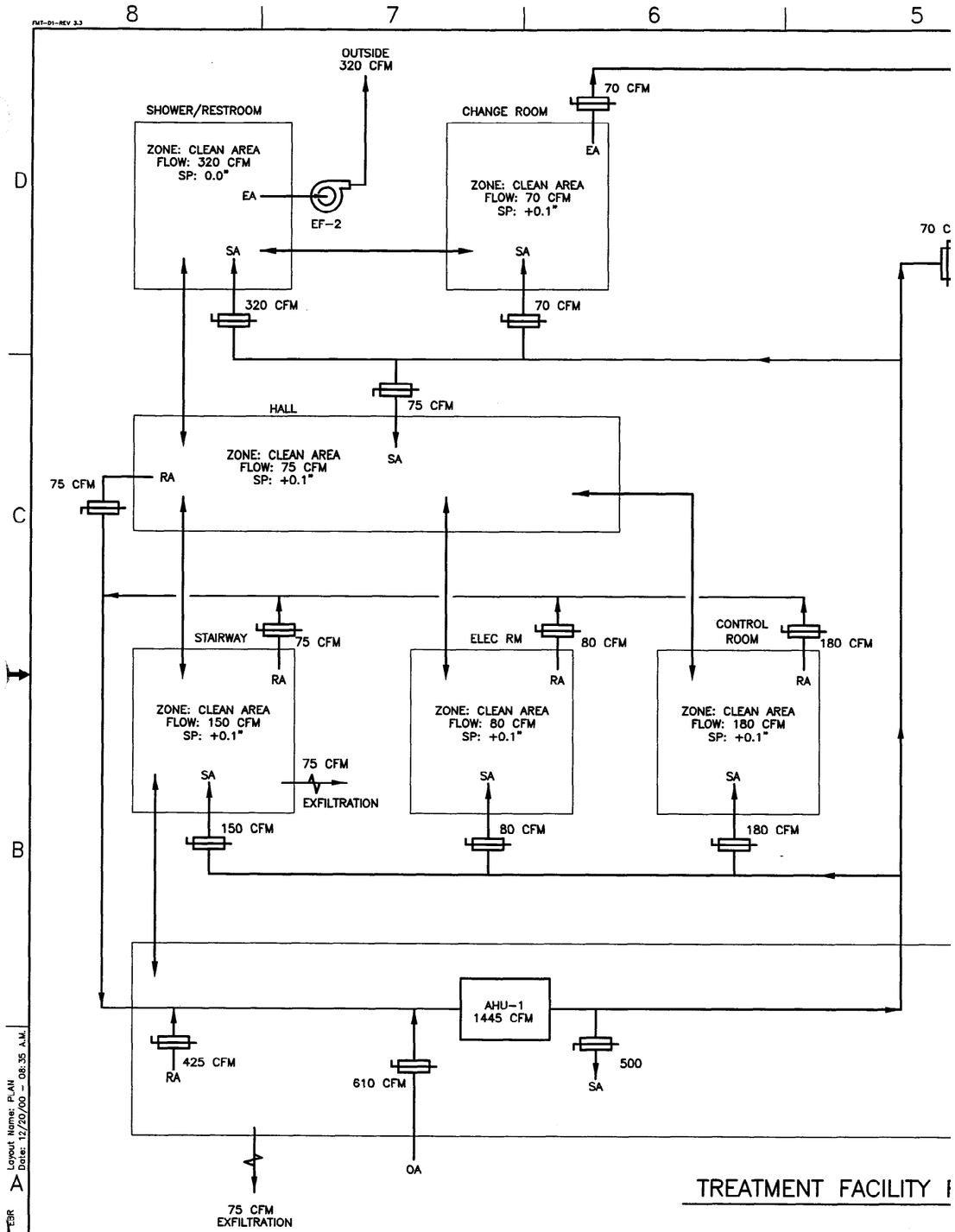
8
7
6
5
D
C
B
A
OUTSIDE
320 CFM
SHOWER/RESTROOM
ZONE: CLEAN AREA
FLOW: 320 CFM
SP: 0.0"
EA
EF-2
SA
320 CFM
CHANGE ROOM
70 CFM
EA
ZONE: CLEAN AREA
FLOW: 70 CFM
SP: +0.1"
SA
70 CFM
70 C
75 CFM
HALL
ZONE: CLEAN AREA
FLOW: 75 CFM
SP: +0.1"
SA
75 CFM
RA
STAIRWAY
75 CFM
RA
ZONE: CLEAN AREA
FLOW: 150 CFM
SP: +0.1"
SA
75 CFM
EXFILTRATION
150 CFM
ELEC RM
80 CFM
RA
ZONE: CLEAN AREA
FLOW: 80 CFM
SP: +0.1"
SA
80 CFM
CONTROL
ROOM
180 CFM
RA
ZONE: CLEAN AREA
FLOW: 180 CFM
SP: +0.1"
SA
180 CFM
AHU-1
1445 CFM
425 CFM
RA
610 CFM
500
SA
OA
75 CFM
EXFILTRATION
TREATMENT FACILITY

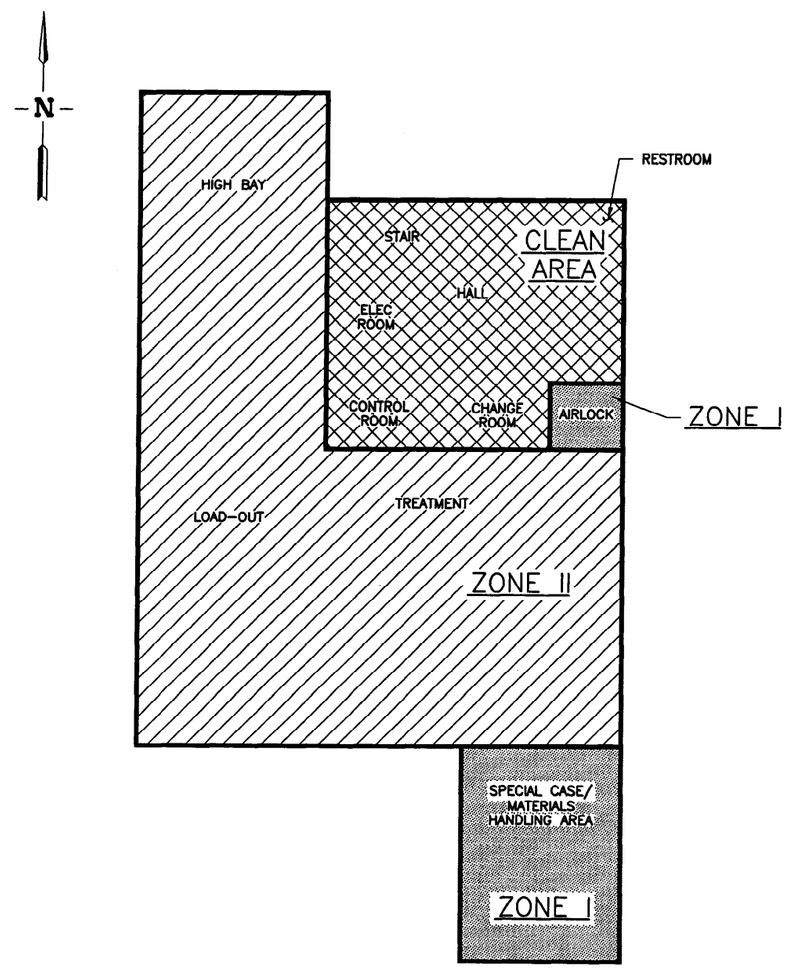


TREATMENT FACILITY PLAN ABOVE ELEVATION +12'