Appendix E

Drawing 515919, Coupling Assembly

NOTES:

1. REMOVE ALL BURRS AND SHARP EDGES.
2. REMOVE O-RING BEFORE MACHINING AND REINSTALL AFTER TO AVOID DAMAGE TO O-RING.

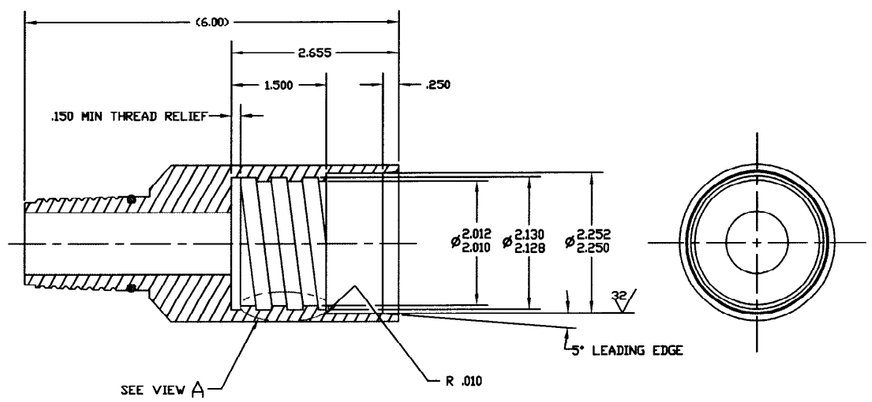

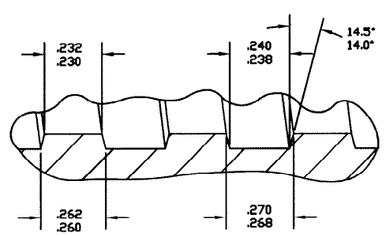

VIEW A
FEMALE SIDE THREAD
SCALE 4/1

REVISIONS		
REV	DESCRIPTION	EFFECTIVE DATE

QTY REQD	QUAL LEVEL	PART OR IDENTIFYING NO.	NOMENCLATURE OR DESCRIPTION	MATERIAL/SPECIFICATION OR VENDOR NAME	ITEM NO.
	3	-1	COUPLING	MAKE FROM ADAPTER BLANK VERTEK PART NO. 2365	1

PARTS LIST

DASH NO.	NEXT QTY REQD	FINAL QTY REQD	NEXT ASSY
-1			FINAL

APPLICATION

DIMENSIONING AND STABILITY ARE AMERICAN NATIONAL STANDARD UNLESS OTHERWISE SPECIFIED
SURFACE ROUGHNESS ARE IN INCHES
DIMENSIONS AND TOLERANCES ARE IN INCHES
TOLERANCES: X = ± .1, XX = ± .03, XXX = ± .010
FRACTIONS ± 1/8
ANGULAR ± 2°
DO NOT SCALE DRAWING

SUBCONTRACT NO.
REQUESTED R. JONES
DESIGNED D. ANDERSON
DRAWN J.A. LAWRENCE
PROJECT NO.
SPEC CODE
FOR REVIEW/APPROVAL SIGNATURES SEE DAR NO.
EFFECTIVE DATE

INEEL
BECHTEL BWXT IDAHO, LLC

WAG 7-13/14
INTEGRATED PROBING PROJECT
TYPE B PROBES

COUPLING

SIZE	CAGE CODE	INDEX CODE NUMBER AREA	TYPE	CL	DWG	DWG-515919	REV
D	01MF3	098	9999	48	090		

SCALE 1/1 SHEET 1 OF 1

File: 515919.dwg
Path: S:\Wag-7
ID LAWRJA
Layout Name: DETAILS
Date: 01/24/01 - 11:51 AM

Appendix F

Parts List

Appendix F

Parts List

Figure	INEEL Description/Application	Material	Part Name	Vendor's Part #	Source	Delivery Time	Quantity per Probe String	Total Quantity	Approx. Unit Cost	Partial Order Nov 2000
	Signal Cable	N/A	Cable Assembly, 25 ft, 4 pin, male-to-male Top: Turck *eurofast®* # BS8141-0 (Male) Bottom: Turck *eurofast®* # RS 4.4T (Male)	2363	ARA/Vertek 415 Waterman Road South Royalton, VT 05068 802-763-8348 802-763-8283 FAX vertek@ara.com	2-4 weeks	1	30	$125 each	15
	RS 485/232 Converter	N/A	RS-485 to RS-232 Convertor 3-meter cable Top: DB-9 Serial Bottom: Turck *eurofast®* # RK 4.4T (Female)	2230	ARA/Vertek 415 Waterman Road South Royalton, VT 05068 802-763-8348 802-763-8283 FAX vertek@ara.com	2-4 weeks	N/A	15	$175 each	15
	Thread Adapter Blank for Push Shoe Adapter Additional machining by INTEC CPP-663 to add female box thread (Drawing # 515919)	4340 carbon steel not heat-treated	Adapter 2.5" Blank/2.00 M.SL. Rope Thread)	2433	ARA/Vertek 415 Waterman Road South Royalton, VT 05068 802-763-8348 802-763-8283 FAX vertek@ara.com	2-4 weeks	N/A	4	$275 each	2
	Water Seal Adapter Wrench	N/A	Wrench, 1.375 Clamp	0101	ARA/Vertek 415 Waterman Road South Royalton, VT 05068 802-763-8348 802-763-8283 FAX vertek@ara.com	2 weeks	N/A	4	$160 each	2
	Water Seal Rod (12" Long)	4130 carbon steel not heat-treated	Extension, 2.00 S.L. Rope, x12", Unhard (1-3/8 Water Seal)	2503	ARA/Vertek 415 Waterman Road South Royalton, VT 05068 802-763-8348 802-763-8283 FAX vertek@ara.com	2-4 weeks	1	30	$275 each	15
	Water Seal Internal Parts	SST	Nut, 1-3/8 Water Seal (Dual)	0503	ARA/Vertek 415 Waterman Road South Royalton, VT 05068 802-763-8348 802-763-8283 FAX vertek@ara.com	2 weeks	1	30	$38 each	15
	Water Seal Internal Parts	Viton	Washer, 1-3/8 Dual Cable	0504	ARA/Vertek 415 Waterman Road South Royalton, VT 05068 802-763-8348 802-763-8283 FAX vertek@ara.com	2 weeks	2	60	$5 each	30
	Water Seal Internal Parts	Viton	Bushing, 1-3/8 Rubber (Single)	1531	ARA/Vertek 415 Waterman Road South Royalton, VT 05068 802-763-8348 802-763-8283 FAX vertek@ara.com	2 weeks	1	30	$8 each	15
	1-Foot Long 2" OD Rods (Probe Casings)	4130 carbon steel not heat-treated	Extension, 2.00 S.L. Rope x12", Unhard	2501	ARA/Vertek 415 Waterman Road South Royalton, VT 05068 802-763-8348 802-763-8283 FAX vertek@ara.com	4-8 weeks	1	30	$135 each	15
	2-Foot Long 2" OD Rods (Probe Casings)	4130 carbon steel not heat-treated	Extension, 2.00 S.L. Rope x24", Unhard	2502	ARA/Vertek 415 Waterman Road South Royalton, VT 05068 802-763-8348 802-763-8283 FAX vertek@ara.com	4-8 weeks	1	30	$145 each	15
	1-Meter Long 2" OD Rods (Probe Casings)	4130 carbon steel not heat-treated	Rod, 2.00 S.L. Rope Thread, 1-meter, Unhard	2430	ARA/Vertek 415 Waterman Road South Royalton, VT 05068 802-763-8348 802-763-8283 FAX vertek@ara.com	4-8 weeks	6	180	$155 each	90
	Soil Moisture Instrument 2" OD, w/ pass-through cable Upper Connector: Turck *eurofast®* # RK 4.4T (Female) Lower Connector: Turck *eurofast®* # FS 4.4 (Male Bulkhead)	4340 carbon steel heat-treated 304 SST sep. rings Hydlar electrodes	Module ASM, 2.00 DIG SMR 2.00 S.L. Rope Threads Only RS-485	2500	ARA/Vertek 415 Waterman Road South Royalton, VT 05068 802-763-8348 802-763-8283 FAX vertek@ara.com	4-8 weeks	3	90	$3420 each	45
	Probe Tip	4340 carbon steel not heat-treated	Tip, 2.00 S.L. Rope Dummy, Unhard	2504	ARA/Vertek 415 Waterman Road South Royalton, VT 05068 802-763-8348 802-763-8283 FAX vertek@ara.com	2-4 weeks	1	30	$175 each	15