Appendix A - Computer Code V&V

Project: Waste Area Group 5 RD/RA - Phase 1 **Calc. No.:** EDF-1406 Attachment **Rev.:** 0
Calc. Title: Stress Analysis for Lifting ARA-16 1000 Gal. Underground Tank
Originator: B. D. Hawkes **Date:** 04/17/00 **Checked By:** E. D. Uldrich **Date:** 04/17/00

Table A1. Computer code verification information.

Program	Version	Module	Computer	Model	V&V Reference
ABAQUS	5.8-1	Standard	Medusa	Sun Enterprise 5000	See list below - item 1

1. Hawkes, B. D., "Verification of HKS ABAQUS 5.8-1 for Sun Enterprise 5000 (Medusa) Compute Server-BDH-01-99," LMITCO Interdepartmental Communication, February 15,1999.

Project: Waste Area Group 5 RD/RA - Phase 1 **Calc. No.:** EDF-1406 Attachment **Rev.:** 0
Calc. Title: Stress Analysis for Lifting ARA-16 1000 Gal. Underground Tank
Originator: B. D. Hawkes **Date:** 04/17/00 **Checked By:** E. D. Uldrich **Date:** 04/17/00

Appendix B - Drawing

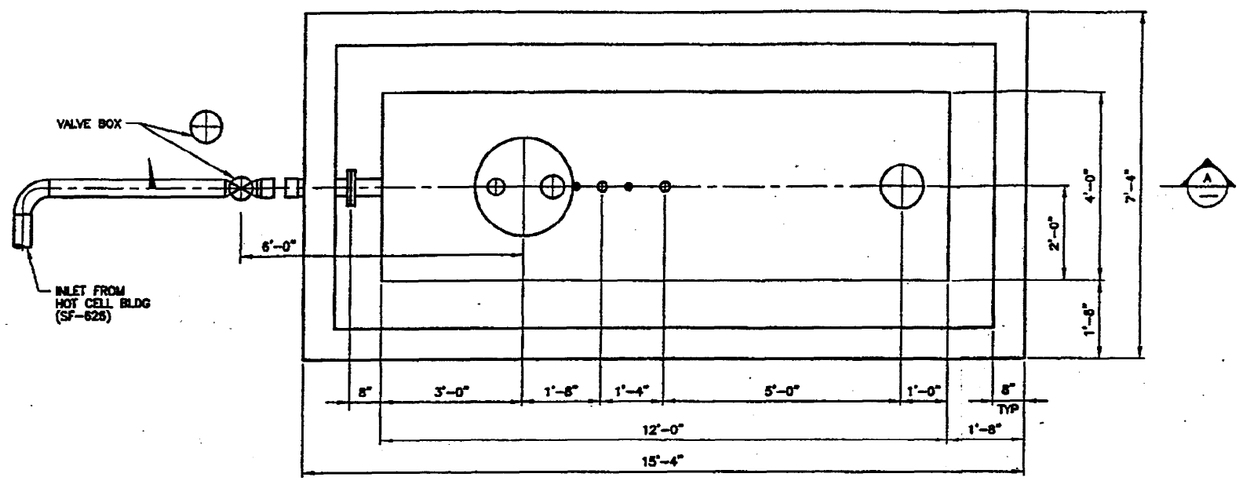

PLAN
SCALE: 3/4"=1'-0"

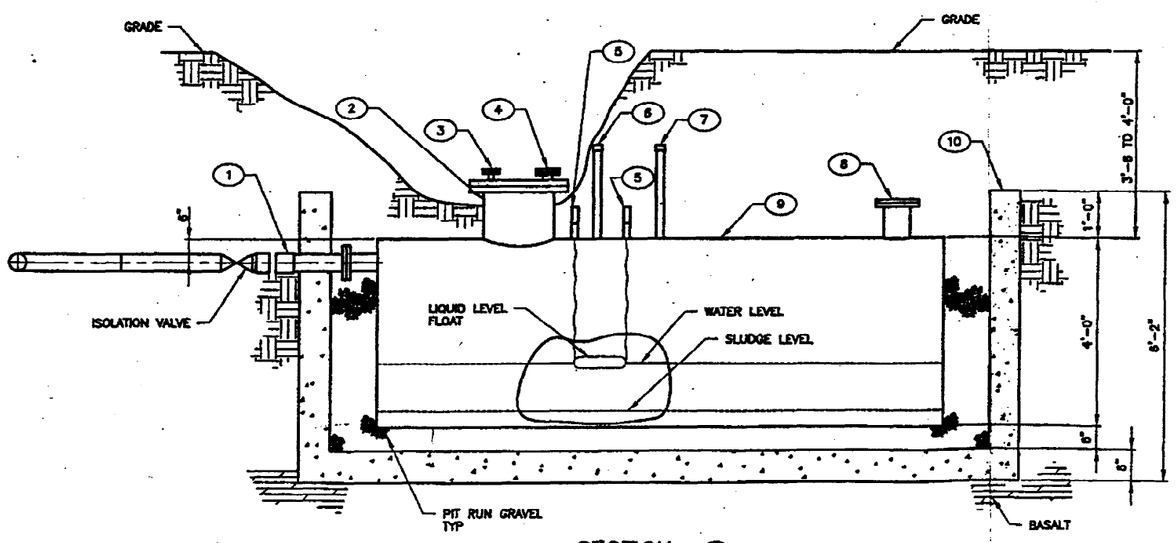

SECTION A
SCALE: 3/4"=1'-0"

LEGEND

1. 4" DIAMETER INLET PIPE, 304 SST.
2. 18" DIAMETER MANHOLE. EXTENDS 12" ABOVE TANK. FLANGED CLOSED. (EXPOSED)
3. 1" DIAMETER PIPE (FORMER HIGH LEVEL ALARM ELECTRODE). CUT AND BLIND FLANGE 18" ABOVE TANK
4. 2" DIAMETER SST PIPE (FORMER PUMP RETURN LINE). CUT AND BLIND FLANGED 18" ABOVE TANK.
5. 1 1/4 X 4" PIPE NIPPLE WITH EXTENSION SUPPORT GUIDE CABLES FOR EXISTING LIQUID LEVEL FLOAT.
6. 1 1/2" PIPE COUPLING (FORMER TANK LEVEL INDICATOR SUPPORT) WITH EXTENSION. CUT AND CAPPED APPROXIMATELY 24" ABOVE TANK.
7. 1 1/2" PIPE COUPLING (FORMER TANK VENT). CUT AND CAPPED APPROXIMATELY 24" ABOVE TANK.
8. 6" DIAMETER FLANGED SUBMERSIBLE PUMP ACCESS (REMOVED). EXTENDS 8" ABOVE TANK. BLIND FLANGED CLOSED, APPROXIMATELY 3' BELOW GRADE.
9. 1000 GALLON SST UNDERGROUND TANK, SINGLE WALL, FLAT ENDS. MANUFACTURED BY UNITED STATES STEEL (18-8L).
10. CONCRETE FOUNDATION.

Liquid: 312 gal 0.998 g/cm³
Solids: 4.5 gal 1.185 g/cm³

Tank wall thickness: .086 in
.104 in (12 gauge)
.134 in (10 gauge)

Tank wall metal: 304 stainless
"18-8L"
% Cr % Ni Low Carbon .03% Max

FOR DRAWING INDEX SEE DRAWING NO. T-1	SUBCONTRACT NO.	INEEL
SCALE: 3/4" = 1'-0"	REQUESTER: DESIGN: DRAWN: ROB HERGESHEIMER PROJECT NO. SPEC CODE	POWER BURST FACILITY & AUXILIARY REACTOR AREA OPERABLE UNIT 5-12
	FOR REVIEW/APPROVAL SIGNATURES SEE DAR NO.	ARA-16 WASTE TANK
DESIGN PHASE: CONCEPTUAL		SIZE D CAGE CODE INDEX CODE NUMBER AREA TYPE CL ORIG 090 DWG- REV
QUALITY LEVEL: 3	EFFECTIVE DATE:	SCALE: NONE SHEET 1 OF 1

Project: Waste Area Group 5 RD/RA - Phase 1 **Calc. No.:** EDF-1406 Attachment **Rev.:** 0
Calc. Title: Stress Analysis for Lifting ARA-16 1000 Gal. Underground Tank
Originator: B. D. Hawkes **Date:** 04/17/00 **Checked By:** E. D. Uldrich **Date:** 04/17/00

Appendix C - Mathcad Calculations

ARA Tank Calculations

An I-DEAS finite element model of the ARA tank has been created. These are the general calculations used to determine weights used for the ABAQUS model.

$r := 24 \cdot in$

$L := 144 \cdot in$

Calculate the volume of the tank

$V := \pi r^2 \cdot L$

$V = 1128.04\,gal$

$\gamma := 64 \cdot \frac{lbf}{ft^3}$

Weight density of the fluid in the tank

$W_{fluid} := \gamma \cdot V$

Weight of the fluid in the tank

$W_{fluid} = 9650.97\,lbf$

The tank wall thickness is estimated to be one of the following:

$th_{086} := 0.086 \cdot in$

$th_{104} := 0.104 \cdot in$

$th_{134} := 0.134 \cdot in$

Weight of the tank from I-DEAS

$w_{086} := 764.7 \cdot lbf$

$w_{104} := 898.7 \cdot lbf$

$w_{134} := 1122.5 \cdot lbf$

Mass of the tank (used in ABAQUS)

$M_{086} := \frac{w_{086}}{g}$

$M_{104} := \frac{w_{104}}{g}$

$M_{134} := \frac{w_{134}}{g}$

$M_{086} = 1.981 \frac{lbf \cdot sec^2}{in}$

$M_{104} = 2.328 \frac{lbf \cdot sec^2}{in}$

$M_{134} = 2.907 \frac{lbf \cdot sec^2}{in}$

$$M_{full} := \frac{W_{fluid}}{g}$$

Mass of the fluid for a full tank

$$M_{full} = 24.997 \frac{lbf \bullet sec^2}{in}$$

$$M_{75} := M_{full} \bullet 0.75$$

$$M_{50} := M_{full} \bullet 0.5$$

$$M_{33} := M_{full} \bullet 0.333$$

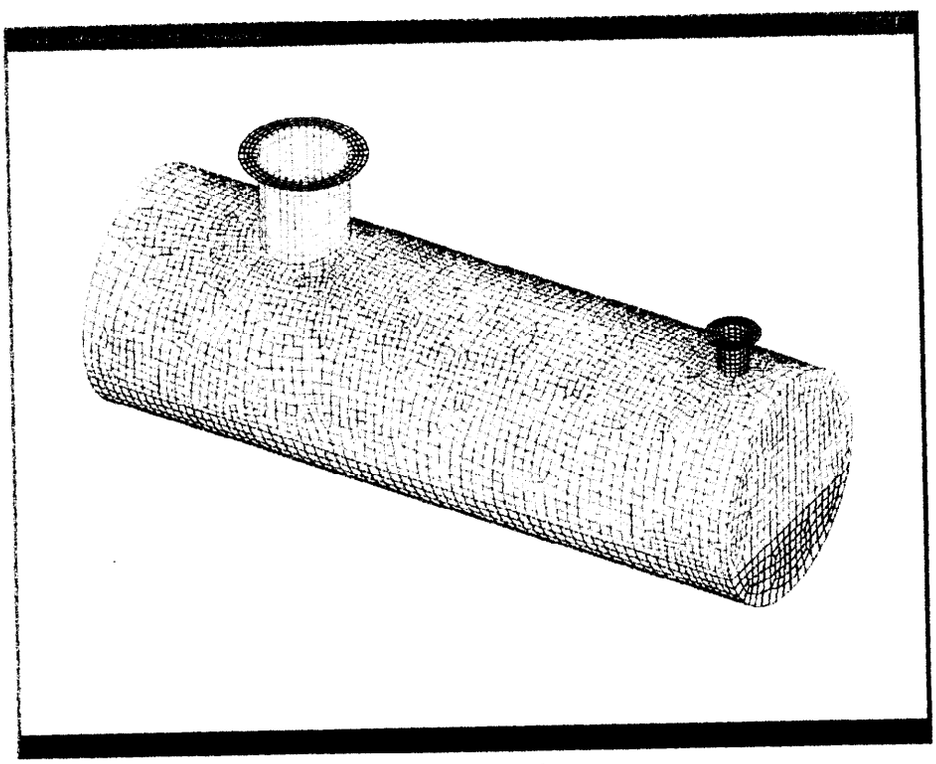

I-DEAS finite element model.

E:\bdh\Math_docs\ARA_tank.mcd

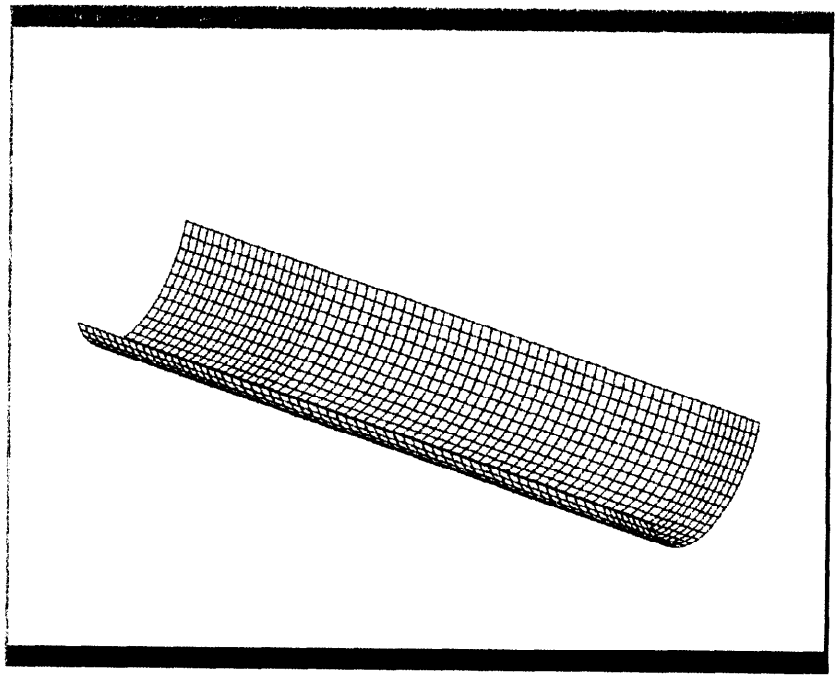

The density of these elements have been increased to include the mass of the fluid in the tank.

$\rho_{sst} := 0.00074 \cdot \frac{lbf \cdot sec^2}{in^4}$ **Density of stainless steel**

$V_{w086} := 719.4 \cdot in^3$ **Volume of the elements with increased density (From I-DEAS model) with 0.086 in wall.**

$V_{w104} := 870.0 \cdot in^3$

$V_{w134} := 1121 \cdot in^3$

$\rho_{086\_full} := \rho_{sst} + \frac{M_{full}}{V_{w086}}$ **Calculate the additional density of the weighted elements to account for the mass of the fluid.**

$\rho_{086\_full} = 0.0354867 \frac{lbf \cdot sec^2}{in^4}$

$\rho_{086\_75} := \rho_{sst} + \frac{M_{75}}{V_{w086}}$

$\rho_{086\_75} = 0.02680003 \frac{lbf \cdot sec^2}{in^4}$

$$\rho_{086\_50} := \rho_{sst} + \frac{M_{50}}{V_{w086}} \qquad \rho_{086\_50} = 0.0181134 \frac{lbf \cdot sec^2}{in^4}$$

$$\rho_{086\_33} := \rho_{sst} + \frac{M_{33}}{V_{w086}} \qquad \rho_{086\_33} = 0.0123107 \frac{lbf \cdot sec^2}{in^4}$$

$$\rho_{104\_full} := \rho_{sst} + \frac{M_{full}}{V_{w104}} \qquad \rho_{104\_full} = 0.0294719 \frac{lbf \cdot sec^2}{in^4}$$

$$\rho_{104\_75} := \rho_{sst} + \frac{M_{75}}{V_{w104}} \qquad \rho_{104\_75} = 0.02228895 \frac{lbf \cdot sec^2}{in^4}$$

$$\rho_{104\_50} := \rho_{sst} + \frac{M_{50}}{V_{w104}} \qquad \rho_{104\_50} = 0.015106 \frac{lbf \cdot sec^2}{in^4}$$

$$\rho_{104\_33} := \rho_{sst} + \frac{M_{33}}{V_{w104}} \qquad \rho_{104\_33} = 0.0103077 \frac{lbf \cdot sec^2}{in^4}$$

$$\rho_{134\_full} := \rho_{sst} + \frac{M_{full}}{V_{w134}} \qquad \rho_{134\_full} = 0.0230386 \frac{lbf \cdot sec^2}{in^4}$$

$$\rho_{134\_75} := \rho_{sst} + \frac{M_{75}}{V_{w134}} \qquad \rho_{134\_75} = 0.01746399 \frac{lbf \cdot sec^2}{in^4}$$

$$\rho_{134\_50} := \rho_{sst} + \frac{M_{50}}{V_{w134}} \qquad \rho_{134\_50} = 0.0118893 \frac{lbf \cdot sec^2}{in^4}$$

$$\rho_{134\_33} := \rho_{sst} + \frac{M_{33}}{V_{w134}} \qquad \rho_{134\_33} = 0.0081654 \frac{lbf \cdot sec^2}{in^4}$$