Appendix A

Design Drawings for Waste Area Group 5, Remedial Design/Remedial Action, Operable Unit 5-12, Phase 1 Sites

REVISIONS		
REV	DESCRIPTION	EFFECTIVE DATE:

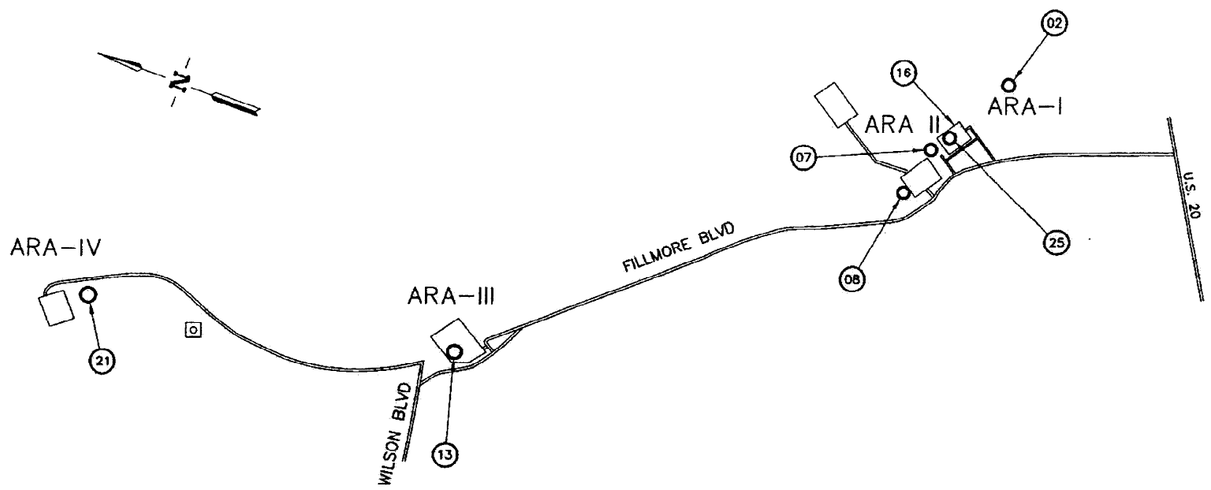

AUXILIARY REACTOR AREA MAP

SCALE: NONE

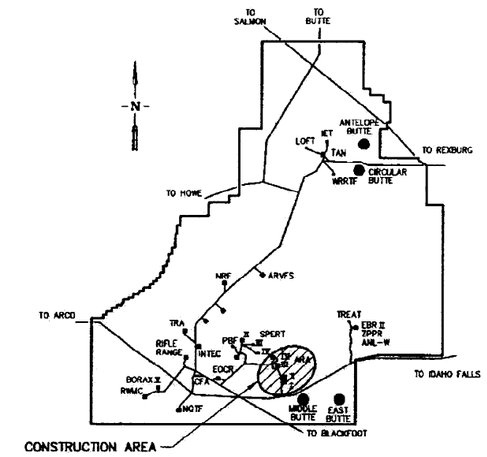

SITE MAP

SCALE: NONE

DRAWING INDEX

PAGE NO.	DWG NO.	A-E DWG NO.	REV	DRAWING TITLE
1	513820	T-1	–	AREA, SITE MAP AND DRAWING INDEX
2	513821	T-2	–	LEGEND, ABBREVIATIONS AND GENERAL NOTES
3	513822	C-1	–	ARA-02 SANITARY SEWER SYSTEM DEMOLITION PLAN
4	513823	C-2	–	ARA-07 SEEPAGE PIT DEMOLITION PLAN & SECTION
5	513824	C-3	–	ARA-08 SEEPAGE PIT DEMOLITION PLAN & SECTION
6	513825	C-4	–	ARA-13 SEWER SYSTEM DEMOLITION PLAN, SECTIONS & DETAILS
7	513826	C-5	–	ARA-16 WASTE TANK AND DRAIN LINE DEMOLITION PLAN
8	513827	C-6	–	ARA-21 SEPTIC SYSTEM DEMOLITION PLAN AND DETAILS
9	513828	C-7	–	ARA-02 DEMOLITION SECTIONS AND DETAILS
10	513829	C-8	–	ARA-16/ARA-25 DEMOLITION SECTIONS AND DETAILS
11	513830	C-9	–	ARA-16 DEMOLITION SECTION AND DETAIL

AUXILIARY REACTOR AREA LAND DISPOSAL UNITS

NO.	TITLE
02	ARA-02: ARA-I SANITARY WASTE SYSTEM AND SEEPAGE PIT
07	ARA-07: ARA-II SEEPAGE PIT TO EAST
08	ARA-08: ARA-II SEEPAGE PIT TO WEST
13	ARA-13: ARA-III SANITARY SEWER SYSTEM AND SEPTIC TANK
16	ARA-16: ARA-I RADIONUCLIDE TANK
21	ARA-21: ARA-IV TEST AREA SEPTIC TANK AND SEEPAGE PIT NO. 2
25	ARA-25: ARA-I SOIL BENEATH THE ARA-626 HOT CELL

INDEX CODE NUMBER				
AREA	TYPE	CL	ORIG	SERIAL
070	D100	01	090	
066	D100	01	090	
063	D100	01	090	

FOR DRAWING INDEX SEE DRAWING NO. 513820

NO SCALE

DESIGN PHASE: AFC

QUALITY LEVEL: 3

SUBCONTRACT NO.

REQUESTER: F. WEBBER

DESIGN: J. HARRIS

DRAWN: ROB HERGESHEIMER

PROJECT NO. 020991

SPEC CODE

FOR REVIEW/APPROVAL SIGNATURES SEE DAR NO. 45826

EFFECTIVE DATE: 5/30/2000

INEEL

WASTE AREA GROUP 5
REMEDIAL DESIGN/REMEDIAL ACTION
PHASE I

AREA, SITE MAP AND DRAWING INDEX

SIZE	CAGE CODE	INDEX CODE NUMBER				DWG-	REV
		AREA	TYPE	CL	ORIG		
D		068	0100	01	090	513820	

SCALE: NONE

SHEET T-1

File: T-1.dwg
Path: G:\wag-5\DEMO-PACKAGE\
ID: RDH5
Layout Name: D Size
Date: 05/25/00 - 12:22 P.M.

REVISIONS		
REV	DESCRIPTION	EFFECTIVE DATE

SYMBOL KEY

- A — SECTION LETTER
- A-1 — A/E SHEET REFERENCE
- A — VIEW OR ELEVATION LETTER
- A-1 — A/E SHEET REFERENCE
- 1 — DETAIL NUMBER
- — SAME SHEET REFERENCE
- EXISTING UNDERGROUND UTILITIES
- EXISTING MANHOLE
- EXISTING BUILDINGS
- EXISTING ITEMS TO BE REMOVED

MATERIALS

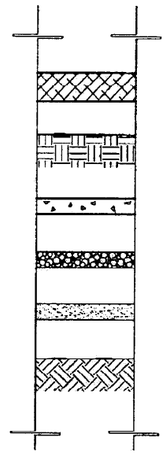

- BASALT
- COMPACTED FILL
- CONCRETE
- GRANULAR FILL
- SAND
- UNDISTURBED EARTH

SUMMARY OF WORK

SITES	SELECTED REMEDY
ARA-02 SANITARY WASTE SYSTEM	REMOVAL, EX SITU THERMAL TREATMENT, AND DISPOSAL.
ARA-16 RADIONUCLIDE TANK (TWO OPTIONS)	OPTION 1 – REMOVAL OF THE ARA-16 RADIONUCLIDE TANK AND CONTENTS INTACT. REMOVAL OF SECTIONED ASSOCIATED PIPING. SHIP FOR OFF-SITE EX SITU THERMAL TREATMENT AND DISPOSAL (EDF-1406). EXCAVATION OF THE CONCRETE VAULT AND DISPOSAL AT AN APPROVED FACILITY. OPTION 2 – REMOVAL OF THE ARA-16 RADIONUCLIDE TANK CONTENTS FOR SHIPMENT TO AN OFF-SITE FACILITY FOR THERMAL TREATMENT AND DISPOSAL (EDF-1405). DECONTAMINATION AND EXCAVATION OF THE TANK AND ASSOCIATED PIPING (EDF-1407) AND DISPOSAL AT THE RWMC. EXCAVATION OF THE CONCRETE VAULT AND DISPOSAL AT AN APPROVED FACILITY.
ARA-07 SEEPAGE PIT TO EAST	REMOVAL AND DISPOSAL OF WOODEN COVER AND ABOVE-GROUND BLOCKS AT AN APPROVED ON-SITE FACILITY. REMOVAL AND RECYCLING OF CHAIN-LINK FENCING. BACKFILL PIT WITH EARTHEN MATERIALS.
ARA-08 SEEPAGE PIT TO WEST	REMOVAL AND DISPOSAL OF CONCRETE SLABS AT AN APPROVED ON-SITE FACILITY. BACKFILL PIT WITH EARTHEN MATERIALS.
ARA-13 SANITARY SEWER LEACH FIELD AND SEPTIC TANK	SAMPLING OF MANHOLES, TANK AND DISTRIBUTION BOX CONTENTS. BASED ON SAMPLING RESULTS: –REMOVAL AND DISPOSAL OF MANHOLE, SEPTIC TANK, DISTRIBUTION BOX, AND CONTENTS FOR OFF-SITE DISPOSAL AT AN APPROVED FACILITY. OR –ABANDONMENT IN-PLACE USING EARTHEN BACKFILL. WORK PLAN DRAWINGS SHOW REMOVAL OF COMPONENTS.
ARA-21 TEST AREA IV SEPTIC TANK AND LEACH PIT NO. 2	SAMPLING OF TANK AND CHLORINE CONTACT TANK CONTENTS. BASED ON SAMPLING RESULTS: –REMOVAL AND DISPOSAL OF TANK, CHLORINE CONTACT TANK, AND CONTENTS AT AN APPROVED FACILITY. BACKFILL PIT WITH EARTHEN MATERIALS. OR –ABANDON TANKS AND SEEPAGE PIT IN-PLACE USING EARTHEN BACKFILL. WORK PLAN DRAWINGS SHOW REMOVAL OF TANK AND CHLORINATION CONTACT TANK AND ABANDONMENT IN-PLACE OF SEEPAGE PIT.
ARA-25 SOILS BENEATH THE ARA-626 HOT CELLS	REMOVAL AND DISPOSAL OF ROOF STRUCTURE AT AN APPROVED ON-SITE FACILITY. REMOVAL AND DISPOSAL OF CONCRETE AND SOILS AT AN APPROVED ON-SITE FACILITY.

ABBREVIATIONS

APPROX	-	APPROXIMATE
BLDG	-	BUILDING
CI	-	CAST IRON
CLR	-	CLEAR
CONC	-	CONCRETE
DIA ø	-	DIAMETER
GAL	-	GALLON
LG	-	LENGTH OR LONG
NO.	-	NUMBER
NTS	-	NOT TO SCALE
PLCS	-	PLACES
SCHED	-	SCHEDULE
SH	-	SHEET
SST	-	STAINLESS STEEL
TYP	-	TYPICAL
W/	-	WITH
XHCI	-	EXTRA HEAVY CAST IRON

GENERAL NOTES

1. ALL DIMENSIONS SHOWN ON THE DRAWINGS SHALL BE VERIFIED PRIOR TO COMMENCING WORK
2. RETAIN AND PROTECT ALL EXISTING FACILITIES UNLESS OTHERWISE NOTED.

REVISION: 0
ORIGINAL SIGNED BY: KURT D. FRITZ
DATE ORIGINAL SIGNED: 5/30/2000
SEAL NUMBER: 9404
ORIGINAL STORED AT: EROB DOCUMENT CONTROL

PROFESSIONAL ENGINEER REGISTERED 9404 STATE OF IDAHO KURT D. FRITZ

INDEX CODE NUMBER				
AREA	TYPE	CL	DWG	SERIAL
070	0100	01	090	
068	0100	01	090	
063	0100	01	090	

FOR DRAWING INDEX SEE DRAWING NO. 513820	SUBCONTRACT NO.	INEEL BECHTEL BWXT IDAHO, LLC
NO SCALE	REQUESTER: F. WEBBER DESIGN: D. SHANKLIN DRAWN: ROB HERGESHEIMER PROJECT NO. 020991 SPEC CODE	WASTE AREA GROUP 5 REMEDIAL DESIGN/REMEDIAL ACTION PHASE I
DESIGN PHASE: AFC	FOR REVIEW/APPROVAL SIGNATURES SEE DAR NO. 45926	LEGEND, ABBREVIATIONS AND GENERAL NOTES
QUALITY LEVEL: 3	EFFECTIVE DATE: 5/30/2000	SIZE D; CAGE CODE; INDEX CODE NUMBER AREA 068 TYPE 9999 CL 38 DWG 090; DWG-513821; REV; SCALE: NONE; SHEET T-2

File: T-2.dwg Path: G:\wag-5\DEMO-PACKAGE\ Drawn in Model Space D: RDM5 AE Date: 05/25/00 – 12:23 P.M.

REVISIONS		
REV	DESCRIPTION	EFFECTIVE DATE:

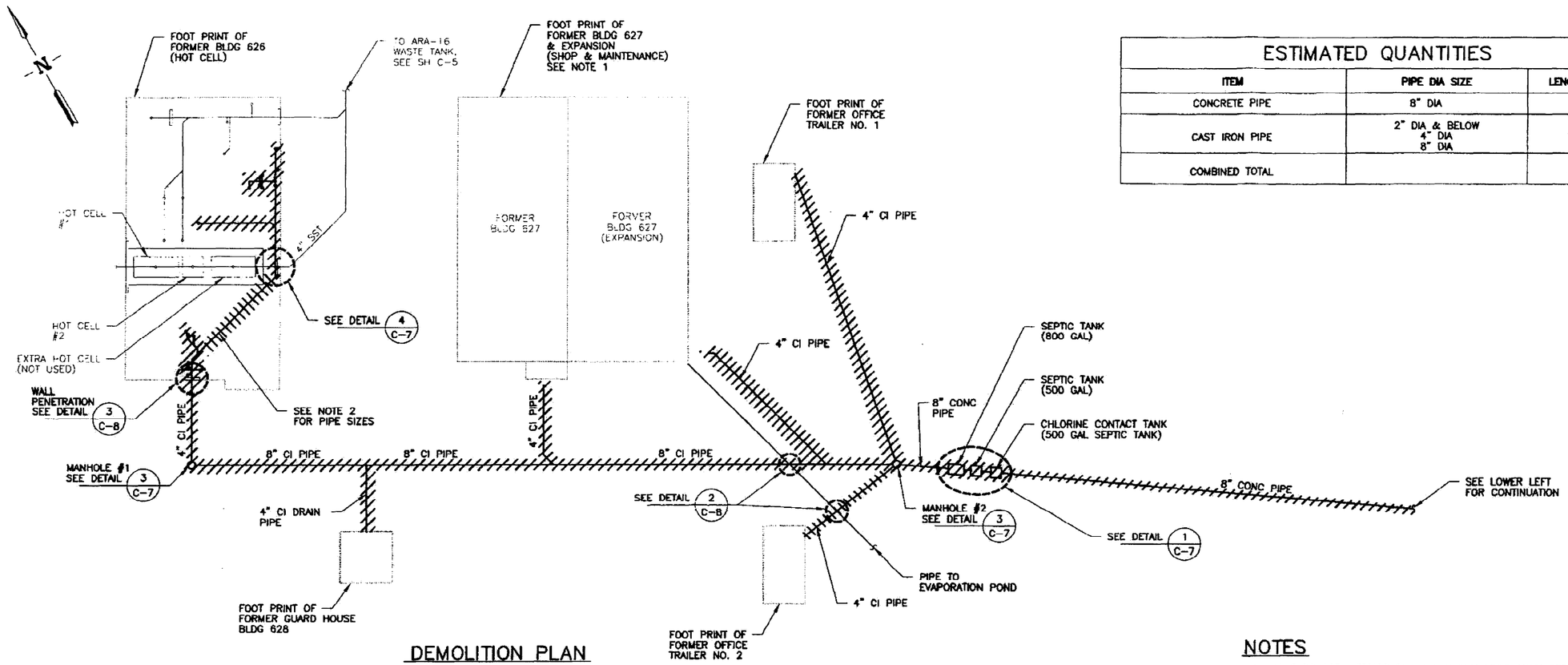

DEMOLITION PLAN

SCALE: 1"=20.0'

ESTIMATED QUANTITIES

ITEM	PIPE DIA SIZE	LENGTH (FT)
CONCRETE PIPE	8" DIA	419
CAST IRON PIPE	2" DIA & BELOW 4" DIA 8" DIA	41 262 267
COMBINED TOTAL		989

NOTES

1. ALL BLDG 627 INTERIOR SANITARY SEWER LINES HAVE BEEN REMOVED.
2. PIPES WITHIN BLDG 626 FOOT PRINT VARY IN SIZE FROM 2" TO 4".
3. ESTIMATED QUANTITIES PERTAIN TO WORK THIS SHEET ONLY.

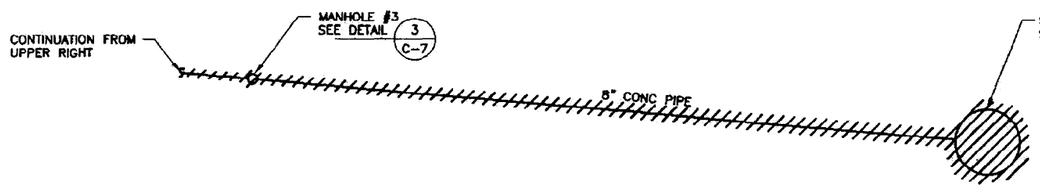

KEY PLAN

REVISION: 0
ORIGINAL SIGNED BY: KURT D. FRITZ
DATE ORIGINAL SIGNED: 5/30/2000
SEAL NUMBER: 9404
ORIGINAL STORED AT: EROB DOCUMENT CONTROL

PROFESSIONAL ENGINEER REGISTERED 9404 STATE OF IDAHO KURT D. FRITZ

FOR DRAWING INDEX SEE DRAWING NO. 513820	SUBCONTRACT NO.
SCALE: 1" = 20.0'	REQUESTER: F. WEBBER
	DESIGN: J. HARRIS
	DRAWN: ROB HERGESHEIMER
	PROJECT NO. 020991
	SPEC CODE
DESIGN PHASE: AFC	FOR REVIEW/APPROVAL SIGNATURES SEE DAR NO. 45926
QUALITY LEVEL: 3	EFFECTIVE DATE: 5/30/2000

INEEL (Bechtel BWXT Idaho, LLC)

WASTE AREA GROUP 5
REMEDIAL DESIGN/REMEDIAL ACTION
PHASE 1

ARA-02 SANITARY SEWER SYSTEM DEMOLITION PLAN

SIZE	CAGE CODE	INDEX CODE NUMBER				DWG-	REV
		AREA	TYPE	G	ORIG		
D		068	0300	50	090	513822	

SCALE: 1"=20.0' SHEET C-1

File: C-1.dwg ID: RDH5 Layout Name: D Size
Path: G:\wag-5\DEMO-PACKAGE\ Date: 05/25/00 - 12:43 P.M.

REVISIONS		
REV	DESCRIPTION	EFFECTIVE DATE:

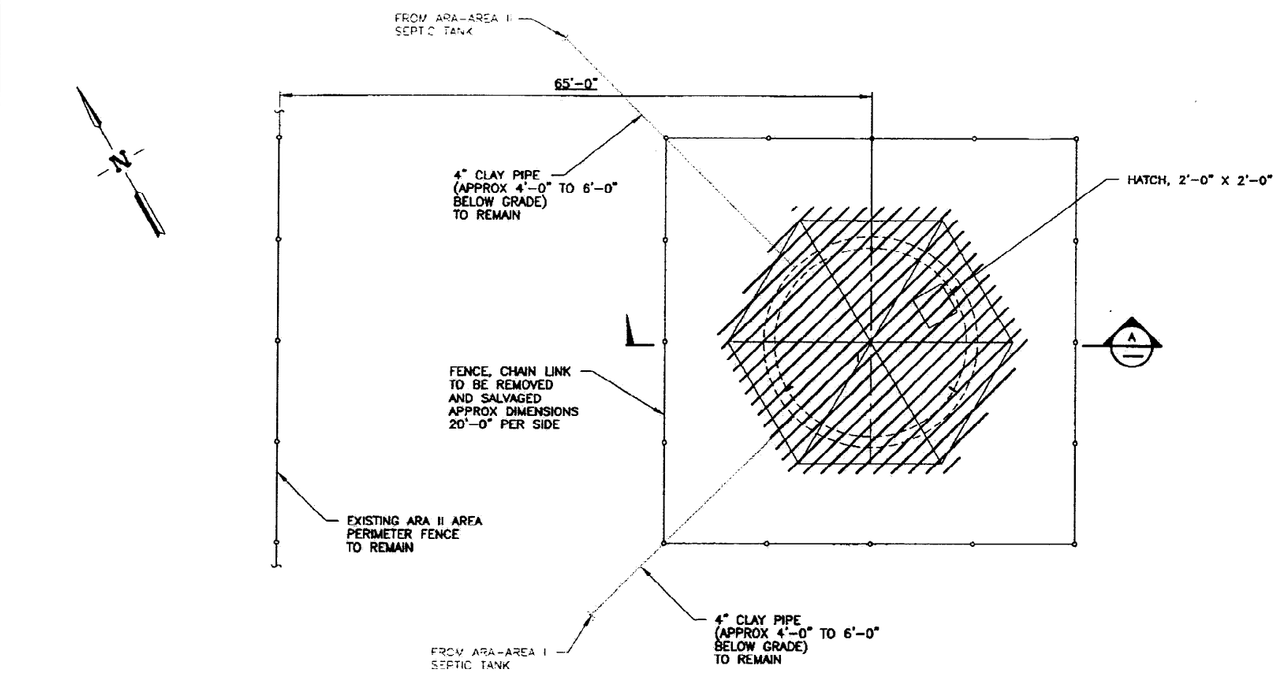

ARA-07 DEMOLITION PLAN

SCALE: 1/4"=1'-0"

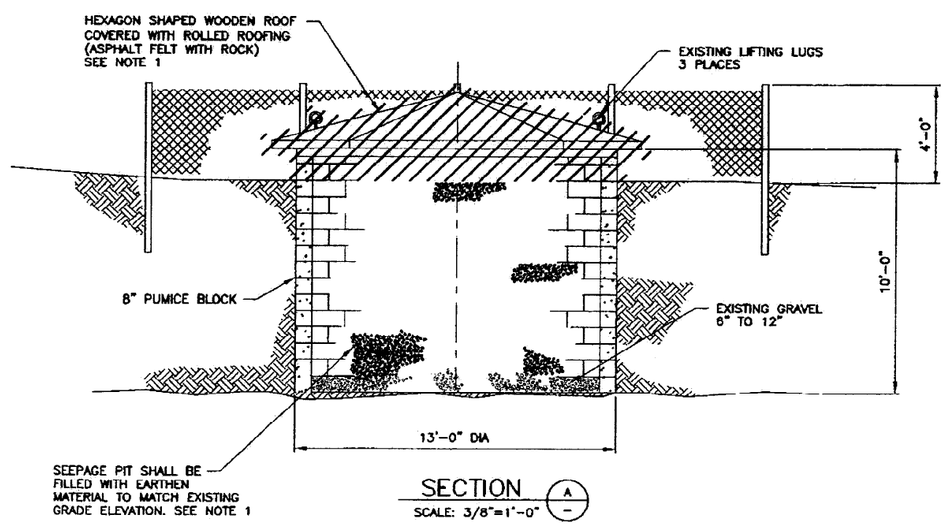

SECTION A

SCALE: 3/8"=1'-0"

NOTES

1. REMOVE SEEPAGE PIT ROOF AND PUMICE BLOCKS TO 2'-0" BELOW EXISTING GRADE. REMAINING PIT TO BE BACK FILLED USING EARTHEN MATERIAL TO MATCH EXISTING GRADE ELEVATION. TOP TWO COURSES OF PUMICE BLOCKS ARE SET IN MORTAR.
2. ALL COMPONENTS EXTENDING ABOVE GRADE SHALL BE REMOVED.

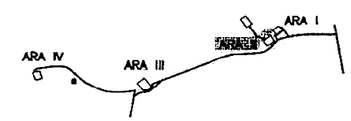

KEY PLAN

REVISION: 0
ORIGINAL SIGNED BY: KURT D. FRITZ
DATE ORIGINAL SIGNED: 5/30/2000
SEAL NUMBER: 9404
ORIGINAL STORED AT: EROB DOCUMENT CONTROL

PROFESSIONAL ENGINEER REGISTERED 9404 STATE OF IDAHO KURT D. FRITZ

FOR DRAWING INDEX SEE DRAWING NO.	513820
SCALE: 1/4" = 1'-0"	
SCALE: 3/8" = 1'-0"	
DESIGN PHASE:	AFC
QUALITY LEVEL:	3
SUBCONTRACT NO.	
REQUESTER:	F. WEBBER
DESIGN:	D. SHANKLIN
DRAWN:	J.A. LAWRENCE
PROJECT NO.	020991
SPEC CODE	
FOR REVIEW/APPROVAL SIGNATURES SEE DAR NO.	45926
EFFECTIVE DATE:	5/30/2000

INEEL

WASTE AREA GROUP 5
REMEDIAL DESIGN/REMEDIAL ACTION
PHASE I

ARA-07 SEEPAGE PIT DEMOLITION PLAN & SECTION

SIZE	CAGE CODE	INDEX CODE NUMBER: AREA	TYPE	SI	ORG	DWG-513823	REV
D		070	0300	50	090		

SCALE: NOTED SHEET C-2

File: C-2.dwg Path: G:\wag-5\DEMO-PACKAGE\ Layout Name: D Size Date: 05/25/00 - 2:46 P.M.

REVISIONS		
REV.	DESCRIPTION	EFFECTIVE DATE:

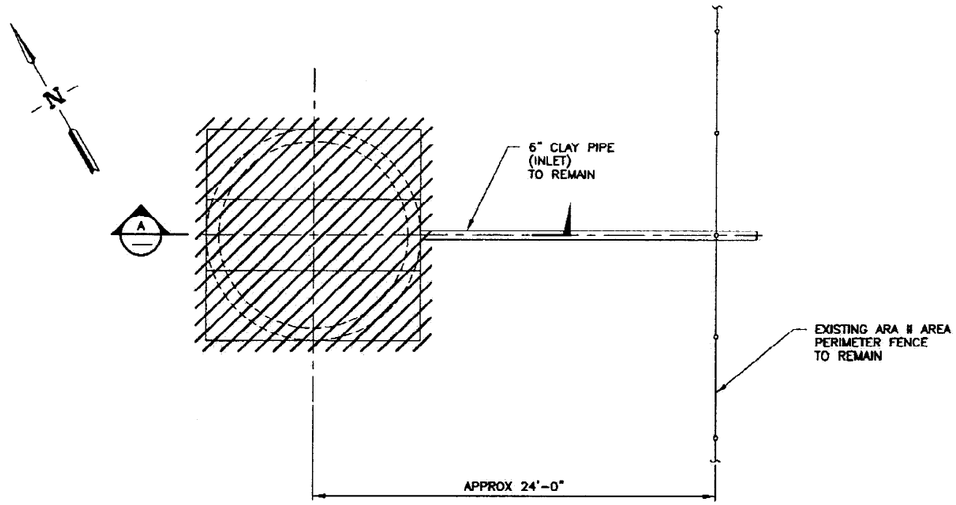

ARA-08 DEMOLITION PLAN

SCALE: 1/4"=1'-0"

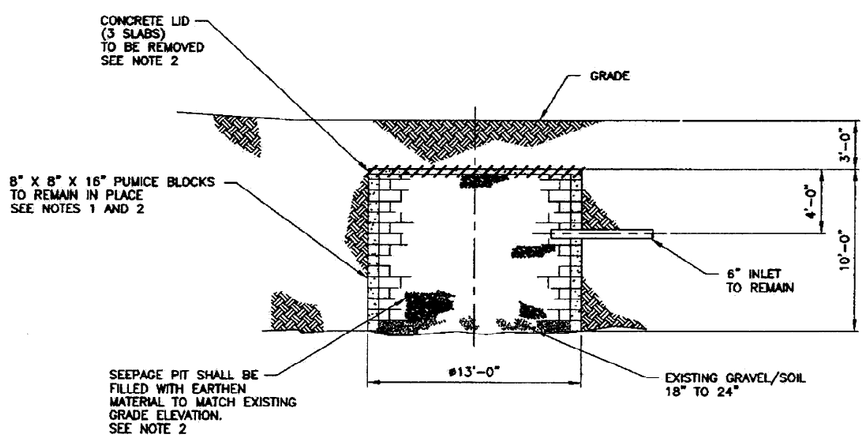

SECTION A

SCALE: 1/4"=1'-0"

NOTES

1. PUMICE BLOCKS LAID ON SIDE. TOP TWO COURSES SET IN MORTAR. ALL OTHER COURSES CONTAIN OPEN JOINTS.
2. EXCAVATE AND REMOVE CONCRETE LID. REMAINING PIT TO BE BACK FILLED USING EARTHEN MATERIAL TO MATCH EXISTING GRADE ELEVATION.

KEY PLAN

REVISION: 0
ORIGINAL SIGNED BY: KURT D. FRITZ
DATE ORIGINAL SIGNED: 5/30/2000
SEAL NUMBER: 9404
ORIGINAL STORED AT: EROB DOCUMENT CONTROL

PROFESSIONAL ENGINEER REGISTERED 9404 STATE OF IDAHO KURT D. FRITZ

FOR DRAWING INDEX SEE DRAWING NO. 513820	SUBCONTRACT NO.	INEEL
SCALE: 1/4" = 1'-0"	REQUESTER: F. WEBBER DESIGN: D. SHANKLIN DRAWN: J.A. LAWRENCE PROJECT NO. 020991 SPEC CODE	WASTE AREA GROUP 5 REMEDIAL DESIGN/REMEDIAL ACTION PHASE I
DESIGN PHASE: AFC	FOR REVIEW/APPROVAL SIGNATURES SEE DAR NO. 45926	ARA-08 SEEPAGE PIT DEMOLITION PLAN & SECTION
QUALITY LEVEL: 3	EFFECTIVE DATE: 5/30/2000	SIZE D; CAGE CODE; INDEX CODE NUMBER: ARA I TYPE 01 DISC 070 0300 50 090; DWG-513824; REV; SCALE: 1/4"=1'-0"; SHEET C-3

File: C-3.dwg Path: G:\wsg-5\DEMO-PACKAGE\ID: RDH5 Layout Name: D Size Date: 05/25/00 - 12:26 P.M.

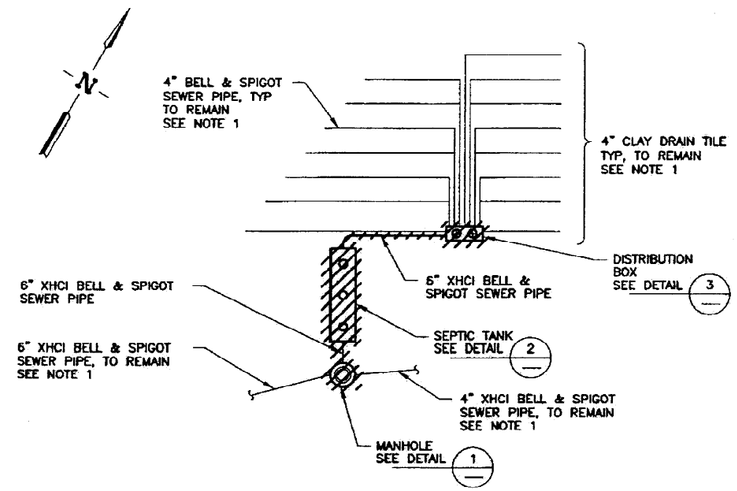

ARA-13 DEMOLITION PLAN

SCALE: 1/8"=1'-0"

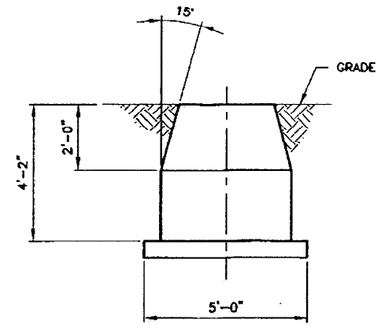

MANHOLE DETAIL 1

SCALE: 1/2"=1'-0"
SEE NOTE 2

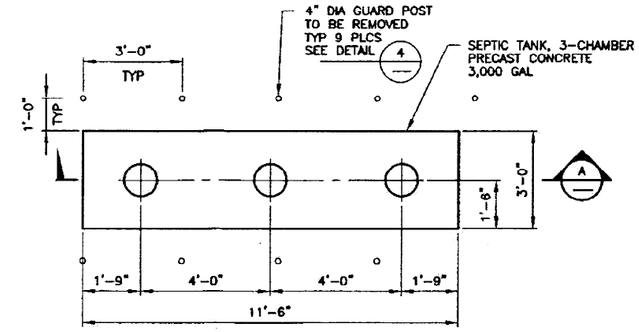

SEPTIC TANK DETAIL 2

SCALE: 1/4"=1'-0"

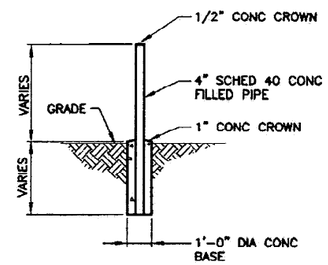

GUARD POST DETAIL 4

NTS

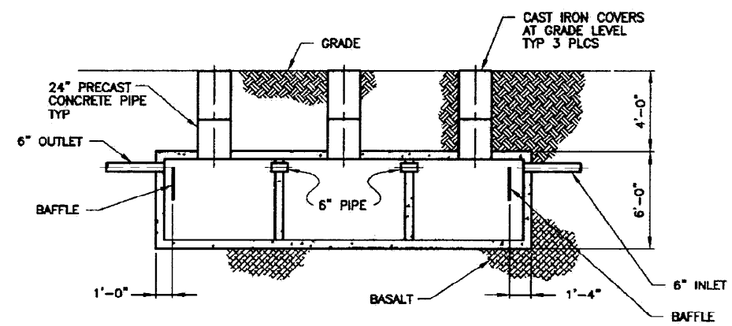

SECTION A

SCALE: 1/4"=1'-0"

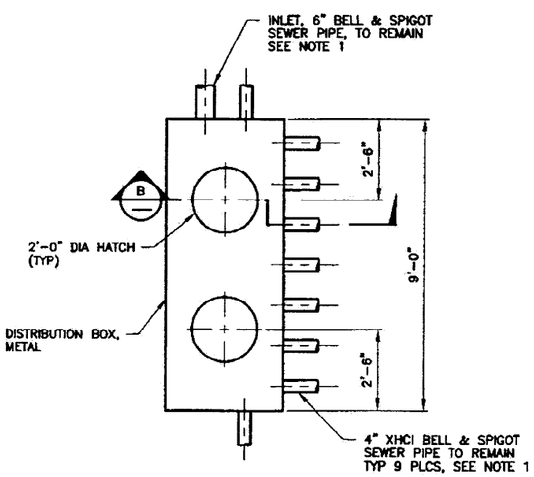

DISTRIBUTION BOX DETAIL 3

SCALE: 1/2"=1'-0"

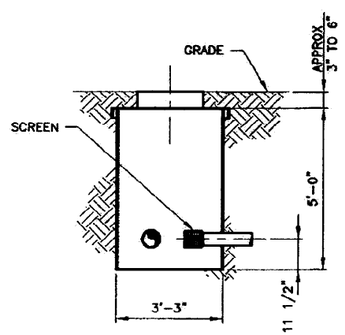

SECTION B

SCALE: 1/2"=1'-0"

NOTES

1. ALL PIPING CONNECTED BETWEEN MANHOLE AND DISTRIBUTION BOX SHALL BE REMOVED. PIPING ABOVE MANHOLE AND BELOW DISTRIBUTION BOX SHALL BE REMOVED BACK ONLY AS FAR AS NECESSARY (APPROX 2'-4') TO ALLOW FOR REMOVAL OF MANHOLE AND DISTRIBUTION BOX. PIPING TO REMAIN SHALL BE CAPPED.
2. INSULATION MAY BE PRESENT AT ALL MANHOLE INLET AND OUTLET PIPES.

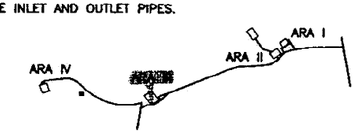

KEY PLAN

REVISIONS

REV	DESCRIPTION	EFFECTIVE DATE:

REVISION: 0
ORIGINAL SIGNED BY: KURT D. FRITZ
DATE ORIGINAL SIGNED: 5/30/2000
SEAL NUMBER: 9404
ORIGINAL STORED AT: EROB DOCUMENT CONTROL

PROFESSIONAL ENGINEER REGISTERED 9404 STATE OF IDAHO KURT D. FRITZ

FOR DRAWING INDEX SEE DRAWING NO	513820
SCALE: 1/4" = 1'-0"	
SCALE: 1/2" = 1'-0"	
DESIGN PHASE:	AFC
QUALITY LEVEL:	3
SUBCONTRACT NO.	
REQUESTER:	F. WEBBER
DESIGN:	D. SHANKLIN
DRAWN:	J.A. LAWRENCE
PROJECT NO.	020991
SPEC CODE	
FOR REVIEW/APPROVAL SIGNATURES SEE DAR NO.	45826
EFFECTIVE DATE:	5/30/2000

INEEL

WASTE AREA GROUP 5
REMEDIAL DESIGN/REMEDIAL ACTION
PHASE I

ARA-13 SEWER SYSTEM DEMOLITION PLAN, SECTIONS & DETAILS

SIZE	CAGE CODE	INDEX CODE NUMBER				DWG-	REV
		ARA	TYPE	DL	DRC		
D		063	0300	50	090	513825	

SCALE: NOTED
SHEET C-4

File: C-4.dwg
Path: G:\wag-5\DEMO-PACKAGE\
ID: RDH5 Layout Name: D Size
Date: 05/25/00 - 2:18 P.M.

REVISIONS		
REV	DESCRIPTION	EFFECTIVE DATE:

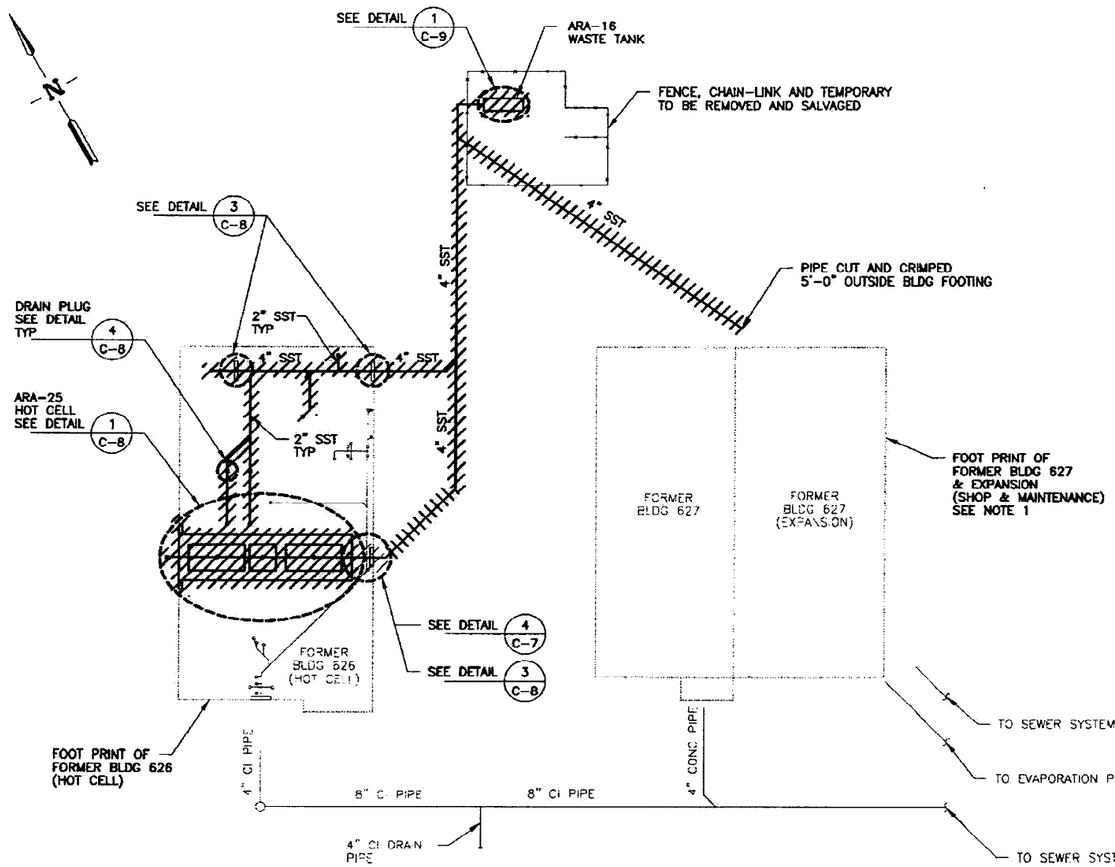

DEMOLITION PLAN

SCALE: 1"=20.0'

ESTIMATED QUANTITIES

ITEM	SIZE	LENGTH (FT)
627 DRAIN-LINE	4" DIA	105
626 HOT CELL DRAIN-LINE	4" DIA	223
626 SERVICE AREA DRAIN-LINES	2" DIA 4" DIA	127 47
TOTALS		502

NOTES

1. ALL BLDG 627 INTERIOR HOT DRAIN-LINES HAVE BEEN REMOVED.
2. ESTIMATED QUANTITIES PERTAIN TO WORK THIS SHEET ONLY.

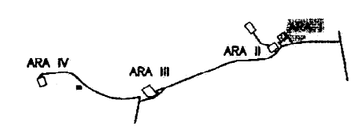

KEY PLAN

REVISION: 0
ORIGINAL SIGNED BY: KURT D. FRITZ
DATE ORIGINAL SIGNED: 5/30/2000
SEAL NUMBER: 9404
ORIGINAL STORED AT: EROB DOCUMENT CONTROL

PROFESSIONAL ENGINEER REGISTERED 9404 STATE OF IDAHO KURT D. FRITZ

FOR DRAWING INDEX SEE DRAWING NO. 513820	SUBCONTRACT NO.
SCALE: 1" = 20.0'	REQUESTER: F. WEBBER
	DESIGN: J. HARRIS
	DRAWN: ROB HERGESHEIMER
	PROJECT NO. 020991
	SPEC CODE
DESIGN PHASE: AFC	FOR REVIEW/APPROVAL SIGNATURES SEE DAR NO. 45926
QUALITY LEVEL: 3	EFFECTIVE DATE: 5/30/2000

INEEL — Idaho National Engineering & Environmental Laboratory — BECHTEL BWXT IDAHO, LLC

WASTE AREA GROUP 5
REMEDIAL DESIGN/REMEDIAL ACTION
PHASE I

ARA-16 WASTE TANK AND DRAIN LINE DEMOLITION PLAN

SIZE	CAGE CODE	BACK CODE NUMBER AREA	TYPE	D	ORG	DWG-513826	REV
D		068	0300	50	090		

SCALE: 1"=20.0' SHEET C-5

File: C-5.dwg ID: RDHS Layout Name: D Size
Path: G:\wag-5\DEMO-PACKAGE\ Date: 05/25/00 - 12:31 P.M.

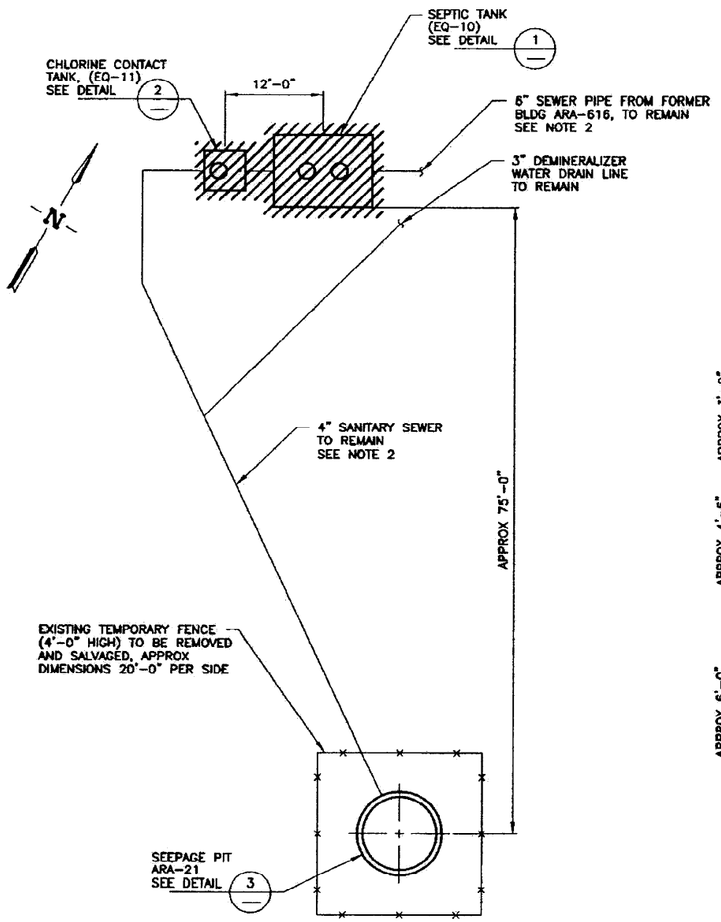

ARA-21 DEMOLITION PLAN

SCALE: 1/8"=1'-0"

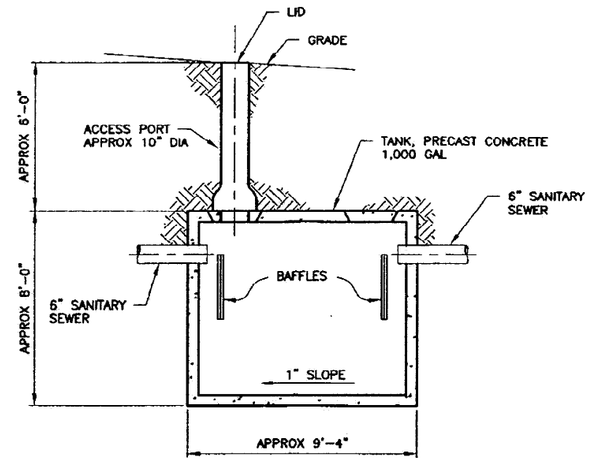

SEPTIC TANK (EQ-10) DETAIL 1

SCALE: 3/8"=1'-0"

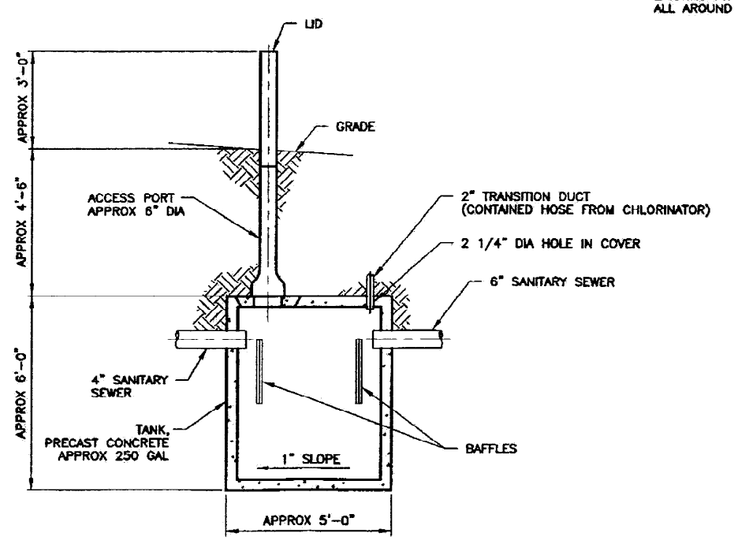

CHLORINE CONTACT TANK (EQ-11) DETAIL 2

NTS

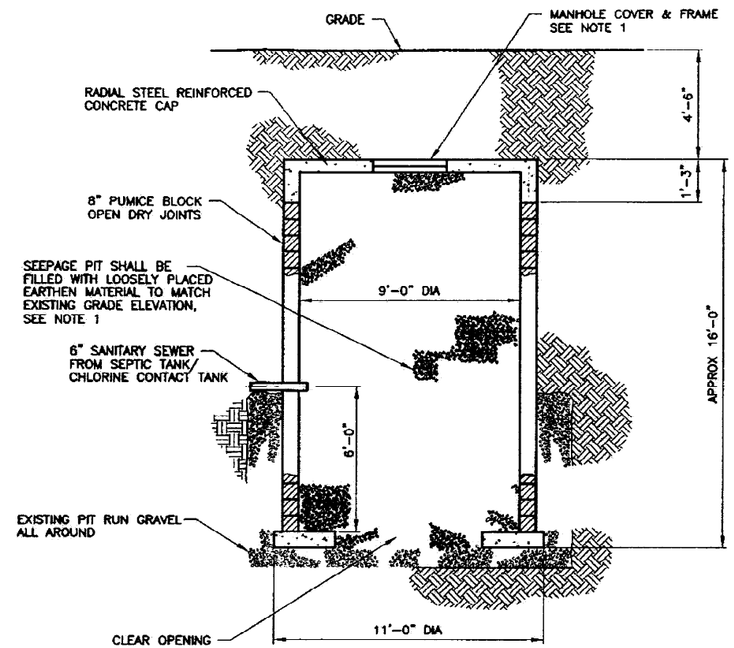

SEEPAGE PIT ARA-21 DETAIL 3

SCALE: 3/8"=1'-0"

NOTES

1. REMOVE SEEPAGE PIT LID AND FILL PIT W/EARTHEN MATERIAL. REPLACE SEEPAGE PIT LID AND BACK FILL USING EARTHEN MATERIAL TO MATCH EXISTING GRADE ELEVATION.
2. ALL PIPING CONNECTED TO REMOVED ITEMS, (CHLORINE CONTACT TANK AND SEPTIC TANK) SHALL BE REMOVED BACK FAR ENOUGH TO ALLOW FOR ITEM REMOVAL.

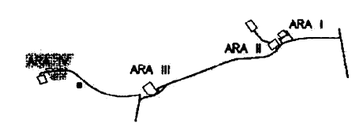

KEY PLAN

REVISION: 0
ORIGINAL SIGNED BY: KURT D. FRITZ
DATE ORIGINAL SIGNED: 5/30/2000
SEAL NUMBER: 9404
ORIGINAL STORED AT: EROB DOCUMENT CONTROL

PROFESSIONAL ENGINEER REGISTERED 9404 STATE OF IDAHO KURT D. FRITZ

FOR DRAWING INDEX SEE DRAWING NO. 513820	SUBCONTRACT NO.
SCALE 1/8" = 1'-0"	REQUISITER: F. WEBBER
SCALE: 3/8" = 1'-0"	DESIGN: D. SHANKLIN
	DRAWN: J.A. LAWRENCE
	PROJECT NO. 020991
	SPEC CODE
	FOR REVIEW/APPROVAL SIGNATURES SEE DWG NO. 45926
DESIGN PHASE: AFC	EFFECTIVE DATE: 5/30/2000
QUALITY LEVEL: 3	

INEEL — Idaho National Engineering & Environmental Laboratory, BECHTEL BWXT IDAHO, LLC

WASTE AREA GROUP 5
REMEDIAL DESIGN/REMEDIAL ACTION
PHASE I

ARA-21 SEPTIC SYSTEM DEMOLITION PLAN AND DETAILS

SIZE	CAGE CODE	INDEX CODE NUMBER: AREA	TYPE	CL	DISC	DWG-	REV
D		066	03000	50	090	513827	

SCALE NOTED — SHEET C-6

File: C-6.dwg Path: G:\wag-5\DEMO-PACKAGE\ Layout Name: D Size Date: 05/25/00 — 12:31 P.M. ID: RDH5

REVISIONS		
REV	DESCRIPTION	EFFECTIVE DATE:

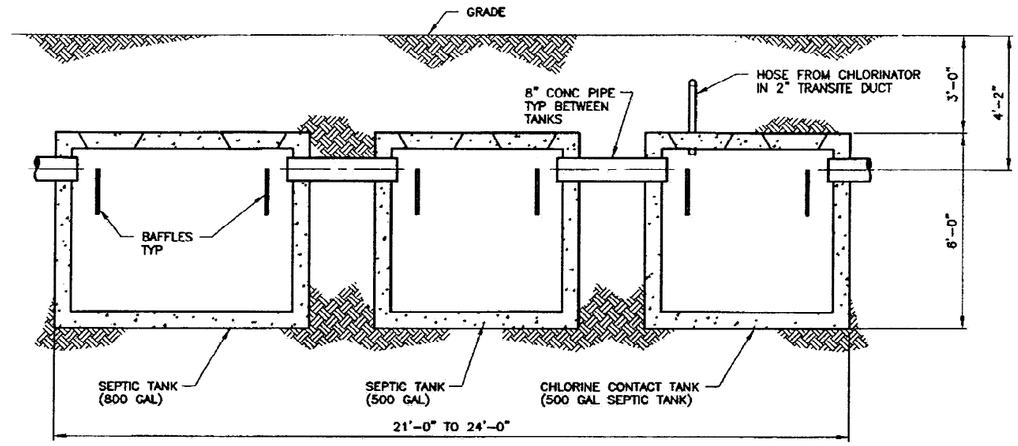

DETAIL (1 / C-1)
SCALE: 1/2"=1'-0"

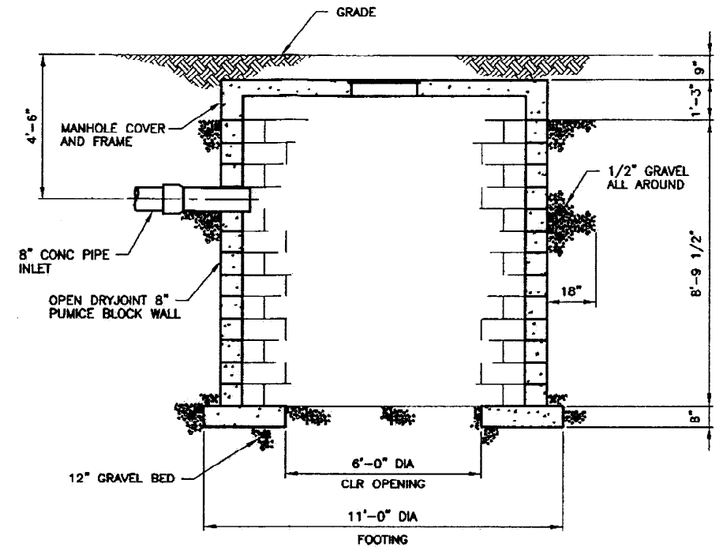

SEEPAGE PIT DETAIL (2 / C-1)
SCALE: 1/2"=1'-0"

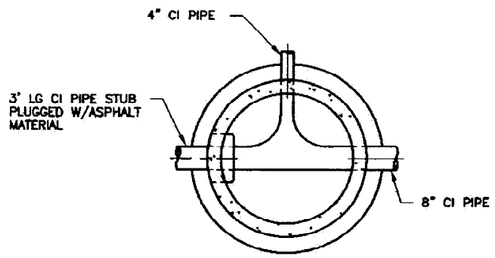

MANHOLE #1 SECTION (A / —)
SCALE: 1/2"=1'-0"

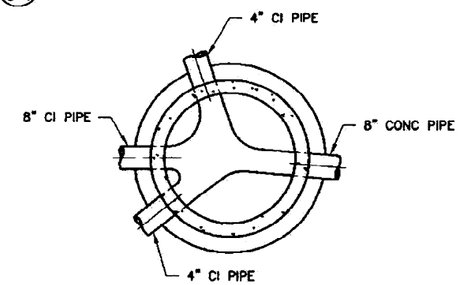

MANHOLE #2 SECTION (B / —)
SCALE: 1/2"=1'-0"

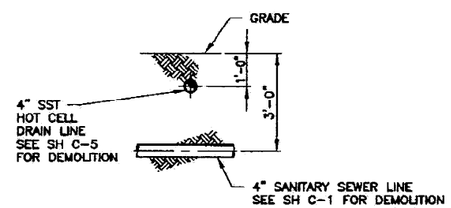

DETAIL (4 / C-1) (4 / C-5)
SCALE: 1/2"=1'-0"

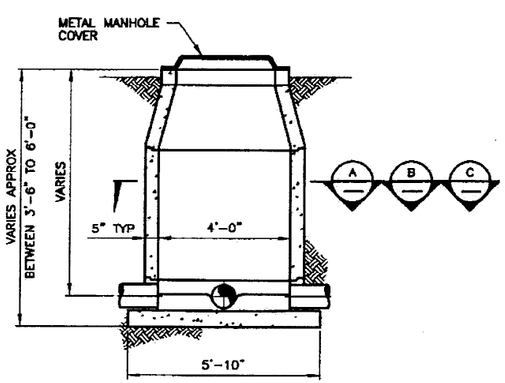

TYPICAL MANHOLE DETAIL (3 / C-1)
SCALE: 1/2"=1'-0"

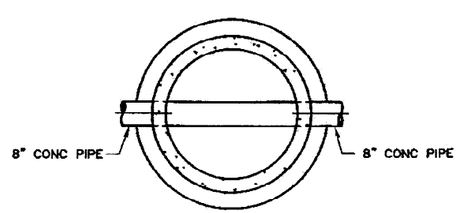

MANHOLE #3 SECTION (C / —)
SCALE: 1/2"=1'-0"

REVISION: 0
ORIGINAL SIGNED BY: KURT D. FRITZ
DATE ORIGINAL SIGNED: 5/30/2000
SEAL NUMBER: 9404
ORIGINAL STORED AT: EROB DOCUMENT CONTROL

PROFESSIONAL ENGINEER REGISTERED 9404 STATE OF IDAHO KURT D. FRITZ

FOR DRAWING INDEX SEE DRAWING NO. 513820	SUBCONTRACT NO.	INEEL
SCALE: 1/2" = 1'-0"	REQUESTER: F. WEBBER	WASTE AREA GROUP 5 REMEDIAL DESIGN/REMEDIAL ACTION PHASE I
	DESIGN: J. HARRIS	
	DRAWN: ROB HERGESHEIMER	ARA-02 DEMOLITION SECTIONS AND DETAILS
	PROJECT NO. 020991	
	SPEC CODE	
DESIGN PHASE: AFC	FOR REVIEW/APPROVAL SIGNATURES SEE DAR NO. 45926	SIZE D / CAGE CODE / INDEX CODE NUMBER AREA 068 TYPE 0300 Q. 50 ORG 090 / DWG-513828 / REV
QUALITY LEVEL: 3	EFFECTIVE DATE: 5/30/2000	SCALE: 1/2"=1'-0" / SHEET C-7

File: C-7.dwg Path: G:\wag-5\DEMO-PACKAGE ID: RDH5 Layout Name: D Size Date: 05/03/00 - 09:55 A.M.

REVISIONS		
REV	DESCRIPTION	EFFECTIVE DATE:

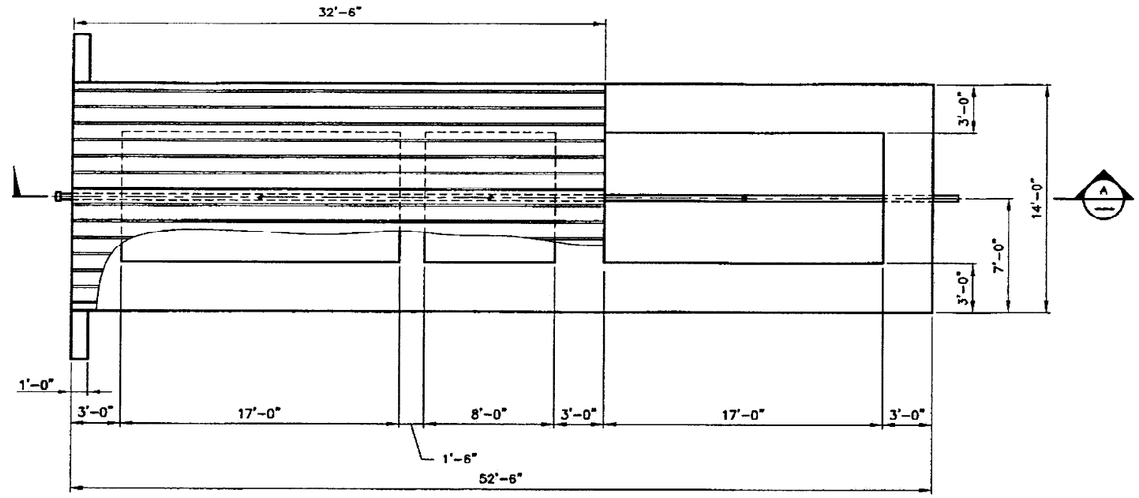

ARA-25 HOT CELLS DETAIL (1 / C-5)
SCALE: 1/4"=1'-0"

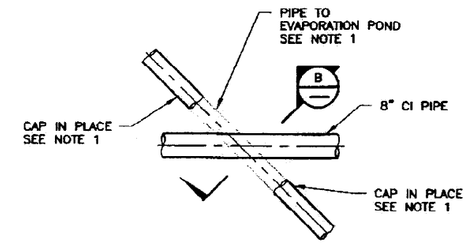

TYP PIPE CROSSING DETAIL (2 / C-1)
SCALE: 1/4"=1'-0"

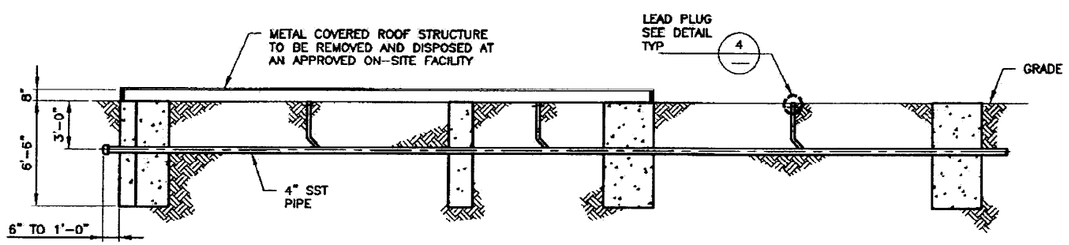

SECTION (A / —)
1/4"=1'-0"

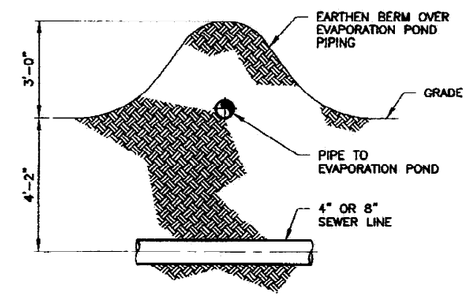

SECTION (B / —)
SCALE: 1/2"=1'-0"

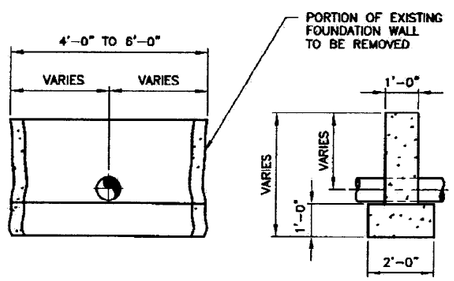

TYP FOUNDATION WALL PENETRATION DETAIL (3 / C-1) (3 / C-5)
SCALE: 1/2"=1'-0"

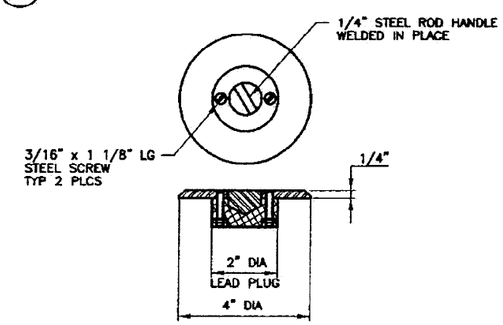

TYP LEAD DRAIN PLUG DETAIL (4 / —) (4 / C-5)
(APPROX 11 PLCS)
SCALE: 1"=6"

NOTES

1. REMOVE A PORTION OF PIPE TO EVAPORATION POND AS REQUIRED TO ALLOW FOR REMOVAL OF INDICATED PIPING. CAP REMAINING EVAPORATION POND PIPE ENDS.

REVISION: 0
ORIGINAL SIGNED BY: KURT D. FRITZ
DATE ORIGINAL SIGNED: 5/30/2000
SEAL NUMBER: 9404
ORIGINAL STORED AT: EROB DOCUMENT CONTROL

PROFESSIONAL ENGINEER REGISTERED 9404 STATE OF IDAHO KURT D. FRITZ

FOR DRAWING INDEX SEE DRAWING NO. 513820	SUBCONTRACT NO.	INEEL	
SCALE: 1/4" = 1'-0" / SCALE: 1/2" = 1'-0"	REQUESTER: F. WEBBER	WASTE AREA GROUP 5 REMEDIAL DESIGN/REMEDIAL ACTION PHASE I	
	DESIGN: J. HARRIS		
	DRAWN: ROB HERGESHEIMER		
	PROJECT NO. 020991	ARA-16/ARA-25 DEMOLITION SECTIONS AND DETAILS	
	SPEC CODE		
	FOR REVIEW/APPROVAL SIGNATURES SEE DWG NO. 45926	SIZE D / CADD CODE / NAVY CODE NUMBER AREA 068 TYPE 0300 G 50 DWG 090	DWG-513829 REV
DESIGN PHASE: AFC	EFFECTIVE DATE: 5/30/2000	SCALE: NOTED	SHEET C-8
QUALITY LEVEL: 3			

File: C-5.dwg ID: RDH5 Layout Name: D Size
Path: G:\eng-3\DEMO-PACKAGE\ Date: 05/25/00 - 12:40 P.M.

REVISIONS		
REV	DESCRIPTION	EFFECTIVE DATE:

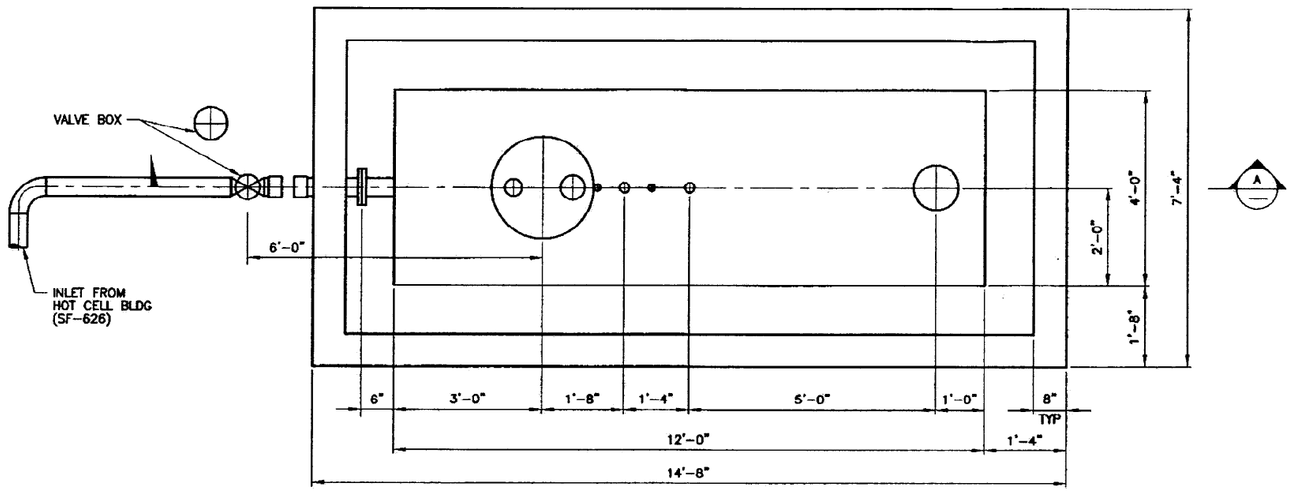

WASTE TANK DETAIL (1 / C-5)

SCALE: 3/4"=1'-0"

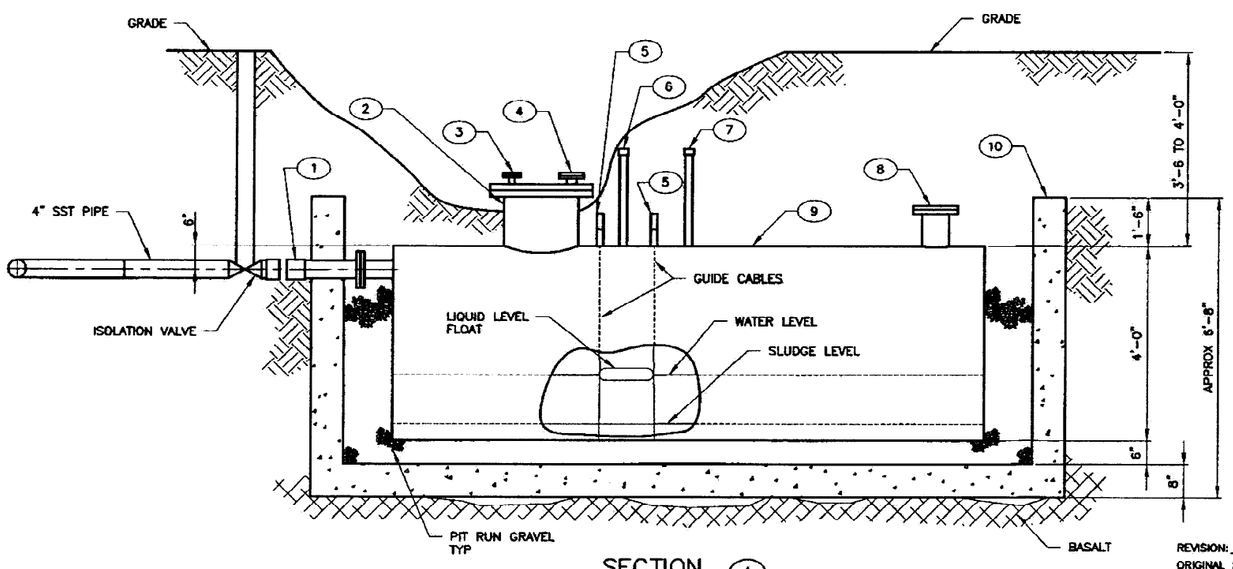

SECTION (A / —)

SCALE: 3/4"=1'-0"

LEGEND

1. 4" DIAMETER INLET PIPE, 304 SST.
2. 18" DIAMETER MANHOLE. EXTENDS 12" ABOVE TANK. FLANGED CLOSED. (EXPOSED)
3. 1" DIAMETER PIPE (FORMER HIGH LEVEL ALARM ELECTRODE). CUT AND BLIND FLANGE 18" ABOVE TANK
4. 2" DIAMETER SST PIPE (FORMER PUMP RETURN LINE). CUT AND BLIND FLANGED 18" ABOVE TANK.
5. 1 1/4 X 4" PIPE NIPPLE WITH EXTENSION SUPPORT GUIDE CABLES FOR EXISTING LIQUID LEVEL FLOAT.
6. 1 1/2" PIPE COUPLING (FORMER TANK LEVEL INDICATOR SUPPORT) WITH EXTENSION. CUT AND CAPPED APPROXIMATELY 24" ABOVE TANK.
7. 1 1/2" PIPE COUPLING (FORMER TANK VENT). CUT AND CAPPED APPROXIMATELY 24" ABOVE TANK.
8. 6" DIAMETER FLANGED SUBMERSIBLE PUMP ACCESS (REMOVED). EXTENDS 8" ABOVE TANK. BLIND FLANGED CLOSED, APPROXIMATELY 3' BELOW GRADE.
9. 1000 GALLON 304 SST UNDERGROUND TANK, SINGLE WALL, FLAT ENDS. MANUFACTURED BY UNITED STATES STEEL (1B-8L).
10. CONCRETE FOUNDATION.

NOTES

1. DIMENSIONS AND LAYOUT SHOWN ARE BASED ON A REVIEW OF THE AS-BUILT DRAWINGS, ACTUAL DIMENSIONS MAY VARY SLIGHTLY.

REVISION: 0
ORIGINAL SIGNED BY: KURT D. FRITZ
DATE ORIGINAL SIGNED: 5/30/2000
SEAL NUMBER: 9404
ORIGINAL STORED AT: EROB DOCUMENT CONTROL

PROFESSIONAL ENGINEER REGISTERED 9404 STATE OF IDAHO KURT D. FRITZ

FOR DRAWING INDEX SEE DRAWING NO. 513820	SUBCONTRACT NO.	INEEL
SCALE: 3/4" = 1'-0"	REQUESTER: F. WEBBER	WASTE AREA GROUP 5 REMEDIAL DESIGN/REMEDIAL ACTION PHASE I
	DESIGN: D. SHANKLIN	
	DRAWN: ROB HERGESHEIMER	
	PROJECT NO. 020991	ARA-16 DEMOLITION SECTION AND DETAIL
	SPEC CODE	
DESIGN PHASE: AFC	FOR REVIEW/APPROVAL SIGNATURES SEE DAR NO. 45926	SIZE D; CAGE CODE; PROJ CODE NUMBER AREA 068, TYPE 0300, G 50, ORG 090; DWG-513830; REV
QUALITY LEVEL: 3	EFFECTIVE DATE: 5/30/2000	SCALE: 3/4"=1'-0"; SHEET C-9

File: C-9.dwg
Path: C:\wgs-5\DEMO-PACKAGE\
ID: RDH3
Layout Name: D Size
Date: 05/25/00 - 12:41 P.M.

REVISIONS		
REV	DESCRIPTION	EFFECTIVE DATE:

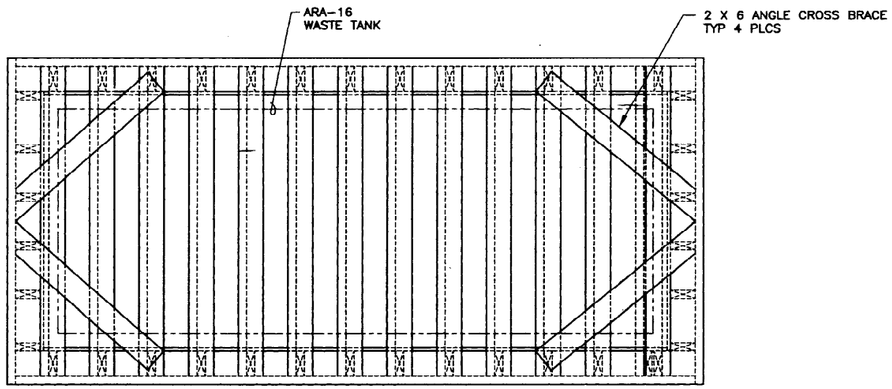

PLAN

SCALE: 3/4"=1'-0"

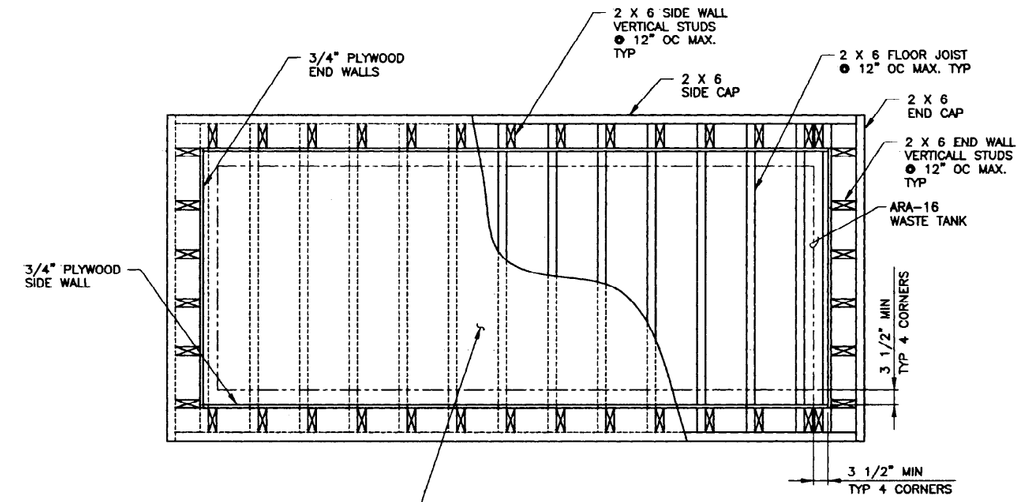

SECTION (A)

SCALE: 3/4"=1'-0"

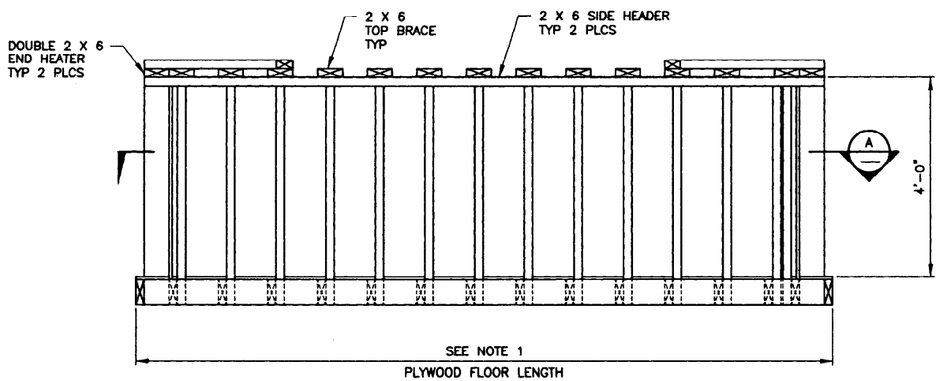

SIDE ELEVATION

SCALE: 3/4"=1'-0"

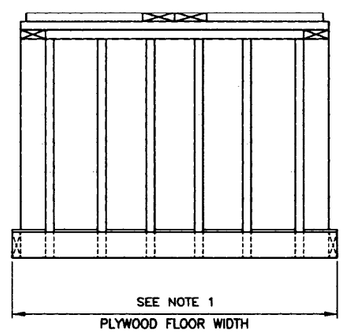

END ELEVATION

SCALE: 3/4"=1'-0"

NOTES

1. OVERALL FORM LENGTH AND WIDTH WILL BE DETERMINED/DRIVEN BY THE ACTUAL SIZE OF THE TANK AFTER IT HAS BEEN DOWN SIZED.
2. MATERIALS FOR FORM SHALL BE AS STATED:
   2 X 6 NO. 2 OR BETTER DOUGLAS FIR, 3/4" PLYWOOD.
3. ALL 2 X 6 JOINTS IN FORM FABRICATION SHALL HAVE A MINIMUM OF (6)-16 PENNY NAILS OR (4)-1/4" X 4" LG LAG SCREWS. PLYWOOD TO 2 X 6 CONNECTIONS SHALL BE SPACED @ 8" OC MAX. USING 8 PENNY NAILS OR #8 SCREWS.
4. SEE SHEET S-2 FOR REINFORCEMENT INFORMATION.

REGISTERED PROFESSIONAL ENGINEER 4003 6/14/01 STATE OF IDAHO SCOTT ALAN JENSEN

FOR DRAWING INDEX SEE DRAWING NO. NA	SUBCONTRACT NO.	INEEL BECHTEL BWXT IDAHO, LLC
SCALE: 3/4" = 1'-0"	REQUESTER: SCOTT JENSEN DESIGN: SCOTT JENSEN DRAWN: ROB HERGESHEIMER PROJECT NO. 020911 SPEC CODE	WASTE AREA GROUP 5 REMEDIAL DESIGN/REMEDIAL ACTION PHASE-1 ARA-16 WASTE TANK FORM FABRICATION PLAN AND SECTION
DESIGN PHASE: AFC	FOR REVIEW/APPROVAL SIGNATURES SEE DAR NO. 83474	SIZE D · CAGE CODE · INDEX CODE NUMBER: AREA 068, TYPE 9999, Q 60, DWG 090 · DWG-517760 · REV
SAFETY CATEGORY: SLC	EFFECTIVE DATE: 6/14/01	SCALE: 3/4"=1'-0" · SHEET S-1

File: 517760.dwg
Path: G:\wag-5
ID: RDH5
Layout Name: D Size
Date: 06/14/01 - 12:34 P.M.

REVISIONS		
REV	DESCRIPTION	EFFECTIVE DATE

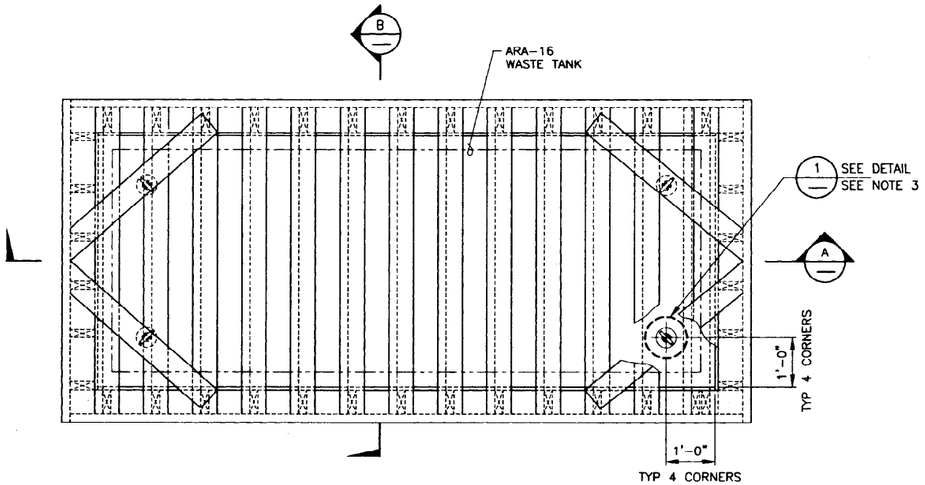

FORM REINFORCEMENT PLAN

SCALE: 3/4"=1'-0"

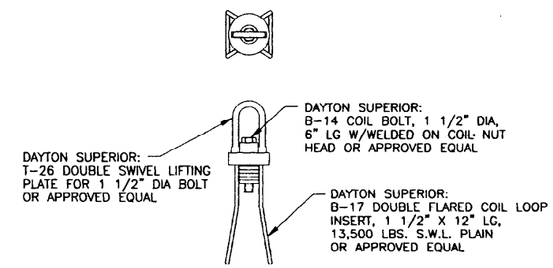

DETAIL 1

SCALE: 1 1/2"=1'-0"

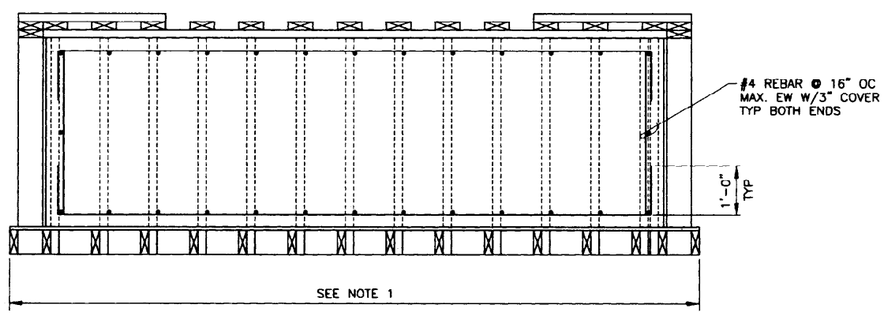

SECTION A

SCALE: 3/4"=1'-0"

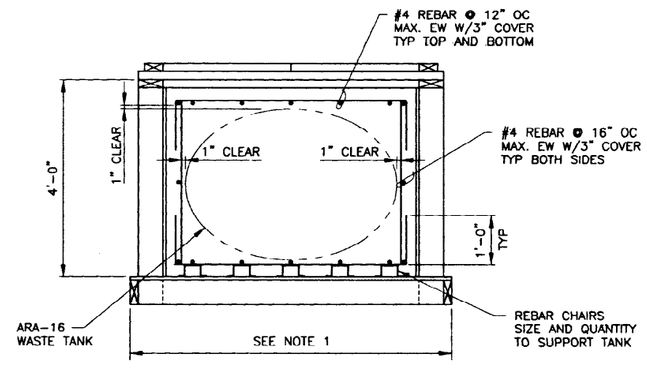

SECTION B

SCALE: 3/4"=1'-0"

NOTES

1. OVER ALL FORM LENGTH AND WIDTH WILL BE DETERMINED/DRIVEN BY THE ACTUAL SIZE OF THE TANK AFTER IT HAS BEEN DOWN SIZED.
2. SEE SHEET S-1 FOR FORM FABRICATION MATERIALS.
3. LIFTING COMPONENTS SHALL BE INSTALLED AS SHOWN AT ALL 4 CORNERS PER MANUFACTURERS INSTRUCTIONS. ENSURE WHEN INSTALLING DOUBLE FLARED COIL LOOPS TO ROUTE A REBAR MEMBER THROUGH BOTH LOOPS.
4. SEE SPECIFICATION FOR CONCRETE GROUT PLACEMENT.

REGISTERED PROFESSIONAL ENGINEER
4003
6/19/01
STATE OF IDAHO
SCOTT ALAN JENSEN

FOR DRAWING INDEX SEE DRAWING NO. NA	SUBCONTRACT NO.	INEEL (Idaho National Engineering & Environmental Laboratory) BECHTEL BWXT IDAHO, LLC
SCALE: 3/4" = 1'-0"	REQUESTER: SCOTT JENSEN	WASTE AREA GROUP 5
SCALE: 1 1/2" = 1'-0"	DESIGN: SCOTT JENSEN	REMEDIAL DESIGN/REMEDIAL ACTION
	DRAWN: ROB HERGESHEIMER	PHASE-1
	PROJECT NO. 020911	ARA-16 WASTE TANK
	SPEC CODE	FORM REINFORCEMENT PLAN, SECTIONS AND DETAIL
DESIGN PHASE: AFC	FOR REVIEW/APPROVAL SIGNATURES SEE DAR NO. 83474	SIZE D · CAGE CODE · INDEX CODE NUMBER AREA 068 TYPE 9999 SQ 60 DISC 090 · DWG-517761 · REV
SAFETY CATEGORY: SLC	EFFECTIVE DATE: 6/14/01	SCALE: 3/4"=1'-0" · SHEET S-2

File: 517761.dwg
Path: G:\wag-5
ID: RDH5
Layout Name: D Size
Date: 06/14/01 - 12:45 P.M.