REVISIONS		
REV	DESCRIPTION	EFFECTIVE DATE:
0	TITLE I DESIGN	9 JULY 2001

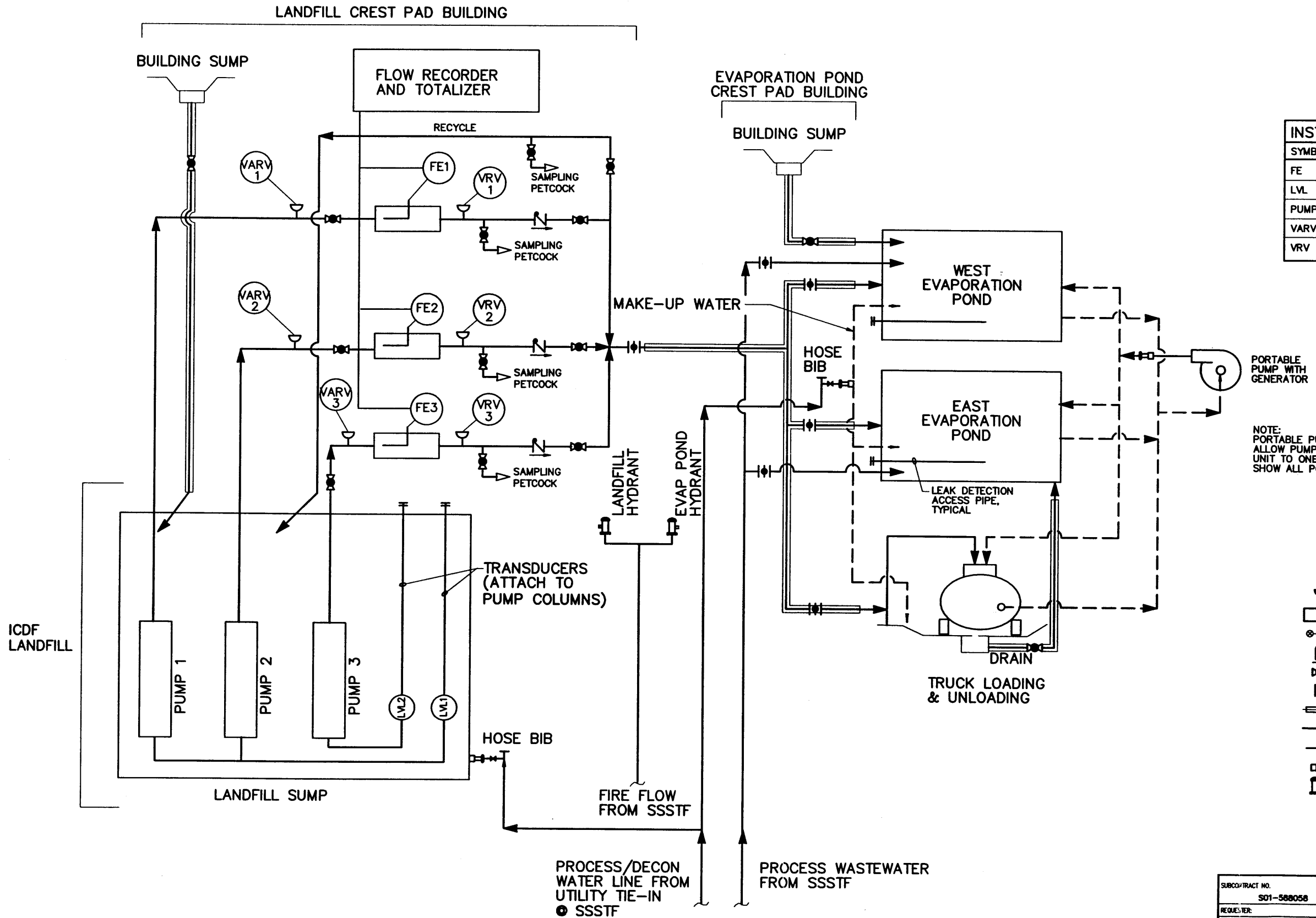

NOTE:
PORTABLE PUMP AND HOSE WILL ALLOW PUMPING FROM ONE STORAGE UNIT TO ONE OTHER. DASHED LINES SHOW ALL POSSIBLE CONFIGURATIONS.

INSTRUMENT LEGEND	
SYMBOL	DEVICE
FE	FLOW METER
LVL	LEVEL SENSOR/TRANSDUCER
PUMP	SUBMERSIBLE SUMP PUMP
VARV	VACUUM/AIR RELIEF VALVE
VRV	VACUUM RELIEF VALVE

LEGEND

- VACUUM/AIR RELIEF VALVE
- FLOW METER
- SAMPLING PETCOCK
- CHECK VALVE
- BALL VALVE
- BUTTERFLY VALVE PIPE
- DOUBLE CONTAINMENT PIPE
- HOSE (POSSIBLE CONFIGURATION)
- BLIND FLANGE
- HOSE FITTING
- HYDRANT

PRELIMINARY NOT FOR CONSTRUCTION

INEEL (Idaho National Engineering & Environmental Laboratory) BECHTEL BWXT IDAHO, LLC

CH2MHILL

INEEL CERCLA DISPOSAL FACILITY (ICDF)

LEACHATE SYSTEM
P & ID

SUBCONTRACT NO.	S01-568058
REQUESTER:	
DESIGN:	T KRAEMER
DRAWN:	V AHRNKIEL
PROJECT NO.	
SPEC CODE	
FOR REVIEW/APPROVAL SIGNATURES SEE DAR NO.	DAR
EFFECTIVE DATE:	

SIZE	CAGE CODE	INDEX CODE NUMBER (AREA / TYPE / CL / ORG)	DWG-	REV
D		B21 / 9999 / 24	P-201	0

SCALE: NONE CPP SHEET 1 OF 1

REVISIONS		
REV	DESCRIPTION	EFFECTIVE DATE:
0	TITLE I DESIGN	9 JULY 2001

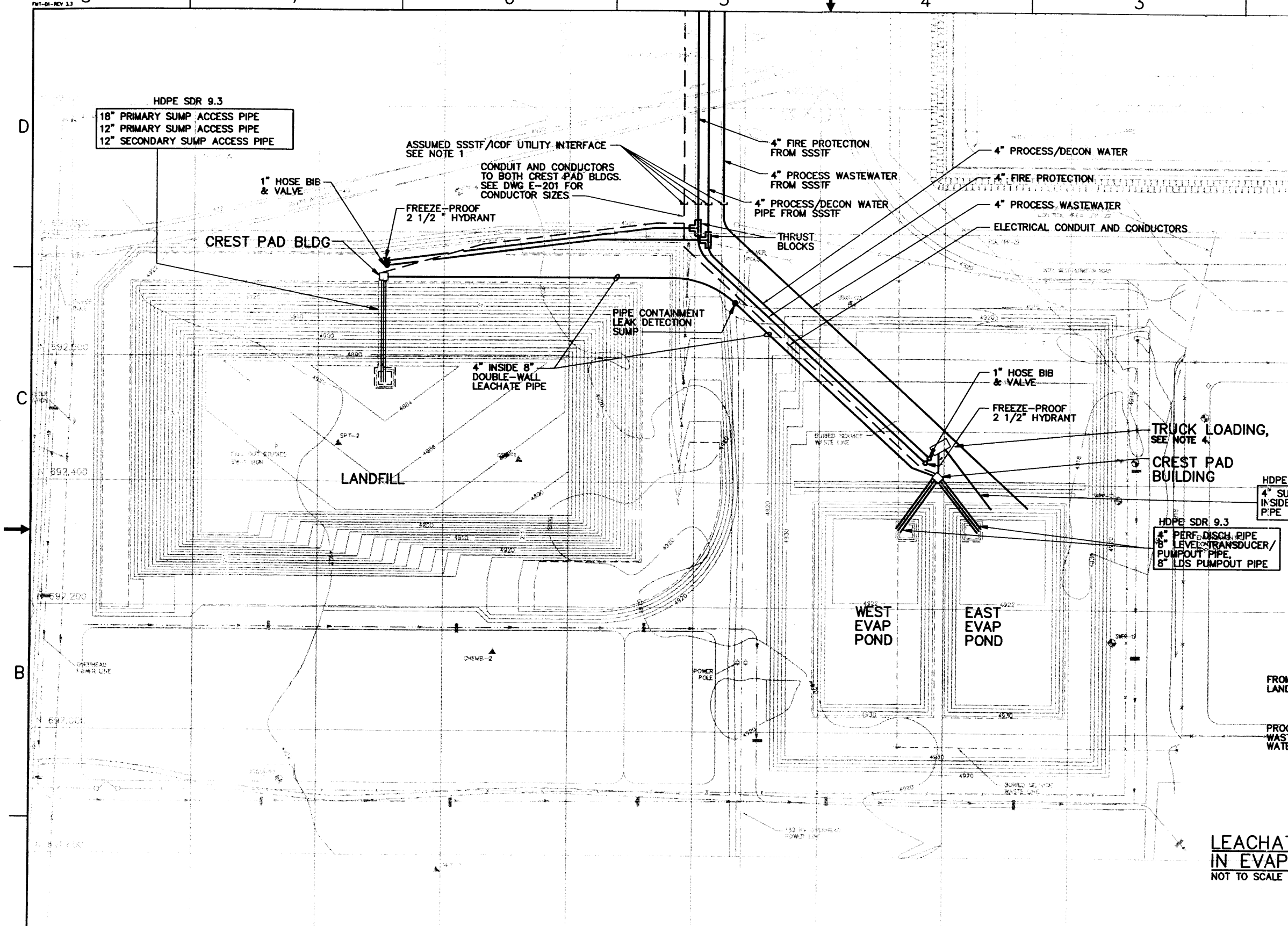

NOTES:

1. LOCATION OF SSSTF/ICDF UTILITY TIE-IN IS APPROXIMATE. VERIFY WITH SSSTF RECORD DRAWINGS PRIOR TO CONSTRUCTION.
2. LOCATION OF UTILITY PIPE/CONDUIT ROUTING IS APPROXIMATE AND TO BE VERIFIED IN FIELD PRIOR TO CONSTRUCTION.
3. ALL BURIED LEACHATE PIPE OUTSIDE OF LANDFILL LINER, EVAP POND LINER, OR STORAGE FACILITIES, IS DOUBLE-WALL, 4" INSIDE 8".
4. TRUCKS AT THE LOADING STATION CAN BE FILLED FROM EITHER THE LANDFILL (VIA VALVING AT THE CREST PAD BUILDING), OR THE EVAPORATION PONDS (VIA PORTABLE PUMP). TRUCKS CAN ALSO DISCHARGE TO THE EVAPORATION PONDS (VIA THE LOADING STATION SUMP). TRUCK LOADING FROM THE EVAPORATION PONDS IS ONLY ANTICIPATED DURING EMERGENCY OPERATIONS TO EMPTY THE PONDS FOR REPAIR.

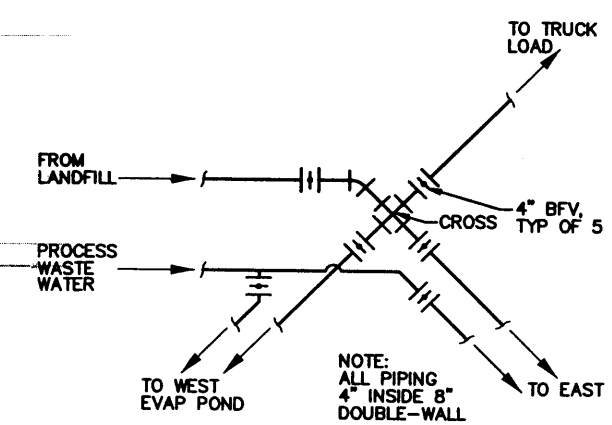

LEACHATE PIPE VALVE ARRANGEMENT IN EVAP-POND CREST BUILDING

NOT TO SCALE

PIPING PLAN / CONDUIT PLAN

PRELIMINARY NOT FOR CONSTRUCTION

INEEL

CH2MHILL

INEEL CERCLA DISPOSAL FACILITY (ICDF)

LEACHATE PIPING PLAN

SUBCONTRACT NO.	S01-568058
REQUESTER:	
DESIGN:	T KRAMER
DRAWN:	V MAXEY-SUHR
PROJECT NO.	
SPEC CODE	
FOR REVIEW/APPROVAL SIGNATURES SEE DAR NO.	DAR
EFFECTIVE DATE:	

SIZE	CAGE CODE	INDEX CODE NUMBER (AREA / TYPE / CL / ORG)	DWG-	REV
D		B21 / 0200 / 50	L-201	0
SCALE: AS SHOWN			CPP SHEET 1 OF 1	

REVISIONS		
REV	DESCRIPTION	EFFECTIVE DATE:
0	TITLE I DESIGN	9 JULY 2001

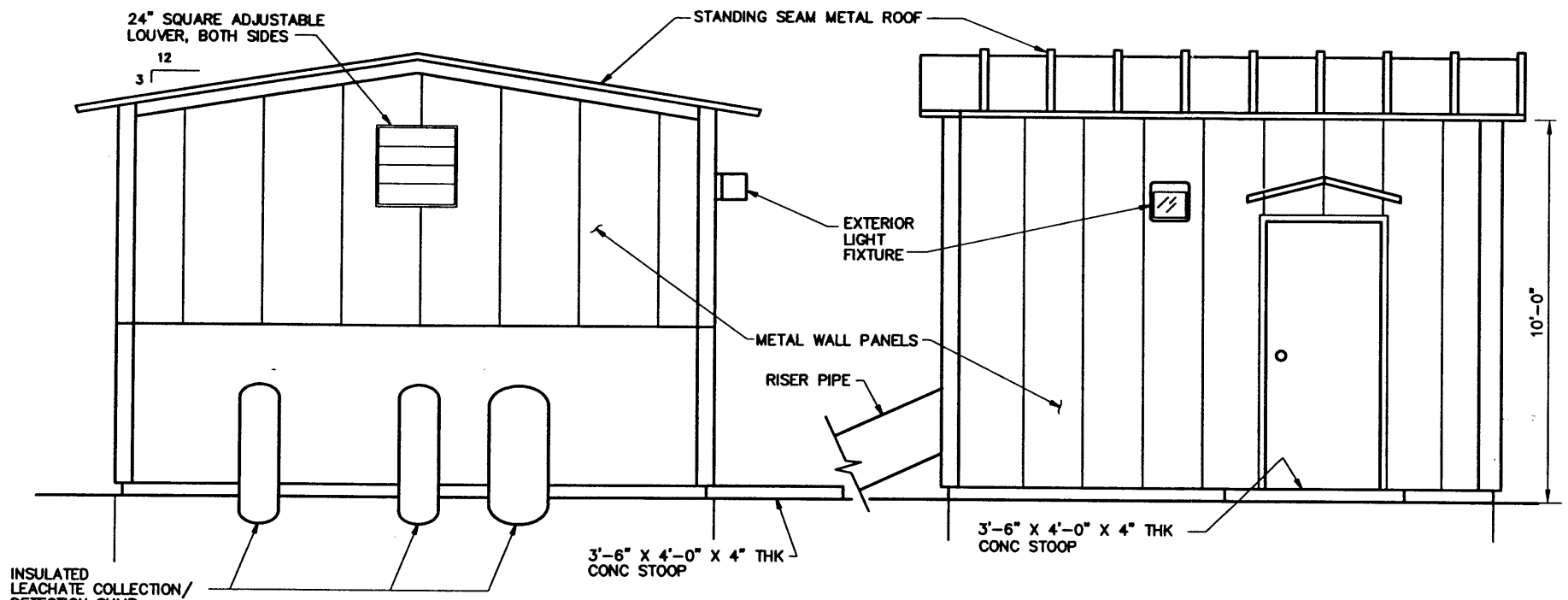

SOUTH ELEVATION
1/2 "=1'

EAST ELEVATION
1/2 "=1'

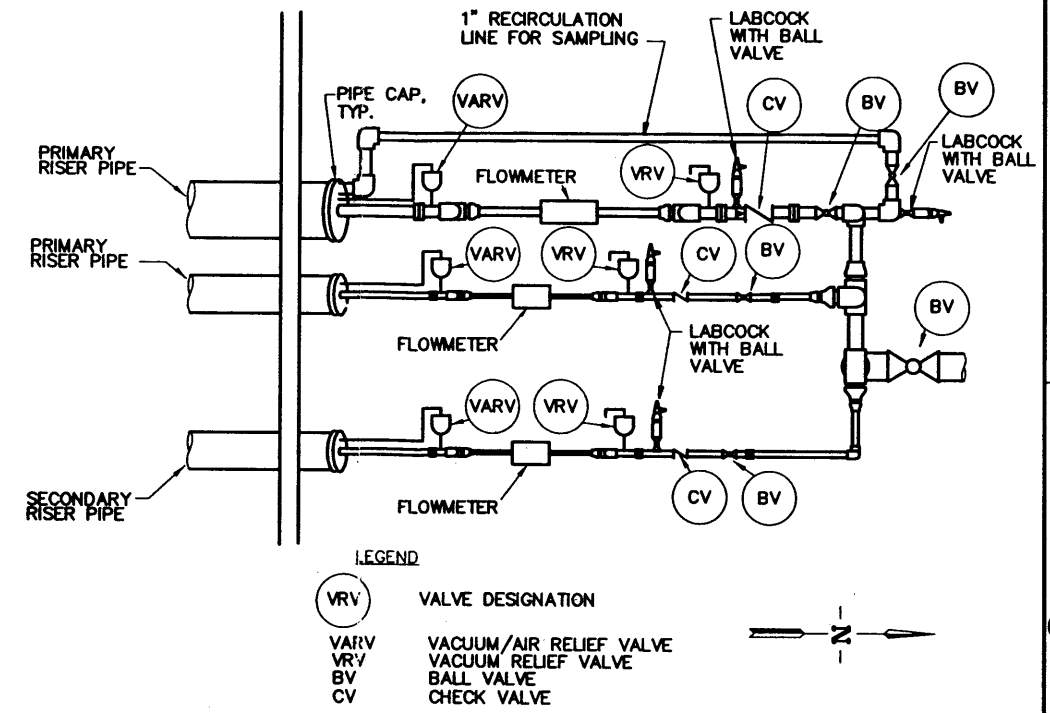

LANDFILL CREST PAD PIPING PLAN (1)
NTS

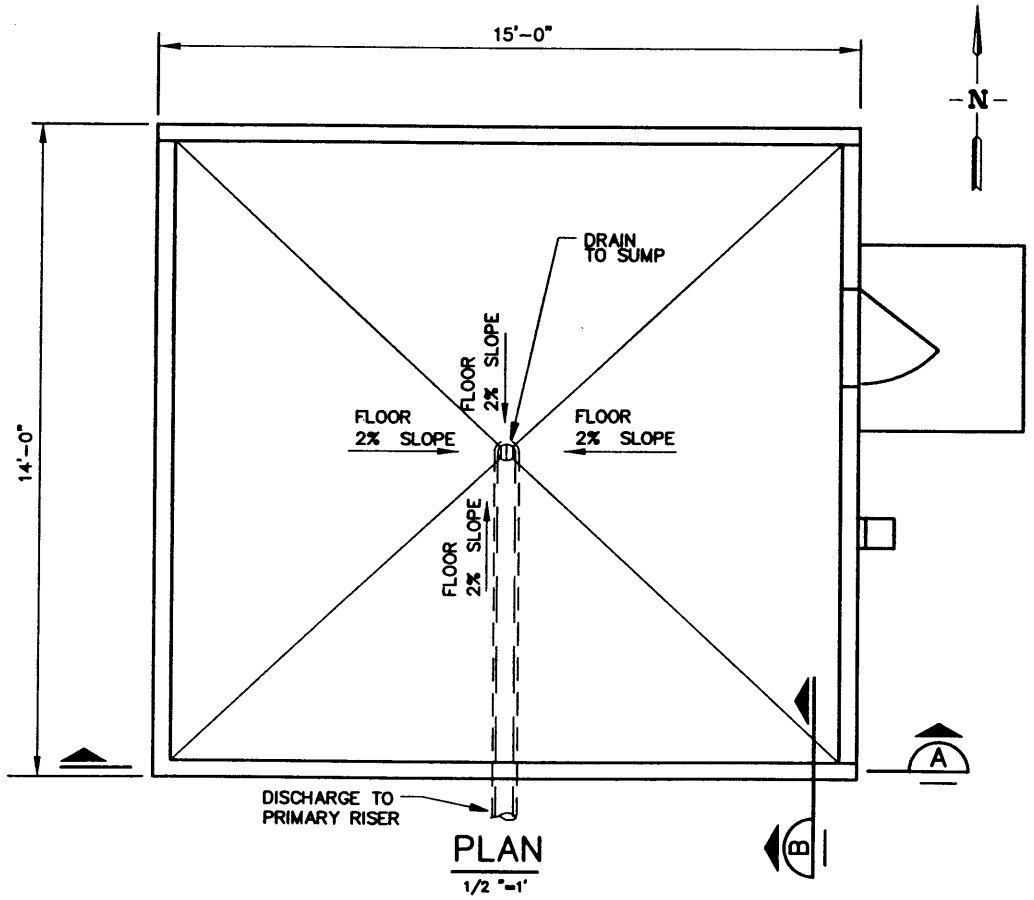

PLAN
1/2 "=1'

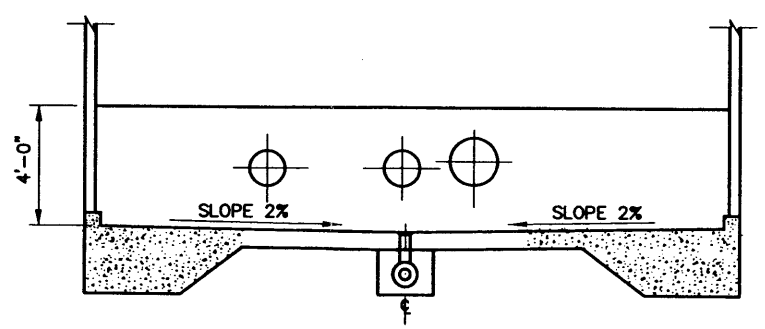

SECTION (A)
NTS

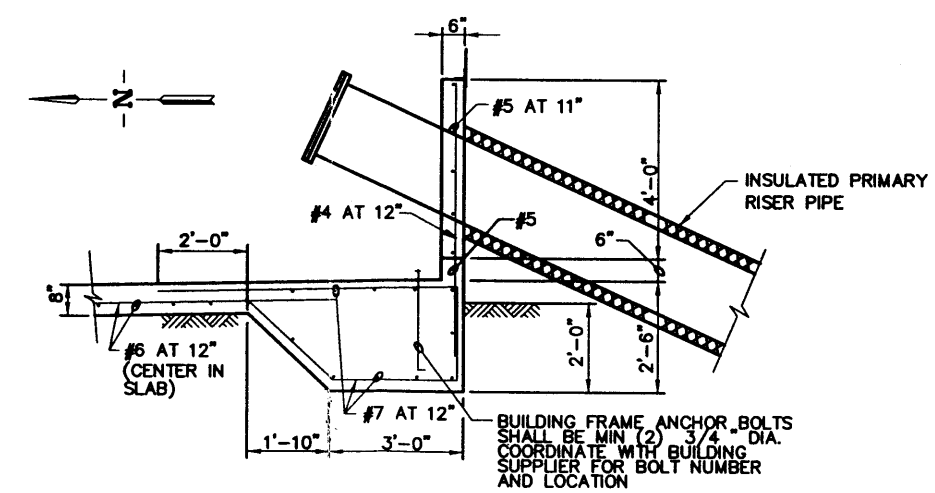

SECTION (B)
NTS

PRELIMINARY NOT FOR CONSTRUCTION

INEEL (Idaho National Engineering & Environmental Laboratory) BECHTEL BWXT IDAHO, LLC

CH2MHILL

INEEL CERCLA DISPOSAL FACILITY (ICDF)

CREST PAD BUILDING
PLAN AND ELEVATIONS

SUBCONTRACT NO.	S01-588058
REQUESTER:	
DESIGN:	T KRAEMER
DRAWN:	V AHRNKIEL
PROJECT NO.	
SPEC CODE	
FOR REVIEW/APPROVAL SIGNATURES SEE DAR NO.	DAR
EFFECTIVE DATE:	

SIZE	CAGE CODE	INDEX CODE NUMBER				DWG-	REV
		AREA	TYPE	CL	ORG		
D		B21	0600	60		A/S-201	0

SCALE: AS SHOWN CPP SHEET 1 OF 1

REVISIONS		
REV	DESCRIPTION	EFFECTIVE DATE:
0	TITLE I DESIGN	9 JULY 2001

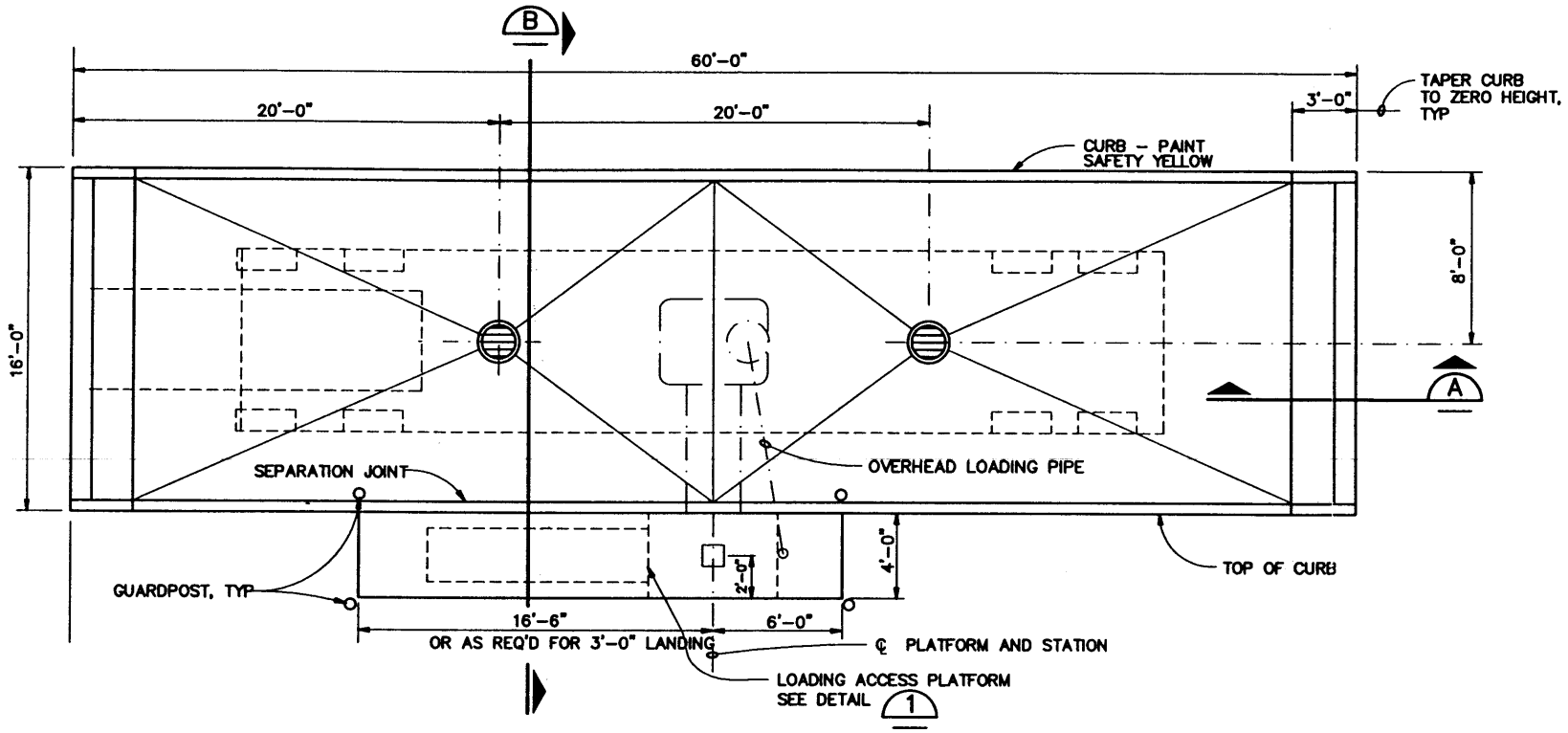

TRUCK LOADING STATION FOUNDATION PLAN (1)

NTS

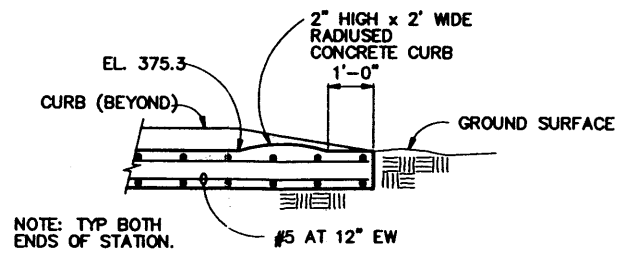

SECTION (A)

3/8 " = 1'-0"

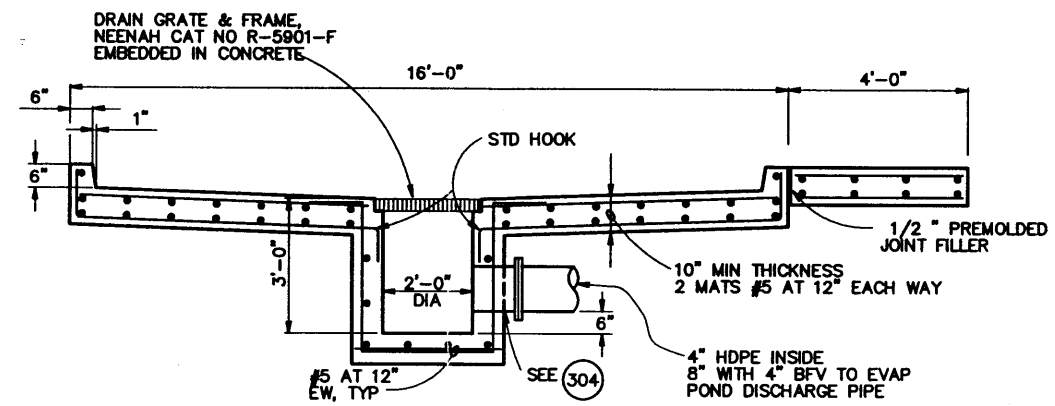

SECTION (B)

3/8 " = 1'-0"

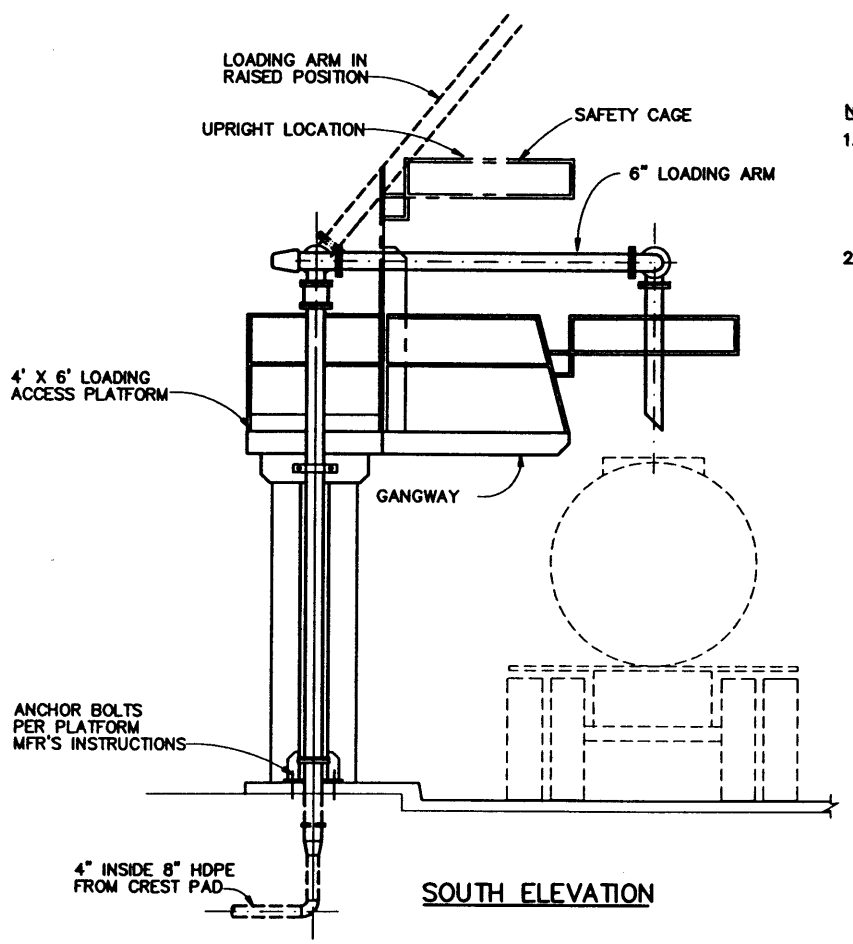

SOUTH ELEVATION

NOTES

1. LOADING ACCESS PLATFORM: ALL GALVANIZED STEEL CONSTRUCTION WITH PEDESTAL SUPPORTED PLATFORM, STAIR, 6-FOOT NOMINAL LENGTH GANGWAY, SAFETY CAGE, AND OSHA APPROVED RAILINGS. GRIP-STRUT WALKING SURFACES. DIMENSIONS AS SHOWN ON THE DRAWINGS. MANUFACTURER: CARBIS SALES, OR EQUAL.
2. LOADING ARM: 6-INCH SELF-BALANCING SWIVEL TYPE LOADING ARM DESIGNED FOR TRUCK FILLING, 10 FOOT REACH, STAINLESS STEEL CONSTRUCTION. FLANGE MOUNTED HORIZONTAL SWIVEL JOINT, TORSION SPRING BALANCE WITH LOCK DOWN FEATURE, DROP TUBE SWIVEL, AND 4-FOOT DROP TUBE. OPW MODEL J32F, OR EQUAL.

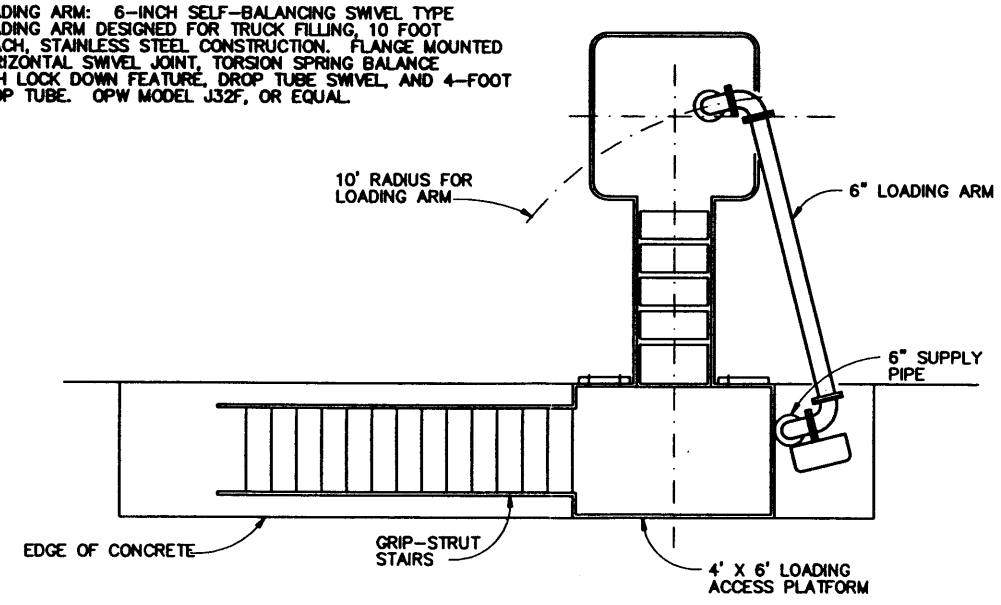

PLAN

LOADING ACCESS PLATFORM DETAIL (1)

3/8 " = 1'-0"

PRELIMINARY NOT FOR CONSTRUCTION

INEEL Idaho National Engineering & Environmental Laboratory BECHTEL BWXT IDAHO, LLC

CH2MHILL

INEEL CERCLA DISPOSAL FACILITY (ICDF)

TRUCK LOADING PLAN
SECTIONS AND DETAILS

SUBCONTRACT NO.	S01-588058
REQUESTER:	
DESIGN:	T KRAMER
DRAWN:	V AHRNKIEL
PROJECT NO.	
SPEC CODE	
FOR REVIEW/APPROVAL SIGNATURES SEE DAR NO.	DAR
EFFECTIVE DATE:	

SIZE	CAGE CODE	INDEX CODE NUMBER: AREA	TYPE	CL	ORG	DWG	REV
D		B21	0600	02		A/S-203	0
SCALE: AS SHOWN					CPP	SHEET 1 OF 1	

REVISIONS		
REV	DESCRIPTION	EFFECTIVE DATE:
0	TITLE I DESIGN	9 JULY 2001

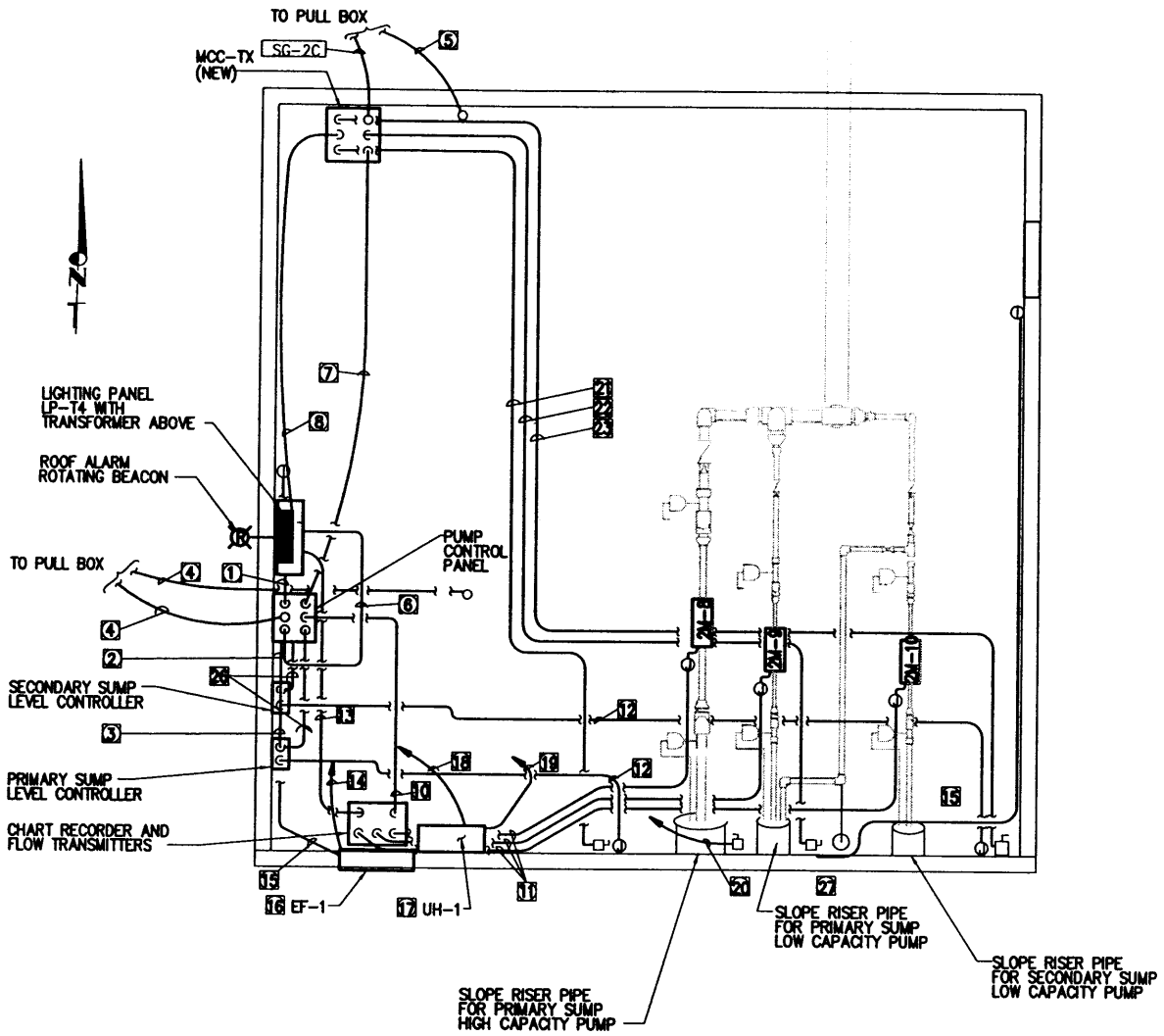

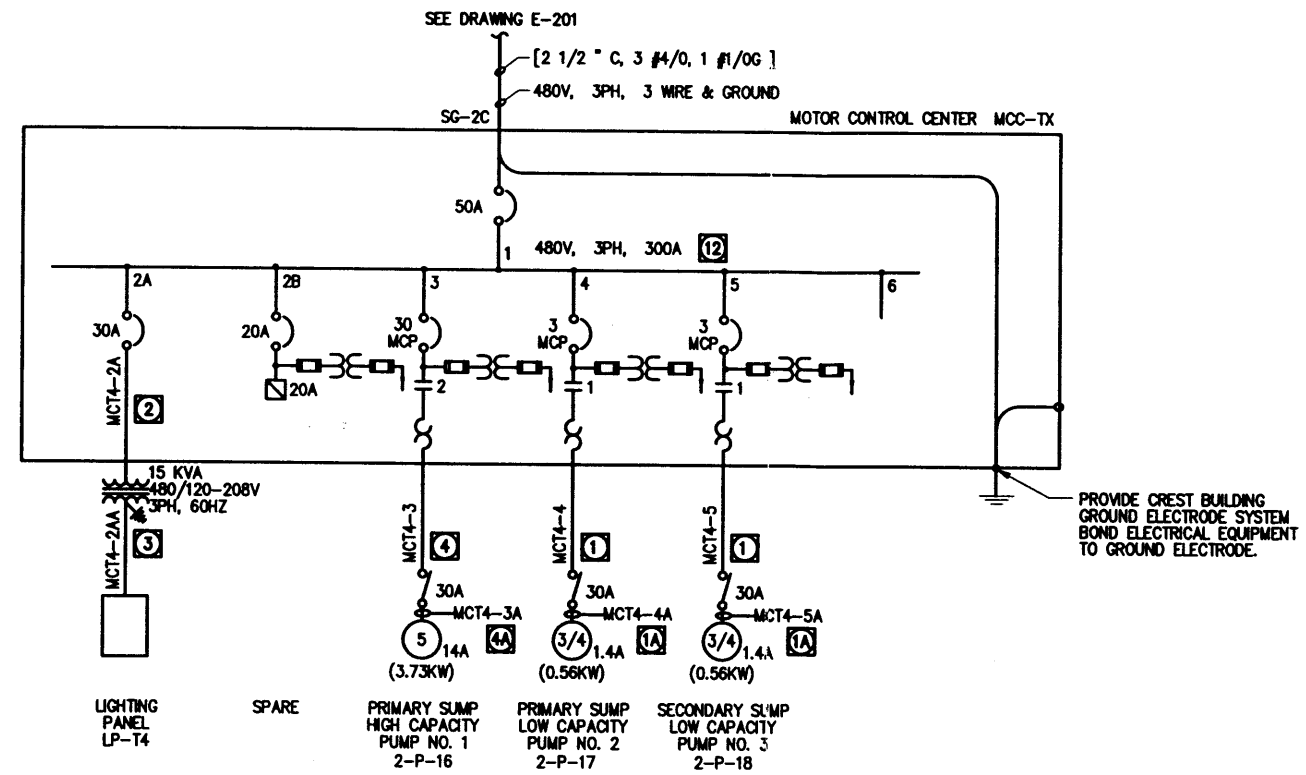

ONE LINE DIAGRAM

MOTOR CONTROL CENTER MCC-TX
LANDFILL CREST PAD

1. 3/4"C, 2#12, 1#12G
2. 1"C, 2-2/C #16
3. 1"C, 1-2/C #16
4. 2" C.O.
5. 2" C.O.
6. 3/4"C, 2#12, 1#12G
7. 1"C, 20 #14, 1#14GRD
8. MCT4-2A
9. NOT USED
10. 2"C, 3-2/C #16 SHLD
11. 3/4"C, 2/C #16 SHLD
12. 1"C, VENDOR CABLE
13. 1"C, 4#12, 1#12G
14. 3/4"C, 2#12, 1#12G
15. 3/4"C, 2#12, 1#12G
16. 1/2HP 120VAC 1 PHASE PROP (TYPE 2) EXHAUST FAN.
17. 3 KW UNIT HEATER 120 VAC 1 PHASE (TYPE 2).
18. 3/4"C, 3#12, 1#12G
19. 3/4"C, 2#12, 1#12G
20. 3/4"C, 3#12, 1#12G
21. MCT4-3
22. MCT4-4
23. MCT4-5
24. NOT USED
25. FIELD ROUTE ALL CONDUIT ON WALLS.
26. 3/4"C, 2#12, 1#12G
27. CONNECT EF-2 TO CIRCUIT NUMBER 16 IN LP-T4 AND EF-1 TO CIRCUIT NUMBER 12 IN LP-T4

1. 3/4"C, 3#12, 1#12G
2. 3/4" C, 3#10, 1#10G
3. 1" C, 4#8, 1#8G
4. 3/4" C, 3#10, 1#10G
5. NOT USED
12. 42,000 AMP MINIMUM RMS SHORT CIRCUIT BUS BRACING RATING. BREAKERS TO HAVE 25,000 AMP MINIMUM INTERRUPTING CAPACITY
14. SEE DRAWING E-201 FOR CONDUIT AND CONDUCTORS TO LIGHTS
1A. 4 # 14AWG. VENDOR SUPPLIED
4A. 4 # 12AWG. VENDOR SUPPLIED

PRELIMINARY NOT FOR CONSTRUCTION

INEEL (Idaho National Engineering & Environmental Laboratory) BECHTEL BWXT IDAHO, LLC

CH2MHILL

INEEL CERCLA DISPOSAL FACILITY (ICDF)

LANDFILL CREST PAD BUILDING ELECTRICAL SCHEDULES AND ONE-LINE DIAGRAMS

SUBCONTRACT NO.	S01-588058
REQUESTER:	
DESIGN:	T KRAMER
DRAWN:	V MAXEY-SUHR
PROJECT NO.	
SPEC CODE	
FOR REVIEW/APPROVAL SIGNATURES SEE DAR NO.	DAR
EFFECTIVE DATE:	

SIZE	CAGE CODE	INDEX CODE NUMBER AREA	TYPE	CL	ORG	DWG-	REV
D		B21	0400	10		E-202	0

SCALE: AS SHOWN | CPP | SHEET 1 OF 1

REVISIONS		
REV	DESCRIPTION	EFFECTIVE DATE:
0	TITLE I DESIGN	9 JULY 2001

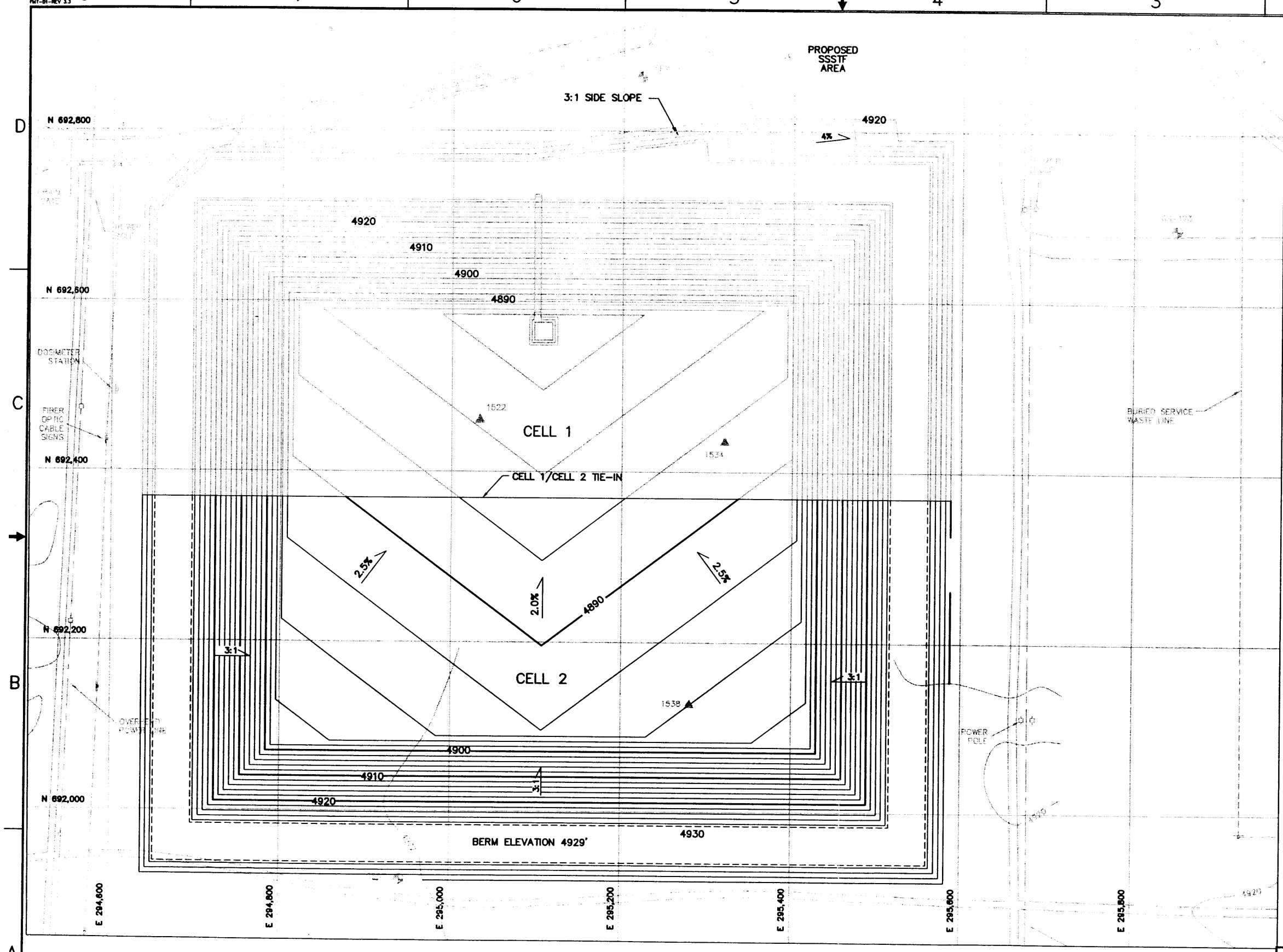

NOTES:

1. GRADES SHOWN ARE TOP OF SUBGRADE.

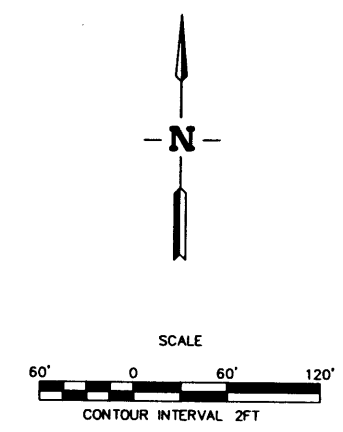

PRELIMINARY NOT FOR CONSTRUCTION

INEEL

CH2MHILL MONTGOMERY WATSON

INEEL CERCLA DISPOSAL FACILITY (ICDF)

CELL 2
EXCAVATION PLAN

SUBCONTRACT NO.	S01-588058
REQUESTER:	
DESIGN:	PHILLIP CROUSE
DRAWN:	JANET BEVER
PROJECT NO.	
SPEC CODE	
FOR REVIEW/APPROVAL SIGNATURES SEE DAR NO.	DAR
EFFECTIVE DATE:	

SIZE	CAGE CODE	NUCK CODE NUMBER (AREA / TYPE / CL / ORG)	DWG-	REV
D		B21 / 0500 / 02	C-301	0
SCALE: AS SHOWN		CPP	SHEET 1 OF 1	

REVISIONS		
REV	DESCRIPTION	EFFECTIVE DATE:
0	TITLE I DESIGN	9 JULY 2001

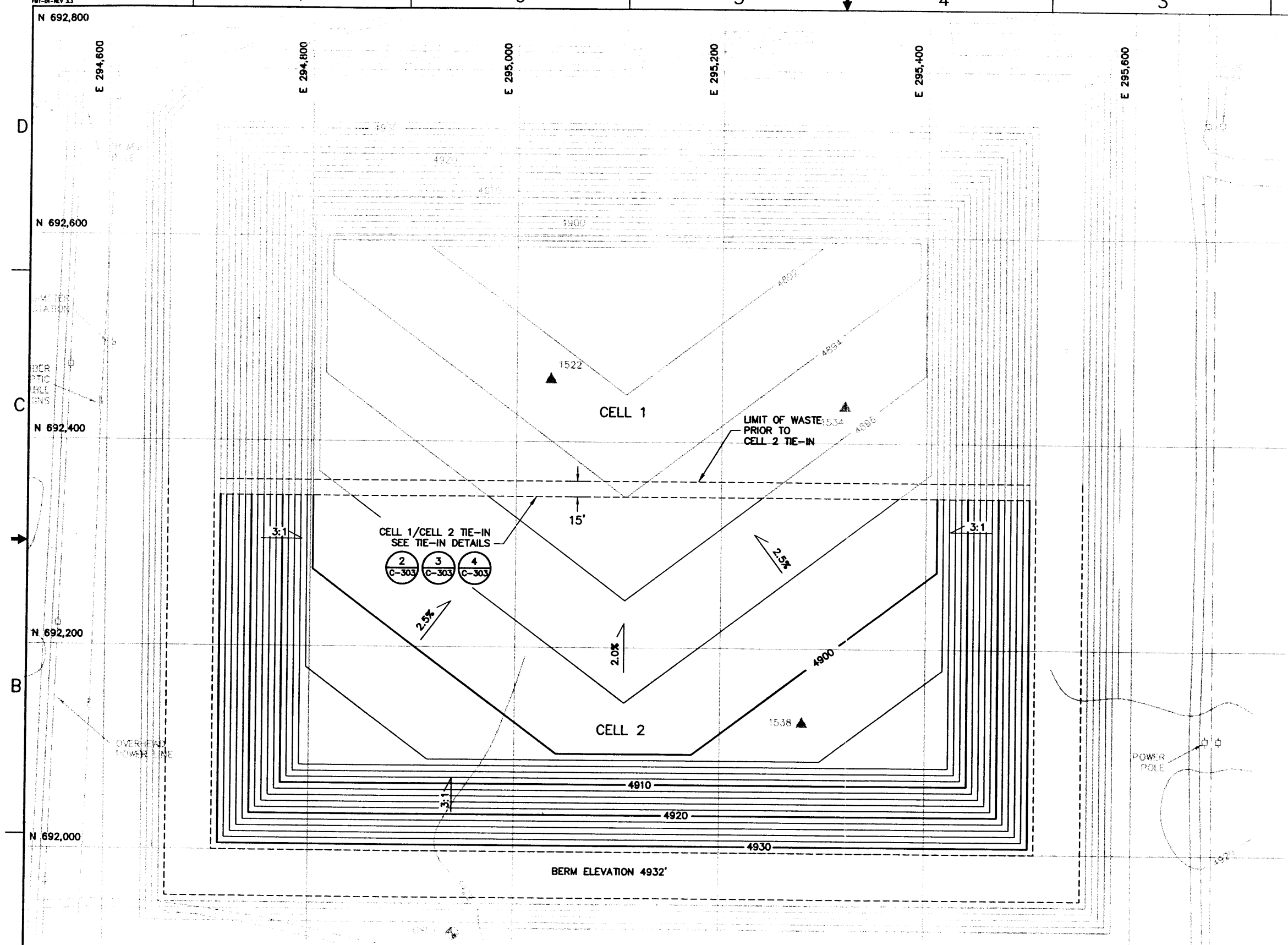

NOTE:

GRADES SHOWN ARE TO TOP OF OPERATIONS LAYER.

N

SCALE

50' 0 50' 100'

CONTOUR INTERVAL 2FT

PRELIMINARY NOT FOR CONSTRUCTION

INEEL Idaho National Engineering & Environmental Laboratory BECHTEL BWXT IDAHO, LLC

CH2MHILL MONTGOMERY WATSON

INEEL CERCLA DISPOSAL FACILITY (ICDF)

CELL 2
FINAL GRADING PLAN

SUBCONTRACT NO.	S01-588058
REQUESTER:	
DESIGN:	PHILLIP CROUSE
DRAWN:	JANET BEYER
PROJECT NO.	
SPEC CODE	
FOR REVIEW/APPROVAL SIGNATURES SEE DAR NO.	DAR
EFFECTIVE DATE:	

SIZE	CAGE CODE	INDEX CODE NUMBER: AREA	TYPE	CL	ORG	DWG-	REV
D		B21	0500	02		C-302	0
SCALE: AS SHOWN					CPP	SHEET 1 OF 1	

REVISIONS		
REV	DESCRIPTION	EFFECTIVE DATE:
0	TITLE I DESIGN	9 JULY 2001

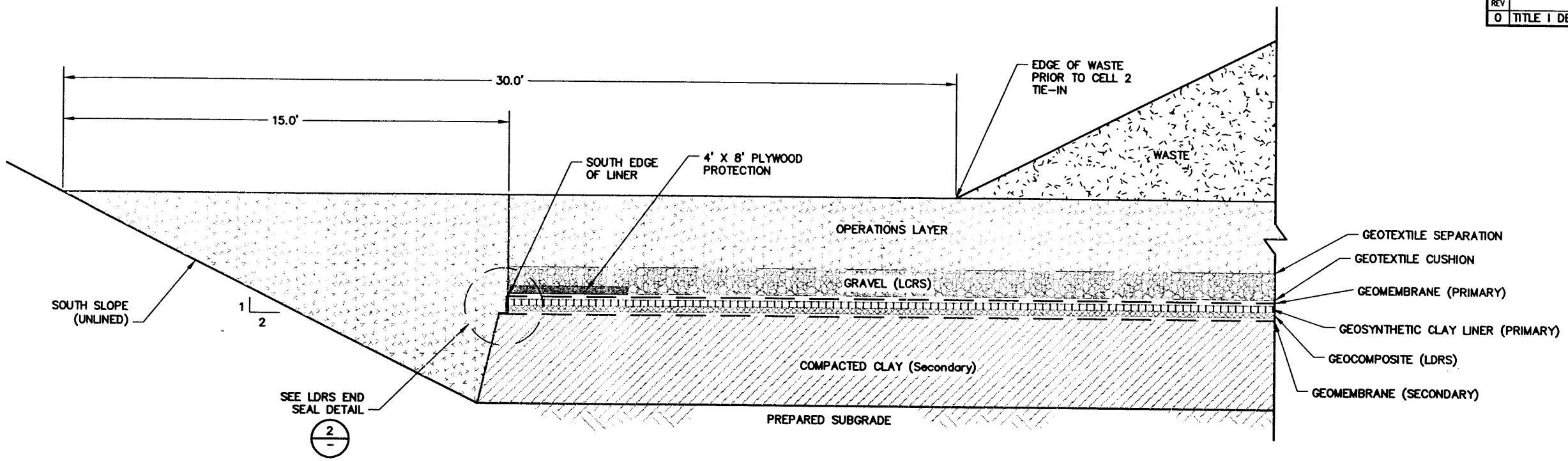

4 C-302 CELL 1 SOUTH LINER EDGE TERMINATION DETAIL
SCALE: NONE

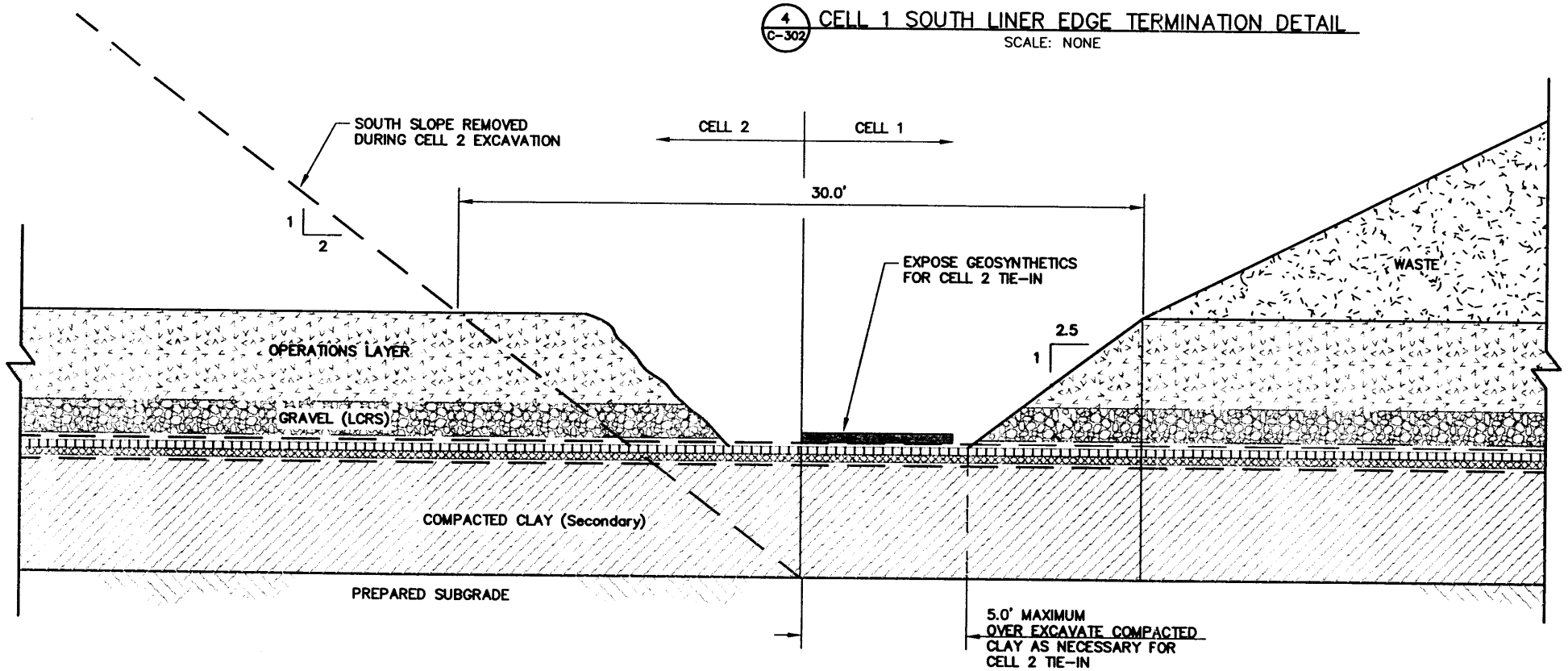

3 C-302 CELL 1 / CELL 2 TIE-IN DETAIL
SCALE: NONE

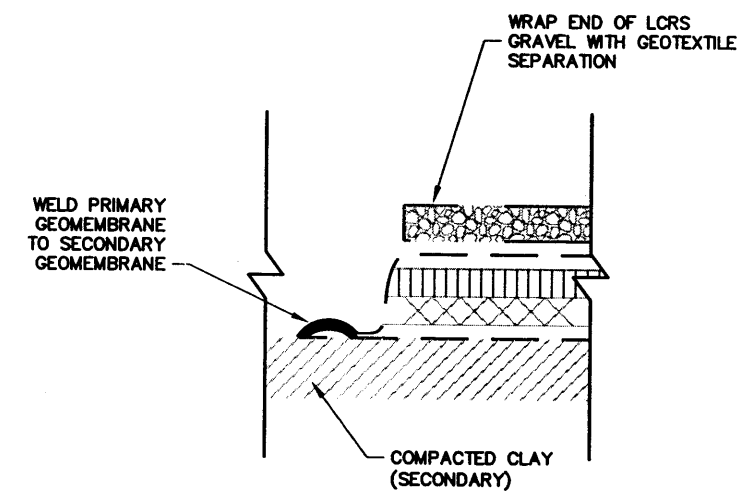

2 C-302 LDRS END SEAL DETAIL
SCALE: NONE

PRELIMINARY NOT FOR CONSTRUCTION

INEEL (Idaho National Engineering & Environmental Laboratory) BECHTEL BWXT IDAHO, LLC

CH2MHILL MONTGOMERY WATSON

INEEL CERCLA DISPOSAL FACILITY (ICDF)

CELL 2 SECTIONS AND DETAILS

SUBCONTRACT NO.	S01-588058
REQUESTER:	
DESIGN:	PHILLIP CROUSE
DRAWN:	JANET BEVER
PROJECT NO.	
SPEC CODE	
FOR REVIEW/APPROVAL SIGNATURES SEE DAR NO.	DAR
EFFECTIVE DATE:	

SIZE	CAGE CODE	INDEX CODE NUMBER AREA	TYPE	CL	ORG	DWG-	REV
D		B21	0100	02		C-303	0

SCALE: AS SHOWN CPP SHEET 1 OF 1

REVISIONS		
REV	DESCRIPTION	EFFECTIVE DATE:
0	TITLE I DESIGN	9 JULY 2001

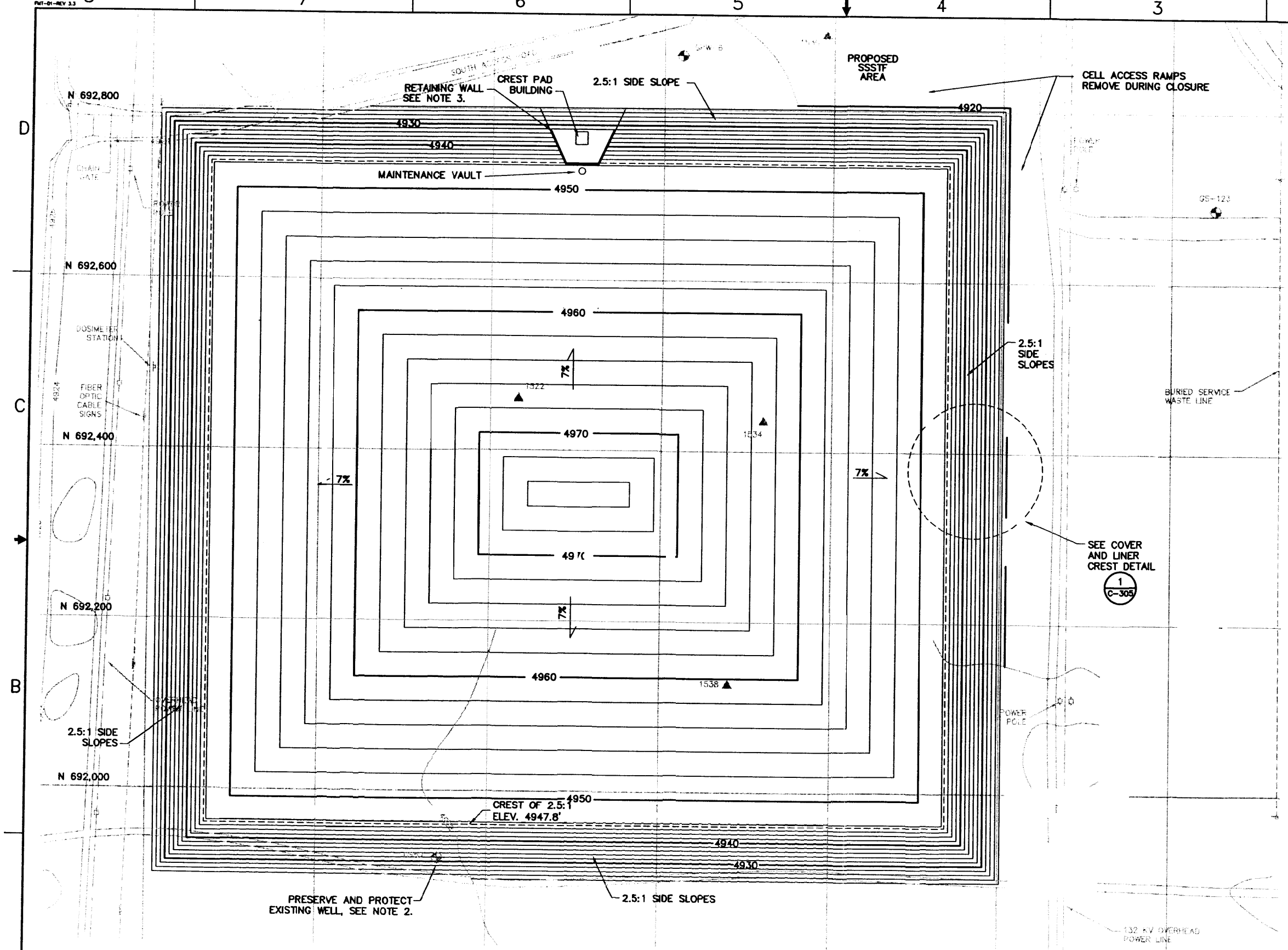

NOTES:

1. GRADES SHOWN ARE TOP OF FINAL COVER.
2. WELL USGS-57 IS LOCATED OUTSIDE OF THE CELL 2 PERIMETER EMBANKMENT, BUT FALLS WITHIN THE RIP RAP ARMOR OF THE COVER. EXTEND WELL AND PROTECTIVE CASING THROUGH RIP RAP TO PRESERVE AND PROTECT WELL AND ALLOW CONTINUED ACCESS FOR MONITORING.
3. PROVIDE ROCKERY RETANING WALL TO PROTECT EXISTING LANDFILL CREST PAD BUILDING DURING POST-CLOSURE OPERATION OF LEACHATE COLLECTION SYSTEM. ONCE LRCS OPERATION IS NO LONGER NECESSARY, WALL CAN BE REMOVED AND COVER SECTION CAN BE PLACED. ACCESS TO LEACHATE PIPING WOULD THEN BE PROVIDED BY MANTENANCE VAULT.

PRELIMINARY NOT FOR CONSTRUCTION

INEEL — Idaho National Engineering & Environmental Laboratory, BECHTEL BWXT IDAHO, LLC

CH2MHILL — MONTGOMERY WATSON

INEEL CERCLA DISPOSAL FACILITY (ICDF)

CELL 1 AND CELL 2
FINAL COVER PLAN

SUBCONTRACT NO.	S01-588058
REQUESTER:	
DESIGN:	PHILLIP CROUSE
DRAWN:	JANET BEVER
PROJECT NO.	
SPEC CODE	
FOR REVIEW/APPROVAL SIGNATURES SEE DAR NO.	DAR
EFFECTIVE DATE:	

SIZE	CAGE CODE	INDEX CODE NUMBER (AREA / TYPE / CL / ORIG)	DWG-	REV
D		B21 / 0500 / 02	C-304	0

SCALE: AS SHOWN — CPP — SHEET 1 OF 1

REVISIONS		
REV	DESCRIPTION	EFFECTIVE DATE:
0	TITLE I DESIGN	9 JULY 2001

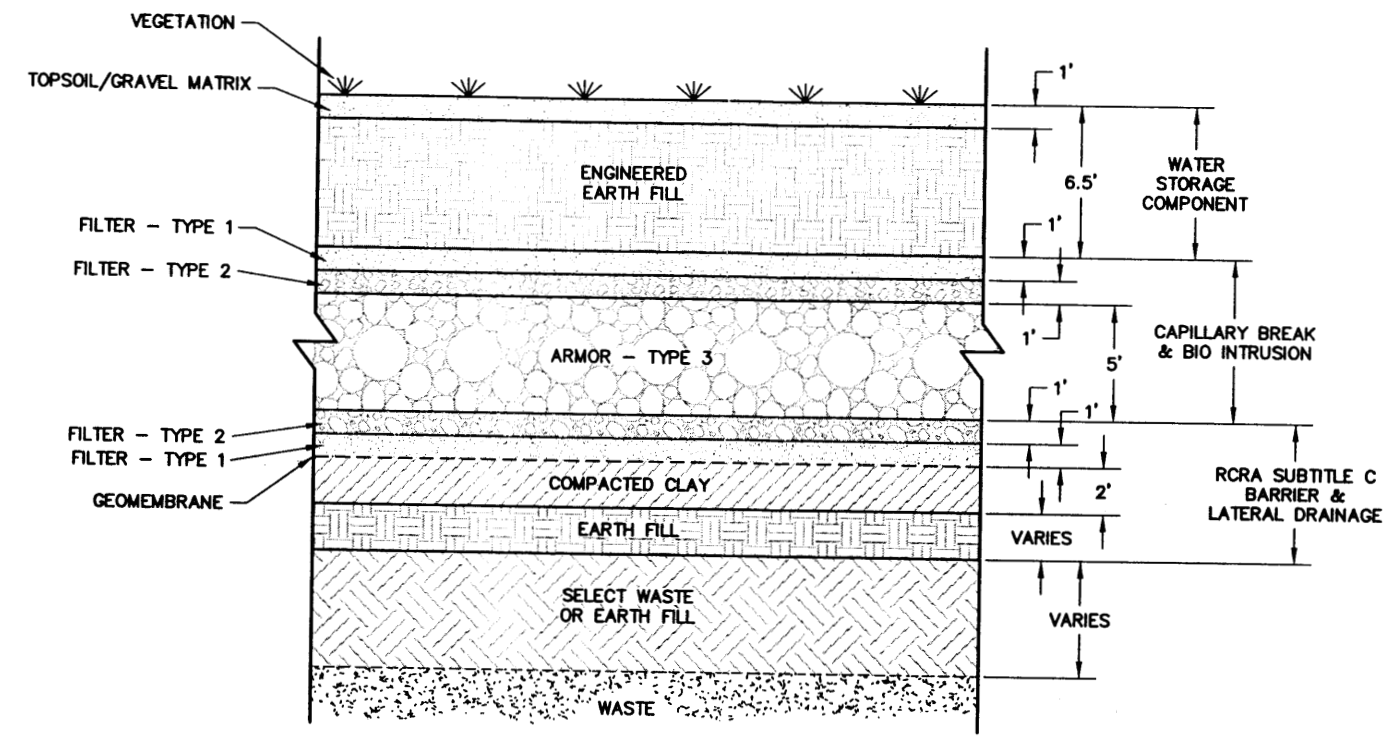

2 / C-305 TYPICAL COVER DETAIL

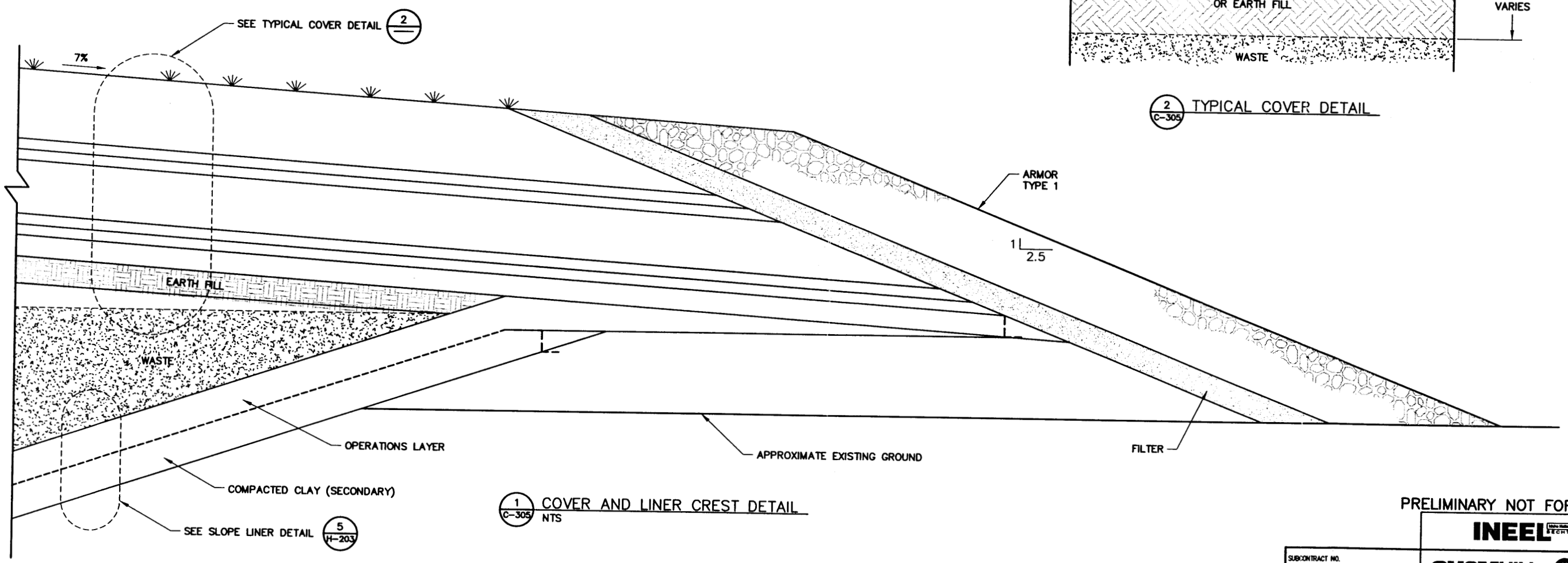

1 / C-305 COVER AND LINER CREST DETAIL
NTS

PRELIMINARY NOT FOR CONSTRUCTION

INEEL (Idaho National Engineering & Environmental Laboratory) BECHTEL BWXT IDAHO, LLC

CH2MHILL MONTGOMERY WATSON

INEEL CERCLA DISPOSAL FACILITY (ICDF)

FINAL COVER
SECTIONS AND DETAILS

SUBCONTRACT NO.	S01-588058
REQUESTER:	
DESIGN:	PHILLIP CROUSE
DRAWN:	JANET BEVER
PROJECT NO.	
SPEC CODE	
FOR REVIEW/APPROVAL SIGNATURES SEE DAR NO.	DAR
EFFECTIVE DATE:	

SIZE	CAGE CODE	INDEX CODE NUMBER AREA	TYPE	CL	ORIG	DWG-	REV
D		B21	0100	02		C-305	0

SCALE: AS SHOWN CPP SHEET 1 OF 1